WINKLER STIEFEL
Kompressoren • Hydraulik • Pneumatik

ASIC 'Performer'

Pressure Transducers and Transmitters

20, 60, 100, 250, 400 and 700 bar

Global Filtration Technology

APPLICATIONS FOR THE ASIC PERFORMER

- Fork lift trucks - braking and load systems.
- Truck mounted cranes - load safety systems.
- Earth moving machinery - hydraulic gearbox control.
- Racing car - gearbox, fuel, cooling and suspension systems.
- Earth moving machinery - hydraulic gearbox control.
- Water usage systems - pressurised systems for industrial and hi-rise usage.
- Forest Machinery - felling and logging.
- Paper mills - speed control and weighing systems.

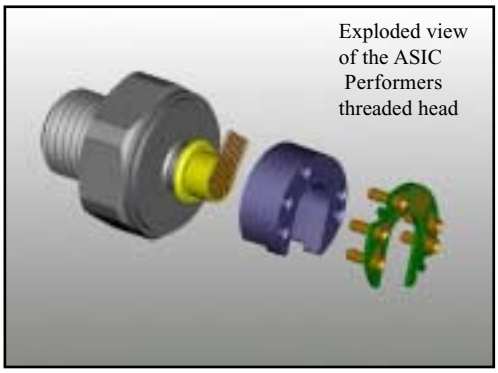

Exploded view of the ASIC Performers threaded head

The Parker Filtration ASIC Performer Pressure Transducers and Transmitters.

To overcome the historical problems caused by "gauge creep" of thick film sensors and the fragility of peizo-electric/ceramic based sensors, the new 'Performer' range uses a high-grade Stainless Steel element, which is coated with layers of both insulative and alloy materials. These are trimmed to a very close tolerance using state of the art, semiconductor grade, laser and lon beam methods. This extremely accurate "front end" is then coupled with Application Specific Integrated Circuitry (ASIC) to produce a sensor that is both accurate and repeatable over a wide, fully compensated, temperature range, -40°C to +125°C. The "Performer" is now available in a variety of thread-form and connector options.

This new design offers a high stability, very low drift device, which can operate over a wide thermal range. Powered from an extended working supply range (9-35vdc {PTD} and 11-35vdc {PTX}).

In addition to the standard 6 pressure ranges available, using the ASIC technology (Application Specific Integrated Circuit) programmable software, any variation can be manufactured. Consult Parker for any additional information.

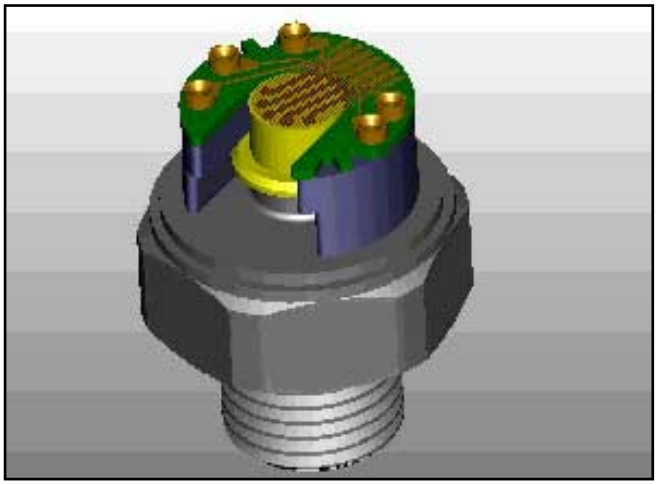

A comprehensive range of Pressure Transducers and Transmitters are available from Parker Filtration.

- One-piece body and diaphragm machining ensures long-term product stability.
- All Stainless Steel construction.
- 6 Transducer pressure ratings, 0-5V and 1-6V outputs.
- 6 Transmitter pressure ratings - 2-wire 4-20mA output.
- Micro plug and M12 connector options.

SPECIFICATION

Pressure ranges:
20, 60, 100, 250, 400, 700 Bar.

Minimum over pressure:
Rated pressure times 1.5min

Minimum burst pressure:
Rated pressure times 6 min

Vibration:
>50g

Installation:
Spanner size 22A/F.

Max. (recommended) tightening torque = 30Nm

THREAD FORM OPTIONS

G1/4 (1/4BSP) for bonded seal

G1/4 (1/4BSP) with integral seal

M12 x 1.5-6g

7/16 UNF (37° Flare to SAE J514, size 4)

9/16 UNF (37° Flare to SAE J514, size 6)

NPTF1/4 (ANSI B1.20 3-1976)

NPTF1/8 (ANSI B1.20 3-1976)

All thread forms and sensor interface are made from17-4PH Stainless Steel

ELECTRICAL

Supply voltage	Output
9 - 35v DC	0 - 5v
9 - 35v DC	1 - 6v
11- 35v DC	4 - 20mA

Transducer current draw = 8mA

LINEARITY, HYSTERESIS, REPEATABILITY, RESPONSE AND TEMPERATURE

Linearity:
(over any 80°C temp range)
<+/-0.05%

Hysteresis:
(over any 80°C temp range)
<+/-0.05% Full Scale

Repeatability:
(over any 80°C temp range)
<+/-0.05% Full Scale

Functional Temp Range:
-40°C to +125°C

Temperature error:
(over any 80˚C temp range)
<1%

Stability:
<0.1%FS after 1m Cycles

Response Time:
<1mS

WIRING INFORMATION

Micro DIN Option

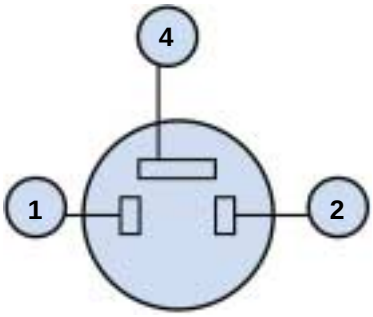

Micro DIN Option		
Pin Number	**Transmitter**	**Transducer**
1	N/A	Signal Output
2	Supply +ve	Supply +ve
4	Return	Supply Ref (0v)

M12 Option

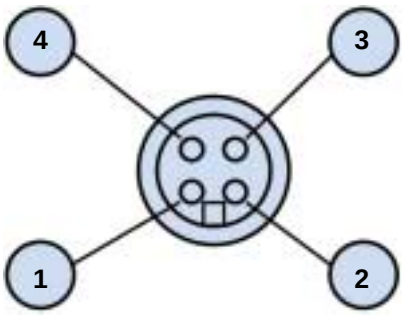

M12 Option		
Pin Number	**Transmitter**	**Transducer**
1	Supply +ve	Supply +ve
2	N/A	Output
3	Return	Supply Ref (0v)
4	N/A	Not Used

INSTALLATION DETAILS

Micro DIN option

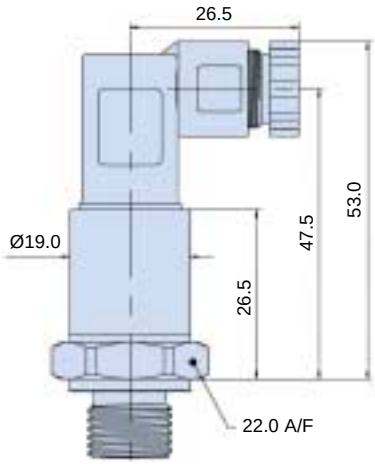

M12 option

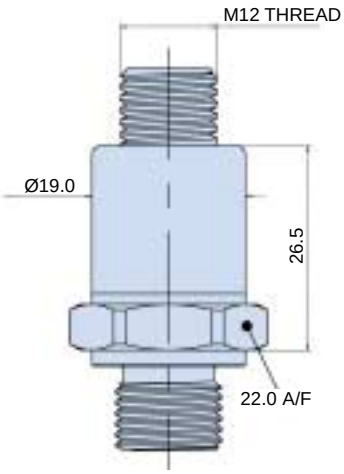

Flying lead option

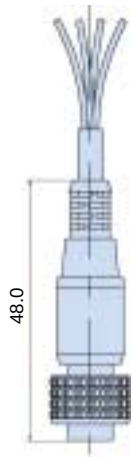

PREFERRED PRODUCTS TABLE

Pressure Transducers	
Part Number	**Description**
PTD.SB0201A1C1	0-20 bar transducer. (G1/4" BSP) 1-6Vdc output. Micro DIN option.
PTD.SB0601A1C1	0-60 bar transducer. (G1/4" BSP) 1-6Vdc output. Micro DIN option.
PTD.SB1001A1C1	0-100 bar transducer. (G1/4" BSP) 1-6Vdc output. Micro DIN option.
PTD.SB2501A1C1	0-250 bar transducer. (G1/4" BSP) 1-6Vdc output. Micro DIN option.
PTD.SB4001A1C1	0-400 bar transducer. (G1/4" BSP) 1-6Vdc output. Micro DIN option.
PTD.SB7001A1C1	0-700 bar transducer. (G1/4" BSP) 1-6Vdc output. Micro DIN option.
PTD.SB0201A1C2	0-20 bar transducer. (G1/4" BSP) 1-6Vdc output. M12 Option.
PTD.SB0601A1C2	0-60 bar transducer. (G1/4" BSP) 1-6Vdc output. M12 Option.
PTD.SB1001A1C2	0-100 bar transducer. (G1/4" BSP) 1-6Vdc output. M12 Option.
PTD.SB2501A1C2	0-250 bar transducer. (G1/4" BSP) 1-6Vdc output. M12 Option.
PTD.SB4001A1C2	0-400 bar transducer. (G1/4" BSP) 1-6Vdc output. M12 Option.
PTD.SB7001A1C2	0-700 bar transducer. (G1/4" BSP) 1-6Vdc output. M12 Option.

Pressure Transmitters	
Part Number	**Description**
PTX.B0201A1C1	0-20 bar transmitter. (G1/4" BSP) 4-20mA. Micro DIN option.
PTX.B0601A1C1	0-60 bar transmitter. (G1/4" BSP) 4-20mA. Micro DIN option.
PTX.B1001A1C1	0-100 bar transmitter. (G1/4" BSP) 4-20mA. Micro DIN option.
PTX.B2501A1C1	0-250 bar transmitter. (G1/4" BSP) 4-20mA. Micro DIN option.
PTX.B4001A1C1	0-400 bar transmitter. (G1/4" BSP) 4-20mA. Micro DIN option.
PTX.B7001A1C1	0-700 bar transmitter. (G1/4" BSP) 4-20mA. Micro DIN option.
PTX.B0201A1C2	0-20 bar transmitter. (G1/4" BSP) 4-20mA. M12 option.
PTX.B0601A1C2	0-60 bar transmitter. (G1/4" BSP) 4-20mA. M12 option.
PTX.B1001A1C2	0-100 bar transmitter. (G1/4" BSP) 4-20mA. M12 option.
PTX.B2501A1C2	0-250 bar transmitter. (G1/4" BSP) 4-20mA. M12 option.
PTX.B4001A1C2	0-400 bar transmitter. (G1/4" BSP) 4-20mA. M12 option.
PTX.B7001A1C2	0-700 bar transmitter. (G1/4" BSP) 4-20mA. M12 option.

Note 1: For a flying lead assembly, select the appropriate M12 option above and add a suitable cable from the "Associated Products" options below.

Example: PTX.B2501A1C2 + P.833PVC-2M = A 250 bar 4-20mA Transmitter, G1/4 for bonded seal, M12 connector with 2m PVC flying lead.

Note 2: Integral Thread options are also available in the above ranges.

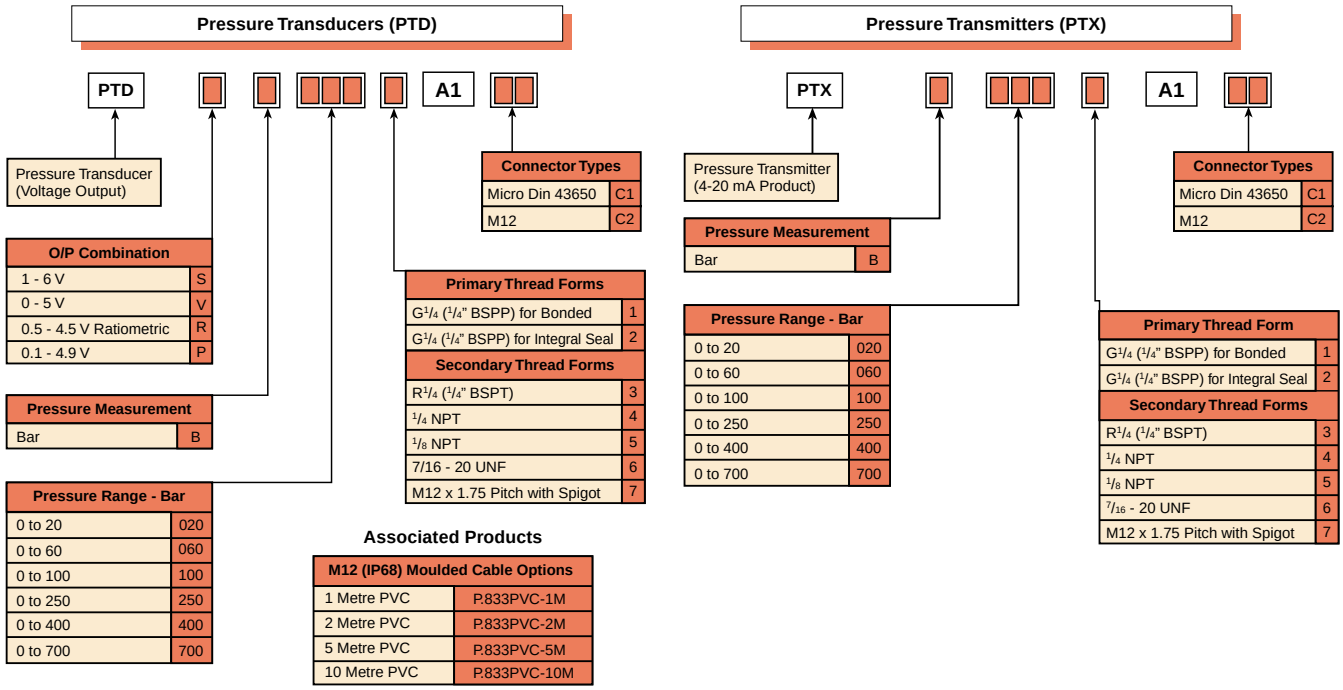

For more information: Contact Parker Filtration's Condition Monitoring Centre: Tel: +44 (0) 1842 763299.
Fax: +44 (0) 1842 756300. Email: fluidpower@ucc.co.uk

Artikel-Nummer	Artikel-Nummer	Artikel-Nummer	Artikel-Nummer
50	E121K4503-2995-483510S6	25SBKK06MPX	P1S-S020DS-0025
60	E121K4503-2995-483510S6	25SBKK08MPN	P1S-S020DS-0025
101	E121K4503-2995-492425A2	25SBKK08MPX	P1S-S020DS-0040
101	E121K4503-2995-492425A2	25SBKK10MPN	P1S-S020DS-0040
120	E121K4503-2995-492425C2	25SBKK10MPX	P1S-S020DS-0050
120	E121K4503-2995-492425C2	25SBKK12MPN	P1S-S020DS-0050
130	E121K4503-2995-492425F4	25SBKK12MPX	P1S-S020DS-0115
130	E121K4503-2995-492425F4	25SBKO06MPN	P1S-S020DS-0115
131	E121K4503-4270-486265A2	25SBKO06MPX	P1S-S020DS-0125
131	E121K4503-4270-486265A2	25SBKO06RVX	P1S-S020DS-0125
139	E121K4503-4270-486265C1	25SBKO08EVX	P1S-S020DS-0160
139	E121K4503-4270-486265C1	25SBKO08MPN	P1S-S020DS-0160
150	E121K45-299503-491514C2	25SBKO08MPX	P1S-S020DS-0200
150	E121K45-299503-491514C2	25SBKO08RVX	P1S-S020DS-0200
160	E121K45-2995-4818653D	25SBKO10MPN	P1S-S020DS-0320
161	E121K45-2995-4818653D	25SBKO10MPX	P1S-S020DS-0320
250	E121K45-2995-481865C1	25SBKO10RVX	P1S-S020MS-0025
250	E121K45-2995-481865C1	25SBKO12EVX	P1S-S020MS-0025
276	E121K45-2995-481865C2	25SBKO12MPN	P1S-S020MS-0080
276	E121K45-2995-481865C2	25SBKO12MPX	P1S-S020MS-0080
277	E121K45-2995-481865J3	25SBKO12RVX	P1S-S020MS-0250
277	E121K45-2995-481865J3	25SBTF06EVX	P1S-S020MS-0250
402	E121K45-2995-4827253D	25SBTF06MPN	P1S-S020MS-0365
456	E121K45-2995-4827253D	25SBTF06MPN3	P1S-S020MS-0365
458	E121K45-2995-492425C2	25SBTF06MPN6	P1S-S020MS-0530
466	E121K45-2995-492425C2	25SBTF06MPNS	P1S-S020MS-0530
475	E121K45-2995-492425F4	25SBTF06MPX	P1S-S020SS-0010
476	E121K45-2995-492425F4	25SBTF06MVX	P1S-S020SS-0010
478	E121K45-2995-4958703D	25SBTF06RVX	P1S-S020SS-0015
500	E121K45-2995-4958703D	25SBTF08EEX	P1S-S020SS-0015
500	E121K45-4270-4810006J	25SBTF08EVX	P1S-S020SS-0025
515	E121K45-4270-4810006J	25SBTF08MPN	P1S-S020SS-0025
515	E121K45-4270-481044A7	25SBTF08MPNS	P1S-S020SS-0040
526	E121K45-4270-481044A7	25SBTF08MPX	P1S-S020SS-0040
536	E121K45-4270-486265A5	25SBTF08MVN	P1S-S020SS-0050
588	E121K45-4270-486265A5	25SBTF08MVX	P1S-S020SS-0050
595	E121K45-4270-486265B7	25SBTF08RVX	P1S-S020SS-0080
600	E121K45-4270-486265B7	25SBTF09EVX	P1S-S020SS-0080
600	E121K45-4270-486265C2	25SBTF09MEN	P1S-S025DF-0010
601	E121K45-4270-486265C2	25SBTF09MPN	P1S-S025DF-0010
601	E121K45-4538-4810003D	25SBTF09MPN3	P1S-S025DF-0025
603	E121K45-4538-4810003D	25SBTF09MPX	P1S-S025DF-0025
603	E121K46	25SBTF09MPX6	P1S-S025DF-0040
606	E121K46	25SBTF09MPX8	P1S-S025DF-0040
606	E121K4603	25SBTF09MVN	P1S-S025DF-0125
709	E121K4603	25SBTF09MVN0	P1S-S025DF-0125
709	E121K4603-2995-481865C2	25SBTF09MVN3	P1S-S025DF-0200
873	E121K4603-2995-481865C2	25SBTF09MVN6	P1S-S025DF-0200
873	E121K4603-4270-486265A2	25SBTF09MVN8	P1S-S025DS-0010
874	E121K4603-4270-486265A2	25SBTF09RVX	P1S-S025DS-0010
874	E121K4603-4270-486265A7	25SBTF10EVX	P1S-S025DS-0015
1050 006/0306	E121K4603-4270-486265A7	25SBTF10MEN	P1S-S025DS-0015

1059	E121K46-2995-481865C2	25SBTF10MPN	P1S-S025DS-0020
1061	E121K46-2995-481865C2	25SBTF10MPNS	P1S-S025DS-0020
1100	E121K46-2995-483510S5	25SBTF10MPX	P1S-S025DS-0025
1100	E121K46-2995-483510S5	25SBTF10MVN	P1S-S025DS-0025
1105	E121K46-4270-481044A7	25SBTF10MVP	P1S-S025DS-0030
1232	E121K46-4270-481044A7	25SBTF10MVX6	P1S-S025DS-0030
1306	E121K46-4270-481044F4	25SBTF10RVX	P1S-S025DS-0040
1308	E121K46-4270-481044F4	25SBTF13EVX	P1S-S025DS-0040
1308	E121K46-4270-483520S6	25SBTF13MEN	P1S-S025DS-0050
001465	E121K46-4270-483520S6	25SBTF13MEX	P1S-S025DS-0050
01534	E121K46-4270-486265A7	25SBTF13MPN	P1S-S025DS-0060
1605	E121K46-4270-486265A7	25SBTF13MPN6	P1S-S025DS-0060
1717	E121K46-4270-486265C2	25SBTF13MPN8	P1S-S025DS-0125
1806	E121K46-4270-486265C2	25SBTF13MPNS	P1S-S025DS-0125
1810	E121K46-4270-486265S2	25SBTF13MPX	P1S-S025DS-0150
1810	E121K46-4270-486265S2	25SBTF13MPX6	P1S-S025DS-0150
1812	E121K63	25SBTF13MVN	P1S-S025DS-0160
1816	E121K63	25SBTF13MVX	P1S-S025DS-0160
1816	E121K63-2995-4818653D	25SBTF13MVX6	P1S-S025DS-0200
1819	E121K63-2995-4818653D	25SBTF13MVX8	P1S-S025DS-0200
1819	E121K63-2995-481865A2	25SBTF13RVX	P1S-S025DS-0250
1912	E121K63-2995-481865A2	25SBTP06MPX	P1S-S025DS-0250
1912	E121K63-2995-481865C2	25SBTP10MPN	P1S-S025MS-0010
2001	E121K63-2995-481865C2	25SBTP10MPX	P1S-S025MS-0010
2100	E121K63-4270-4810003D	25SBTP13MPN	P1S-S025MS-0020
2100	E121K63-4270-4810003D	25SBTP13MPX	P1S-S025MS-0020
2108	E121K63-4270-481000C7	25SBTS06MPN	P1S-S025MS-0025
2153	E121K63-4270-481000C7	25SBTS06MPX	P1S-S025MS-0025
002199	E121K63-4270-481044A7	25SBTS06RVX	P1S-S025MS-0030
2201	E121K63-4270-481044A7	25SBTS08MPN	P1S-S025MS-0030
2202	E121K63-4270-481044F4	25SBTS08MPX	P1S-S025MS-0040
2203	E121K63-4270-481044F4	25SBTS08MVN	P1S-S025MS-0040
2210	E121K63-4270-486265A7	25SBTS08RVX	P1S-S025MS-0050
2250	E121K63-4270-486265A7	25SBTS10MPN	P1S-S025MS-0050
2251	E121K63-4270-486265B7	25SBTS10MPX	P1S-S025MS-0060
2253	E121K63-4270-486265B7	25SBTS10RVX	P1S-S025MS-0060
2301	E121K63-4270-486265C2	25SDAW13MPN	P1S-S025MS-0080
2302	E121K63-4270-486265C2	25SDAW17MPN	P1S-S025MS-0080
2303	E121K63-4270-486265F4	25SDAW21MPN	P1S-S025MS-0100
2304	E121K63-4270-486265F4	25SDIW13MEN	P1S-S025MS-0100
2305	E121K64	25SDIW13MPN	P1S-S025MS-0125
2312	E121K64	25SDIW17MPN	P1S-S025MS-0125
2313	E121K64-2995-4818653D	25SDIW21MPN	P1S-S025MS-0150
2314	E121K64-2995-4818653D	25SDTF06MPN	P1S-S025MS-0150
2315	E121K64-2995-481865C2	25SDTF08MPN	P1S-S025MS-0250
2320	E121K64-2995-481865C2	25SDTF09MPN	P1S-S025MS-0250
2320	E121K64-4270-481044F4	25SDTF10MPN	P1S-S025MS-0320
2439	E121K64-4270-481044F4	25SDTF13MPN	P1S-S025MS-0320
2449	E121K64-4270-486265C2	25SFAD14SXZ	P1S-S025MS-0400
2520	E121K64-4270-486265C2	25SFAD16SXZ	P1S-S025MS-0400
2741	E121K64-4270-486265F4	25SFAD18SXZ	P1S-S025SS-0015
2742	E121K64-4270-486265F4	25SFAK10SXZ	P1S-S025SS-0015
2743	E121K64-4538-4810006J	25SFAK13SXZ	P1S-S025SS-0025

2801	E121K64-4538-4810006J	25SFAK17SXZ	P1S-S025SS-0025
2802	E121K65	25SFAK21SXZ	P1S-S025SS-0040
2803	E121K65	25SFAM18RXX	P1S-S025SS-0040
2805	E121K65-2995-4818653D	25SFAN10SXN	P1S-S025SS-0050
2806	E121K65-2995-4818653D	25SFAN13SXZ	P1S-S025SS-0050
2807	E121K65-2995-481865C2	25SFAN21RXX	P1S-S025SS-0080
2808	E121K65-2995-481865C2	25SFAN21SXZ	P1S-S025SS-0080
2809	E121K65-2995-483510P0	25SFAW10EXX	P1S-W080MS-0070
2810	E121K65-2995-483510P0	25SFAW10RXX	P1S-W080MS-0070
2811	E121K65-2995-483510S6	25SFAW10SXZ	P1S-W080MS-0100
2812	E121K65-2995-483510S6	25SFAW13EXX	P1S-W080MS-0100
2813	E121K65-4270-481000C1	25SFAW13EXXS	P1S-W080MS-0120
2814	E121K65-4270-481000C1	25SFAW13RXX	P1S-W080MS-0120
2815	E121K65-4270-486265A2	25SFAW13RXX0S	P1S-W080MS-0150
2816	E121K65-4270-486265A2	25SFAW13RXX3S	P1S-W080MS-0150
2818	E121K65-4270-486265C1	25SFAW13RXX6	P1S-W080MS-0165
2819	E121K65-4270-486265C1	25SFAW13RXX6S	P1S-W080MS-0165
2820	E121K65-4270-486265C2	25SFAW13RXX8S	P1S-W080MS-0200
2821	E121K65-4270-486265C2	25SFAW13SXZ	P1S-W080MS-0200
2822	E121K65-4270-486265F4	25SFAW17EXX	P1S-W080MS-0250
2823	E121K65-4270-486265F4	25SFAW17RXX	P1S-W080MS-0250
2824	E121K65-4538-486265C2	25SFAW17SXZ	P1S-W080MS-0320
2825	E121K65-4538-486265C2	25SFAW21EXX	P1S-W080MS-0320
2826	E121K65-483371C2	25SFAW21EXXS	P1S-W080MS-0360
2827	E121K65-483371C2	25SFAW21RXX	P1S-W080MS-0360
2860	E121K67	25SFAW21SXZ	P1S-W080MS-0400
2861	E121K67	25SFIM14RXX	P1S-W080MS-0400
2862	E121K67-4270-486265C2	25SFIM16RXX	P1S-W080MS-0700
2863	E121K67-4270-486265C2	25SFIM16SXZ	P1S-W080MS-0700
2864	E121K67-4270-486265F4	25SFIM18RXX	P1S-W080MS-0800
2866	E121K67-4270-486265F4	25SFIM18SXZ	P1S-W080MS-0800
2867	E129-12-060	25SFIW10EXX	P1S-W080MS-0900
2868	E129-12-090	25SFIW10RXX	P1S-W080MS-0900
3117	E129-12-120	25SFIW10SXZ	P1S-W080MS-1000
3117	E129-13-090	25SFIW13EXX	P1S-W080MS-1000
3125	E129-13-120	25SFIW13EXXS	P1S-W080MS-1100
3125	E129A-13-120	25SFIW13RXX	P1S-W080MS-1100
3241	E129C-12-060	25SFIW13RXX8	P1S-W100MS-0050
3248	E129C-12-090	25SFIW13SXZ	P1S-W100MS-0050
3256	E129C-12-120	25SFIW17EXX	P1S-W100MS-0080
3257	E131E03	25SFIW17RXX	P1S-W100MS-0080
3452	E131E03	25SFIW17RXX3S	P1S-W100MS-0280
3516	E131E03-2995-4818653D	25SFIW17SXZ	P1S-W100MS-0280
3516	E131E03-2995-4818653D	25SFIW21EXX	P1S-W100MS-0380
3518	E131E03-2995-481865C2	25SFIW21RXX	P1S-W100MS-0380
3518	E131E03-2995-481865C2	25SFIW21SXZ	P1S-W100MS-0470
3644	E131E03-2995-482725C2	25SFKO06EXX	P1S-W100MS-0470
3723	E131E03-2995-482725C2	25SFKO06RXX	P1S-W100MS-0600
3805	E131E03-2995-483510S6	25SFKO08EXX	P1S-W100MS-0600
3810	E131E03-2995-483510S6	25SFKO08RXX	P1S-W100MS-0650
3811	E131E03-4270-481000C2	25SFKO10RXX	P1S-W100MS-0650
3820	E131E03-4270-481000C2	25SFKO10RXXS	P1S-W100MS-0850
3821	E131E03-495905C2	25SFKO12EXX	P1S-W100MS-0850

3826	E131E03-495905C2	25SFKO12RXX	P1S-W100MS-1050
4033	E131E03-495905F4	25SFTF04RXX	P1S-W100MS-1050
4056	E131E03-495905F4	25SFTF06EXX	P1S-W100MS-1300
4061	E131F26	25SFTF06RXX	P1S-W100MS-1300
4082	E131F26	25SFTF06SXZ	P1S-W125MS-0160
4120	E131F26-2995-4818653D	25SFTF08EXX	P1S-W125MS-0160
4121	E131F26-2995-4818653D	25SFTF08RXX	P1S-W125MS-0170
4123	E131F26-2995-482730C2	25SFTF08SXZ	P1S-W125MS-0170
4168	E131F26-2995-482730C2	25SFTF09EXX	P1S-W125MS-0280
4169	E131F43	25SFTF09RXX	P1S-W125MS-0280
4170	E131F43	25SFTF09SXZ	P1S-W125MS-0320
4270	E131F43-2995-4818653D	25SFTF10EXX	P1S-W125MS-0320
4270	E131F43-2995-4818653D	25SFTF10RXX	P1V-6/312681
4292	E131F43-2995-481865A2	25SFTF10SXZ	P1V-6/312681
4294	E131F43-2995-481865A2	25SFTF13EXX	P1V-6/3516171P
4311	E131F43-2995-481865C2	25SFTF13RXX	P1V-6/3516171P
4311	E131F43-2995-481865C2	25SFTF13SXZ	P1V-6/365917
4312	E131F43-2995-483510P0	25SFTP10SXN	P1V-6/365917
4314	E131F43-2995-483510P0	25SFTP13SXN	P1V-6/388378A
4510	E131F43-4270-481000C2	25SFTS06RXX	P1V-6/388378A
4516	E131F43-4270-481000C2	25SFTS08RXX	P1V-6/444552
4520	E131F44	25SFTS10RXX	P1V-6/444552
4525	E131F44	25SFTS10RXXS	P1V-6/4445753
4554	E131F44-299503-491514P3	25SLAD14MPX	P1V-6/4445753
4561	E131F44-299503-491514P3	25SLAD16MPX	P1V-6/444591
4583	E131F44-2995-4818653D	25SLAD18MPX	P1V-6/444591
4584	E131F44-2995-4818653D	25SLAF11RVX	P1V-6/801975
4585	E131F44-2995-481865C2	25SLAK21MVN	P1V-6/801975
4610	E131F44-2995-481865C2	25SLAN13EVX	P1V-6/802096
4612	E131F44-2995-483510S6	25SLAN13RVX	P1V-6/802096
4661	E131F44-2995-483510S6	25SLAW13EVX	P1V-6/804655
4786	E131K03	25SLAW13MPN	P1V-6/804655
4930	E131K03	25SLAW13MPX	P1V-6/804661
4945	E131K0308	25SLAW13MVN	P1V-6/804661
4952	E131K0308	25SLAW13RVX	P1V-6/823220
5010	E131K0325	25SLAW17EVX	P1V-6/823220
5011	E131K0325	25SLAW17MEN	P1V-6/823490
5020	E131K0325-2995-481865A5	25SLAW17MPN	P1V-6/823490
5198	E131K0325-2995-481865A5	25SLAW17MPX	P1V-A160A0900
5.306	E131K0325-2995-481865C2	25SLAW17RVX	P1V-A160A0900
5.307	E131K0325-2995-481865C2	25SLAW21EVX	P1V-A160AC900
5312	E131K0325-495905C2	25SLAW21MEN	P1V-A160AC900
5320	E131K0325-495905C2	25SLAW21MPN	P1V-A160B0019
5325	E131K03-2995-4818653D	25SLAW21MPX	P1V-A160B0019
5362	E131K03-2995-4818653D	25SLAW21RVX	P1V-A160B0120
5478	E131K03-2995-481865A2	25SLIK13MPN	P1V-A160B0120
5491	E131K03-2995-481865A2	25SLIM14MPN	P1V-A160E0008B3
5498	E131K03-2995-481865C2	25SLIM14MPX	P1V-A160E0008B3
5510	E131K03-2995-481865C2	25SLIM16MPX	P1V-A160E0014B7
5511	E131K03-4270-4810000A	25SLIM18MPX	P1V-A160E0014B7
5511	E131K03-4270-4810000A	25SLIW13EVX	P1V-A160H0010B3
5512	E131K03-4270-4810003D	25SLIW13MPN	P1V-A160H0010B3
5515	E131K03-4270-4810003D	25SLIW13MPX	P1V-A260A0700

5520	E131K03-4270-481000C2	25SLIW13RVX	P1V-A260A0700
5521	E131K03-4270-481000C2	25SLIW17EVX	P1V-A260B0019
5521	E131K03-4833713D	25SLIW17MPN	P1V-A260B0019
5529	E131K03-4833713D	25SLIW17MPX	P1V-A260B0060
5551	E131K03-483371C2	25SLIW17MVN	P1V-A260B0060
5561	E131K03-483371C2	25SLIW17RVX	P1V-A260B0120
5563	E131K03-492190C2	25SLIW21EVX	P1V-A260B0120
5597	E131K03-492190C2	25SLIW21MPN	P1V-A260H0013B3
5675	E131K03-492190P9	25SLIW21MPX	P1V-A260H0013B3
5695	E131K03-492190P9	25SLIW21MVN	P1V-A360A0600
5884	E131K03-495905C2	25SLIW21MVX	P1V-A360A0600
5902	E131K03-495905C2	25SLIW21RVX	P1V-A360E0025B3
5954	E131K03-495905F4	25SLKK08MPX	P1V-A360E0025B3
6184	E131K03-495905F4	25SLKK10MPX	P1V-A360H0013B3
6409	E131K0350	25SLKK12MPX	P1V-A360H0013B3
6866	E131K0350	25SLKO08MPN	P1V-A360H0022B3
7071	E131K0350-2995-481865C2	25SLKO08MPX	P1V-A360H0022B3
7071	E131K0350-2995-481865C2	25SLKO10MPN	P1V-B510A0060
7073	E131K04	25SLKO10MPX	P1V-B510A0060
7073	E131K04	25SLKO10RVX	P1V-M020A0003
7170	E131K04-2995-4818653D	25SLKO12MPX	P1V-M020A0003
7170	E131K04-2995-4818653D	25SLTF06MPN	P1V-M020A0006
7370	E131K04-2995-481865C2	25SLTF06RVX	P1V-M020A0006
7370	E131K04-2995-481865C2	25SLTF08MPN	P1V-M020A0009
7510	E131K04-4538-481000A2	25SLTF08MVN	P1V-M020A0009
7511	E131K04-4538-481000A2	25SLTF08RVX	P1V-M020A0021
7526	E131K04-495905C2	25SLTF09EVX	P1V-M020A0021
7526	E131K04-495905C2	25SLTF09MPN	P1V-M020A0041
07563	E131K0450	25SLTF09MPX	P1V-M020A0041
7564	E131K0450	25SLTF09RVX	P1V-M020A0081
007634	E131K0450-2995-481865C2	25SLTF10MPN	P1V-M020A0081
7676	E131K0450-2995-481865C2	25SLTF10MPX	P1V-M020A0150
7676	E131K0450-4538	25SLTF13EVX	P1V-M020A0150
7853	E131K0450-4538	25SLTF13MPN	P1V-M020A0A00
8021	E131K0450-4538-4810003D	25SLTF13MPX	P1V-M020A0A00
8022	E131K0450-4538-4810003D	25SLTF13RVX	P1V-M040A0003
8.204	E131K06	25SLTS06MPN	P1V-M040A0003
8.207	E131K06	25SLTS06MPX	P1V-M040A0021
8898	E131K0605	25SLTS10MPX	P1V-M040A0021
8898	E131K0605	25SRIW17SXN	P1V-M040A0150
9031	E131K0605-2995-495294C2	25SRIW17SXNS	P1V-M040A0150
9031	E131K0605-2995-495294C2	25SRTF06SXN	P1V-M040A0A00
9042	E131K06-299503-491514P3	25SRTF08SXN	P1V-M040A0A00
9042	E131K06-299503-491514P3	25SRTF09SXNS	P1V-M060A0003
10010	E131K06-2995-4818653D	25SRTF10SXN	P1V-M060A0003
10010	E131K06-2995-4818653D	25SRTF13SXN	P1V-M060A0006
10016	E131K06-2995-481865A5	25SSAK10SXZ	P1V-M060A0006
10016	E131K06-2995-481865A5	25SSAK13SXN	P1V-M060A0009
10020	E131K06-2995-481865C2	25SSAK13SXZ	P1V-M060A0009
10021	E131K06-2995-481865C2	25SSAK17SXZ	P1V-M060A0021
10026	E131K06-2995-483510S5	25SSAK21SXZ	P1V-M060A0021
10026	E131K06-2995-483510S5	25SSAN13SXZ	P1V-M060A0041
11007	E131K06-2995-483510S6	25SSAW13RXX	P1V-M060A0041

11040	E131K06-2995-483510S6	25SSAW13SXZ	P1V-M060A0081
11075	E131K06-4270-4810003D	25SSIW13SXZ	P1V-M060A0081
11340	E131K06-4270-4810003D	25SSIW17SXZ	P1V-M060A0150
11350	E131K06-4538-4810000A	25SSIW21SXZ	P1V-M060A0150
11410	E131K06-4538-4810000A	25SSTF06SXZ	P1V-M060A0A00
11410	E131K06-4538-4810003D	25SSTF08SXZ	P1V-M060A0A00
11676	E131K06-4538-4810003D	25SSTF09SXZ	P1V-MF1
11677	E131K06-4538-4810004K	25SSTF10SXZ	P1V-MF1
11678	E131K06-4538-4810004K	25SSTF13SXZ	P1V-P007A02200
11703	E131K06-4538-481000C2	2-6 FBZ-SS	P1V-P007A02200
12264	E131K06-4538-481000C2	2600-25--0000-000000	P1V-P007F00110
12879	E131K06-4538-486265F4	2600-25--0000-000000	P1V-P007F00110
13006	E131K06-4538-486265F4	2600-25-00070-0000-000000	P1V-P007F00220
13006	E131K06-492070C2	2600-25-00070-0000-000000	P1V-P007F00220
13041	E131K06-492070C2	2600-25-00100-0000-000000	P1V-P012A01800
13062	E131K06-492190C2	2600-25-00100-0000-000000	P1V-P012A01800
13220	E131K06-492190C2	2600-25-00160-0000-000000	P1V-P012B00012
13220	E131K06-495905C2	2600-25-00160-0000-000000	P1V-P012B00012
13230	E131K06-495905C2	2600-25-00170-0000-000000	P1V-P012B01800
13320	E131K06-495905F4	2600-25-00170-0000-000000	P1V-P012B01800
13405	E131K06-495905F4	2600-25-00170-0000-0000A2	P1V-P012F00012
13405	E131K0650	2600-25-00170-0000-0000A2	P1V-P012F00012
13410	E131K0650	2600-25-00175-0000-000000	P1V-P023A01500
13410	E131K0650-2995-4818653D	2600-25-00175-0000-000000	P1V-P023A01500
13420	E131K0650-2995-4818653D	2600-25-00200-0000-000000	P1V-P023B00150
13437	E131K0650-2995-481865C2	2600-25-00200-0000-000000	P1V-P023B00150
15005	E131K0650-2995-481865C2	2600-25-00250-0000-000000	P1V-P023B00300
15015	E131K0650-2995-482725C2	2600-25-00250-0000-000000	P1V-P023B00300
15015	E131K0650-2995-482725C2	2600-25-00250-0001-000000	P1V-P023B01500
15020	E131K13	2600-25-00250-0001-000000	P1V-P023B01500
15020	E131K13	2600-25-00320-0000-000000	P1V-P023F00015
15021	E131K13-2995-481865C2	2600-25-00320-0000-000000	P1V-P023F00015
15021	E131K13-2995-481865C2	2600-25-00320-0001-000000	P1V-P023F00300
15025	E131K13-4270-481044A7	2600-25-00320-0001-000000	P1V-P023F00300
015307	E131K13-4270-481044A7	2600-25-00340-0000-000000	P1V-S002A0130
15374	E131K14	2600-25-00340-0000-000000	P1V-S002A0130
16006	E131K14	2600-25-00350-0000-000000	P1V-S008A0130
16006	E131K14-2995-481865A5	2600-25-00350-0000-000000	P1V-S008A0130
16230	E131K14-2995-481865A5	2600-25-00350-0100-020000	P1V-S008A0190
16230	E131K14-2995-481865C2	2600-25-00350-0100-020000	P1V-S008A0190
16420	E131K14-2995-481865C2	2600-25-00400-0000-000000	P1V-S008A0700
16420	E131K63	2600-25-00400-0000-000000	P1V-S008A0700
17135	E131K63	2600-25-00420-0000-000000	P1V-S012A0010
17155	E131K63-2995-481865C2	2600-25-00420-0000-000000	P1V-S012A0010
18006	E131K63-2995-481865C2	2600-25-00425-0000-000000	P1V-S012A0060
18006	E131K63-4538-481000C5	2600-25-00425-0000-000000	P1V-S012A0060
18010	E131K63-4538-481000C5	2600-25-00430-0000-000000	P1V-S012A0090
18010	E131K64	2600-25-00430-0000-000000	P1V-S012A0090
18012	E131K64	2600-25-00450-0000-000000	P1V-S012A0140
18016	E131K64-4270-4810003D	2600-25-00450-0000-000000	P1V-S012A0140
18019	E131K64-4270-4810003D	2600-25-00475-0000-000000	P1V-S012A0360
18105	E131K64-4270-481044A7	2600-25-00475-0000-000000	P1V-S012A0360
18110	E131K64-4270-481044A7	2600-25-00500-0000-000000	P1V-S012A0550

18110	E131K64-4270-486265A7	2600-25-00500-0000-000000	P1V-S012A0550
18210	E131K64-4270-486265A7	2600-25-00515-0000-000000	P1V-S012A0N00
18210	E131K64-4270-486265C2	2600-25-00515-0000-000000	P1V-S012A0N00
18220	E131K64-4270-486265C2	2600-25-00550-0000-000000	P1V-S012AC140
18230	E131K64-4270-486265F4	2600-25-00550-0000-000000	P1V-S012AC140
18230	E131K64-4270-486265F4	2600-25-00550-0101-000000	P1V-S012AZ140
18320	E131K6450	2600-25-00550-0101-000000	P1V-S012AZ140
18320	E131K6450	2600-25-00575-0000-000000	P1V-S012D0010
18405	E131K6450-4270-486265F4	2600-25-00575-0000-000000	P1V-S012D0010
18405	E131K6450-4270-486265F4	2600-25-00580-0000-000000	P1V-S012D0060
18410	E133F43	2600-25-00580-0000-000000	P1V-S012D0060
18416	E133F43	2600-25-00580-0001-000000	P1V-S012D0090
18420	E133F43-2995-481865C2	2600-25-00580-0001-000000	P1V-S012D0090
18420	E133F43-2995-481865C2	2600-25-00600-0000-000000	P1V-S012D0140
19902	E133F44-2995-481865C2	2600-25-00600-0000-000000	P1V-S012D0140
19902	E133F44-2995-481865C2	2600-25-00620-0000-000000	P1V-S012D0360
20707	E133K03	2600-25-00620-0000-000000	P1V-S012D0360
21025	E133K03	2600-25-00625-0000-000000	P1V-S012D0550
21210	E133K03-2995-4818653D	2600-25-00625-0000-000000	P1V-S012D0550
21210	E133K03-2995-4818653D	2600-25-00650-0000-000000	P1V-S012D0N00
021271	E133K03-2995-481865A2	2600-25-00650-0000-000000	P1V-S012D0N00
021272	E133K03-2995-481865A2	2600-25-00650-0000-000072	P1V-S017M0150
021273	E133K03-2995-481865C2	2600-25-00650-0000-000072	P1V-S017M0150
021291	E133K03-2995-481865C2	2600-25-00670-0000-000000	P1V-S020A00005
021306	E133K03-2995-481865C4	2600-25-00670-0000-000000	P1V-S020A00005
021307	E133K03-2995-481865C4	2600-25-00700-0000-000000	P1V-S020A0001
021308	E133K03-2995-482725A5	2600-25-00700-0000-000000	P1V-S020A0001
021310	E133K03-2995-482725A5	2600-25-00710-0000-000000	P1V-S020A0002
021311	E133K03-4270-4810000A	2600-25-00710-0000-000000	P1V-S020A0002
021340	E133K03-4270-4810000A	2600-25-00725-0000-000000	P1V-S020A0005
021352	E133K03-4270-481000C2	2600-25-00725-0000-000000	P1V-S020A0005
021357	E133K03-4270-481000C2	2600-25-00750-0000-000000	P1V-S020A0011
021358	E133K04	2600-25-00750-0000-000000	P1V-S020A0011
021359	E133K04	2600-25-00765-0000-000000	P1V-S020A0018
021366	E133K04-2995-4818653D	2600-25-00765-0000-000000	P1V-S020A0018
021379	E133K04-2995-4818653D	2600-25-00800-0000-000000	P1V-S020A0035
021382	E133K04-2995-481865A2	2600-25-00800-0000-000000	P1V-S020A0035
021383	E133K04-2995-481865A2	2600-25-00845-0000-000000	P1V-S020A0070
021384	E133K04-2995-483510P0	2600-25-00845-0000-000000	P1V-S020A0070
021385	E133K04-2995-483510P0	2600-25-00850-0000-000000	P1V-S020A0140
021390	E133K04-483371C2	2600-25-00850-0000-000000	P1V-S020A0140
021392	E133K04-483371C2	2600-25-00875-0000-000000	P1V-S020A0240
021394	E133K0450	2600-25-00875-0000-000000	P1V-S020A0240
021395	E133K0450	2600-25-00900-0000-000000	P1V-S020A0460
021415	E133K05	2600-25-00900-0000-000000	P1V-S020A0460
021428	E133K05	2600-25-00950-0000-000000	P1V-S020A0E50
021465	E133K05-2995-4818653D	2600-25-00950-0000-000000	P1V-S020A0E50
021468	E133K05-2995-4818653D	2600-25-01000-0000-000000	P1V-S020AC035
025126	E133K05-2995-481865C2	2600-25-01000-0000-000000	P1V-S020AC035
025131	E133K05-2995-481865C2	2600-25-01000-0000-100000	P1V-S020AC140
025132	E133K05-2995-483510S6	2600-25-01000-0000-100000	P1V-S020AC140
025133	E133K05-2995-483510S6	2600-25-01020-0000-000000	P1V-S020AC240
025136	E133K05-4270-4810003D	2600-25-01020-0000-000000	P1V-S020AC240

025138	E133K05-4270-4810003D	2600-25-01020-0001-000000	P1V-S020AG035
025156	E133K05-4270-481000C2	2600-25-01020-0001-000000	P1V-S020AG035
028483	E133K05-4270-481000C2	2600-25-01050-0000-000000	P1V-S020AZ070
29901	E133K05-4270-486265A7	2600-25-01050-0000-000000	P1V-S020AZ070
29901	E133K05-4270-486265A7	2600-25-01120-0000-000000	P1V-S020D0005
30785	E133K06	2600-25-01120-0000-000000	P1V-S020D0005
30965	E133K06	2600-25-01135-0000-000000	P1V-S020D0018
31871	E133K06-2995-4818653D	2600-25-01135-0000-000000	P1V-S020D0018
31960	E133K06-2995-4818653D	2600-25-01150-0000-000000	P1V-S020D0035
32006	E133K06-2995-481865A2	2600-25-01150-0000-000000	P1V-S020D0035
32059	E133K06-2995-481865A2	2600-25-01160-0000-000000	P1V-S020D0070
032143	E133K06-2995-481865A4	2600-25-01160-0000-000000	P1V-S020D0070
032435	E133K06-2995-481865A4	2600-25-01200-0000-000000	P1V-S020D0140
032436	E133K06-2995-481865A5	2600-25-01200-0000-000000	P1V-S020D0140
032439	E133K06-2995-481865A5	2600-25-01200-0000-010000	P1V-S020D0240
32734	E133K06-2995-481865C2	2600-25-01200-0000-010000	P1V-S020D0240
032821	E133K06-2995-481865C2	2600-25-01250-0000-000000	P1V-S020D0460
032861	E133K06-2995-482725A5	2600-25-01250-0000-000000	P1V-S020D0460
33006	E133K06-2995-482725A5	2600-25-01300-0000-000000	P1V-S020D0E50
33006	E133K06-2995-482730C2	2600-25-01300-0000-000000	P1V-S020D0E50
33401	E133K06-2995-482730C2	2600-25-01300-0001-000000	P1V-S020DC035
29-01-01	E133K06-2995-483510S5	2600-25-01300-0001-000000	P1V-S020DC035
039040	E133K06-2995-483510S5	2600-25-01309-0000-000000	P1V-S020DZ070
039044	E133K06-4270-481000C2	2600-25-01309-0000-000000	P1V-S020DZ070
039046	E133K06-4270-481000C2	2600-25-01379-0000-000000	P1V-S020DZ140
039049	E133K06-492190C2	2600-25-01379-0000-000000	P1V-S020DZ140
039050	E133K06-492190C2	2600-25-01380-0000-000000	P1V-S020N0X00
39107	E133K06-495905C2	2600-25-01380-0000-000000	P1V-S020N0X00
39107	E133K06-495905C2	2600-25-01400-0000-000000	P1V-S025M0035
40211	E133K0650	2600-25-01400-0000-000000	P1V-S025M0035
40638	E133K0650	2600-25-01470-0000-000000	P1V-S025N0250
40667	E133K13	2600-25-01470-0000-000000	P1V-S025N0250
40749	E133K13	2600-25-01500-0000-000000	P1V-S025N0480
41389	E133K13-2995	2600-25-01500-0000-000000	P1V-S025N0480
8.2	E133K13-2995	2600-25-01500-0000-000022	P1V-S030/S32745
42484	E133K13-2995-4818653D	2600-25-01500-0000-000022	P1V-S030/S32745
42903	E133K13-2995-4818653D	2600-25-01515-0000-000000	P1V-S030A0005
43006	E133K14	2600-25-01515-0000-000000	P1V-S030A0005
43006	E133K14	2600-25-01700-0100-020000	P1V-S030A0010
43010	E133K14-492190C2	2600-25-01700-0100-020000	P1V-S030A0010
43018	E133K14-492190C2	2600-25-01730-0000-000000	P1V-S030A0018
43018	E133K16	2600-25-01730-0000-000000	P1V-S030A0018
45102	E133K16	2600-25-01730-0001-000000	P1V-S030A0023
45103	E133K16-2995-4818653D	2600-25-01730-0001-000000	P1V-S030A0023
45104	E133K16-2995-4818653D	2600-25-01730-0101-000000	P1V-S030A0028
45204	E133K16-2995-481865C2	2600-25-01730-0101-000000	P1V-S030A0028
45254	E133K16-2995-481865C2	2600-25-01800-0000-000000	P1V-S030A0060
50940	E134-11-060	2600-25-01800-0000-000000	P1V-S030A0060
50941	E134-11-090	2600-25-04250-0000-000000	P1V-S030A0140
50942	E134-11-120	2600-25-04250-0000-000000	P1V-S030A0140
50943	E138-13	26-039-000	P1V-S030A0240
50944	E15/12X	26-039-000	P1V-S030A0240
50945	E1516/12.5X	260R30MTC	P1V-S030A0460

50946	E155-11-060	260R30SVSD01	P1V-S030A0460
50949	E155-11-090	2615FIL	P1V-S030A0E50
50952	E155-11-120	2615FIL	P1V-S030A0E50
052962	E161-11-050	2640D-025V32	P1V-S030AC023
53007	E161-11-060	2640D-03-20M-HPK	P1V-S030AC023
53007	E161A-11-060	2640D-03-5M-HPK	P1V-S030AC028
53101	E162-11-060	2640D-03-7M-HPK	P1V-S030AC028
53344	E162-11-090	2640D-03V32	P1V-S030AC060
55206	E163-11-060	2640D-03V32-DL	P1V-S030AC060
55374	E163-11-090	2640D-03V34	P1V-S030AC240
055489	E163-11-120	2640D-05V32	P1V-S030AC240
055512	E164-11-050	2640D-05V32-DL	P1V-S030AD010
055513	E164-11-060	2640N-08V32	P1V-S030AD010
055514	E165-11-060	2640N-08V32-DL	P1V-S030AZ240
055515	E165-11-090	2640N-12V32	P1V-S030AZ240
055516	E16-59E	2640N-16V32	P1V-S030AZ460
055517	E170-12	2640N-32V80	P1V-S030AZ460
055518	E172-13	2640N-48V80	P1V-S030D0005
055519	E173-13	2644FIL	P1V-S030D0005
56400	E174-13	2644FIL	P1V-S030D0018
56794	E176-12	2646FIL	P1V-S030D0018
57121	E176-13	2646FIL	P1V-S030D0028
57147	E177-12	2648N-12V32	P1V-S030D0028
57243	E177A-12	2648N-12V32-DL	P1V-S030D0060
57294	E178-12	2677FIL	P1V-S030D0060
57304	E179-11-060	2677FIL	P1V-S030D0140
57330	E18/14X	267SDFJP-M5XK	P1V-S030D0140
57331	E1820/16X	267XBFJP-M5GF	P1V-S030D0240
57332	E188-12	267XBFJP-M5RA	P1V-S030D0240
57333	E189-12	267XBFJP-M5XK	P1V-S030D0460
57334	E18-C3-0000	267XBFJP-M5XY	P1V-S030D0460
57335	E18-C3-0000	267XDFJP-M5RA	P1V-S030D0E50
57336	E18-C4-0000	267XDFJP-M5RY	P1V-S030D0E50
57338	E18-C4-0000	267XDFJP-M5XD	P1V-S040M0250
57340	E193-11-120	267XDFJP-M5XX	P1V-S040M0250
57341	E200-13	267XGFJP-M3XW	P1V-S040M0480
57342	E206-11	267XGFJP-M3XX	P1V-S040M0480
57343	E219-12	267XGFJP-M5AK	P1V-S040N0L00
57344	E22/18X	267XGFJP-M5GF	P1V-S040N0L00
57346	E220-12	267XGFJP-M5RA	P1V-S060A0010
57347	E222-13	267XGFJP-M5XD	P1V-S060A0010
57348	E225JIC3	267XGFJP-M5XK	P1V-S060A0030
57394	E230-13	267XGFJP-M5XR	P1V-S060A0030
57396	E232-13	267XGFJP-M5XW	P1V-S060A0048
57475	E24-55V	267XGFJP-M5XX	P1V-S060A0048
57532	E24-59V	267XMFJP-M5XK	P1V-S060A0072
57533	E246-13-060	2685FIL	P1V-S060A0072
57536	E257-11	2685FIL	P1V-S060A0170
57570	E25SA1-063M04-04003-00920	2686FIL	P1V-S060A0170
57571	E25SA1-063M04-04003-00920	2686FIL	P1V-S060A0270
57572	E25SA1-063M05-04003-01123	268FIL	P1V-S060A0270
58524	E25SA1-063M05-04003-01123	268FIL	P1V-S060A0400
62322	E25SA2-063M05-04003-01123	2692FIL	P1V-S060A0400

62322	E25SA2-063M05-04003-01123	2692FIL	P1V-S060A0E00
62331	E25SB1-063M05-04003-00920	269FIL	P1V-S060A0E00
62331	E25SB1-063M05-04003-00920	269FIL	P1V-S060AC010
63404	E25SB1-099M06-07302-01023	26KAAD14MPN	P1V-S060AC010
065066	E25SB1-099M06-07302-01023	26KAAD14MPX	P1V-S060AC048
67526	E28-04-0000	26KAAD16MPN	P1V-S060AC048
068024	E28-04-0000	26KAAD16MPX	P1V-S060AC170
68368	E28-06-EC00	26KAAD18MPN	P1V-S060AC170
68369	E28-06-EC00	26KAAD18MPX	P1V-S060AZ010
68370	E28-C3-EC00	26KAAD22MPX	P1V-S060AZ010
68371	E28-C3-EC00	26KAAK17MPX	P1V-S060AZ072
68372	E28-C4-0000	26KAAK21MEX	P1V-S060AZ072
68373	E28-C4-0000	26KAAK21MPX	P1V-S120A0012
68374	E28-C4-EC00	26KAAN13MPX	P1V-S120A0012
68375	E28-C4-EC00	26KAAN17MPX	P1V-S120A0032
69090	E28-C4-ED00	26KAAW10MPN	P1V-S120A0032
69091	E28-C4-ED00	26KAAW10MPNS_02	P1V-S120A0078
69093	E28-C6-0000	26KAAW10MPX	P1V-S120A0078
69095	E28-C6-0000	26KAAW10MPXS	P1V-S120A0110
69195	E28-C6-00V0-55	26KAAW13MEN	P1V-S120A0110
69196	E28-C6-00V0-55	26KAAW13MEX	P1V-S120A0270
69197	E28-C6-EC00	26KAAW13MPC	P1V-S120A0270
69198	E28-C6-EC00	26KAAW13MPN	P1V-S120A0800
69205	E2A020Y320N	26KAAW13MPNS	P1V-S120A0800
69206	E2A020ZN	26KAAW13MPNS_07	P1V-S120AC078
69207	E2A040ZNMK3	26KAAW13MPX	P1V-S120AC078
69208	E2A050Y300NMK2	26KAAW13MPX	P1V-S120AC270
69209	E2A050ZNMK2	26KAAW13MPXB	P1V-S120AC270
69210	E2A050ZVMK2	26KAAW13MPXS	P1V-S120AZ032
69213	E2A055ZNMK3	26KAAW13MPXS_07	P1V-S120AZ032
69215	E2A060T140NMK2	26KAAW13MPXS_10	P1V-S4008B
69216	E2A060Z350NMK2	26KAAW13MPXS_11	P1V-S4008B
69590	E2A060ZN345MK2	26KAAW13MPXS_13	P1V-S4008F
69591	E2A060ZNMK2	26KAAW13MPXS_16	P1V-S4008F
69592	E2A125ZNMK2	26KAAW13MPXS_18	P1V-S4012B
69593	E2B020Y200N	26KAAW13MPXS_19	P1V-S4012B
69594	E2B020Y2900N	26KAAW13MPXS_22	P1V-S4012F
69595	E2B020Y410N	26KAAW13MPXS_26	P1V-S4012F
69596	E2B020Z400N	26KAAW13MPXS_27	P1V-S4020B
69597	E2B020ZN	26KAAW13MPXS_34	P1V-S4020B
69598	E2B020ZN519	26KAAW13MPXS_38	P1V-S4020C
69599	E2B040Z215NMK3	26KAAW13MPXS_99	P1V-S4020C
69600	E2B040Z300NMK3	26KAAW13MSXS	P1V-S4020F
70712	E2B040Z350N	26KAAW13MVN	P1V-S4020F
70712	E2B040ZNMK3	26KAAW13MVNS	P1V-S4030B
71328	E2B040ZVMK3	26KAAW13MVX	P1V-S4030B
71679	E2B055ZNMK3	26KAAW13MVXS	P1V-S4030F
72059	E2B060Z225NMK2	26KAAW13RVX	P1V-S4030F
72127	E2B060Z320N460MK2	26KAAW13RVXS	P1V-S4060B
72368	E2B060ZN458MK2	26KAAW17MEX	P1V-S4060B
72532	E2B060ZNMK2	26KAAW17MPN	P1V-S4060F
72686	E2E125T300NMK2	26KAAW17MPNS_01	P1V-S4060F
72694	E2E125ZNMK2	26KAAW17MPNS_08	P1V-S4120B

72712	E2H040ZNMK3	26KAAW17MPNS_10	P1V-S4120B
72846	E2H060ZNMK2	26KAAW17MPX	P1V-S4120F
72874	E2K1RZN	26KAAW17MPXB	P1V-S4120F
72890	E2K1SZN	26KAAW17MPXS	P1ZM016SAN0150B
73001	E2K1Z260N	26KAAW17MPXS_06	P1ZM016SAN0150B
73061	E2K1Z295N	26KAAW17MPXS_15	P1ZM016SAN0610B
73062	E2K1ZN	26KAAW17MPXS_25	P1ZM016SAN0610B
73084	E32-0011 KL	26KAAW17MPXS_26	P1ZM016SAN1000WFMN
73159	E32-0018 KL	26KAAW17MPXS_38	P1ZM016SAN1000WFMN
73186	E321F32	26KAAW17MPXS_99	P1ZM020GHN0350B
73191	E321F32	26KAAW17MSXS	P1ZM020GHN0350B
73194	E321F3202	26KAAW17MVN	P1ZM020SAN1000WFBN
73308	E321F3202	26KAAW17MVX	P1ZM020SAN1000WFBN
73311	E321F3202-2995-481865C2	26KAAW17MVXS	P1ZM025GCN0400B
73384	E321F3202-2995-481865C2	26KAAW17RVX	P1ZM025GCN0400B
73545	E321F3202-492190C2	26KAAW17RVXS	P1ZM025GHN1200WNBL
73547	E321F3202-492190C2	26KAAW21MEX	P1ZM025GHN1200WNBL
73759	E321F32-2995-481865C2	26KAAW21MPC	P1ZM025SAN0280B
74076	E321F32-2995-481865C2	26KAAW21MPN	P1ZM025SAN0280B
74077	E321F32-2995-482722P6	26KAAW21MPNS	P1ZM025SAN0420B
74078	E321F32-2995-482722P6	26KAAW21MPNS_06	P1ZM025SAN0420B
74933	E321F32-2995-495870C2	26KAAW21MPNS_09	P1ZM025SAN0692B
2107-2-2	E321F32-2995-495870C2	26KAAW21MPX	P1ZM025SAN0692B
2107-2-4	E321F32-4270-481000C2	26KAAW21MPXB	P1ZM025SAN1000WFBN
2107-4-4	E321F32-4270-481000C2	26KAAW21MPXS	P1ZM025SAN1000WFBN
2107-4-6	E321G36	26KAAW21MPXS_08	P1ZM025SAN1300B
2107-6-4	E321G36	26KAAW21MPXS_17	P1ZM025SAN1300B
2107-6-6	E321G3606	26KAAW21MPXS_18	P1ZM025SAN1560WFBN
2107-6-8	E321G3606	26KAAW21MPXS_29	P1ZM025SAN1560WFBN
2107-8-6	E321G3606-2995-481865C2	26KAAW21MPXS_35	P1ZM025SAN1560WLBN
2107-8-8	E321G3606-2995-481865C2	26KAAW21MPXS_36	P1ZM025SAN1560WLBN
2107-8-12	E321G3606-492190C2	26KAAW21MPXS_99	P1ZM032GCN0200WNBC
2107-12-8	E321G3606-492190C2	26KAAW21MVN	P1ZM032GCN0200WNBC
2107-12-12	E321G3610	26KAAW21MVX	P1ZM032SAN0250B
82220	E321G3610	26KAAW21MVXS	P1ZM032SAN0250B
83014	E321G3610-4270-481000C2	26KAAW21RVX	P1ZM032SAN1035B
83030	E321G3610-4270-481000C2	26KAAW21RVXS	P1ZM032SAN1035B
83103	E321G36-2995	26KAIM14MPN	P1ZM032TCN0350B
84386	E321G36-2995	26KAIM14MPX	P1ZM032TCN0350B
84394	E321G36-2995-4818653D	26KAIM16MPN	P1ZM032TCN0425B
84765	E321G36-2995-4818653D	26KAIM16MPX	P1ZM032TCN0425B
84766	E321G36-2995-481865C2	26KAIM18MPN	P1ZM032TCN0520B
84768	E321G36-2995-481865C2	26KAIM18MPX	P1ZM032TCN0520B
85361	E321G37	26KAIN13MPX	P1ZM040GCN0200WNBC
85362	E321G37	26KAIW10MPX	P1ZM040GCN0200WNBC
85363	E321G3706	26KAIW10MPXS	P1ZM040SAN0710B
85364	E321G3706	26KAIW13MEX	P1ZM040SAN0710B
85365	E321G3706-2995-4818653D	26KAIW13MPN	P1ZM040SAN0730B
87993	E321G3706-2995-4818653D	26KAIW13MPNS	P1ZM040SAN0730B
88160	E321G3706-2995-481865C2	26KAIW13MPNS_03	P1ZM040SAN0740B
90089	E321G3706-2995-481865C2	26KAIW13MPNS_05	P1ZM040SAN0740B
91020	E321G3706-492190C2	26KAIW13MPX	P1ZM040SAN0800B
91020	E321G3706-492190C2	26KAIW13MPXB	P1ZM040SAN0800B

101768	E321G3710	26KAIW13MPXS	P1ZM040SAN1000B
101789	E321G3710	26KAIW13MPXS_06	P1ZM040SAN1000B
102244	E321G3710-2995-4818653D	26KAIW13MPXS_11	P1ZM040TCN0200WNBC
102244	E321G3710-2995-4818653D	26KAIW13MPXS_14	P1ZM040TCN0200WNBC
102248	E321G3710-2995-481865A5	26KAIW13MPXS_29	P1ZM040TCN0230WNBL
102248	E321G3710-2995-481865A5	26KAIW13MPXS_99	P1ZM040TCN0230WNBL
102256	E321G3710-2995-481865C2	26KAIW13MVX	P1ZM040TCN0425WNBC
102256	E321G3710-2995-481865C2	26KAIW13MVXS_02	P1ZM040TCN0425WNBC
102257	E321G3710-495905C2	26KAIW13RVX	P1ZM040TCN0650WNBH
102257	E321G3710-495905C2	26KAIW13RVXS	P1ZM040TCN0650WNBH
102264	E321G3710-495905F4	26KAIW17MPN	P2-000-0803N
102264	E321G3710-495905F4	26KAIW17MPNS	P2-060-0224N
102265	E321G37-2995-481865A2	26KAIW17MPNS_02	P2-060-0224V
102265	E321G37-2995-481865A2	26KAIW17MPX	P2-060-0226-07N
102276	E321G37-2995-481865C2	26KAIW17MPXB	P2-060-0806-02N
102276	E321G37-2995-481865C2	26KAIW17MPXS	P2060C000009
102278	E321G37-4270-4810000A	26KAIW17MPXS_06	P2060C000010
102278	E321G37-4270-4810000A	26KAIW17MPXS_11	P2060C000016
102289	E321G38	26KAIW17MPXS_13	P2060L00C1C20LA20N00S1B1U
102289	E321G38	26KAIW17MPXS_26	P2060L83B1B14LA20N00S1B1U
102290	E321G3806	26KAIW17MPXS_99	P2060R00B1B20LA20N00S1B1U
102290	E321G3806	26KAIW17MVN	P2060R00B1B32TC25N61S1B1U
102291	E321G3806-2995-481865C2	26KAIW17MVX	P2060R00C1C12LA20N00S1B1U
102291	E321G3806-2995-481865C2	26KAIW17RVX	P2060R00C1C20LA20N00B1B1U
102292	E321G3806-4270-481000C2	26KAIW17RVXS	P2060R00C1C22LA20N00S1H1P
102292	E321G3806-4270-481000C2	26KAIW21MEX	P2060R00C1C24LA20N00A1B1P
102294	E321G3810	26KAIW21MPN	P2060R00C1C32LA20N00A1B1U
102294	E321G3810	26KAIW21MPNS	P2060R75B2B25TA20N20S1B1U
102301	E321G3810-2995-4818653D	26KAIW21MPNS_02	P2-075-0213-01N
102301	E321G3810-2995-4818653D	26KAIW21MPX	P2-075-0213-02N
102302	E321G3810-2995-481865C2	26KAIW21MPXB	P2-075-0213-02V
102302	E321G3810-2995-481865C2	26KAIW21MPXS	P2075C000009
102306	E321G38-2995-4818653D	26KAIW21MPXS_05	P2075L00B2C25LA20N00S1B1U
102306	E321G38-2995-4818653D	26KAIW21MPXS_12	P2075L00C1C28LA35V00S1B1U
102312	E321G38-2995-481865C2	26KAIW21MPXS_99	P2075L00C1C30LA30N00B1B1U
102312	E321G38-2995-481865C2	26KAIW21MVX	P2075R00C1C10LA20N00S1B1U
102313	E321G39	26KAIW21RVX	P2075R00C1C20LA20N00S1B1P
102363	E321G39	26KAIW21RVXS	P2075R00C1C22LA20N00T1B1P
102368	E321G3906	26KAKK06MPX	P2075R00C1C25LA20N00A1A1U
102368	E321G3906	26KAKK08MPN	P2075R00C1C25TA20N20S1A1U
102369	E321G3906-2995-481865C2	26KAKK08MPX	P2075R00C1C31TA20N60S1B1U
102369	E321G3906-2995-481865C2	26KAKK08MPXS_01	P2075R00C1C31TB20N40S1B1P
102370	E321G3906-495905F4	26KAKK10MPN	P2075R00C1C32TC20N90A1B1U
102370	E321G3906-495905F4	26KAKK10MPX	P2075R00C1C32TC20N90B1B1U
102373	E321G3910	26KAKK10MPXS_01	P2-105-0216-02N
102373	E321G3910	26KAKK12MPN	P2-105-0217-02N
102376	E321G3910-2995-4818653D	26KAKK12MPX	P2-105-0218-02N
102376	E321G3910-2995-4818653D	26KAKK12MPXS_01	P2-105-0221-04
102379	E321G39-2995-4818653D	26KAKO06MPN	P2-105-0224N
102379	E321G39-2995-4818653D	26KAKO06MPX	P2-105-0225-36
102380	E321G39-2995-481865C2	26KAKO06MPXS	P2-105-0227-30
102380	E321G39-2995-481865C2	26KAKO06MPXS_01	P2-105-0229-19
102385	E321G39-4270-486265C2	26KAKO08MPN	P2-105-0229-20

102385	E321G39-4270-486265C2	26KAKO08MPX	P2-105-3304
102394	E321G39-495905F4	26KAKO08MPXS_02	P2105C000011
102394	E321G39-495905F4	26KAKO08MPXS_03	P2105C000023
102495	E321G40	26KAKO08MPXS_05	P2105C000024
102495	E321G40	26KAKO08MVN	P2105C000028
102498	E321G4006	26KAKO08MVX	P2105C000037
102498	E321G4006	26KAKO08RVXS	P2105L00C1C20LA20N00T1B1U
102592	E321G4006-2995-4827253D	26KAKO10MPN	P2105L00C1C24LA20N00S1B1U
102592	E321G4006-2995-4827253D	26KAKO10MPNS	P2105L00C1C30LA25N00A1B1U
102603	E321G4010	26KAKO10MPX	P2105L85C1C32LA20N00C1B1U
102603	E321G4010	26KAKO10MPXS_02	P2105R00C1C10RA20N00C3A1U
102609	E321G4010-2995-481865C2	26KAKO10MPXS_03	P2105R00C1C22LA20N00A1B1P
102610	E321G4010-2995-481865C2	26KAKO10RVXS	P2105R00C1C23LA20D00A1B1P
102610	E321H11	26KAKO12MPN	P2105R00C1C23LA20N00A1B1P
102917	E321H11	26KAKO12MPX	P2105R00C1C25LA20N00S1B1U
103861	E321H11-2995-4818653D	26KAKO12MPXS_03	P2105R00C1C25LA25N00S1B1U
105706	E321H11-2995-4818653D	26KAKO12MPXS_04	P2105R00C1C25TA18N44T1B1U
105706	E321H11-2995-481865C2	26KATF06MEX	P2105R00C1C28TD20N60S1B1U
105709	E321H11-2995-481865C2	26KATF06MEXS_02	P2105R00C1C30LA25N00S1B1U
105709	E321H11-4270-4810003D	26KATF06MPN	P2105R00C1C32LA20N00B1B1U
105710	E321H11-4270-4810003D	26KATF06MPNS	P2105R00C1C32TC15N50S1B1P
105710	E321H11-4270-481000C2	26KATF06MPNS_03	P2105R00C2C28TD20N60C3B1U
105899	E321H11-4270-481000C2	26KATF06MPX	P2105R00C5C20LA15N00S1B1U
0111.065	E321H11-4538-481000A2	26KATF06MPXB	P2-145-0212N
2207-4-4	E321H11-4538-481000A2	26KATF06MPXS	P2-145-0216-02N
2207-6-6	E321H11-4833710A	26KATF06MPXS_07	P2-145-0217-02N
2207-8-8	E321H11-4833710A	26KATF06MPXS_12	P2-145-0218-02N
2207-12-12	E321H13	26KATF06MPXS_14	P2-145-0221-05
116090	E321H13	26KATF06MPXS_25	P2-145-0221-46N
117849	E321H13-2995-4818653D	26KATF06MPXS_99	P2-145-0222-06
117850	E321H13-2995-4818653D	26KATF06MVCS	P2-145-0222-08
117851	E321H13-2995-481865C2	26KATF06MVX	P2-145-0226-06N
117852	E321H13-2995-481865C2	26KATF06MVXS_02	P2-145-0227-07
117853	E321H15	26KATF06RVX	P2-145-0227-30
117854	E321H15	26KATF06RVXS	P2-145-0227-31
118017	E321H15-2995-4818653D	26KATF08MEX	P2-145-0229-19
118080	E321H15-2995-4818653D	26KATF08MPN	P2-145-0229-21
118200	E321H15-2995-481865A5	26KATF08MPNS	P2-145-0230N
118201	E321H15-2995-481865A5	26KATF08MPNS_04	P2-145-0238-36
118202	E321H15-2995-481865C2	26KATF08MPX	P2-145-0238-40
118204	E321H15-2995-481865C2	26KATF08MPXB	P2-145-0238-60
118205	E321H15-2995-481865J3	26KATF08MPXS	P2-145-0807-01N
118206	E321H15-2995-481865J3	26KATF08MPXS_02	P2-145-2008-118
118225	E321H15-4270-4810000A	26KATF08MPXS_99	P2145C000025
118226	E321H15-4270-4810000A	26KATF08RVX	P2145C000027
118227	E321H15-4270-481000C2	26KATF09MEX	P2145C000036
118231	E321H15-4270-481000C2	26KATF09MPN	P2145C000037
118753	E321H15-4270-481000C7	26KATF09MPNS	P2145C000040
118770	E321H15-4270-481000C7	26KATF09MPX	P2145C000050
118773	E321H15-4270-486265C2	26KATF09MPXB	P2145L00D1D26LA20N00S1B1P
0121.030	E321H15-4270-486265C2	26KATF09MPXS	P2145R00C1C32TA20N51S1B1U
0121.901	E321H15-492190C2	26KATF09MPXS_07	P2145R00D1C28TA20N36C4B1U
0121.917	E321H15-492190C2	26KATF09MPXS_13	P2145R00D1D10LA20N00S1B1U

0122.031	E321H15-495905C2	26KATF09MPXS_15	P2145R00D1D25LA25N00S1B1U
0122.032	E321H15-495905C2	26KATF09MPXS_26	P2145R00D1D25TA20N55D3B2P
0122.205	E321H15-495905E5	26KATF09MPXS_99	P2145R00D1D28TC22N65B1B1P
0122.206	E321H15-495905E5	26KATF09MVN	P2145R00D1D32TC21D64C1B1P
0122.800	E321H21-2995-481865C2	26KATF09MVX	P2145R00D1D35LA20N00S1B1P
0122.801	E321H21-2995-481865C2	26KATF09MVXS_02	P2145R00D3D35TA20N29B1B1U
0122.916	E321H21-4270-486265C2	26KATF09RVX	P-25
123462	E321H21-4270-486265C2	26KATF09RVXS	P25111
129136	E321H23	26KATF10MPN	P2514
129140	E321H23	26KATF10MPNS	P2518
129144	E321H23-2995-4818653D	26KATF10MPX	P25201
129592	E321H23-2995-4818653D	26KATF10MPXB	P2522
0131.040	E321H23-4270-481044F4	26KATF10MPXS_02	P2523
0131.048	E321H23-4270-481044F4	26KATF10MPXS_99	P2531
0131.051	E321H23-4270-4851003D	26KATF10MVX	P2538
0131.052	E321H23-4270-4851003D	26KATF10REX	P25L
131263	E321H23-4270-486265A5	26KATF10RVX	P26-27316-H
131264	E321H23-4270-486265A5	26KATF10RVXS	P26-30491-H
131265	E321H25	26KATF13MEX	P26-30778-H
131266	E321H25	26KATF13MPN	P26-30801-H
0131.913	E321H25-2995-4818653D	26KATF13MPNS	P26-37025-H
0132.039	E321H25-2995-4818653D	26KATF13MPX	P26-37073-H
132070	E321H25-2995-481865A2	26KATF13MPXB	P26-37512-H
132071	E321H25-2995-481865A2	26KATF13MPXS	P26-37618-0
132099	E321H25-2995-481865C2	26KATF13MPXS_03	P26-38220-P
132100	E321H25-2995-481865C2	26KATF13MPXS_15	P26-38328-D
132128	E321H25-4270	26KATF13MPXS_16	P26-38328-DL
132291	E321H25-4270	26KATF13MPXS_20	P26-38393-H
132297	E321H25-4270-4810003D	26KATF13MVX	P26-38467-P
132505	E321H25-4270-4810003D	26KATF13RVX	P26-38680-H
132680	E321H25-4270-481000C2	26KATF13RVXS	P26-38728-H
132746	E321H25-4270-481000C2	26KATP06MPN	P26-38834-H
133284	E321H25-4270-486265A7	26KATP06MPX	P26-38869-H
135682	E321H25-4270-486265A7	26KATP06MPXS_01	P26-39117-H
135684	E321H25-4270-486265C1	26KATP10MPX	P26-39187-P
135686	E321H25-4270-486265C1	26KATP10MPXS_02	P26-39247-H
135692	E321H25-4270-486265C2	26KATP13MPN	P26-57990-H
135696	E321H25-4270-486265C2	26KATP13MPX	P26-65234-H
135700	E321H25-4270-486265F4	26KATP13MPXS_01	P26-65235-H
135701	E321H25-4270-486265F4	26KATS06MPN	P26-65242-H
135703	E321H25-4270-486265S2	26KATS06MPNS	P26-65244-A
135704	E321H25-4270-486265S2	26KATS06MPX	P26-65244-H
135705	E321H25-495905C2	26KATS06MPXS	P26-65265-H
135712	E321H25-495905C2	26KATS08MPN	P26-65266-H
136733	E321H25-495905F4	26KATS08MPX	P26-65269-H
136736	E321H25-495905F4	26KATS08MPXS	P26-65270-H
136804	E321K10	26KATS10MPN	P26-65274-H
136806	E321K10	26KATS10MPX	P26-65274-K
136816	E321K10-2995-481865C2	26KATS10MPXS	P26-65284-H
136851	E321K10-2995-481865C2	26KBAD14MVC	P26-65295-H
136991	E321K10-2995-483510S5	26KBAD16MPX	P26-65296-H
136993	E321K10-2995-483510S5	26KBAD18MPN	P26-65297-H
139504	E321K13	26KBAD18MPX	P26-65298-H

143447	E321K13	26KBAK17MPN	P26-65300-D
143448	E321K13-2995-4818653D	26KBAW10MPN	P26-65304-H
143449	E321K13-2995-4818653D	26KBAW10MPX	P26-65305-H
143450	E321K13-2995-481865A5	26KBAW10MPXS	P26-65307-H
143451	E321K13-2995-481865A5	26KBAW13MEX	P26-65308-H
143452	E321K13-2995-481865J3	26KBAW13MEXS_02	P26-65309-H
143453	E321K13-2995-481865J3	26KBAW13MPN	P26-65313-G
143454	E321K13-2995-481865K8	26KBAW13MPNS	P26-65313-H
143455	E321K13-2995-481865K8	26KBAW13MPX	P26-65315-A
143456	E321K13-4270-4810003D	26KBAW13MPXS	P26-65315-G
143457	E321K13-4270-4810003D	26KBAW13MVN	P26-65315-H
143458	E321K13-4538-481000C2	26KBAW13MVX	P26-65316-H
143459	E321K13-4538-481000C2	26KBAW13RVXS	P26-65317-H
143460	E321K15	26KBAW17MPN	P26-65319-H
143461	E321K15	26KBAW17MPX	P26-65326-H
143462	E321K1503	26KBAW17MPXS	P26-65328-G
143463	E321K1503	26KBAW17MPXS_01	P26-65328-H
143464	E321K1503-2995-4818653D	26KBAW17MVN	P26-65329-H
143465	E321K1503-2995-4818653D	26KBAW17MVX	P26-65331-H
143467	E321K1503-2995-481865C2	26KBAW21MEN	P26-65332-H
143477	E321K1503-2995-481865C2	26KBAW21MPN	P26-65333-H
143478	E321K1503-2995-4834664P	26KBAW21MPNS	P26-65334-H
143479	E321K1503-2995-4834664P	26KBAW21MPX	P26-65334-K
143480	E321K1503-4270-4810003D	26KBAW21MPXS	P26-65336-A
143481	E321K1503-4270-4810003D	26KBAW21MVN	P26-65336-H
143482	E321K1514-4270-4810004K	26KBAW21MVX	P26-65338-G
143483	E321K1514-4270-4810004K	26KBAW21RVXS	P26-65338-H
143484	E321K15-2995-4818653D	26KBIM16MPN	P26-65340-H
143485	E321K15-2995-4818653D	26KBIM16MPX	P26-65343-H
143646	E321K15-2995-481865C2	26KBIM18MPX	P26-65345-H
143647	E321K15-2995-481865C2	26KBIN13MPN	P26-65347-H
143648	E321K15-4270-486265C2	26KBIW13MPN	P26-65359-H
143649	E321K15-4270-486265C2	26KBIW13MPNS_02	P26-65381-P
143650	E321K25-2995-481865C2	26KBIW13MPX	P26-65382-P
143651	E321K25-2995-481865C2	26KBIW13MPXS	P26-65388-S
143653	E321K63-4270-481044A7	26KBIW13MVX	P26-65397-S
143654	E321K63-4270-481044A7	26KBIW13RVXS	P26-65407-P
144808	E32-55V	26KBIW17MPC	P26-65407-S
144809	E32-59A	26KBIW17MPN	P26-65414-B
144810	E32-59V	26KBIW17MPNS	P26-65423-X
144811	E32SA1-075M05-06003-01123	26KBIW17MPNS_01	P26-65424-P
144812	E32SA1-075M05-06003-01123	26KBIW17MPX	P26-65428-B
144813	E32SA1-099M06-07303-09A30	26KBIW17MPXS	P26-65428-C
144814	E32SA1-099M06-07303-09A30	26KBIW17MVX	P26-65429-P
144815	E32SA1-100M06-08004-01430	26KBIW21MEN	P26-65429-S
144816	E32SA1-100M06-08004-01430	26KBIW21MEX	P26-65441-0
144817	E32SA2-044S04-03504-01225	26KBIW21MPN	P26-65446-0
145239	E32SA2-044S04-03504-01225	26KBIW21MPNS	P26-65449-0
145240	E32SA2-063M05-04003-00920	26KBIW21MPX	P26-65449-5
145241	E32SA2-063M05-04003-00920	26KBIW21MVX	P26-65453-0
145242	E32SC1-044S04-03505-01225	26KBIW21RVXS	P26-65455-0
145243	E32SC1-044S04-03505-01225	26KBKK08MPN	P26-65539-H
145244	E32SD2-044S04-03504-01225	26KBKK08MPX	P26-65540-H

145245	E32SD2-044S04-03504-01225	26KBKK10MPN	P26-65541-H
145254	E331B01	26KBKK10MPX	P26-65544-H
145255	E331B01	26KBKK12MPN	P26-65551-H
145256	E331B01-2995-4818653D	26KBKK12MPX	P26-65555-H
145257	E331B01-2995-4818653D	26KBKO08MPN	P26-65611-P
145258	E331B01-2995-481865A5	26KBKO08MPX	P26-65619-P
145259	E331B01-2995-481865A5	26KBKO08MPXS	P26-65627-P
145260	E331B01-2995-481865C2	26KBKO10MPN	P26-65633-P
145261	E331B01-2995-481865C2	26KBKO10MPNS	P26-65636-P
145262	E331B01-2995-495870C2	26KBKO10MPX	P26-65642-P
145263	E331B01-2995-495870C2	26KBKO12MPN	P26-65646-P
145530	E331B01-4270-4810000A	26KBKO12MPX	P26-65651-P
145531	E331B01-4270-4810000A	26KBTF06MEX	P26-65701-P
145532	E331B01-4270-481000C2	26KBTF06MPN	P26-67396-H
145533	E331B01-4270-481000C2	26KBTF06MPNS	P26-67413-P
145534	E331B01-4270-481000C7	26KBTF06MPX	P26-67617-P
145535	E331B01-4270-481000C7	26KBTF06MPXS	P26-67663-H
145536	E331B01-4270-4851003D	26KBTF08MPN	P26-67958-H
145537	E331B01-4270-4851003D	26KBTF08MPX	P26-70026-H
145538	E331B01-483371C2	26KBTF09MPN	P26-70173-H
145600	E331B01-483371C2	26KBTF09MPNS	P26-70176-H
145601	E331B01-492190P9	26KBTF09MPX	P26-70282-H
145602	E331B01-492190P9	26KBTF09MPXS	P26-70323-H
145603	E331B01-495905C2	26KBTF09MVX	P26-70755-W
145604	E331B01-495905C2	26KBTF10MPN	P26-70835-P
145605	E331B21	26KBTF10MPX	P26-70839-H
145606	E331B21	26KBTF10MPXS	P26-70844-H
145607	E331B21-2995-4818653D	26KBTF13MPN	P26-70853-H
145608	E331B21-2995-4818653D	26KBTF13MPX	P26-70896-0
148723	E331B21-2995-481865A2	26KBTF13MPXS	P26-71161-S
148724	E331B21-2995-481865A2	26KBTF13MVX	P26-71180-G
148725	E331B21-2995-481865A5	26KBTF13RVXS	P26-71218-0
148726	E331B21-2995-481865A5	26KBTP06MPX	P26-71263-H
148729	E331B21-2995-481865C2	26KBTP10MPX	P26-71265-H
148730	E331B21-2995-481865C2	26KBTP13MPX	P26-71274-H
148731	E331B21-4270-4810000A	26KBTS06MPN	P26-71352-H
148733	E331B21-4270-4810000A	26KBTS06MPX	P26-71392-0
148734	E331B21-4270-481000A2	26KBTS08MPN	P26-71458-H
148737	E331B21-4270-481000A2	26KBTS08MPX	P26-71570-H
148741	E331B21-4270-481000C2	26KBTS10MPN	P26-71737-H
149335	E331B21-4270-481000C2	26KBTS10MPX	P26-71837-H
00150097	E331B21-4270-485100C2	26KBVG12MPNS_01	P26-71965-H
00150102	E331B21-4270-485100C2	26KEAW13MPN	P26-75538-H
00152955	E331B21-495905C2	26KEAW13MPNS	P26-95010-H
00153062	E331B21-495905C2	26KEAW13MPNS_99	P26-95016-H
00153065	E331B74	26KEAW17MPN	P26-95104-H
00153071	E331B74	26KEAW17MPNS	P26-95288-5
00153083	E331B74-2995-482725C2	26KEAW21MPN	P26-95428-H
00153084	E331B74-2995-482725C2	26KEAW21MPNS	P26-95788-P
00153124	E331B74-4538	26KEAW21MPNS_99	P26-96070-C
00153131	E331B74-4538	26KEIW13MPN	P26-96100-H
00153436	E331B74-4538-4810003D	26KEIW13MPNS	P26-96102-H
00153561	E331B74-4538-4810003D	26KEIW13MPNS_99	P26-96119-0

00153862	E331B74-4538-4810004K	26KEIW13MPNS_99	P26-96145-H
00154032	E331B74-4538-4810004K	26KEIW17MPN	P26-96255-H
00154034	E331B74-495905F4	26KEIW17MPNS	P26-96272-P
00154053	E331B74-495905F4	26KEIW17MPNS_99	P26-96281-0
165787	E331L21	26KEIW17MPNS_99	P26-96460-H
165790	E331L21	26KEIW21MPN	P26-96461-H
165791	E331L21-2995-481865C2	26KEIW21MPNS	P26-96587-H
165792	E331L21-2995-481865C2	26KETF06MPN	P26-96597-H
166295	E331L21-2995-481865C4	26KETF06MPNS	P26-96602-H
168513	E331L21-2995-481865C4	26KETF08MPN	P26-96607-H
170936	E331L21-2995-481865J3	26KETF08MPNS	P26-96609-H
170937	E331L21-2995-481865J3	26KETF09MPN	P26-96929-0
170939	E332B01	26KETF09MPNS	P26-99151-G
175285	E332B01	26KETF10MPN	P26-99157-H
175286	E332B01-2995-4818653D	26KETF10MPNS	P26-99176-D
181396	E332B01-2995-4818653D	26KETF10MPNS_99	P26-99198-H
184129	E332B01-2995-481865A5	26KETF13MPN	P26-99200-H
184660	E332B01-2995-481865A5	26KETF13MPNS	P26-99202-P
184662	E332B01-2995-481865C5	26KFAD16MPX	P26-99204-H
184687	E332B01-2995-481865C5	26KFAW10MPCS_02	P26-99207-H
184694	E332B01-4270-481000C2	26KFAW10MPX	P26-99212-H
184758	E332B01-4270-481000C2	26KFAW10MPXS_05	P26-99489-H
184760	E332B21	26KFAW13MPN	P26-99500-H
184762	E332B21	26KFAW13MPX	P26-99502-H
184775	E332B21-2995-481865A5	26KFAW13MPXS_01	P26-99527-H
184777	E332B21-2995-481865A5	26KFAW13MVX	P26-99529-H
203008	E332B21-2995-481865C2	26KFAW13RVX	P26-99548-H
203008	E332B21-2995-481865C2	26KFAW17MPC	P26-99550-H
203028	E341B01	26KFAW17MPN	P26-99622-H
203028	E341B01	26KFAW17MPNS_01	P26-99679-HL
203029	E341B01-2995-4818653D	26KFAW17MPX	P26-99683-H
203029	E341B01-2995-4818653D	26KFAW17MPXS	P26-99721-H
203030	E341B01-4270-4810003D	26KFAW17MPXS_04	P26-99738-H
203030	E341B01-4270-4810003D	26KFAW21MPN	P26-99762-H
203034	E341B01-4270-481000C2	26KFAW21MPX	P26-99778-P
203034	E341B01-4270-481000C2	26KFAW21MVX	P26-99784-G
203035	E341B01-4538-4810003D	26KFAW21RVX	P26-99818-H
203035	E341B01-4538-4810003D	26KFIW13MPN	P26-99830-H
203040	E341B11	26KFIW13MPX	P26-99839-C
203040	E341B11	26KFIW17MPN	P26-99855-H
203049	E341B21	26KFIW17MPX	P26-99864-H
203049	E341B21	26KFIW21MPN	P26-99865-H
203050	E341B21-2995-4818653D	26KFIW21MPNS	P26-99866-H
203050	E341B21-2995-4818653D	26KFIW21MPX	P26-99871-H
203054	E341B21-2995-481865C2	26KFTF06MPX	P26-99894-P
203054	E341B21-2995-481865C2	26KFTF08MPX	P26-99900-H
203055	E341B21-2995-4827253D	26KFTF09MPX	P26-99957-H
203055	E341B21-2995-4827253D	26KFTF09MPXS_01	P2B-169-12-T-20-V
203117	E341B21-4270-4810003D	26KFTF10MPX	P2B-169-16-S-20
203117	E341B21-4270-4810003D	26KFTF10MVX	P2D/3002366
203216	E341L01	26KFTF13MPN	P2D/3002366
203216	E341L01	26KFTF13MPNS_01	P2D8V32C5
203254	E341L01-2995-4818653D	26KFTF13MPX	P2D8V32C5

203254	E341L01-2995-4818653D	26KFTF13MPXS	P2E-HS32C2
203256	E341L01-2995-481865A2	26KFTF13RVX	P2E-HS32C2
203256	E341L01-2995-481865A2	26MAH16RH16	P2E-HV31C1
203257	E341L01-2995-481865A5	26MAH4RH16	P2E-HV31C1
203257	E341L01-2995-481865A5	26MAH6RH16	P2E-HV31F1
203261	E341L01-2995-481865A9	26MAH9RH16	P2E-HV31F1
203261	E341L01-2995-481865A9	26MARH12RH16	P2E-HV32C1
204381	E341L01-2995-481865C2	26MARH16RH16	P2E-HV32C1
204381	E341L01-2995-481865C2	26MARH9RH16	P2E-HV32C2
204628	E341L01-2995-481865C4	26P1-107042011	P2E-HV32C2
204628	E341L01-2995-481865C4	26P1-107052011	P2E-HV32D1
206298	E341L01-2995-481865J3	26P2-107042011	P2E-HV32D1
206298	E341L01-2995-481865J3	26SFAD12MXX	P2E-KD027SS3
206301	E341L01-2995-4827303D	26SFAD14MXN	P2E-KD027SS3
206301	E341L01-2995-4827303D	26SFAD14MXX	P2E-KP025PM3
206303	E341L01-2995-482730C2	26SFAD16MXN	P2E-KP025PM3
206303	E341L01-2995-482730C2	26SFAD16MXX	P2E-KP026PM3
206304	E341L01-2995-483510S5	26SFAD18MXN	P2E-KP026PM3
206304	E341L01-2995-483510S5	26SFAD18MXX	P2E-KS12C1
206306	E341L01-2995-495875C2	26SFAD18MXXS	P2E-KS12C1
206306	E341L01-2995-495875C2	26SFAD22MXX	P2E-KS31C0
206307	E341L01-4270-4810003D	26SFAK17MXXS	P2E-KS31C0
206307	E341L01-4270-4810003D	26SFAN10MXX	P2E-KS31C1
206312	E341L01-4270-481000C2	26SFAN13MXN	P2E-KS31C1
206312	E341L01-4270-481000C2	26SFAN13MXX	P2E-KS31C2
2507-4-4	E341L02	26SFAN13MXX0	P2E-KS31C2
2507-6-6	E341L02	26SFAN13MXX3	P2E-KS31F0
2507-8-8	E341L02-2995-4818653D	26SFAN13MXX6	P2E-KS31F0
2507-12-12	E341L02-2995-4818653D	26SFAN13MXX8	P2E-KS31F1
223335	E341L02-2995-481865A2	26SFAN17MXN	P2E-KS31F1
223336	E341L02-2995-481865A2	26SFAN17MXX	P2E-KS31F2
223337	E341L02-2995-4827303D	26SFAN17MXX6	P2E-KS31F2
223338	E341L02-2995-4827303D	26SFAN17MXX8	P2E-KS31J1
223339	E341L02-2995-482730C2	26SFAW10MXN	P2E-KS31J1
223476	E341L02-2995-482730C2	26SFAW10MXX	P2E-KS31J2
230166	E341L1130	26SFAW10MXXS_02	P2E-KS31J2
230168	E341L1130	26SFAW13MXC	P2E-KS32B0
231218	E341L1130-2995-481865C4	26SFAW13MXN	P2E-KS32B0
233942	E341L1130-2995-481865C4	26SFAW13MXN0	P2E-KS32B1
233943	E341L1130-4270-4810000A	26SFAW13MXN3	P2E-KS32B1
233944	E341L1130-4270-4810000A	26SFAW13MXN6	P2E-KS32B2
233945	E341L1130-483371C2	26SFAW13MXN8	P2E-KS32B2
233953	E341L1130-483371C2	26SFAW13MXNS	P2E-KS32C0
233954	E341L21	26SFAW13MXX	P2E-KS32C0
233961	E341L21	26SFAW13MXX0	P2E-KS32C1
233964	E341L21-2995-481865A5	26SFAW13MXX3	P2E-KS32C1
233973	E341L21-2995-481865A5	26SFAW13MXX6	P2E-KS32C1Q
233978	E341L21-2995-481865C2	26SFAW13MXX8	P2E-KS32C1Q
233981	E341L21-2995-481865C2	26SFAW13MXXS_04	P2E-KS32C2
233982	E341L21-4270-481000C2	26SFAW17MXN	P2E-KS32C2
233999	E341L21-4270-481000C2	26SFAW17MXN0	P2E-KS32C4
234002	E341L21-4538-481000C2	26SFAW17MXN3	P2E-KS32C4
234008	E341L21-4538-481000C2	26SFAW17MXN6	P2E-KS32D1

234011	E-342Z	26SFAW17MXN8	P2E-KS32D1
234055	E-343Z	26SFAW17MXN8S	P2E-KS32D2
234063	E347L1130	26SFAW17MXX	P2E-KS32D2
234211	E347L1130	26SFAW17MXX0	P2E-KS34D1
234214	E-393-Z-KOMPL.	26SFAW17MXX3	P2E-KS34D1
234293	E3A060TNMK2	26SFAW17MXX6	P2E-KV11C2
234295	E3B060T200-270GVMK2	26SFAW17MXX8	P2E-KV11C2
234301	E3B060T220-240GVMK2	26SFAW17MXXS_04	P2E-KV12C1
234353	E3B060T315-315NMK2	26SFAW17MXXS_05	P2E-KV12C1
234613	E-413-Z-KOMPL.	26SFAW17MXXS_11	P2E-KV31C0
234687	E43224N3578	26SFAW21MXC	P2E-KV31C0
234747	E43224N3578	26SFAW21MXN	P2E-KV31C1
234777	E46353N3578	26SFAW21MXN8	P2E-KV31C1
234798	E46353N3578	26SFAW21MXNS_01	P2E-KV31C2
234852	E4755018	26SFAW21MXX	P2E-KV31C2
234985	E50SA1-062S05-05205-01630	26SFAW21MXXS_02	P2E-KV31F0
234993	E50SA1-062S05-05205-01630	26SFDS26MXN	P2E-KV31F0
247740	E50SA1-070S05-04003-01440	26SFDS26MXX	P2E-KV31F1
247741	E50SA1-070S05-04003-01440	26SFIM14MXN	P2E-KV31F1
247811	E50SA1-080M05-06003-01430	26SFIM14MXX	P2E-KV31F2
247815	E50SA1-080M05-06003-01430	26SFIM16MXN	P2E-KV31F2
247816	E50SA1-095M06-05003-01430	26SFIM16MXX	P2E-KV31J0
254467	E50SA1-095M06-05003-01430	26SFIM18MXN	P2E-KV31J0
254470	E50SA1-100M06-08003-01430	26SFIM18MXX	P2E-KV31J1
254793	E50SA1-100M06-08003-01430	26SFIN13MXN	P2E-KV31J1
254794	E50SA2-090M06-07304-01940	26SFIN13MXX	P2E-KV31J2
254795	E50SA2-090M06-07304-01940	26SFIN13MXX0	P2E-KV31J2
256090	E50SA2-100M06-08004-01430	26SFIN13MXX3	P2E-KV32B0
256617	E50SA2-100M06-08004-01430	26SFIN13MXX6	P2E-KV32B0
256720	E50SC1-062S06-05205-01640	26SFIN13MXX8	P2E-KV32B1
256781	E50SC1-062S06-05205-01640	26SFIN17MXX8	P2E-KV32B1
256790	E57	26SFIW10MXN	P2E-KV32B2
257774	E6A060Z350NMK2	26SFIW10MXX	P2E-KV32B2
258037	E6A060ZN409	26SFIW13MXC	P2E-KV32C0
258042	E6B020ZN	26SFIW13MXD	P2E-KV32C0
258139	E6B040ZNMK3	26SFIW13MXN	P2E-KV32C1
258152	E6B060Z230N409	26SFIW13MXN0	P2E-KV32C1
258193	E6B060Z270N409	26SFIW13MXN3	P2E-KV32C2
258194	E6B060Z340N409	26SFIW13MXN6	P2E-KV32C2
258203	E6B060Z350N409	26SFIW13MXN8	P2E-KV32C3
258210	E6B060ZN409	26SFIW13MXNS_02	P2E-KV32C3
258211	E6B060ZNMK2	26SFIW13MXX	P2E-KV32C4
258214	E6K020ZN	26SFIW13MXX0	P2E-KV32C4
258219	E6K1ZN	26SFIW13MXX3	P2E-KV32D0
258220	E83	26SFIW13MXX6	P2E-KV32D0
258283	E-86-0100	26SFIW13MXX8	P2E-KV32D1
258315	EA12-58E	26SFIW17MXC	P2E-KV32D1
258326	EA4-58V	26SFIW17MXD	P2E-KV32D2
258328	EA8-58E	26SFIW17MXN	P2E-KV32D2
258329	EA8-59E	26SFIW17MXN0	P2E-KV34D0
258333	EAB10C015GE12A	26SFIW17MXN3	P2E-KV34D0
258352	EAB10C015GS12	26SFIW17MXN6	P2E-KV34D1
258362	EAB10C015HC73A	26SFIW17MXN8	P2E-KV34D1

258366	EAB10P020GE16	26SFIW17MXX	P2E-KV34D2
258370	EAB10P020HC73	26SFIW17MXX0	P2E-KV34D2
258371	EAB10P020HC73A	26SFIW17MXX3	P2E-MS35C3
258474	EAB10P020HC73V2	26SFIW17MXX6	P2E-MS35C3
258475	EAB10Q010HC73	26SFIW17MXX8	P2E-MS35C4
258476	EAB20C015GE16A	26SFIW17MXXS_02	P2E-MS35C4
258481	EAB20C015GE16V2	26SFIW17MXXS_07	P2E-MV15C/3004005
258501	EAB20C015GS12A	26SFIW21MXN	P2E-MV15C/3004005
258532	EAB20C015HC73A	26SFIW21MXX	P2E-MV15C1
258533	EAB20C015HC73V2A	26SFIW21MXXS_07	P2E-MV15C1
258534	EAB20P020GE12A	26SFKK06MXN	P2E-MV35B1
258535	EAB20P020GE16	26SFKK06MXX	P2E-MV35B1
258536	EAB20P020GE16A	26SFKK08MXN	P2E-MV35C0
258540	EAB20P020GE16V2	26SFKK08MXX	P2E-MV35C0
258568	EAB20P020GE16V2A	26SFKK10MXN	P2E-MV35C1
258579	EAB20P020GS12A	26SFKK10MXX	P2E-MV35C1
258612	EAB20P020HC73	26SFKK12MXN	P2E-MV35C3
258641	EAB20P020HC73A	26SFKK12MXX	P2E-MV35C3
258673	EAB20P020HC73V2	26SFKO06MXN	P2E-MV35C4
258674	EAB20P020HC73V2A	26SFKO06MXNS	P2E-MV35C4
258675	EAB20P020ME33	26SFKO06MXX	P2E-MV35C4Q72
258702	EAB20P020ME33A	26SFKO08MXC	P2E-MV35C4Q72
258738	EAB20Q010GE12A	26SFKO08MXN	P2E-MV35D3
258740	EAB20Q010GE16V2A	26SFKO08MXN0	P2E-MV35D3
258756	EAB20Q010GS12A	26SFKO08MXN3	P2E-MV35E0
258770	EAB20Q010HC73	26SFKO08MXN6	P2E-MV35E0
258793	EAB20Q010HC73A	26SFKO08MXN8	P2E-MV35E1
258825	EAC10C015	26SFKO08MXNS_01	P2E-MV35E1
258934	EAC10P020	26SFKO08MXX	P2E-MV35E3
258953	EAC10Q010	26SFKO08MXX0	P2E-MV35E3
258990	EAC20C015	26SFKO08MXX3	P2E-MV35W1
259024	EAC20P020	26SFKO08MXX6	P2E-MV35W1
259074	EAC20Q010	26SFKO08MXX8	P2E-QV31C1
259075	EAM03/01	26SFKO08MXXS	P2E-QV31C1
259088	EAM03/02	26SFKO08MXXS_01	P2E-QV31C3
259103	EAM04/01	26SFKO10MXN	P2E-QV31C3
259123	EAM05/01	26SFKO10MXX	P2E-QV31F1
259214	EAM06/01	26SFKO12MXN	P2E-QV31F1
259238	EAM06/02	26SFKO12MXX	P2E-QV31J1
259319	EARG-10	26SFKO12MXXS_01	P2E-QV31J1
259326	EARG-20	26SFKU10MXN	P2E-QV31J3
259336	EARG-4	26SFKU12MXN	P2E-QV31J3
259337	EB8/S	26SFKU13MXN	P2E-QV31J4
259338	EBMB10	26SFTF04MXN	P2E-QV31J4
259340	EBMB12	26SFTF04MXX	P2E-QV32C0
259341	EBMB14	26SFTF06MXC	P2E-QV32C0
259346	EBMB16	26SFTF06MXCS	P2E-QV32C1
259439	EBMB4	26SFTF06MXN	P2E-QV32C1
259486	EBMB6	26SFTF06MXN0	P2E-QV32C2
259517	EBMB8	26SFTF06MXN3	P2E-QV32C2
259540	EBPL8/10	26SFTF06MXN6	P2E-QV32C3
259564	EBRAB12	26SFTF06MXN8	P2E-QV32C3
259568	EBRAB14	26SFTF06MXX	P2E-QV32C4

259651	EBZ 10-10-SS	26SFTF06MXX0	P2E-QV32C4
259662	EBZ 12-12-SS	26SFTF06MXX3	P2FA22-15
259688	EBZ 16-16-SS	26SFTF06MXX6	P2FA22-15
259690	EBZ 20-20-SS	26SFTF06MXX8	P2FC6419
259751	EBZ 25-25-SS	26SFTF06MXXS_02	P2FC6419
259803	EBZ 6-6-SS	26SFTF08MXN	P2FC7419
259807	EBZ 8-8-SS	26SFTF08MXX	P2FC7419
259814	ECR800S2	26SFTF09MXC	P2FCA440
259878	ECRM10-316	26SFTF09MXN	P2FCA440
259961	ECRM10-6MO	26SFTF09MXN0	P2FCA442
260049	ECRM10-B	26SFTF09MXN3	P2FCA442
260083	ECRM12-316	26SFTF09MXN6	P2FCA445
260101	ECRM12-6MO	26SFTF09MXN8	P2FCA445
260102	ECRM12-B	26SFTF09MXNS_02	P2FCA447
260144	ECRM12-IIY	26SFTF09MXX	P2FCA447
260182	ECRM12-M	26SFTF09MXX0	P2FCA448
260187	ECRM12-NNR	26SFTF09MXX3	P2FCA448
260188	ECRM14-316	26SFTF09MXX6	P2FCA449
260192	ECRM15-316	26SFTF09MXX8	P2FCA449
260231	ECRM16-316	26SFTF10MXN	P2FCA453
260232	ECRM18-316	26SFTF10MXX	P2FCA453
260239	ECRM18-6MO	26SFTF10MXX6	P2FCA457
260250	ECRM20-316	26SFTF10MXX8	P2FCA457
260293	ECRM25-316	26SFTF10MXXS	P2FCA469
260298	ECRM3-316	26SFTF13MXN	P2FCA469
260313	ECRM6-316	26SFTF13MXN0	P2FCA471
260322	ECRM6-6MO	26SFTF13MXN3	P2FCA471
260323	ECRM6-B	26SFTF13MXN6	P2FCA472
260392	ECRM6-IIY	26SFTF13MXN8	P2FCA472
260467	ECRM6-NNR	26SFTF13MXX	P2FCA474
260468	ECRM8-316	26SFTF13MXX0	P2FCA474
260493	ECRM8-B	26SFTF13MXX3	P2FCB249
260559	ED00-104	26SFTF13MXX6	P2FCB249
260644	ED1/2EPDMX	26SFTF13MXX8	P2FCB442
260651	ED1/2VITX	26SFTP06MXN	P2FCB442
260669	ED1/2X	26SFTP06MXX	P2FCB445
260674	ED10X1EPDMX	26SFTP06MXXS_01	P2FCB445
260675	ED10X1VITX	26SFTP10MXN	P2FCB447
260688	ED10X1X	26SFTP10MXX	P2FCB447
260753	ED12X1.5VITX	26SFTP10MXXS_01	P2FCB448
260755	ED12X1.5X	26SFTP13MXN	P2FCB448
260756	ED14X1.5EPDMX	26SFTP13MXX	P2FCB449
260757	ED14X1.5VITX	26SFTP13MXXS_01	P2FCB449
260759	ED14X1.5X	26SFTS06MXN	P2FCB451
260795	ED16X1.5VITX	26SFTS06MXN6	P2FCB451
260853	ED16X1.5X	26SFTS06MXX	P2FCB453
261034	ED18X1.5VITX	26SFTS06MXX0	P2FCB453
261044	ED18X1.5X	26SFTS06MXX3	P2FCB457
261053	ED20X1.5VITX	26SFTS06MXX6	P2FCB457
261080	ED20X1.5X	26SFTS06MXX8	P2FCG447
261122	ED22X1.5VITX	26SFTS08MXN	P2FCG447
261163	ED22X1.5X	26SFTS08MXX	P2FND
261191	ED24X1.5VITX	26SFTS09MXX3	P2FND

261231	ED26X1.5EPDMX	26SFTS09MXX6	P2FNP
261233	ED26X1.5VITX	26SFTS09MXX8	P2FNP
261242	ED26X1.5X	26SFTS10MXN	P2FNS
261255	ED3/8EPDMX	26SFTS10MXX	P2FNS
261268	ED3/8VITX	26SFTS13MXN0	P2FP13H4D
261269	ED3/8X	26SFTS13MXN6	P2FP13H4D
261289	ED33X2EPDMX	26SFTS13MXX0	P2FP13N4C
261304	ED33X2VITX	26SFTS13MXX6	P2FP13N4C
261314	ED33X2X	26SFVG08MXX	P2FP13N4D
261324	ED42X2/R11/4EPDMX	26SRAW13MXX	P2FP13N4D
261355	ED42X2VITX	26SRAW13MXXS	P2FP23N4A
261366	ED42X2X	26SRIW13MXX	P2FP23N4A
261370	ED48X2EPDMX	26SRIW17MXX	P2FP23N4B
261410	ED48X2VITX	26SRIW21MXX	P2FP23N4B
261411	ED48X2X	26SRTF06MXN	P2FP23N4C
261418	ED60X2VITX	26SRTF06MXX	P2FP23N4C
261420	ED60X2X	26SRTF08MXN	P2FP43M4A
261428	ED8X1VITX	26SRTF08MXX	P2FP43M4A
261429	ED8X1X	26SRTF09MXN	P2FP43M4B
261453	E-DC	26SRTF09MXX	P2FP43M4B
261479	EDV01	26SRTF10MXN	P2FS13A3DM49
261480	EE12X	26SRTF10MXX	P2FS13A3DM49
261500	EE15X	26SRTF13MXN	P2FSB3A3L549
262089	EE208/408X	26SRTF13MXX	P2FSB3A3L549
262093	EE20X	26SSAW13MXN	P2FSB3A3LT49
262098	EE210/410X	26SSAW13MXX	P2FSB3A3LT49
264572	EE212.7/412.7X	26SSAW21MXN	P2L-AV511VV
265030	EE212/412X	26SSIW13MXN	P2L-AV511VV
265197	EE215/415X	26SSIW17MXN	P2LAX/3002483
265384	EE216/416X	26SSIW17MXX	P2LAX/3002483
265385	EE218/418X	26SSTF08MXN	P2LAX311EEHDDB49
265392	EE25X	2700-25-00150-0000-000000	P2LAX311EEHDDB49
265393	EE30X	2700-25-00150-0000-000000	P2LAX311ESHDDB49
265399	EE320/620X	2700-25-00170-0000-000000	P2LAX311ESHDDB49
265404	EE321.3/621.3X	2700-25-00170-0000-000000	P2LAX311ESNDDN
265412	EE322/622X	2700-25-00175-0000-000000	P2LAX311ESNDDN
265438	EE325/625X	2700-25-00175-0000-000000	P2LAX311ESNXB549
265439	EE326.9/626.9X	2700-25-00189-0000-000000	P2LAX311ESNXB549
265450	EE328/628X	2700-25-00189-0000-000000	P2LAX311ESNXXX
265451	EE330/630X	2700-25-00195-0000-000000	P2LAX311ESNXXX
265489	EE35X	2700-25-00195-0000-000000	P2LAX311PP
265493	EE38X	2700-25-00200-0000-000000	P2LAX311PP
265497	EE42X	2700-25-00200-0000-000000	P2LAX311PS
265498	EE435X	2700-25-00200-3000-000000	P2LAX311PS
265499	EE451X	2700-25-00200-3000-000000	P2LAX311VS
265501	EE90-104X526	2700-25-00250-0000-000000	P2LAX311VS
265504	EE92-104X526	2700-25-00250-0000-000000	P2LAX511EDNXXX
265509	EEM10-316	2700-25-00280-0000-000000	P2LAX511EDNXXX
265510	EEM10-6MO	2700-25-00280-0000-000000	P2LAX511EE
265522	EEM10-B	2700-25-00300-0000-000000	P2LAX511EE
265524	EEM10-IIY	2700-25-00300-0000-000000	P2LAX511EEADDM49
265532	EEM10-M	2700-25-00350-0000-000000	P2LAX511EEADDM49
265543	EEM10-NNR	2700-25-00350-0000-000000	P2LAX511EEHDDB49

265546	EEM10-TTZ	2700-25-00450-0000-000000	P2LAX511EEHDDB49
265552	EEM12-316	2700-25-00450-0000-000000	P2LAX511EEHDDN
265570	EEM12-6MO	2700-25-00500-0000-000000	P2LAX511EEHDDN
265593	EEM12-6MO-NC	2700-25-00500-0000-000000	P2LAX511EENDDB49
265596	EEM12-B	2700-25-00650-0000-000000	P2LAX511EENDDB49
265625	EEM12-IIY	2700-25-00650-0000-000000	P2LAX511EENDDN
265643	EEM12-M	2700-25-00850-0000-000000	P2LAX511EENDDN
265659	EEM12-NNR	2700-25-00850-0000-000000	P2LAX511EENXB549
265680	EEM12-TTZ	2700-25-00850-3000-000000	P2LAX511EENXB549
265683	EEM14-316	2700-25-00850-3000-000000	P2LAX511EENXXX
265685	EEM14-MMX	2700-25-00900-0100-000000	P2LAX511EENXXX
265686	EEM15-316	2700-25-00900-0100-000000	P2LAX511EPNDDN
265761	EEM15-B	2700-25-01000-0000-000000	P2LAX511EPNDDN
265944	EEM16-316	2700-25-01000-0000-000000	P2LAX511EPNXXX
266030	EEM16-6MO	2700-25-01820-3000-000000	P2LAX511EPNXXX
266064	EEM16-MMX	2700-25-01820-3000-000000	P2LAX511ES
271117	EEM16-TTZ	2700-25-02760-0000-022200	P2LAX511ES
271118	EEM18-316	2700-25-02760-0000-022200	P2LAX511ESADDM49
271119	EEM18-6MO	2700-25-03250-0000-000000	P2LAX511ESADDM49
271120	EEM18-B	2700-25-03250-0000-000000	P2LAX511ESHDDB49
271121	EEM18-TTZ	2700-25-03800-0000-000000	P2LAX511ESHDDB49
271122	EEM20-316	2700-25-03800-0000-000000	P2LAX511ESHDDN
271123	EEM20-6MO	2700-25-04000-0100-000000	P2LAX511ESHDDN
272724	EEM20-6MO-NC	2700-25-04000-0100-000000	P2LAX511ESNDCB49
277295	EEM22-316	2700-25-04100-0000-000000	P2LAX511ESNDCB49
277297	EEM22-B	2700-25-04100-0000-000000	P2LAX511ESNDCN
277299	EEM25-316	2702FIL	P2LAX511ESNDCN
277301	EEM25-6MO	2702FIL	P2LAX511ESNDDB42
277303	EEM25-IIY	2706FIL	P2LAX511ESNDDB42
00282132	EEM25-MMX	2706FIL	P2LAX511ESNDDB49
00282246	EEM25-NNR	2707FIL	P2LAX511ESNDDB49
00282505	EEM25-TTZ	2707FIL	P2LAX511ESNDDB57
303463	EEM3-316	2708FIL	P2LAX511ESNDDB57
303463	EEM4-316	2708FIL	P2LAX511ESNDDN
303771	EEM6-316	270GAHVP-D5XD	P2LAX511ESNDDN
303771	EEM6-316-OXY	270GBHVP-D5XD	P2LAX511ESNXA548
303775	EEM6-6MO	270GBHVP-D5XY	P2LAX511ESNXA548
303775	EEM6-6MO-NC	270XAAKP-D4XK	P2LAX511ESNXB549
303776	EEM6-B	270XDAJP-D3XY	P2LAX511ESNXB549
303776	EEM6-IIY	2713FIL	P2LAX511ESNXXX
303777	EEM6-M	2713FIL	P2LAX511ESNXXX
303777	EEM6-NNR	2714FIL	P2LAX511PP
303780	EEM6-TTZ	2714FIL	P2LAX511PP
303780	EEM8-316	271GBHVP-B3XY	P2LAX511PP-EX
303781	EEM8-6MO	271GBHVP-D5XK	P2LAX511PP-EX
303781	EEM8-B	271GBHVP-D5XY	P2LAX511PS
303782	EEM8-M	271MBAJP-D5XD	P2LAX511PS
303782	EF.7731111290	271MBAJP-D5XK	P2LAX511PS-EX
303783	EF.7731113122	271MBAJP-D5XY	P2LAX511PS-EX
303783	EF11-HB0	2740-25-00200-0000-000000	P2LAX511VS
303784	EF11-LB0	2740-25-00200-0000-000000	P2LAX511VS
303785	EF11-LB2	2740-25-00300-0000-000000	P2LAX511VS-EX
303785	EF11-LE0	2740-25-00300-0000-000000	P2LAX511VS-EX

303791	EF11-LE0-X807	2740-25-00300-3000-000000	P2LAX511VV
303791	EF31-AB0	2740-25-00300-3000-000000	P2LAX511VV
303818	EF31-AB2	2740-25-00420-0000-000000	P2LAX511VV-EX
303818	EF31-AE0	2740-25-00420-0000-000000	P2LAX511VV-EX
303819	EF31-BB0	2740-25-00420-3000-000000	P2LAX591PP
303819	EF31-BB2	2740-25-00420-3000-000000	P2LAX591PP
303820	EF31-BE0	2740-25-00550-0000-000000	P2LAX61111
303820	EF31-CB0	2740-25-00550-0000-000000	P2LAX61111
303823	EF31-CB2	2740D-025V16	P2LAX61111-EX
303823	EF31-CE0	2740D-025V30	P2LAX61111-EX
303825	EF31-CS0	2740D-03V34	P2LAX61122
303825	EF36-AB0	2740D-03V34-DL	P2LAX61122
303826	EF36-BB0	2740D-03V36	P2LAX61122-EX
303826	EF36-CB0	2740D-05-20M-HPK	P2LAX61122-EX
303827	EF36-DB0	2740D-05V32	P2LAX611EEHDDB49
303827	EF36-DB2	2740D-05V34	P2LAX611EEHDDB49
303828	EF41-BB0	2740D-05V34-DL	P2LAX611EENDDN
303828	EF41-BE0	2740D-08V30	P2LAX611EENDDN
303831	EF41-CB0	2741D-05V34/10	P2LAX611EENXB549
303831	EF41-CB2	2741D-05V34/12	P2LAX611EENXB549
303833	EF41-CE0	2742FIL	P2LAX611EENXXX
303833	EF41-EB0	2742FIL	P2LAX611EENXXX
303834	EF41-EB2	2744FIL	P2LAX611PP
303834	EF41-EE0	2744FIL	P2LAX611PP
303835	EF41-FB0	2748D-05V34	P2LAX71111
303835	EF41-FB2	2748D-05V34/16	P2LAX71111
303836	EF41-FE0	2748D-05V34/16-DL	P2LAX71122
303836	EF42-MB0	2751FIL	P2LAX71122
303861	EF46-BB0	2751FIL	P2LAX711EENDDB49
303861	EF46-BE0	2755FIL	P2LAX711EENDDB49
303863	EF46-DB0	2755FIL	P2LAX711EENDDN
303863	EF46-FB0	2773FIL	P2LAX711EENDDN
303890	EF46-GB0	2773FIL	P2LAX711EENXB549
303890	EF46-GB2	277SBFJP-D5XY	P2LAX711EENXB549
303916	EF7731110120	277SDFJP-D5XY	P2LAX711EENXXX
303916	EF7731110121	277SGFJP-D5XD	P2LAX711EENXXX
303918	EF7731110220	277SGFJP-D5XX	P2LAX711PP
303918	EF7731110221	277SGFJP-D5XY	P2LAX711PP
303933	EF7731111120	277XBFJP-D5XK	P2LAX81111
303933	EF7731111121	277XBFJP-D5XX	P2LAX81111
303934	EF7731111220	277XBFJP-D5XY	P2LAX81111-EX
303934	EF7731111221	277XBFJW-D5ZY	P2LAX81111-EX
303937	EF7731112120	277XDFJP-D5AC	P2LAX81122
303937	EF7731112121	277XDFJP-D5XK	P2LAX81122
304004	EF7731112220	277XDFJP-D5XX	P2LAX81122-EX
304004	EF7731112221	277XDFJP-D5XY	P2LAX81122-EX
304008	EF7731113120	277XDFJW-D5ZY	P2LAX811EE
304008	EF7731113121	277XGFJP-D5XD	P2LAX811EE
304010	EF7731113220	277XGFJP-D5XK	P2LAX811EEHDDB49
304010	EF7731113221	277XGFJP-D5XX	P2LAX811EEHDDB49
304011	EF7731114120	277XGFJP-D5XY	P2LAX811EENDDB49
304011	EF7731114121	277XGFJR-D5XD	P2LAX811EENDDB49
304012	EF7731114220	277XGFJW-D5ZY	P2LAX811EENDDN

304012	EF7731114221	277XMFJP-D5AC	P2LAX811EENDDN
304014	EF81-EB0	277XMFJP-D5XD	P2LAX811EENXB549
304014	EF81-EE0	277XMFJP-D5XY	P2LAX811EENXB549
304014	EF81-FB0	277XMFJP-H5AC	P2LAX811EENXXX
304014	EF81-FB2	278SMFJP-D3XY	P2LAX811EENXXX
304016	EF81-FE0	278XSFJP-D3XK	P2LAX811PP
304016	EF81-HB0	278XTFJP-D3XD	P2LAX811PP
304018	EF81-HB2	27KAAK13MPN	P2LAX811PP-EX
304018	EF81-HE0	27KAAK13MPNS	P2LAX811PP-EX
304020	EF82-NB0	27KAAK17BVN	P2LAXN11EENDDN
304020	EF96-EB0	27KAAK17MPN	P2LAXN11EENDDN
304054	EF96-HB0	27KAAK17MPNS_04	P2LAXN11EENXXX
304054	EF96-HB2	27KAAK17MPNS_09	P2LAXN11EENXXX
304060	EG10-1/2B	27KAAK17MPX	P2LAXN11EPNDDN
304060	EG10-1/4B	27KAAK21BPN	P2LAXN11EPNDDN
304062	EG10-1/8B	27KAAK21BVN	P2LAXN11EPNXXX
304062	EG10-3/8B	27KAAK21MPN	P2LAXN11EPNXXX
304064	EG12X15-1/4B	27KAAK21MPNS_01	P2LAXN11ESHDDN
304064	EG12X15-1/8B	27KAAK21MPNS_02	P2LAXN11ESHDDN
304066	EG15-1/2B	27KAAK21MPNS_03	P2LAXN11ESNDDB49
304066	EG15-3/8B	27KAAK21MPNS_07	P2LAXN11ESNDDB49
304068	EG18-1/2B	27KAAK21MPX	P2LAXN11ESNDDN
304068	EG18-3/4B	27KAAK21MVN	P2LAXN11ESNDDN
304070	EG6-1/4B	27KAAK26BPN	P2LAXN11ESNXXX
304070	EG6-1/8B	27KAAK26BPX	P2LAXN11ESNXXX
304098	EG8-1/4B	27KAAK26MEN	P2LAXP11EENDDN
304098	EGE06L1/8NPTCF	27KAAK26MPN	P2LAXP11EENDDN
304100	EGE06LMED71	27KAAK26MPNS_02	P2LAXQ11EENDDN
304100	EGE06LMEDCF	27KAAK26MVN	P2LAXQ11EENDDN
304102	EGE06LMEDVITCF	27KAAN21MPN	P2LAXR11EENDDN
304102	EGE06LR1/4ED71	27KAAN21MPX	P2LAXR11EENDDN
304102	EGE06LR1/4EDCF	27KAAW13RVX	P2LAXSK1
304102	EGE06LR1/4EDVITCF	27KAAW17EVX	P2LAXSK1
304104	EGE06LRED71	27KAAW17MEN	P2LAXSK2
304104	EGE06LREDCF	27KAAW17MPN	P2LAXSK2
304112	EGE06LREDVITCF	27KAAW17MVN	P2LAZ311EENDCB49
304112	EGE06S1/4NPTCF	27KAAW17RVX	P2LAZ311EENDCB49
304135	EGE06SMED71	27KAAW17RVXS	P2LAZ311ESNDCB49
304135	EGE06SMEDCF	27KAAW21BVN	P2LAZ311ESNDCB49
304156	EGE06SRED71	27KAAW21EVX	P2LAZ511EENDCB49
304156	EGE06SREDCF	27KAAW21MPN	P2LAZ511EENDCB49
304164	EGE06SREDVITCF	27KAAW21MPX	P2LAZ511EENDCN
304164	EGE08L1/4NPT71	27KAAW21REX	P2LAZ511EENDCN
304254	EGE08L1/4NPTCF	27KAAW21RVX	P2LAZ511ESNDCB49
304254	EGE08LM14X1.5EDCF	27KAAW21RVXS	P2LAZ511ESNDCB49
304256	EGE08LMED71	27KAAW26BVN	P2LAZ511ESNDCN
304256	EGE08LMEDCF	27KAAW26EEXS	P2LAZ511ESNDCN
304260	EGE08LMEDVITCF	27KAAW26EVX	P2L-BV512ES
304260	EGE08LR1/2EDCF	27KAAW26MPX	P2L-BV512ES
304264	EGE08LR1/8EDCF	27KAAW26RVX	P2L-BV512PS
304264	EGE08LR3/8EDCF	27KAAW26RVXS	P2L-BV512PS
304272	EGE08LR3/8EDVITCF	27KAIN17MPN	P2LBX312ESNDDB49
304272	EGE08LRED71	27KAIN21MPN	P2LBX312ESNDDB49

304274	EGE08LREDCF	27KAIW13MPN	P2LBX312ESNDDN
304274	EGE08LREDNBR71	27KAIW13RVX	P2LBX312ESNDDN
304280	EGE08LREDVITCF	27KAIW17EEX	P2LBX312ESNXB549
304280	EGE08S1/4NPTCF	27KAIW17EVX	P2LBX312ESNXB549
304379	EGE08S1/4NPTVITCF	27KAIW17MED	P2LBX312JJ
304379	EGE08SMED71	27KAIW17MPN	P2LBX312JJ
304381	EGE08SMEDCF	27KAIW17MPNS	P2LBX312PS
304381	EGE08SMEDVITCF	27KAIW17MPNS_03	P2LBX312PS
304382	EGE08SR1/8EDCF	27KAIW17MPNS_05	P2LBX312VV
304382	EGE08SR3/8EDCF	27KAIW17MVN	P2LBX312VV
304390	EGE08SRED	27KAIW17MVNS_01	P2LBX512EEADDM49
304390	EGE08SRED71	27KAIW17RVX	P2LBX512EEADDM49
304396	EGE08SREDCF	27KAIW17RVXS	P2LBX512EEHDDB49
304396	EGE08SREDVITCF	27KAIW21BPN	P2LBX512EEHDDB49
304396	EGE10L1/4NPT71	27KAIW21EVX	P2LBX512EEHDDN
304396	EGE10L1/4NPTCF	27KAIW21MEN	P2LBX512EEHDDN
304398	EGE10L1/8NPTCF	27KAIW21MPN	P2LBX512EENDCN
304398	EGE10LM12X1.5EDCF	27KAIW21MPNS_06	P2LBX512EENDCN
304398	EGE10LM12X1.5EDVITCF	27KAIW21MPNS_09	P2LBX512EENDDA72
304398	EGE10LMED71	27KAIW21MPX	P2LBX512EENDDA72
304500	EGE10LMEDCF	27KAIW21MVN	P2LBX512EENDDB49
304500	EGE10LMEDVITCF	27KAIW21RVX	P2LBX512EENDDB49
304639	EGE10LR1/2EDCF	27KAIW21RVXS	P2LBX512EENDDB57
304639	EGE10LR3/8ED71	27KAIW26BPNS	P2LBX512EENDDB57
304641	EGE10LR3/8EDCF	27KAIW26EVX	P2LBX512EENDDN
304641	EGE10LR3/8EDCRCF	27KAIW26MPN	P2LBX512EENDDN
304666	EGE10LR3/8EDVITCF	27KAIW26MPNS_05	P2LBX512EENXB549
304666	EGE10LRED71	27KAIW26MVN	P2LBX512EENXB549
304703	EGE10LREDCF	27KAIW26RVX	P2LBX512EENXXX
304703	EGE10LREDCRCF	27KAIW26RVXS	P2LBX512EENXXX
304729	EGE10LREDMS	27KATF06MPN	P2LBX512EPNDDB49
304729	EGE10LREDVITCF	27KATF08EVX	P2LBX512EPNDDB49
304762	EGE10S1/4NPTCF	27KATF08MPN	P2LBX512ESHDDA72
304762	EGE10S3/8NPTCF	27KATF09EVX	P2LBX512ESHDDA72
304850	EGE10SMED71	27KATF09MPN	P2LBX512ESHDDB48
304850	EGE10SMEDCF	27KATF09MPNS_04	P2LBX512ESHDDB48
304900	EGE10SMEDVITCF	27KATF09RVX	P2LBX512ESHDDB49
304900	EGE10SR1/4ED71	27KATF10EVX	P2LBX512ESHDDB49
304910	EGE10SR1/4EDCF	27KATF10MPN	P2LBX512ESHDDN
304910	EGE10SR1/4EDVITCF	27KATF10MPNS_06	P2LBX512ESHDDN
304915	EGE10SRED71	27KATF13BPN	P2LBX512ESNDCN
304915	EGE10SRED71N	27KATF13BVN	P2LBX512ESNDCN
304915	EGE10SREDCF	27KATF13EVX	P2LBX512ESNDDB49
304915	EGE10SREDVITCF	27KATF13MPN	P2LBX512ESNDDB49
304945	EGE12L3/8NPTCF	27KATF13MPNS_04	P2LBX512ESNDDB57
304945	EGE12LM12X1.5EDCF	27KATF13MPNS_06	P2LBX512ESNDDB57
304950	EGE12LM18X1.5EDCF	27KATF13MPNS_09	P2LBX512ESNDDN
304950	EGE12LM22EDCF	27KATF13MPX	P2LBX512ESNDDN
305000	EGE12LM22EDVITCF	27KATF13MVN	P2LBX512ESNXB549
305000	EGE12LM22X1.5ED71	27KATF13RVX	P2LBX512ESNXB549
305283	EGE12LMED71	27KATF13SPN	P2LBX512ESNXB557
305283	EGE12LMEDCF	27KATF16BVN	P2LBX512ESNXB557
309008	EGE12LMEDVITCF	27KATF16EVX	P2LBX512ESNXXX

309008	EGE12LR1/2ED71	27KATF16MPN	P2LBX512ESNXXX
309828	EGE12LR1/2EDCF	27KATF16RVX	P2LBX512PP
309828	EGE12LR1/2EDVITCF	27KATF19EVX	P2LBX512PP
321268	EGE12LR1/4ED71	27KATF19MPN	P2LBX512PS
322623	EGE12LR1/4EDCF	27KATF19MPNS	P2LBX512PS
329152	EGE12LR1/4EDVITCF	27KATF19MPNS_04	P2LBX512PS-EX
331449	EGE12LRED71	27KATF19MPX	P2LBX512PS-EX
332466	EGE12LREDCF	27KATF19RVX	P2LBX512VS
336941	EGE12LREDVITCF	27KBAK13BPN	P2LBX512VS
10-2829	EGE12S1/2NPTCF	27KBAK13BPX	P2LBX51NESNDDN
12-2829	EGE12S3/8NPT71	27KBAK17BEC	P2LBX51NESNDDN
341020	EGE12S3/8NPTCF	27KBAK17BPN	P2LBX61211
341874	EGE12SM16X1.5EDCF	27KBAK17BPNS	P2LBX61211
342092	EGE12SMED71	27KBAK17BPNS_02	P2LBX61222
342547	EGE12SMEDCF	27KBAK17BPX	P2LBX61222
343498	EGE12SMEDVITCF	27KBAK17BVN	P2LBX612EEADDM49
343791	EGE12SR1/2ED71	27KBAK21BPN	P2LBX612EEADDM49
343811	EGE12SR1/2EDCF	27KBAK21BPX	P2LBX612EEHDDB49
347142	EGE12SR1/2EDVITCF	27KBAK21BVN	P2LBX612EEHDDB49
347859	EGE12SR1/4ED71	27KBAK21MPN	P2LBX612EEHDDN
348611	EGE12SR1/4EDCF	27KBAK21MPX	P2LBX612EEHDDN
349068	EGE12SR1/4EDVITCF	27KBAK26BEN	P2LBX612EENDCB49
352798	EGE12SRED71	27KBAK26BPC	P2LBX612EENDCB49
4-2866	EGE12SREDCF	27KBAK26BPN	P2LBX612EENDCN
6-2866	EGE12SREDVITCF	27KBAK26BPNS	P2LBX612EENDCN
353966	EGE14S1/2NPT71	27KBAK26BPX	P2LBX612EENDDB49
355310	EGE14S1/2NPTCF	27KBAK26BVN	P2LBX612EENDDB49
360475	EGE14SMED71	27KBAK26MPN	P2LBX612EENXB549
360475	EGE14SMEDCF	27KBAN21MPN	P2LBX612EENXB549
360476	EGE14SRED71	27KBAN21MPX	P2LBX612EENXXX
360476	EGE14SREDCF	27KBAW13REXS	P2LBX612EENXXX
361810	EGE14SREDVITCF	27KBAW13RVX	P2LBX612PP
361810	EGE15L1/2NPT71	27KBAW17EVX	P2LBX612PP
361850	EGE15L1/2NPTCF	27KBAW17MPX	P2LBX71222
361850	EGE15L1/2NPTVITCF	27KBAW17MVN	P2LBX71222
361910	EGE15L1/4NPTCF	27KBAW17RVX	P2LBX712EENDDB49
361910	EGE15L3/4NPTCF	27KBAW21BPN	P2LBX712EENDDB49
361950	EGE15LM22X1.5ED71	27KBAW21BPX	P2LBX712EENDDN
361950	EGE15LM22X1.5EDCF	27KBAW21EKX	P2LBX712EENDDN
362262	EGE15LM22X1.5EDVICF	27KBAW21EVX	P2LBX712EENXXX
362262	EGE15LM26X1.5EDCF	27KBAW21MPN	P2LBX712EENXXX
362263	EGE15LMED71	27KBAW21MPX	P2LBX712PP
362263	EGE15LMEDCF	27KBAW21MVN	P2LBX712PP
362264	EGE15LMEDVITCF	27KBAW21MVX	P2LBX81211
362264	EGE15LR3/4EDCF	27KBAW21RVX	P2LBX81211
362265	EGE15LR3/4EDVITCF	27KBAW26BPN	P2LBX81222
362265	EGE15LR3/8ED71	27KBAW26EVX	P2LBX81222
362286	EGE15LR3/8EDCF	27KBAW26MPN	P2LBX81277
362286	EGE15LR3/8EDVITCF	27KBAW26MVN	P2LBX81277
363380	EGE15LRED71	27KBAW26RVX	P2LBX812EEHDDB49
363380	EGE15LREDCF	27KBIN17MPX	P2LBX812EEHDDB49
363435	EGE15LREDMS	27KBIW13BPN	P2LBX812EEHDDN
363435	EGE15LREDVITCF	27KBIW13BPX	P2LBX812EEHDDN

363445	EGE16S1/2NPT71	27KBIW13EVX	P2LBX812EENDCN
363445	EGE16S1/2NPTCF	27KBIW13MVN	P2LBX812EENDCN
363457	EGE16S1/2NPTVITCF	27KBIW13RVX	P2LBX812EENDDB49
363457	EGE16SM20EDVITCF	27KBIW17BEN	P2LBX812EENDDB49
363467	EGE16SMED71	27KBIW17BEX	P2LBX812EENDDN
363467	EGE16SMEDCF	27KBIW17BPN	P2LBX812EENDDN
363745	EGE16SMEDVITCF	27KBIW17BPNS	P2LBX812EENXB549
363745	EGE16SR3/4ED71	27KBIW17BPX	P2LBX812EENXB549
363750	EGE16SR3/4EDCF	27KBIW17BVN	P2LBX812EENXXX
363750	EGE16SR3/8EDCF	27KBIW17EVX	P2LBX812EENXXX
364010	EGE16SRED71	27KBIW17MED	P2LBX812PP
364010	EGE16SREDCF	27KBIW17MPN	P2LBX812PP
364035	EGE16SREDVITCF	27KBIW17MPX	P2LBX812PP-EX
364035	EGE18L1/2NPT71	27KBIW17RVX	P2LBX812PP-EX
364520	EGE18L1/2NPTCF	27KBIW21BEN	P2LBXN12EEHDDN
364520	EGE18LMED71	27KBIW21BEX	P2LBXN12EEHDDN
364525	EGE18LMEDCF	27KBIW21BPN	P2LBXN12EENDDN
364525	EGE18LMEDVITCF	27KBIW21BPX	P2LBXN12EENDDN
364530	EGE18LR1/4EDCF	27KBIW21BVCS	P2LBXN12EENXXX
364530	EGE18LR3/4ED71	27KBIW21BVX	P2LBXN12EENXXX
364535	EGE18LR3/4EDCF	27KBIW21EVX	P2LBXN12EPHDDN
364535	EGE18LR3/4EDVITCF	27KBIW21MEX	P2LBXN12EPHDDN
366501	EGE18LR3/8EDCF	27KBIW21MPN	P2LBXN12EPNXXX
366501	EGE18LRED71	27KBIW21MPNS_01	P2LBXN12EPNXXX
366511	EGE18LREDCF	27KBIW21MPX	P2LBXN12ESNDCN
366511	EGE18LREDCRCF	27KBIW21MVN	P2LBXN12ESNDCN
366521	EGE18LREDMS	27KBIW21REX	P2LBXN12ESNDDN
366521	EGE18LREDNBR71	27KBIW21RVX	P2LBXN12ESNDDN
366531	EGE18LREDVITCF	27KBIW26BEN	P2LBXN12ESNNDB49
366531	EGE18LRSA2OFF71	27KBIW26BPN	P2LBXN12ESNNDB49
366770	EGE20S3/4NPT71	27KBIW26BPNS	P2LBXN12ESNXXX
366770	EGE20S3/4NPTCF	27KBIW26BPX	P2LBXN12ESNXXX
366775	EGE20SMED71	27KBIW26EVX	P2LBXP12EEHDDN
366775	EGE20SMEDCF	27KBIW26MPN	P2LBXP12EEHDDN
378018	EGE20SMEDVITCF	27KBIW26MPX	P2LBXP12EENXXX
378054	EGE20SR1/2ED71	27KBIW26MVX	P2LBXP12EENXXX
378098	EGE20SR1/2EDCF	27KBIW26RVX	P2LBXR12EENDDN
378254	EGE20SR1EDCF	27KBTF06BPN	P2LBXR12EENDDN
378263	EGE20SRED71	27KBTF06BPX	P2LBXR12EENXXX
378316	EGE20SREDCF	27KBTF08BPN	P2LBXR12EENXXX
378337	EGE20SREDNBR71	27KBTF08BPX	P2LBXSK1
378382	EGE20SREDVITCF	27KBTF08MPN	P2LBXSK1
378389	EGE22L3/4NPT71	27KBTF09BEX	P2LBZ312ESNDCB49
378391	EGE22L3/4NPTCF	27KBTF09BPN	P2LBZ312ESNDCB49
378402	EGE22LMED71	27KBTF09BPNS	P2LBZ312ESNDCN
378414	EGE22LMEDCF	27KBTF09BPX	P2LBZ312ESNDCN
378422	EGE22LMEDNBR71	27KBTF09RVX	P2LBZ512EENDCN
378477	EGE22LMEDVITCF	27KBTF10BPN	P2LBZ512EENDCN
378576	EGE22LR1/2ED71	27KBTF10BPX	P2LBZ512ESNDCB49
378769	EGE22LR1/2EDCF	27KBTF10BVN	P2LBZ512ESNDCB49
378774	EGE22LR1EDCF	27KBTF10MVN	P2LBZ512ESNDCN
378811	EGE22LRED71	27KBTF13BEN	P2LBZ512ESNDCN
378840	EGE22LREDCF	27KBTF13BPN	P2LBZ612EENDCB49

378849	EGE22LREDMS	27KBTF13BPNS	P2LBZ612EENDCB49
378856	EGE22LREDVITCF	27KBTF13BPX	P2LCX313ESNDDB49
378881	EGE25S1NPT71	27KBTF13EVX	P2LCX313ESNDDB49
378895	EGE25S1NPTCF	27KBTF13MEN	P2LCX313ESNXB549
378898	EGE25SMED71	27KBTF13MPN	P2LCX313ESNXB549
378966	EGE25SMEDCF	27KBTF13MPX	P2LCX513EEADDM49
378970	EGE25SMEDVITCF	27KBTF13MVN	P2LCX513EEADDM49
379005	EGE25SR3/4EDCF	27KBTF13RVX	P2LCX513EEHDDA72
379038	EGE25SRED71	27KBTF16BPN	P2LCX513EEHDDA72
379042	EGE25SREDCF	27KBTF16BPX	P2LCX513EEHDDB49
379062	EGE25SREDVITCF	27KBTF16EVX	P2LCX513EEHDDB49
379099	EGE28L1NPT71	27KBTF16MPN	P2LCX513EEHDDN
379111	EGE28L1NPTCF	27KBTF16MPX	P2LCX513EEHDDN
379231	EGE28LMED71	27KBTF16RVX	P2LCX513EENDDB49
379242	EGE28LMEDCF	27KBTF19BPN	P2LCX513EENDDB49
379243	EGE28LR3/4ED71	27KBTF19BPX	P2LCX513EENDDN
379258	EGE28LR3/4EDCF	27KBTF19EVX	P2LCX513EENDDN
379280	EGE28LRED71	27KBTF19MPN	P2LCX513EENXB549
379328	EGE28LREDCF	27KBTF19MPX	P2LCX513EENXB549
379335	EGE28LREDI14CF	27KBTF19RVX	P2LCX513EENXXX
379442	EGE28LREDMS	27KDAK21BPXS	P2LCX513EENXXX
379449	EGE28LREDVITCF	27KFAK13MPN	P2LCX513ESHDDB49
379451	EGE30S11/4NPTCF	27KFAK17MVN	P2LCX513ESHDDB49
379465	EGE30SMED71	27KFAK21MENS	P2LCX513ESNDDB49
379484	EGE30SMEDCF	27KFAK21MPN	P2LCX513ESNDDB49
379485	EGE30SMEDVITCF	27KFAK21MVN	P2LCX513ESNDDN
379486	EGE30SR1EDCF	27KFAK26MPN	P2LCX513ESNDDN
379489	EGE30SRED71	27KFAW13RVX	P2LCX513ESNXB549
379502	EGE30SREDCF	27KFAW17RVX	P2LCX513ESNXB549
379504	EGE30SREDNBR71	27KFAW21BVN	P2LCX513ESNXXX
379505	EGE30SREDVITCF	27KFAW21EVX	P2LCX513ESNXXX
379511	EGE35L11/4NPT71	27KFAW21REX	P2LCX513PP
379522	EGE35L11/4NPTCF	27KFIW17MPN	P2LCX513PP
379532	EGE35LMED71	27KFIW17MVN	P2LCX513PS
379547	EGE35LMEDCF	27KFIW21MPN	P2LCX513PS
379555	EGE35LR1EDCF	27KFIW21MVN	P2LCX61311
379556	EGE35LR1EDSA2CF	27KFIW21REX	P2LCX61311
379560	EGE35LR1EDVITCF	27KFIW21RVX	P2LCX61322
379565	EGE35LRED71	27KFIW26MPN	P2LCX61322
379592	EGE35LREDCF	27KFIW26RVX	P2LCX613EENDDB49
379594	EGE35LREDVITCF	27KFTF09RVX	P2LCX613EENDDB49
379595	EGE38S11/2NPT71	27KFTF10BEN	P2LCX613EENXB549
379625	EGE38S11/2NPTCF	27KFTF13MPN	P2LCX613EENXB549
379627	EGE38SMED71	27KFTF13MPX	P2LCX613PP
379633	EGE38SMEDCF	27KFTF13RVX	P2LCX613PP
379639	EGE38SR11/4EDCF	27KFTF19EVX	P2LCX71322
379640	EGE38SRED	27KFTF19MENS	P2LCX71322
379659	EGE38SRED71	27P-15-02H-10	P2LCX713EENXB549
379660	EGE38SREDCF	27SBAK13MPN	P2LCX713EENXB549
379668	EGE38SREDVITCF	27SBAK13MPX	P2LCX81322
379672	EGE42L11/2NPTCF	27SBAK17MENS	P2LCX81322
379688	EGE42LMEDCF	27SBAK17MPN	P2LCX813EEADDM49
379700	EGE42LMEDVITCF	27SBAK17MPX	P2LCX813EEADDM49

379703	EGE42LR11/4EDCF	27SBAK17MVN	P2LCX813EEHDDN
379719	EGE42LRED71	27SBAK21MEN	P2LCX813EEHDDN
379742	EGE42LREDCF	27SBAK21MPN	P2LCX813EENDDB49
379744	EGE42LREDVITCF	27SBAK21MPX	P2LCX813EENDDB49
379746	EGEO06LMCF	27SBAK21MVN	P2LCX813EENDDN
379751	EGEO06LMVITCF	27SBAK26MPN	P2LCX813EENDDN
379776	EGEO08LMCF	27SBAK26MPX	P2LCX813EENXXX
379822	EGEO08SMCF	27SBAK26MVN	P2LCX813EENXXX
379824	EGEO10LMCF	27SBAN17MPN	P2LCX813PP-EX
379828	EGEO10LMVITCF	27SBAW13EVX	P2LCX813PP-EX
379831	EGEO10SMVITCF	27SBAW13MPX	P2LCXDXSK1
379832	EGEO12LMCF	27SBAW13REXS	P2LCXDXSK1
379919	EGEO12LMVITCF	27SBAW13RVX	P2LCXN13EENXB549
379964	EGEO12SMCF	27SBAW17EVX	P2LCXN13EENXB549
380065	EGEO15LMCF	27SBAW17MPN	P2LCXN13ESNXB549
380069	EGEO16SMCF	27SBAW17MPNS	P2LCXN13ESNXB549
380080	EGEO18LMCF	27SBAW17MPX	P2LCXP13EENDDN
390165	EGEO18LMVITCF	27SBAW17MVN	P2LCXP13EENDDN
390165	EGEO20SMCF	27SBAW17RVX	P2LCXQ13EENXB549
390195	EGEO20SMVITCF	27SBAW21EKX	P2LCXQ13EENXB549
390195	EGEO22LM27X2CF	27SBAW21EVX	P2LCZ313ESNDCB49
390300	EGEO22LM27X2VITCF	27SBAW21MEN	P2LCZ313ESNDCB49
390300	EGEO25SMCF	27SBAW21MPN	P2L-DV314EE
390405	EGEO28LMCF	27SBAW21MPNS	P2L-DV314EE
390405	EGEO30SMCF	27SBAW21MPX	P2L-DV314EE6CQ
390445	EGEO35LMCF	27SBAW21MVX	P2L-DV314EE6CQ
390445	EGEO38SMCF	27SBAW21RVX	P2L-DV314PP
390465	EGEO42LMCF	27SBAW26EVX	P2L-DV314PP
390465	EHAX	27SBAW26MPNS	P2L-DV314ZS
390495	EH-SCH-25KE	27SBAW26MPX	P2L-DV314ZS
390495	EHX06KXXKXX_01	27SBAW26RVX	P2L-DV314ZZ
390505	EHX21KXXRXX	27SBIN21MPX	P2L-DV314ZZ
390505	EHX25KXXRXX	27SBIW13EVX	P2L-DV514EE6CQ
390580	EK13/06DX	27SBIW13MPN	P2L-DV514EE6CQ
390580	EK13/06DXS	27SBIW13MPX	P2L-DV514ES6CQ
390705	EK13/06FX	27SBIW13RVX	P2L-DV514ES6CQ
390705	EK13/06FXS	27SBIW17EVX	P2L-DV514PP
390875	EK13/08DX	27SBIW17MED	P2L-DV514PP
390875	EK13/08DXS	27SBIW17MEX	P2L-DV514ZZ
390878	EK13/08FX	27SBIW17MPN	P2L-DV514ZZ
390878	EK13/08FXS	27SBIW17MPNS	P2L-DV614EE
390945	EK504VY	27SBIW17MPX	P2L-DV614EE
390945	EK504VY	27SBIW17MVN	P2L-DV614EE6CQ
390975	EK504Y	27SBIW17RVX	P2L-DV614EE6CQ
390975	EK504Y	27SBIW21EVX	P2L-DV614PP
392355	EK55G	27SBIW21MEN	P2L-DV614PP
392355	EK55G	27SBIW21MEX	P2L-DV714EE
392388	EK55J	27SBIW21MPN	P2L-DV714EE
392388	EK55J	27SBIW21MPNS_01	P2L-DV714EE6CQ
392389	EK602A	27SBIW21MPNS_02	P2L-DV714EE6CQ
392389	EK602A	27SBIW21MPX	P2L-DV814EE
392395	EK602B	27SBIW21MVN	P2L-DV814EE
392395	EK602B	27SBIW21MVX	P2L-DV814EE6CQ

392408	EK602B-BR	27SBIW21REX	P2L-DV814EE6CQ
392408	EK602B-BR	27SBIW21RVX	P2L-DV814PP
395448	EK602G	27SBIW26EVX	P2L-DV814PP
395448	EK602G	27SBIW26MEN	P2LDX/3004003
395452	EK602VB	27SBIW26MPN	P2LDX/3004003
395452	EK602VB	27SBIW26MPNS	P2LDX314EENDDN
395456	EK602Y	27SBIW26MPX	P2LDX314EENDDN
395456	EK602Y	27SBIW26MVN	P2LDX314ESNDDB49
397156	EKF101	27SBIW26REX	P2LDX314ESNDDB49
397156	EKF101	27SBIW26RVX	P2LDX314ESNDDN
398006	EKF10Y	27SBTF06MPN	P2LDX314ESNDDN
398006	EKF10Y	27SBTF06MPX	P2LDX314ESNXB549
398008	EKF20A	27SBTF08MPN	P2LDX314ESNXB549
398008	EKF20A	27SBTF08MPNS	P2LDX314PS
398014	EKF71	27SBTF08MPX	P2LDX314PS
398014	EKF71	27SBTF09EVX	P2LDX514EEADDM49
398016	EL06L71	27SBTF09MEC	P2LDX514EEADDM49
398016	EL06LCF	27SBTF09MPN	P2LDX514EEHDDB49
398022	EL06LCRCF	27SBTF09MPX	P2LDX514EEHDDB49
398022	EL06LMEDOMDCF	27SBTF09MVC	P2LDX514EEHDDN
398028	EL06LOMD71	27SBTF09RVX	P2LDX514EEHDDN
398028	EL06LOMDCF	27SBTF10MPN	P2LDX514EENDDB49
398029	EL06LREDCF	27SBTF10MPNS	P2LDX514EENDDB49
398029	EL06LREDOMDCF	27SBTF10MPX	P2LDX514EENDDN
398030	EL06LVITOMDCF	27SBTF10MVN	P2LDX514EENDDN
398030	EL06S71	27SBTF13EVX	P2LDX514EENXB549
398112	EL06SCF	27SBTF13MEN	P2LDX514EENXB549
398112	EL06SMEDCF	27SBTF13MEX	P2LDX514EENXXX
398132	EL06SMEDOMDCF	27SBTF13MPC	P2LDX514EENXXX
398132	EL06SOMD71	27SBTF13MPN	P2LDX514EPADDM57
401333	EL06SOMDCF	27SBTF13MPNS	P2LDX514EPADDM57
405.906	EL06SREDCF	27SBTF13MPX	P2LDX514ESADDM49
423334	EL06SREDOMDCF	27SBTF13MVN	P2LDX514ESADDM49
429301	EL06SVITOMDCF	27SBTF13MVX	P2LDX514ESHDDA72
429783	EL06ZL71	27SBTF13RVX	P2LDX514ESHDDA72
429864	EL06ZLCF	27SBTF16EVX	P2LDX514ESHDDB49
429865	EL06ZLREDCF	27SBTF16MPN	P2LDX514ESHDDB49
430142	EL06ZSCF	27SBTF16MPX	P2LDX514ESHDDN
430142	EL08L71	27SBTF16RVX	P2LDX514ESHDDN
430226	EL08LCF	27SBTF19EVX	P2LDX514ESNDDB49
430226	EL08LMED71	27SBTF19MEN	P2LDX514ESNDDB49
430323	EL08LMEDCF	27SBTF19MPN	P2LDX514ESNDDN
430335	EL08LOMD71	27SBTF19MPNS	P2LDX514ESNDDN
430373	EL08LOMDCF	27SBTF19MPX	P2LDX514ESNXB549
430448	EL08LRED71	27SBTF19MVN	P2LDX514ESNXB549
430661	EL08LREDCF	27SBTF19RVX	P2LDX514ESNXXX
430668	EL08LREDOFFOMD71	27SFAK13MXX	P2LDX514ESNXXX
430670	EL08LREDOMDCF	27SFAK13SXN	P2LDX514PP
430741	EL08LVITCF	27SFAK13SXNS_01	P2LDX514PP
430800	EL08LVITOMDCF	27SFAK17MXX	P2LDX514PS
430822	EL08S71	27SFAK17SXN	P2LDX514PS
430826	EL08SCF	27SFAK17SXNS_01	P2LDX514PS-EX
430836	EL08SMEDCF	27SFAK21MXN	P2LDX514PS-EX

430842	EL08SMEDOMDCF	27SFAK21MXX	P2LDX514VS
430843	EL08SOMD71	27SFAK21SXN	P2LDX514VS
430844	EL08SOMDCF	27SFAK21SXNS_01	P2LDX514VV
431171	EL08SRED71	27SFAK26SXN	P2LDX514VV
431458	EL08SREDCF	27SFAN13MXN	P2LDX61411
431502	EL08SREDOMDCF	27SFAN17MXX	P2LDX61411
431503	EL08SVITOMDCF	27SFAN21SXN	P2LDX61422
431607	EL08ZL71	27SFAW13EXX	P2LDX61422
431708	EL08ZLCF	27SFAW13MXN	P2LDX614EEHDDB49
431713	EL08ZLREDCF	27SFAW13RXX	P2LDX614EEHDDB49
431776	EL08ZLSSACF	27SFAW13SXN	P2LDX614EENDDB49
431778	EL08ZLVITCF	27SFAW17EXX	P2LDX614EENDDB49
432110	EL08ZS71	27SFAW17RXX	P2LDX614EENDDN
432114	EL08ZSCF	27SFAW17SXN	P2LDX614EENDDN
432152	EL08ZSNBR71	27SFAW17SXNS	P2LDX614EENXB549
432155	EL08ZSREDCF	27SFAW21EXX	P2LDX614EENXB549
432163	EL08ZSVITCF	27SFAW21RXX	P2LDX614EENXXX
432165	EL10L71	27SFAW21SXN	P2LDX614EENXXX
432185	EL10LCF	27SFAW21SXNS	P2LDX614PP
432307	EL10LDPR71CF	27SFAW26EXX	P2LDX614PP
432311	EL10LMEDCF	27SFAW26RXX	P2LDX69422
432312	EL10LMEDOMDCF	27SFAW26SXN	P2LDX69422
432313	EL10LMS	27SFAW26SXNS	P2LDX81411
432328	EL10LOMD71	27SFIN21SXN	P2LDX81411
432349	EL10LOMDCF	27SFIW13SXN	P2LDX814EEHDDN
432547	EL10LRED71	27SFIW17EXX	P2LDX814EEHDDN
432575	EL10LREDCF	27SFIW17RXX	P2LDX814EENDDB49
432723	EL10LREDCRCF	27SFIW17SXN	P2LDX814EENDDB49
432779	EL10LREDDPR71MS	27SFIW17SXNS_02	P2LDX814EENDDN
432789	EL10LREDOMDCF	27SFIW21EXX	P2LDX814EENDDN
432886	EL10LVITCF	27SFIW21RXX	P2LDX814PP
436753	EL10LVITOMDCF	27SFIW21SXN	P2LDX814PP
436757	EL10S71	27SFIW21SXNS_02	P2LDX894PP
436818	EL10SCF	27SFIW26EXX	P2LDX894PP
436848	EL10SMEDCF	27SFIW26RXX	P2LDXN14ESNDDN
438520	EL10SOMD71	27SFIW26SXN	P2LDXN14ESNDDN
439458	EL10SOMDCF	27SFTF06RXX	P2LDXN14ESNXB549
439462	EL10SREDCF	27SFTF06SXN	P2LDXN14ESNXB549
439500	EL10SVITCF	27SFTF08EXX	P2LDXR14EENXB549
439500	EL10SVITOMDCF	27SFTF08RXX	P2LDXR14EENXB549
439501	EL10ZL71	27SFTF08SXN	P2LXSK1
439501	EL10ZLCF	27SFTF08SXNS	P2LXSK1
439502	EL10ZLREDCF	27SFTF09EXX	P2M1K0GL
439502	EL10ZLREDVITCF	27SFTF09RXX	P2M1K0GL
439503	EL10ZLSSACF	27SFTF09SXN	P2M1K0GN
439503	EL10ZLVITCF	27SFTF10EXX	P2M1K0GN
439504	EL10ZS71	27SFTF10RXX	P2M1K0TASD
439504	EL10ZSCF	27SFTF10SXN	P2M1K0TASD
439507	EL10ZSREDCF	27SFTF10SXNS_01	P2M1PXCA
439507	EL12L71	27SFTF13EXX	P2M1PXCA
439508	EL12LCF	27SFTF13RXX	P2M1PXCAF4F4
439508	EL12LMED71	27SFTF13SXN	P2M1PXCAF4F4
439514	EL12LMEDCF	27SFTF13SXNS_02	P2M1PXCAF6F6

439514	EL12LMEDOMDCF	27SFTF16EXX	P2M1PXCAF6F6
439814	EL12LMEDVITOMDCF	27SFTF16MXX	P2M1PXCAJJ
439814	EL12LOMD71	27SFTF16RXX	P2M1PXCAJJ
439830	EL12LOMDCF	27SFTF16SXN	P2M1PXCAJJF6
439830	EL12LRED71	27SFTF19EXX	P2M1PXCAJJF6
3107-2-2	EL12LREDCF	27SFTF19RXX	P2M1PXFA
3107-4-4	EL12LREDOMDCF	27SFTF19SXN	P2M1PXFA
440974	EL12LVITCF	27SFTP10MXX	P2M1PXFAJJ
3107-6-6	EL12LVITOMDCF	27SFTP13MXX	P2M1PXFAJJ
3107-8-6	EL12S71	27SRIW17SXN	P2M1PXSG
3107-8-8	EL12SCF	27SRTF09MXX	P2M1PXSG
3107-12-8	EL12SMEDCF	27SRTF13MXN	P2M1PXSGF6F6
3107-12-12	EL12SMEDOMDCF	28 ETX-S	P2M1PXSGF6F6
442308	EL12SNBROMD71	2-8 FBZ-SS	P2M1PXSL
442568	EL12SOMD71	28 JTX-S	P2M1PXSL
443995	EL12SOMDCF	2803FIL	P2M1PXSM
444137	EL12SRED71	2803FIL	P2M1PXSM
444829	EL12SREDCF	2804FIL	P2M1PXSN
444836	EL12SREDOMDCF	2804FIL	P2M1PXSN
3121-1-4	EL12SVITCF	2811FIL	P2M1PXSR
3121-1-6	EL12SVITOMDCF	2811FIL	P2M1PXSR
3121-1-10	EL12ZL71	2812FIL	P2M1PXST
3121-4-6	EL12ZLCF	2812FIL	P2M1PXST
446822	EL12ZLRED71	2813FIL	P2M1PXVA
446823	EL12ZLREDCF	2813FIL	P2M1PXVA
446824	EL12ZLSSACF	2814FIL	P2M1PXVAF6BF6BMA
446825	EL12ZLVITCF	2814FIL	P2M1PXVAF6BF6BMA
446835	EL12ZS71	281584P0001	P2M1S3ES2C
446836	EL12ZSCF	281584P0003	P2M1S3ES2C
447366	EL12ZSRED71	2815FIL	P2M1S3PS
447368	EL12ZSREDCF	2815FIL	P2M1S3PS
447857	EL14SCF	2816FIL	P2M1S4EE2C
448177	EL14SOMD71	2816FIL	P2M1S4EE2C
448178	EL14SOMDCF	2820-25-00330-0000-000000	P2M1S4ES2C
448901	EL14SVITOMDCF	2820-25-00330-0000-000000	P2M1S4ES2C
449877	EL14ZS71	2820-25-00420-0000-000000	P2M1S4PP
449995	EL14ZSCF	2820-25-00420-0000-000000	P2M1S4PP
450812	EL15L71	282087P0001	P2M1S4PS
451161	EL15LCF	282087P0004	P2M1S4PS
451221	EL15LDPR71CF	2821-00500	P2M1SBEE2C
452097	EL15LMEDCF	2821-00500	P2M1SBEE2C
452103	EL15LMEDOMDCF	2821-01200	P2M1SDEE2C
453272	EL15LOMD71	2821-01200	P2M1SDEE2C
453347	EL15LOMDCF	2821-01800	P2M1SDPP
455023	EL15LOMDMS	2821-01800	P2M1SDPP
455069	EL15LRED71	282175R0002	P2M1SEEE2C
455915	EL15LREDCF	282175R0004	P2M1SEEE2C
460880	EL15LREDOMDCF	282175R0009	P2M1T3ES2C
461723	EL15LVITCF	282175R0010	P2M1T3ES2C
461809	EL15LVITOMDCF	282182P0001	P2M1T4EE2C
463648	EL15LVITOMDVOLCF	2822-00150	P2M1T4EE2C
463649	EL15ZL71	2822-00150	P2M1T4EE2CV20C6
463650	EL15ZLCF	2822-00200	P2M1T4EE2CV20C6

463651	EL15ZLRED71	2822-00200	P2M1T4EE2CV20F6
463652	EL15ZLREDCF	2822-00290	P2M1T4EE2CV20F6
463919	EL15ZLVITCF	2822-00290	P2M1T4ES2C
464077	EL15ZLVITSSACF	2822-00400	P2M1T4ES2C
464785	EL16S71	2822-00400	P2M1T4ES2CV20F6
465198	EL16SCF	2822-00500	P2M1T4ES2CV20F6
465199	EL16SMEDCF	2822-00500	P2M1T4PP
465200	EL16SOMD71	2822-00550	P2M1T4PP
465201	EL16SOMDCF	2822-00550	P2M1T4PS
465202	EL16SRED71	2822-00576	P2M1T4PS
465458	EL16SREDCF	2822-00576	P2M1TCEE2C
465459	EL16SREDOMDCF	2822-00750	P2M1TCEE2C
472323	EL16SVITCF	2822-00750	P2M1TDEE2C
472332	EL16SVITOMDCF	2822-00950	P2M1TDEE2C
473112	EL16ZS71	2822-00950	P2M1TEEE2C
474413	EL16ZSCF	2822-01000	P2M1TEEE2C
477342	EL16ZSRED71	2822-01000	P2M1TGEE2C
478035	EL16ZSREDCF	2822-01150	P2M1TGEE2C
478036	EL18L71	2822-01150	P2M1TJEE2C
481066	EL18LCF	2822-01195	P2M1TJEE2C
481066	EL18LCRCF	2822-01195	P2M1TJPP
481121	EL18LDPR71CF	2822-01200	P2M1TJPP
481121	EL18LMEDCF	2822-01200	P2M1V3/3002382
481280	EL18LMEDOMDCF	2822-01220	P2M1V3/3002382
481280	EL18LOMD71	2822-01220	P2M1V3ES2CV
481294	EL18LOMDCF	2822-01450	P2M1V3ES2CV
481294	EL18LRED71	2822-01450	P2M1V3ES2CV00F6
481296	EL18LREDCF	2822-01460	P2M1V3ES2CV00F6
481296	EL18LREDOMDCF	2822-01460	P2M1V4EE2CV
481722	EL18LREDVITCF	2822-01700	P2M1V4EE2CV
481722	EL18LVITCF	2822-01700	P2M1V4EE2CV00F4
481727	EL18LVITOMDCF	2822-01800	P2M1V4EE2CV00F4
481727	EL18ZL71	2822-01800	P2M1V4EE2CV00F6
481737	EL18ZLCF	2822-01820	P2M1V4EE2CV00F6
481737	EL18ZLRED71	2822-01820	P2M1V4ES2CV
481965	EL18ZLREDCF	2822-01890	P2M1V4ES2CV
481965	EL18ZLREDVITCF	2822-01890	P2M1V4ES2CV00F4
481966	EL18ZLSSACF	2822-01910	P2M1V4ES2CV00F4
481966	EL18ZLVITCF	2822-01910	P2M1V4ES2CV00F6
481969	EL20S71	2822-02050	P2M1V4ES2CV00F6
481969	EL20SCF	2822-02050	P2M1VBEE2CV
482010	EL20SMEDCF	2822-02250	P2M1VBEE2CV
482010	EL20SOMD71	2822-02250	P2M1VCEE2CV
483328	EL20SOMDCF	282221P0001	P2M1VCEE2CV
483328	EL20SREDCF	282221P0003	P2M1VDEE2CV
483329	EL20SREDOMDCF	282225P0001	P2M1VDEE2CV
483329	EL20SVITCF	282226P0003	P2M1VDEE2CV00F4
483838	EL20SVITOMDCF	282236P0106	P2M1VDEE2CV00F4
483838	EL20ZS71	2823-00150	P2M1VDEE2CV00F6
484047	EL20ZSCF	2823-00150	P2M1VDEE2CV00F6
484047	EL20ZSRED71	2823-00175	P2M1VEEE2CV
484066	EL20ZSREDCF	2823-00175	P2M1VEEE2CV
484066	EL22L71	2823-00200	P2M1VGEE2CV

484171	EL22LCF	2823-00200	P2M1VGEE2CV
484171	EL22LDPR71CF	2823-00205	P2M1VJEE2CV
484379	EL22LMEDCF	2823-00205	P2M1VJEE2CV
484379	EL22LOMD71	2823-00250	P2M1X3ES
484519	EL22LOMDCF	2823-00250	P2M1X3ES
484519	EL22LRED71	2823-00300	P2M1X4EE
484775	EL22LREDCF	2823-00300	P2M1X4EE
484775	EL22LREDOMD71	2823-00360	P2M1X4ES
484886	EL22LREDOMDCF	2823-00360	P2M1X4ES
484886	EL22LVITCF	2823-00390	P2M1XDEE
484916	EL22LVITOMDCF	2823-00390	P2M1XDEE
484916	EL22ZL71	2823-00400	P2M2BXT0A
484920	EL22ZLCF	2823-00400	P2M2BXT0A
484920	EL22ZLRED71	2823-00500	P2M2BXV0A
484944	EL22ZLREDCF	2823-00500	P2M2BXV0A
484944	EL22ZLVITCF	2823-00550	P2M2HBVA10400
485290	EL25S71	2823-00550	P2M2HBVA10400
485290	EL25SCF	2823-00576	P2M2HBVA10404B
485291	EL25SOMD71	2823-00576	P2M2HBVA10404B
485291	EL25SOMDCF	2823-00600	P2M2HBVA10800
485635	EL25SREDCF	2823-00600	P2M2HBVA10800
485635	EL25SREDOMDCF	2823-00650	P2M2HBVA10808A
486162	EL25SVITCF	2823-00650	P2M2HBVA10808A
486162	EL25SVITOMDCF	2823-00750	P2M2HBVA10808B
486163	EL25ZS71	2823-00750	P2M2HBVA10808B
486163	EL25ZSCF	2823-00950	P2M2HBVA20600
486164	EL25ZSREDCF	2823-00950	P2M2HBVA20600
486164	EL25ZSVITCF	2823-01000	P2M2HBVA20608A
486675	EL28L71	2823-01000	P2M2HBVA20608A
486675	EL28LCF	2823-01100	P2M2HBVA20608B
486866	EL28LDPR71CF	2823-01100	P2M2HBVA20608B
486866	EL28LMEDCF	2823-01150	P2M2HBVC11600
487085	EL28LOMD71	2823-01150	P2M2HBVC11600
487085	EL28LOMDCF	2823-01195	P2M2HBVD11600
487304	EL28LRED71	2823-01195	P2M2HBVD11600
487304	EL28LREDCF	2823-01200	P2M2HBVP11600
487364	EL28LREDOMDCF	2823-01200	P2M2HBVP11600
487364	EL28LREDVITCF	2823-01400	P2M2HBVP21600
488647	EL28LVITCF	2823-01400	P2M2HBVP21600
488647	EL28LVITOMDCF	2823-01450	P2M2HBVS11600
488867	EL28ZL71	2823-01450	P2M2HBVS11600
488867	EL28ZLCF	2823-01460	P2M2HEV0A
488877	EL28ZLREDCF	2823-01460	P2M2HEV0A
488877	EL28ZLREDVITCF	2823-01600	P2M2HEV0D
488888	EL28ZLVITCF	2823-01600	P2M2HEV0D
488888	EL30S71	2823-01700	P2M2HEV2A
490071	EL30SCF	2823-01700	P2M2HEV2A
490107	EL30SMEDCF	2823-01800	P2M2HEV5A
490111	EL30SOMD71	2823-01800	P2M2HEV5A
490113	EL30SOMDCF	2823-01820	P2M2HEV9A
490114	EL30SREDCF	2823-01820	P2M2HEV9A
490116	EL30SREDOMDCF	2823-01910	P2M2HXT01
490118	EL30SVITCF	2823-01910	P2M2HXT01

490141	EL30SVITOMDCF	2823-02050	P2M2HXT01C8MM
490159	EL30ZS71	2823-02050	P2M2HXT01C8MM
490749	EL30ZSCF	2823-02110	P2M2HXT01F0F0
490749	EL30ZSREDCF	2823-02110	P2M2HXT01F0F0
491092	EL35L71	2823-02900	P2M2HXT01F0F8
491092	EL35LCF	2823-02900	P2M2HXT01F0F8
491366	EL35LDPR71CF	282318P0001	P2M2HXT01F0MM
491366	EL35LOMD71	282318P0003	P2M2HXT01F0MM
491367	EL35LOMDCF	282395P0008	P2M2HXT01F2F2
491367	EL35LRED71	282395P0014	P2M2HXT01F2F2
491749	EL35LREDCF	282456R0002	P2M2HXT01F2MM
491749	EL35LREDOMDCF	282456R0005	P2M2HXT01F2MM
492028	EL35LVITCF	282456R0009	P2M2HXT01F8F8
492028	EL35LVITOMDCF	28-24F42EDMXS	P2M2HXT01F8F8
492506	EL35ZL71	28-24F4OMXS	P2M2HXT01F8MM
492506	EL35ZLCF	28-24TRTXS	P2M2HXT01F8MM
492959	EL35ZLRED71	282526R0001	P2M2K0CA
492959	EL35ZLVITCF	282526R0002	P2M2K0CA
493090	EL38S71	282779P0001	P2M2K0FA
493090	EL38SCF	282781R0001	P2M2K0FA
493091	EL38SOMD71	282781R0003	P2M2K0JA
493091	EL38SOMDCF	282782R0011	P2M2K0JA
493841	EL38SREDCF	282782R0012	P2M2PXCA
493841	EL38SREDOMDCF	282782R0013	P2M2PXCA
493937	EL38SVITCF	282782R0014	P2M2PXCAF0F0
493937	EL38SVITOMDCF	282782R0015	P2M2PXCAF0F0
494834	EL38ZS71	282782R0016	P2M2PXCAF8F8
494834	EL38ZSCF	282782R1012	P2M2PXCAF8F8
495005	EL38ZSREDCF	282782R1013	P2M2PXFA
495005	EL42L71	282782R1016	P2M2PXFA
495120	EL42LCF	282783P0001	P2M2PXSG
495120	EL42LOMD71	282784P0001	P2M2PXSG
495376	EL42LOMDCF	282784P0002	P2M2PXSL
495376	EL42LRED71	2829-10MM	P2M2PXSL
495404	EL42LREDCF	2829-12MM	P2M2PXSM
495404	EL42LREDOMDCF	2829-14MM	P2M2PXSM
495740	EL42LVITCF	2829-5MM	P2M2PXSN
495740	EL42LVITOMDCF	2829-6MM	P2M2PXSN
495741	EL42ZL71	2829-8MM	P2M2PXSR
495741	EL42ZLCF	283154P0005	P2M2PXSR
496449	EL42ZLRED71	283154P0008	P2M2S3ES2C
496449	EL42ZLREDCF	283154P0009	P2M2S3ES2C
496484	EL42ZLVITCF	283154P0011	P2M2S3PS
496484	ELA1/4EDCF	283154P0023	P2M2S3PS
496490	ELAE10LCF	283154P0028	P2M2S4EE2C
496490	ELZ 10-3/8-SS	283154P0037	P2M2S4EE2C
496551	EM000026	283154P0038	P2M2S4ES2C
496551	EM000026	283154P0039	P2M2S4ES2C
496552	EM000028	283260P0001	P2M2S4PP
496552	EM000028	283263R0001	P2M2S4PP
496569	EM000029	283263R0002	P2M2S4PS
496569	EM000029	283263R0003	P2M2S4PS
496570	EM000051	283263R0008	P2M2SBEE2C

496570	EM000051	283263R0010	P2M2SBEE2C
496601	EM000058	283263R0011	P2M2SDEE2C
496601	EM000058	283263R0012	P2M2SDEE2C
496796	EM000059	283467P0001	P2M2SDPP
496796	EM000059	283569P0001	P2M2SDPP
505242	EM000060	283672R0001	P2M2SEEE2C
505959	EM000060	2837-01200	P2M2SEEE2C
520117	EM000062	2837-01200	P2M2SGEE2C
520516	EM000062	2838-00600	P2M2SGEE2C
520517	EM000064	2838-00600	P2M2T3ES2C
522516	EM000064	2838-00850	P2M2T3ES2C
523474	EM000069	2838-00850	P2M2T4EE2C
523484	EM000069	2838-01125	P2M2T4EE2C
528334	EM000070	2838-01125	P2M2T4ES2C
528347	EM000070	2838-01150	P2M2T4ES2C
528403	EM000076	2838-01150	P2M2T4PP
528441	EM000076	2838-01300	P2M2T4PP
528442	EM000090	2838-01300	P2M2T4PS
529252	EM000090	2838-01515	P2M2T4PS
529580	EM000091	2838-01515	P2M2TCEE2C
529581	EM000091	2838-01730	P2M2TCEE2C
529582	EM000109	2838-01730	P2M2TDEE2C
529584	EM000109	2839-00600	P2M2TDEE2C
529913	EM000110	2839-00600	P2M2TDPP
529996	EM000110	2839-00850	P2M2TDPP
530634	EM000142	2839-00850	P2M2TEEE2C
530884	EM000142	2839-01125	P2M2TEEE2C
531504	EM10.P	2839-01125	P2M2TGEE2C
532103	EM12	2839-01150	P2M2TGEE2C
532104	EM12	2839-01150	P2M2V3ES2CV
539007	EM209000	2839-01300	P2M2V3ES2CV
544811	EMA1/1/2CF	2839-01300	P2M2V4EE2CV
544812	EMA1/1/4CF	2839-01515	P2M2V4EE2CV
544814	EMA1/1/8CF	2839-01515	P2M2V4EE2CV00C8
544815	EMA1/10X1CF	2839-01730	P2M2V4EE2CV00C8
544816	EMA1/10X1ORCF	2839-01730	P2M2V4EE2CV00F0
544882	EMA1/12X1.5CF	2839-04253	P2M2V4EE2CV00F0
547536	EMA1/14X1.5CF	2839-04253	P2M2V4EE2CV00F8
547968	EMA1/16X1.5CF	2840D-03V34	P2M2V4EE2CV00F8
548150	EMA1/3/8CF	2840D-05V32	P2M2V4ES2CV
548549	EMA1/8X1OREPDMCF	2840D-05V34	P2M2V4ES2CV
549273	EMA1/8X1ORNBRCF	2840D-05V36	P2M2V4ES2CV00F0
550004	EMA1/8X1ORVITCF	2840D-08V30	P2M2V4ES2CV00F0
550010	EMA3/06SRCF	2847FIL	P2M2V4ES2CV00F8
550038	EMA3/08SRCF	2847FIL	P2M2V4ES2CV00F8
550055	EMA3/1/271	2848D-05V34	P2M2VBEE2CV
550221	EMA3/1/2CF	2849D-05V34	P2M2VBEE2CV
550257	EMA3/1/2ED71	2850-25-00520-0000-000000	P2M2VCEE2CV
550258	EMA3/1/2EDCF	2850-25-00520-0000-000000	P2M2VCEE2CV
550261	EMA3/1/2EDVITCF	285-10-RL	P2M2VDEE2CV
550262	EMA3/1/4CF	285-12-RL	P2M2VDEE2CV
550263	EMA3/1/4ED71	285-4-RL	P2M2VDEE2CV00C8
550264	EMA3/1/4EDBPCF	285-6-RL	P2M2VDEE2CV00C8

550268	EMA3/1/4EDCF	285-8-RL	P2M2VDEE2CV00F8
550397	EMA3/1/4EDEPDMCF	2861FIL	P2M2VDEE2CV00F8
550437	EMA3/1/4EDEPDMKKCF	2861FIL	P2M2VEEE2CV
550438	EMA3/1/4EDOKCF	2862FIL	P2M2VEEE2CV
550439	EMA3/1/4EDVITCF	2862FIL	P2M2VGEE2CV
550440	EMA3/1/4NPT71	2876FIL	P2M2VGEE2CV
550441	EMA3/1/4NPTCF	2876FIL	P2M2X3ES
550442	EMA3/1/4VITCF	2887FIL	P2M2X3ES
550443	EMA3/1/8CF	2887FIL	P2M2X4EE
550444	EMA3/1/8ED71	2889FIL	P2M2X4EE
550445	EMA3/1/8EDCF	2889FIL	P2M2X4ES
550504	EMA3/1/8EDVITCF	2897FIL	P2M2X4ES
550505	EMA3/1/8NPTCF	2897FIL	P2M2XCEE
550508	EMA3/10X1CF	28BMTXS	P2M2XCEE
550515	EMA3/10X1ED71	28BMTXSS	P2M2XDEE
550524	EMA3/10X1EDCF	28HMTXS	P2M2XDEE
550530	EMA3/10X1EDEPDMKKCF	28KSAK17SPN	P2M2XEEE
550532	EMA3/10X1EDVITCF	28KSAK21SPN	P2M2XEEE
550540	EMA3/10X1EPDMCF	28KSAK26SPN	P2N-AA5B
550570	EMA3/10X1OR71	28KSAN21SPN	P2N-AA5B
550571	EMA3/10X1ORCF	28KSIN21SPN	P2N-AK0P
550572	EMA3/10X1ORVITCF	28KSIW17SPN	P2N-AK0P
550573	EMA3/12X1.5CF	28KSIW21SPN	P2N-AM500J
550574	EMA3/12X1.5ED71	28KSIW26SPN	P2N-AM500J
550575	EMA3/12X1.5EDCF	28KSTF13SPN	P2N-AM512MB
550576	EMA3/12X1.5EDVITCF	28KSTF16SPN	P2N-AM512MB
550577	EMA3/14X1.5CF	28KSTF19SPN	P2N-AM513BT
550578	EMA3/14X1.5ED71	28P102QBM3MG161	P2N-AM513BT
550579	EMA3/14X1.5EDCF	28P102QBT1MG161	P2N-AM513GS
550580	EMA3/14X1.5EDVITCF	28P102QHBNXG162	P2N-AM513GS
550581	EMA3/14X1.5ISOCF	28P105QBF1MG161	P2N-AM513GT
550582	EMA3/14X1.5ISOVITCF	28P105QBM3MG161	P2N-AM513GT
550583	EMA3/16X1.5CF	28P105QBT1MG161	P2N-AS512SD
550584	EMA3/16X1.5ED71	28P110QBF1MG161	P2N-AS512SD
550585	EMA3/16X1.5EDCF	28P110QBF3MG161	P2N-BA5B
550702	EMA3/18X1.5CF	28P110QBM3KG161	P2N-BA5B
550707	EMA3/18X1.5EDCF	28P110QBM3MG161	P2N-CA5B
550709	EMA3/20X1.5EDCF	28P110QBM3MS161	P2N-CA5B
550716	EMA3/22X1.5CF	28P110QBNMG161	P2N-DS514SB
550736	EMA3/22X1.5EDCF	28P110QBPKG161	P2N-DS514SB
550749	EMA3/3/4CF	28P110QBPMG161	P2N-DS514SD
550755	EMA3/3/4EDCF	28P110QBT1KG161	P2N-DS514SD
550884	EMA3/3/8CF	28P110QBT1MG161	P2N-EM512MD
550886	EMA3/3/8ED71	28P110QHBM3MG162	P2N-EM512MD
551057	EMA3/3/8EDCF	28P110QHBNXG162	P2N-EM513ES
551061	EMA3/3/8EDVITCF	28P110QHBT1MG162	P2N-EM513ES
551111	EMA3/7/16UNF-BULKCF	28P110QVT1MG161	P2N-FM513MD
551269	EMA3/7/16UNFCF	28-P-119	P2N-FM513MD
551301	EMA3/7/16UNFVITCF	28P120QBM3KG161	P2N-FM514ES
551322	EMA3/8X1OR71	28P120QBM3MG161	P2N-FM514ES
551332	EMA3/8X1ORCF	28P120QBNMG161	P2N-GS511SD
551339	EMA3/9/16UNFCF	28P120QBT1MG161	P2N-GS511SD
551346	EMA3/9/16UNFVITCF	28P120QHBM3MG162	P2N-GS512SB

551352	EMA3/SCHR-KAPPECF	28P120QHBNXG162	P2N-GS512SB
551362	EMA3/SHCF	28P120QHBT1MG162	P2N-GS512SD
551372	EMA3VSCF	28-P-121	P2N-GS512SD
551391	EMA4/1/2	28-P-171	P2N-HS512SS
551407	EMA4/1/4	28-P-178	P2N-HS512SS
551410	EMA4/1/471	28-P-179	P2N-HS513SB
551418	EMA4/1/4ED	28-P-190	P2N-HS513SB
551420	EMA4/1/4VIT	28-P-191	P2N-HS514SS
551498	EMA4/12X1.5	28-P-193	P2N-HS514SS
551499	EMA4/12X1.571	28-P-194	P2N-JS516SD
551906	EMA4/12X1.5ED71/31B	28-P-195	P2N-JS516SD
551990	EMA4/14X1.5	28-P-196	P2N-VK0P
551993	EMA4/16X1.5	28-P-198	P2N-VK0P
552047	EMA4/18X1.5	28P202QBT1MG161	P2N-VM500AK
552428	EMA4/3/8	28P202QHBM3MG162	P2N-VM500AK
553006	EMDV10NC20024DG	28P202QHBT1MG162	P2N-VM512MB
553547	EMPBFIL	28P205QBF1MG161	P2N-VM512MB
553667	EMPBFIL	28P205QBM3MG161	P2N-VM513ES
553681	EMVBUE-D6K08V1	28P205QBPMG161	P2N-VM513ES
555024	EMVBUE-D6K16V1	28P205QBT1MG161	P2N-VS512SD
557512	EMVBUE-DEK15V1	28P205QHBM3MG162	P2N-VS512SD
560569	EN10204-2.1/2.2-FHC	28P205QHBT1MG162	P2N-WK0P
560578	EN10204-2.1/2.2-FHD	28-P-207	P2N-WK0P
560580	EN10204-2.1/2.2-FHE	28P210QBF1MG161	P2N-WM513MB
560581	EN10204-2.1/2.2-FHM	28P210QBF2MG161	P2N-WM513MB
560582	EN10204-3.1B-FGB	28P210QBM3KG161	P2N-WM514ES
560583	EN10204-3.1B-FGJ	28P210QBM3MG161	P2N-WM514ES
560585	EN10204-3.1B-FGL	28P210QBNMG161	P2N-WS513SD
560586	EN10204-3.1B-FGN	28P210QBPMG161	P2N-WS513SD
560587	EN10204-3.1B-FGP	28P210QBPMH161	P2N-YM514MB
560918	EN10204-3.1B-FGR	28P210QBT1MG161	P2N-YM514MB
560920	EN10204-3.1B-FHC	28P210QBT1MH161	P2N-YM518ES
560929	EN10204-3.1B-FHD	28P210QBT1MR161	P2N-YM518ES
560944	EN10204-3.1B-FHE	28P210QHBM3MG162	P2N-YS514SD
560945	EN10204-3.1B-FHM	28P210QHBT1MG161	P2N-YS514SD
560946	ENCODERA7	28P210QHBT1MG162	P2S-EW344ES5
560972	EO2FORM400VPRO	28P210QHVM3MH162	P2S-EW344ES5
560975	EO2FORMF3 40097/3	28-P-211	P2V-AK0M
560976	EO2FORMF3 40110/10	28-P-212	P2V-AK0M
560977	EO2FORMF3 40110/159	28-P-214	P2V-AK0P
560978	EO2FORMF3 40110/168	28-P-216	P2V-AK0P
560982	EO2FORMF3 40110/30	28-P-218	P2V-AM500BE
560984	EO2FORMF3 40110/36	28-P-219	P2V-AM500BE
560985	EO2FORMF3 40110/4	28P220QBM3MG161	P2V-AM500G0
560986	EO2FORMF3 40110/58	28P220QBM3MH161	P2V-AM500G0
560987	EO2FORMF3 40110/82	28P220QBNMG161	P2V-AM500H0
561018	EO2FORMF3/INSPECTION	28P220QBPKG161	P2V-AM500H0
561831	EO2FORMF3230V	28P220QBT1MG161	P2V-AM511NB
561850	EO2FORMF3400V	28P220QBT1MS161	P2V-AM511NB
562063	EO2FORMF3400VLEASE	28-P-225	P2V-AM511PB
562296	EO2FORMF3400VSPONSOR	28-P-228	P2V-AM511PB
562752	EO2FORMF3DEM40110/11	28-P-237	P2V-AM512GB
563240	EO2FORMF3DEM40110/21	28-P-239	P2V-AM512GB

563241	EO2FORMF3LEASEFEE	28-P-240	P2V-AM512GS
563242	EO2FORMF3RENTFEE	28-P-244	P2V-AM512GS
563360	EO2FORMPRO22 40450	28-P-246	P2V-AM512HB
563361	EOKARRYMAT	28P-25-02H-10	P2V-AM512HB
564693	EOKARRYMAT 0627	28-P-260	P2V-AM512HS
564694	EOKARRYMAT/BLOCK	28-P-261	P2V-AM512HS
565224	EOKARRYMAT/CHART	28-P-267	P2V-AM512HT
565259	EOKARRYMAT/HINGE	28-P-268	P2V-AM512HT
565262	EOKARRYMAT/MANO	28-P-275	P2V-AS511SS
565795	EOKARRYMATDEMO	28-P-278	P2V-AS511SS
575064	EOKARRYMATG	28-P-41	P2V-AV500EE
575878	EOMAT/0212500	28-P-42	P2V-AV500EE
582007	EOMAT/0212800	28P-50-02H-20	P2V-AV500ES
3507-4-4	EOMAT/0213500	28-P-63	P2V-AV500ES
3507-6-6	EOMAT/0213800	28-P-64	P2V-AV500ES6CS
3507-10-8	EOMAT/0213900	28SSAK17SXN	P2V-AV500ES6CS
3507-12-12	EOMAT/21130010	28SSAK21SXN	P2V-AV500PP
589847	EOMAT/21160095	28SSAK26SXN	P2V-AV500PP
590533	EOMAT/CLIP	28SSAN21SXN	P2V-AV500PS
590535	EOMAT/FLAREPIN	28SSIW17SXN	P2V-AV500PS
590537	EOMAT/TOOLSETG	28SSIW21SXN	P2V-AV500QS
591171	EOMATBOERDELBX	28SSIW26SXN	P2V-AV500QS
594615	EOMATECO/CHART	28SSTF10SXN	P2V-AV600EE
600040	EOMATECO/INSPECTION	28SSTF13SXN	P2V-AV600EE
600040	EOMATECO/MANUAL	28SSTF16SXN	P2V-AV600PP
621044	EOMATECO230V	28SSTF19SXN	P2V-AV600PP
621044	EOMATECODEMO102	290-006061-001	P2V-AV700EE
621045	EOMATECODEMO103	290-006062-003	P2V-AV700EE
621045	EOMATECODEMO104	290-006064-002	P2V-AV700PP
621046	EOMATECODEMO105	2901FIL	P2V-AV700PP
621047	EOMATECORENTFEE	2901FIL	P2V-AV800EE
621048	EOMATII 01652	2904FIL	P2V-AV800EE
621049	EOMATII 03602	2904FIL	P2V-AV800PP
631092	EOMATII 03603	2911FIL	P2V-AV800PP
631154	EOMATII 04730	2911FIL	P2V-AVN00ES
631156	EOMATII 05678	2912FIL	P2V-AVN00ES
642281	EOMATII 05794	2912FIL	P2V-BA5B
642282	EOMATII 06136	29134J-103	P2V-BA5B
642283	EOMATII 06137	29134J-103	P2V-BK0P
642781	EOMATII 06772	292EJ-12-12	P2V-BK0P
642782	EOMATII 07538	292EJ-16-16	P2V-BM500G0
642783	EOMATII 07689	292EJ-20-20	P2V-BM500G0
678884	EOMATII 07869	292EJ-8-08	P2V-BM500H0
697549	EOMATII 08799	292NC-16-16	P2V-BM500H0
697647	EOMATII 09144	292NC-20-20	P2V-BM512NB
697981	EOMATII 09746	293-10-RL	P2V-BM512NB
700005	EOMATII 11300	293-12-RL	P2V-BM512PB
700499	EOMATII 3461	293-16-RL	P2V-BM512PB
700738	EOMATII CO4585145	2931FIL	P2V-BM513GB
700865	EOMATII/0210700	2931FIL	P2V-BM513GB
700943	EOMATII/0410400	2932FIL	P2V-BM513GS
701013	EOMATII/2301906500	2932FIL	P2V-BM513GS
701306	EOMATII/2302600100	293-4-RL	P2V-BM513GT

701307	EOMATII/2302604600	293-6-RL	P2V-BM513GT
701334	EOMATII/2302608000	2937FIL	P2V-BM513HB
701770	EOMATII/2302609100	2937FIL	P2V-BM513HB
701842	EOMATII/2303805000	293-8-RL	P2V-BM513HS
702743	EOMATII/2303805300	2941FIL	P2V-BM513HS
703501	EOMATII/2304800900	2941FIL	P2V-BS511SB
703502	EOMATII/240504203	2942FIL	P2V-BS511SB
703504	EOMATII/240504205	2942FIL	P2V-BS512SS
703506	EOMATII220VGX	2943FIL	P2V-BS512SS
703518	EOMATII380VGX	2943FIL	P2V-BV500EE
703519	EOMATIII 01465	2944FIL	P2V-BV500EE
703520	EOMATIII 01466	2944FIL	P2V-BV500EE6CS
703524	EOMATIII 04323	2999FIL	P2V-BV500EE6CS
703525	EOMATIII 05162	2999FIL	P2V-BV500ES
703526	EOMATIII 05163	299FIL	P2V-BV500ES
703539	EOMATIII 07255	299FIL	P2V-BV500ES6CS
703540	EOMATIII 09268	29KAIW21SPZ	P2V-BV500ES6CS
703541	EOMATIII 09356	29KAIW26SPZ	P2V-BV500PP
703542	EOMATIII 11297	29KFIW26SPZ	P2V-BV500PP
703543	EOMATIII/0241105703	29SFAW21SPZ	P2V-BV500PS
703546	EOMATIII/2302604700	29SFAW26SPZ	P2V-BV500PS
703547	EOMATIII/2304800200	29SFIW21SPZ	P2V-BV600EE
703548	EOMATIII/2304800300	29SFIW26SPZ	P2V-BV600EE
703549	EOMATIII/240101200	29SFTF13SPZ	P2V-BV600PP
703550	EOMATIII/A380VGX	29SFTF16SPZ	P2V-BV600PP
703573	EOMATIII/INSPECTION	29SFTF19SPZ	P2V-BV700EE
703575	EOMATIIIA/0241100422	29SRKO16SPZ	P2V-BV700EE
703581	EOMATIIIA/0241100431	29SRTF13SPZ	P2V-BV800EE
703583	EOMATIIIA/0241100432	29SRTF19SPZ	P2V-BV800EE
704680	EOMATIIIA/2302504600	2A7-MB6X5PFA-SSP	P2V-BVN00EE
704681	EOMATIIIFUSSX	2A-B2LJ2-BN-BP	P2V-BVN00EE
710419	EOMATIIINOTAUSX	2A-B2LJ2-BN-SSP	P2V-BVN00ES
710439	EOMATIIIRENTFEE	2A-B2LJ2-BP	P2V-BVN00ES
718121	EOMATIIRENTFEE	2A-B2LJ2-SSP	P2V-BVN00JS
775480	EOMATPRO/BASE	2A-B2LJ2-V-SSP	P2V-BVN00JS
775481	EOMATPRO/CLIP	2A-B2LJ-BP	P-3000
775499	EOMATPRO/INSPECTION	2A-B2LJ-SSP	P-3003
775500	EOMATPRO/MANUAL	2A-B2LJ-V-SSP	P301PN0030M060/075/11/40
775501	EOMATPRO22400V	2A-B2XJ2-BP	P301PN0030M080/100/19/40
775502	EOMATPRO42400V	2A-B2XJ2-SSP	P301PN0040M060/075/11/40
775613	EOMATSCHNEIDRGX	2A-B2XJ2-SSP-C3	P301PN0050M060/075/11/40
775614	EOMATSCHNEIDRX	2A-B2XJ2-V-SSP	P301PN0070M060/075/11/40
775615	EOMATUNI 0107112	2A-B2XJ-BP	P301PN0070M080/100/14/40
775616	EOMATUNI 0412	2A-B2XJ-SSP	P301PN0080M060/075/11/40
775617	EOMATUNI/CHART	2A-B2XJ-V-SSP	P301PN0100M060/075/11/40
775618	EOMATUNI/MANUAL	2A-B6LJ2-BP	P301PV0030M080/100/14/40
775619	EOMATUNI230V	2A-B6LJ2-SSP	P301PV0050M080/100/14/40
775620	EOMATUNI230V60HZ	2A-B6LJ-BP	P301PV0070M080/100/14/40
775622	EOMATUNI230VG	2A-B6LJ-SSP	P301PV0100M080/100/19/40
775623	EOMATUNI230VSPONSOR	2A-B6XJ2-SSP	P3105L00C1C28LA35V00S1B1D
775624	EOMATUNIRENTFEE	2A-B6XJ-SSP	P312PN0150M060/075/11/40
775626	EOMATWERKZGAUFN.X	2A-C2L-1/3-B	P312PN0150M080/100/19/40
775627	EONIROMONTFLUESSX	2A-C2L-1/3-BN-B	P312PN0250M060/075/11/40

775638	EONIROMONTPASTX	2A-C2L-1/3-EPR-B	P312PN1000M060/075/11/40
775649	EPB10	2A-C2L-1/3-EPR-SS	P3145C000009
775670	EPB12	2A-C2L-1/3-SS	P3145C000010
775738	EPB14	2A-C2L-100-SS	P3145L00D1D30TA20N46S1B1E
775739	EPB4	2A-C2L-10-EPR-SS	P3145R00C1C25LA25N00S1A1U
780181	EPB6	2A-C2L-10-SS	P3145R00C1C25LA30N00S1A1D
780193	EPB8	2A-C2L-1-B	P3145R00D1D30LA25N00S1A1D
780196	EPF1105QIBPKG081	2A-C2L-1-EPR-SS	P3145R00D1D32TC20N80S1B1D
800966	EPF1105QIBPMG081	2A-C2L-1-SS	P3145R90D1D28LA23N00B1B1E
820091	EPF1105QIBT1MG081	2A-C2L-1-SS-C3	P31CA12GEBNTLNW
820092	EPF1105QIVF3LG081	2A-C2L-25-B	P31CA12GEBNTLNW
820093	EPF1110QIBM3MG081	2A-C2L-25-BN-B	P31CA12GEMNTLNW
870035	EPF1110QIBPKG081	2A-C2L-25-EPR-SS	P31CA12GEMNTLNW
870149	EPF1110QIBPMG081	2A-C2L-25-SS	P31CA12MEBNTLNW
870150	EPF1120QIBPMG081	2A-C2L-50-SS	P31CA12MEBNTLNW
890127	EPF2102QIHBM3MG122	2A-C2L-5-B	P31CA12MEMNTLNW
901723	EPF2105QIBT1MG121	2A-C2L-5-EPR-SS	P31CA12MEMNTLNW
906634	EPF2105QIHBT1MG122	2A-C2L-5-SS	P31CB12GEBNTLNW
906636	EPF2110QIBM3KG121	2A-C2L-75-EPR-SS	P31CB12GEBNTLNW
906641	EPF2110QIBM3MG121	2A-F2L-100-B	P31CB12GEMNTLNW
906644	EPF2110QIBM3MX121	2A-F2L-100-SS	P31CB12GEMNTLNW
906707	EPF2110QIBPLG121	2A-F2L-10-B	P31DA12PPN
907023	EPF2110QIBPMG081	2A-F2L-10-BN-B	P31DA12PPN
907024	EPF2110QIBPMG121	2A-F2L-10-SS	P31DA12SGN0000
907026	EPF2110QIBT1MG121	2A-F2L-1-B	P31DA12SGN0000
907034	EPF2110QIHBT1MG122	2A-F2L-1-BN-SS	P31DA12SGNC2CN
908642	EPF2120QIBM3LG121	2A-F2L-1-EPR-SS	P31DA12SGNC2CN
909305	EPF2120QIBPMG121	2A-F2L-1-SS	P31EA12EGBBNLP
909306	EPF2120QIBT1MG081	2A-F2L-450-SS	P31EA12EGBBNLP
909307	EPF2120QIBT1MG121	2A-F2L-50-B	P31EA12EGBBNNP
909308	EPF2205QIBPMG121	2A-F2L-50-SS	P31EA12EGBBNNP
909323	EPF2210QIBF1MG121	2A-F2L-5-B	P31EA12EGBBNSP
909358	EPF2210QIBM3MG121	2A-F2L-5-BN-B	P31EA12EGBBNSP
909867	EPF2210QIBPMG121	2A-F2L-5-BN-SS	P31EA12EGBBNTP
914454	EPF2210QIBT1KG121	2A-F2L-5-SS	P31EA12EGBBNTP
914465	EPF2210QIHBT1MX122	2A-FT4-5-SS	P31EA12EGBBNVP
914470	EPF2210QIVPMG121	2A-H0A-BN-SS-TC	P31EA12EGBBNVP
914472	EPF2220QIBM3KX121	2A-H0A-EPR-SS-K	P31EA12EGBBNYP
914474	EPF2220QIBPMG121	2A-H0A-KZ-SS-K	P31EA12EGBBNYP
914476	EPF3102QIBM3MG161	2A-H0A-KZ-SS-TC	P31EA12EGMBNLP
914519	EPF3102QIBT1MG161	2A-H0A-V-SS-K	P31EA12EGMBNLP
914525	EPF3105QIBM3MG161	2A-H0A-V-SS-TC	P31EA12EGMBNNP
914529	EPF3105QIVF3KG161	2A-H0L-KZ-SS-TC	P31EA12EGMBNNP
914530	EPF3110QIBM3MG161	2A-H0L-V-SS-K	P31EA12EGMBNSP
914534	EPF3110QIBT1MG161	2A-H0L-V-SS-TC	P31EA12EGMBNSP
914537	EPF3110QIHBF3MG162	2A-H1L-BN-SS-K	P31EA12EGMBNTP
914540	EPF3110QIHBPXG162	2A-H1L-V-SS-K	P31EA12EGMBNTP
914548	EPF3110QIHBT1MG162	2A-H1L-V-SS-TC	P31EA12EGMBNVP
914550	EPF3120QIBM3MG161	2A-H2A-V-SS-K	P31EA12EGMBNVP
914552	EPF3120QIHBM3MG162	2A-H2L-EPR-SS-K	P31EA12EGMBNYP
924189	EPF3202QIHBT1MG162	2A-H2L-V-SS-K	P31EA12EGMBNYP
924433	EPF3205QIBPMG161	2A-H2L-V-SS-TC	P31EA12EGMNNTP
924448	EPF3210QIBM3MG161	2A-H3A-V-SS-K	P31EA12EGMNNTP

924455	EPF3210QIBPMG161	2A-H3A-V-SS-TC	P31EA12EMBBNLP
924797	EPF3210QIBT1MG161	2A-H3L-KZ-SS-TC	P31EA12EMBBNLP
924927	EPF3210QIHBT1MG162	2A-H3L-V-SS-K	P31EA12EMBBNNP
925023	EPF3220QIBPMG161	2A-H3L-V-SS-TC	P31EA12EMBBNNP
925094	EPF3220QIBT1MH161	2A-H4A-V-SS-K	P31EA12EMBBNSP
925095	EPF3220QIRBT1KG16RFV	2A-H4L-V-SS-K	P31EA12EMBBNSP
925257	EPF4110QIBM3LG201	2A-H4L-V-SS-TC	P31EA12EMBBNTP
925258	EPF4110QIBM3MG201	2A-H5A-V-SS-K	P31EA12EMBBNTP
925260	EPF4110QIBPKG201	2A-H5A-V-SS-TC	P31EA12EMBBNVP
925261	EPF4110QIBPMG201	2A-H5L-V-SS-K	P31EA12EMBBNVP
925263	EPF4110QIBT1MG201	2A-H5L-V-SS-TC	P31EA12EMBBNYP
925265	EPF4120QIBM3MG201	2A-H6L-V-SS-K	P31EA12EMBBNYP
925267	EPF4120QIBT1MH201	2A-H6L-V-SS-TC	P31EA12EMMBNLP
925385	EPF4205QIBPMG201	2A-MB2LPFA-BP	P31EA12EMMBNLP
925394	EPF4210QIBT1MG201	2A-MB2LPFA-BP-C3	P31EA12EMMBNNP
926170	EPF4210QIBT1MH201	2A-MB2LPFA-SSP	P31EA12EMMBNNP
927422	EPF4210QIHBM3MG202	2A-MB2XPFA-BP	P31EA12EMMBNSP
927584	EPF4210QIHBT1MG202	2A-MB2XPFA-SSP	P31EA12EMMBNSP
928678	EPF4220QIVM3MH201	2A-MB6LPFA-BP	P31EA12EMMBNTP
928767	EPF5120QIRBT1KG24RFV	2A-MB6LPFA-SSP	P31EA12EMMBNTP
928932	EPFSK002	2A-NMA-BN-B-K	P31EA12EMMBNVP
929362	EPFSK003	2A-NMA-EPR-SS-K	P31EA12EMMBNVP
929446	EPK10	2A-NMA-V-SS-K	P31EA12EMMBNYP
929599	EPK12	2A-NMA-V-SS-V	P31EA12EMMBNYP
930114	EPK14	2A-NML-BN-B-K	P31FA129GBN
931153	EPK4	2A-NML-EPR-SS-V	P31FA129GBN
931411	EPK6	2A-NML-V-B-K	P31FA129GMN
931412	EPK8	2A-NML-V-SS-K	P31FA129GMN
931413	EPMK4	2A-NML-V-SS-V	P31FA129MBN
931414	EPMK6	2A-NSA-BN-B-K	P31FA129MBN
931873	EPP33C81I60010	2A-NSA-BN-B-V	P31FA129MMN
931877	EPP33C81I60010	2A-NSA-EPR-B-K	P31FA129MMN
931890	EPP33C81U60010	2A-NSA-EPR-SS-K	P31FA12AGMN
931899	EPP33C81U60010	2A-NSA-V-B-K	P31FA12AGMN
931900	EPP33C81U70010	2A-NSA-V-SS-K	P31FA12AMMN
931903	EPP33C81U70010	2A-NSA-V-SS-V	P31FA12AMMN
931921	EPP34CC1I60010	2A-NSL-BN-B-K	P31FA12CGBN
931925	EPP34CC1I60010	2A-NSL-BN-B-V	P31FA12CGBN
931927	EPP34CC1I70010	2A-NSL-BN-SS-K	P31FA12CGMN
931936	EPP34CC1I70010	2A-NSL-BN-SS-V	P31FA12CGMN
931937	EPP34CC1U60010	2A-NSL-EPR-SS-K	P31FA12CMBN
931956	EPP34CC1U60010	2A-NSL-EPR-SS-V	P31FA12CMBN
931966	EPP34CC1U70010	2A-NSL-KZ-SS-K	P31FA12CMMN
931974	EPP34CC1U70010	2A-NSL-KZ-SS-V	P31FA12CMMN
932019	EPP3BC41I10710	2A-NSL-V-B-K	P31FA12EGBN
932073	EPP3BC41I10710	2A-NSL-V-SS-K	P31FA12EGBN
932085	EPP3BC41I12810A	2A-NSL-V-SS-V	P31FA12EGMN
932097	EPP3BC41I12810A	2A-PG4L-SS	P31FA12EGMN
933127	EPP3BC41I17410	2A-PR4-BNT-SS	P31FA12EMBN
933134	EPP3BC41I17410	2A-PR4-VT-B	P31FA12EMBN
933146	EPP3JC41U90310	2A-PR4-VT-SS	P31FA12EMMN
933149	EPP3JC41U90310	2A-PR4VT-SS-C3	P31FA12EMMN
933180	EPP3JC41U91310	2A-V2AK-B	P31HA12BNLP

933335	EPP3JC41U91310	2A-V2AN-B	P31HA12BNLP
933407	ER01 L8 00	2A-V2AN-SS	P31HA12BNNP
933542	ER1-02-0000	2A-V2LK-B	P31HA12BNNP
933588	ER1-02-0000	2A-V2LK-SS	P31HA12BNYP
933720	ER1-02-P000	2A-V2LN-B	P31HA12BNYP
933829	ER1-02-P000	2A-V2LN-B-C3	P31KA00BGB
933853	ER1-04-P000	2A-V2LN-SS	P31KA00BGB
933903	ER1-04-P000	2A-V2LN-SS-C3	P31KA00BGM
933914	ER1-C2-B000	2A-V2LR-SS	P31KA00BGM
934102	ER1-C2-B000	2A-V2LR-V-SS	P31KA00BGN
934175	ER1-C2-BA00	2A-V4AQ-BP	P31KA00BGN
934205	ER1-C2-BA00	2A-V4AQ-SSP	P31KA00BMB
934891	ER1-C2-BAC0	2A-V4LK-BN-SS	P31KA00BMB
934892	ER1-C2-BAC0	2A-V4LK-SS	P31KA00BMM
935139	ER1-C4-0A00	2A-V4LN-SS	P31KA00BMM
935140	ER1-C4-0A00	2A-V4LN-SS-C3	P31KA00BMN
935141	ER1-C4-B000	2A-V4LQ-11AC-SS	P31KA00BMN
935142	ER1-C4-B000	2A-V4LQ-11AO-SS	P31KA00CB
935143	ER1-C4-BAH0	2A-V4LQ-BP	P31KA00CB
935144	ER1-C4-BAH0	2A-V4LQ-EPR-11AO-SS	P31KA00CY
935145	ER2B-10-0-00	2A-V4LQ-KZ-11AC-SS	P31KA00CY
935146	ER50M06BSC	2A-V4LQ-SSP	P31KA00ES9
935147	ERB32M10MA47FSS250A	2A-V4LR-SS	P31KA00ES9
935148	ERB50M16LA90FSS700AEUFJ	2B12S15M16	P31KA00ESA
935149	ERB50M16NA57FSR200AEUIH	2B16S10P16	P31KA00ESA
935150	ERB50M16NB57FSR200AEUIH	2B16S10P16-L	P31KA00ESC
935153	ERK0.2	2B2TU2-316	P31KA00ESC
935154	ERP-95-787	2B2TU4-316	P31KA00ESE
935157	ERP-95-787	2B4S10L8	P31KA00ESE
935158	ERP-95-793	2B4S15L2	P31KA00MM
935162	ERP-95-793	2B4S15L4	P31KA00MM
935173	ERP-95-794	2B4S15L4-EPR	P31KA00MP
935174	ERP-95-794	2B4S15L6	P31KA00MP
935176	ERV092N5M	2B4S15P2	P31KA00MR
935177	ERV101N3M	2B4S15P4	P31KA00MR
935178	ERV101N8M	2B4S15P6	P31KA00MT
935181	ERV102N5M	2B4S15P8	P31KA00MT
935182	ERV161N40M	2B4S15Q4	P31KA00MW
935191	ERV56M09-SP01	2B4S15Q6	P31KA00MW
935192	ES12MC	2B4S20H4	P31KA00PG
935193	ES12MC	2B4S20H6	P31KA00PG
935194	ES150MC	2B4S20H9	P31KA00PL
935196	ES150MC	2B4S20M4	P31KA00PL
935198	ES310/61S	2B4S20M6	P31KA00RB
935200	ES310/61SM	2B4S20M9	P31KA00RB
936760	ES310/61SU	2B6S10L8	P31KA00RC
936761	ES310/64S	2B6S10P6	P31KA00RC
937096	ES310/64SM	2B6S10P8	P31KA12CN
937720	ES310/64SU	2B6S15Q9	P31KA12CN
937721	ES312/74S	2B6S20M12	P31KA12CP
937722	ES312/74SM	2B6S20M16	P31KA12CP
937723	ES312/74SU	2B6S20M6	P31KA13CN
937724	ES312/77S	2B6S20M9	P31KA13CN

937725	ES312/77SM	2B6S20M9-AO	P31KA13CP
937726	ES312/77SU	2B6S20M9-BO	P31KA13CP
937727	ES312/81S	2B8S10L8-EPR	P31KA92CN
937728	ES312/81SM	2B8S10M12	P31KA92CN
937729	ES312/81SU	2B8S10M16	P31KA92CP
937730	ES32/16.5S	2B8S10M16-BO	P31KA92CP
937731	ES32/16.5SM	2B8S10P12	P31LA12LGNN
937732	ES32/16.5SU	2B8S10P8	P31LA12LGNN
937733	ES32/17.6S	2B8S15M12-EPR	P31LA12LMNN
937734	ES32/17.6SM	2B8S15M16	P31LA12LMNN
937807	ES32/17.6SU	2BC2-316	P31MA12022N
937808	ES33/20.5S	2BC2-6MO	P31MA12022N
937809	ES33/20.5SM	2BC2-B	P31PA12AD2AD1A
937812	ES33/20.5SU	2BC2-NNR	P31PA12AD2AD1A
937813	ES33/21.7S	2BC4-316	P31PA12AD2VD1A
937814	ES33/21.7SM	2BF2-316	P31PA12AD2VD1A
937815	ES33/21.7SU	2BF2-825	P31PA12AD2VM1A
937816	ES34/25.5S	2BF2-B	P31PA12AD2VM1A
937818	ES34/25.5SM	2BF2-M	P31PA12AD2VP1A
937819	ES34/25.5SU	2BF2-T	P31PA12AD2VP1A
937820	ES34/27.3S	2BLEN2-316	P31PA12AS2AD1A
937821	ES34/27.3SM	2BLEN2-825	P31PA12AS2AD1A
937918	ES34/27.3SU	2BLEN2-B	P31PA12AS2AM1A
937919	ES35/30.5S	2BLEN2-TTZ	P31PA12AS2AM1A
937958	ES35/30.5SM	2BLP2-316	P31PA12AS2VD1A
937959	ES35/30.5SU	2BLP2-6MO	P31PA12AS2VD1A
937967	ES35/32.5S	2BLP2-825	P31PA12AS2VM1A
937968	ES35/32.5SM	2BLP2-B	P31PA12AS2VM1A
938006	ES35/32.5SU	2BN2-316	P31PA12AS2VP1A
938087	ES35/34.2S	2C6MK4S	P31PA12AS2VP1A
938650	ES35/34.2SM	2C6MK4SS	P31PA12AZ2VD1A
938657	ES35/34.2SU	2D9EJ-12-12	P31PA12AZ2VD1A
938659	ES36/38.5S	2D9EJ-16-16	P31PA12ED2VD1A
938669	ES36/38.5SM	2D9EJ-20-20	P31PA12ED2VD1A
938683	ES36/38.5SU	2D9EJ-8-08	P31PA12ES2VP1A
938684	ES36/40.7S	2D9NC-16-16	P31PA12ES2VP1A
938694	ES36/40.7SM	2ECR2-316	P31PA92AD2VD1A
938699	ES36/40.7SU	2ECR2-B	P31PA92AD2VD1A
938706	ES36/43S	2ECR2-NNR	P31PA92AS2VM1A
938709	ES36/43SM	2EE2-316	P31PA92AS2VM1A
938717	ES36/43SU	2EE2-B	P31RA12BNLP
938887	ES37MC	2EE2-M	P31RA12BNLP
939017	ES37MC	2EE2-NNR	P31RA12BNNP
939018	ES38/49S	2EE2-TTZ	P31RA12BNNP
939148	ES38/49SM	2EMK4S	P31RA12BNSP
939149	ES38/49SSM	2ET2-316	P31RA12BNSP
939153	ES38/49SU	2ET2-B	P31RA12BNTP
939154	ES38/50.7S	2ET2-NNR	P31RA12BNTP
939155	ES38/50.7SM	2ET2-TTZ	P31RA12BNVP
939156	ES38/50.7SU	2EV102	P31RA12BNVP
939157	ES62/16.5S	2EV102	P31RA12BNYP
939158	ES62/16.5SM	2EV103	P31RA12BNYP
939161	ES62/16.5SU	2EV103	P31RA12NNLP

939164	ES62/17.6S	2EV105	P31RA12NNLP
939165	ES62/17.6SM	2EV105	P31RA12NNNP
939166	ES62/17.6SU	2EV107	P31RA12NNNP
939168	ES63/20.5S	2EV107	P31RA12NNSP
939170	ES63/20.5SM	2EV133	P31RA12NNSP
939184	ES63/20.5SU	2EV133	P31RA12NNTP
939185	ES63/21.7S	2EV135	P31RA12NNTP
939186	ES63/21.7SM	2EV135	P31RA12NNVP
939191	ES63/21.7SU	2EV143	P31RA12NNVP
939195	ES64/25.5S	2EV143	P31RA12NNYP
939264	ES64/25.5SM	2EV145	P31RA12NNYP
939285	ES64/25.5SU	2EV145	P31RA92BNNP
939313	ES64/27.3S	2EV147	P31RA92BNNP
939364	ES64/27.3SM	2EV147	P31RA92NNNP
939366	ES64/27.3SU	2F3MK4S	P31RA92NNNP
939373	ES65/30.5S	2F3MK4SS	P31RA92NNYP
939376	ES65/30.5SM	2FA2N-316	P31RA92NNYP
939377	ES65/30.5SU	2FA2N-HC	P31SA12PPN
939378	ES65/32.5S	2FA2R-316	P31SA12PPN
939384	ES65/32.5SM	2FA4N-316	P31SA12SGN0000
939385	ES65/32.5SS	2FA4N-HC	P31SA12SGN0000
939386	ES65/32.5SU	2F-B2LJ2-BN-SSP	P31SA12SGNC2CN
939394	ES65/34.2S	2F-B2LJ2-BP	P31SA12SGNC2CN
939395	ES65/34.2SM	2F-B2LJ2-EPR-SSP	P31TA12PPN
939404	ES65/34.2SU	2F-B2LJ2-SSP	P31TA12PPN
939405	ES66/38.5S	2F-B2LJ2-SSP-C3	P31TA12SGN0000
939406	ES66/38.5SM	2F-B2LJ2-V-SSP	P31TA12SGN0000
939414	ES66/38.5SU	2F-B2LJ-BP	P31TA12SGNC2CN
939416	ES66/40.7S	2F-B2LJ-EPR-SSP	P31TA12SGNC2CN
939453	ES66/40.7SM	2F-B2LJ-SSP	P31VA12LBNN
939571	ES66/40.7SU	2F-B2LJ-V-SSP	P31VA12LBNN
939829	ES66/42.8S	2F-B2XJ2-BP	P31VA12LSAN
940587	ES66/42.8SM	2F-B2XJ2-SSP	P31VA12LSAN
940811	ES66/42.8SU	2F-B2XJ2-SSP-C3	P31YA12GEBNTLNW
941529	ES68/49S	2F-B2XJ-BN-SSP	P31YA12GEBNTLNW
941540	ES68/49SM	2F-B2XJ-BP	P31YA12GEMNTLNW
941575	ES68/49SU	2F-B2XJ-SSP	P31YA12GEMNTLNW
941580	ES68/50.7S	2FBC2N-316	P31YA12MEBNTLNW
941583	ES68/50.7SM	2FBC2N-B	P31YA12MEBNTLNW
941584	ES68/50.7SU	2FBT2N-316	P31YA12MEMNTLNW
941585	ES75MC	2FBT2N-NNR	P31YA12MEMNTLNW
941589	ES75MC	2F-C2L-1/3-B	P31YN12GEBNTW
941591	ESB100MC	2F-C2L-1/3-EPR-SS	P31YN12GEBNTW
941596	ESB100MC	2F-C2L-1/3-SS	P31YN12GEMNTW
941599	ESB125MC	2F-C2L-100-BN-SS	P31YN12GEMNTW
941601	ESB125MC	2F-C2L-100-SS	P31YN12MEBNTW
941740	ESB12MC	2F-C2L-10-B	P31YN12MEBNTW
942972	ESB12MC	2F-C2L-10-BN-B	P31YN12MEMNTW
943358	ESB150MC	2F-C2L-10-BN-SS	P31YN12MEMNTW
943907	ESB150MC	2F-C2L-10-EPR-B	P3210NH
943908	ESB25MC	2F-C2L-10-EPR-SS	P-3289
944101	ESB25MC	2F-C2L-10-SS	P32CA12GEANGLNW
944108	ESB37MC	2F-C2L-1-B	P32CA12GEANGLNW

944114	ESB37MC	2F-C2L-1-EPR-B	P32CA12GEMNGLNW
944117	ESB50MC	2F-C2L-1-EPR-SS	P32CA12GEMNGLNW
944124	ESB50MC	2F-C2L-1-SS	P32CA12SEANGLNW
944126	ESB75MC	2F-C2L-25-EPR-SS	P32CA12SEANGLNW
944129	ESB75MC	2F-C2L-25-SS	P32CA12SEMNGLNW
944131	ESG310/61S	2F-C2L-50-SS	P32CA12SEMNGLNW
944134	ESG310/64S	2F-C2L-5-B	P32CA13GEANGLNW
944135	ESG312/74S	2F-C2L-5-BN-SS	P32CA13GEANGLNW
944139	ESG312/77S	2F-C2L-5-EPR-SS	P32CA13GEMNGLNW
944145	ESG312/81S	2F-C2L-5-SS	P32CA13GEMNGLNW
944147	ESG32/16.5S	2F-C2L-75-EPR-SS	P32CA13SEANGLNW
944151	ESG32/17.6S	2F-C4L-1/3-B	P32CA13SEANGLNW
944153	ESG33/20.5S	2F-C4L-1/3-SS	P32CA13SEMNGLNW
944157	ESG33/21.7S	2F-C4L-100-EPR-B	P32CA13SEMNGLNW
944162	ESG34/25.5S	2F-C4L-100-EPR-SS	P32CA14GEANGLNW
944165	ESG34/27.3S	2F-C4L-100-SS	P32CA14GEANGLNW
944167	ESG35/30.5S	2F-C4L-10-EPR-B	P32CA14GEMNGLNW
944173	ESG35/32.5S	2F-C4L-10-SS	P32CA14GEMNGLNW
944175	ESG35/34.2S	2F-C4L-1-B	P32CA14SEANGLNW
944184	ESG36/38.5S	2F-C4L-1-SS	P32CA14SEANGLNW
944186	ESG36/40.7S	2F-C4L-25-EPR-B	P32CA14SEMNGLNW
944191	ESG36/43S	2F-C4L-25-SS	P32CA14SEMNGLNW
944200	ESG38/49S	2F-C4L-5-B	P32CB12GEANGLNW
944202	ESG38/50.7S	2F-C4L-5-BN-B	P32CB12GEANGLNW
944205	ESG62/16.5S	2F-C4L-5-SS	P32CB12GEMNGLNW
944252	ESG62/17.6S	2FEL2N-316	P32CB12GEMNGLNW
944315	ESG63/20.5S	2FEL4N-316	P32CB12SEANGLNW
944322	ESG63/21.7S	2FF2-316	P32CB12SEANGLNW
944324	ESG64/25.5S	2FF2-825	P32CB12SEMNGLNW
944336	ESG64/27.3S	2FF2-B	P32CB12SEMNGLNW
944341	ESG65/30.5S	2FF2-HC	P32CB13GEANGLNW
944345	ESG65/32.5S	2F-F2L-100-SS	P32CB13GEANGLNW
944349	ESG65/34.2S	2F-F2L-10-B	P32CB13GEMNGLNW
944354	ESG66/38.5S	2F-F2L-10-BN-B	P32CB13GEMNGLNW
944355	ESG66/40.7S	2F-F2L-10-SS	P32CB13SEANGLNW
944359	ESG66/42.8S	2F-F2L-1-B	P32CB13SEANGLNW
944360	ESG68/49S	2F-F2L-1-EPR-SS	P32CB13SEMNGLNW
944361	ESG68/50.7S	2F-F2L-1-SS	P32CB13SEMNGLNW
944362	ESH-08-100	2F-F2L-50-SS	P32CB14GEANGLNW
944364	ESH-08-120	2F-F2L-5-B	P32CB14GEANGLNW
944367	ESH-08-150	2F-F2L-5-SS	P32CB14GEMNGLNW
944375	ESH-08-50	2FF2-M	P32CB14GEMNGLNW
944376	ESH-08-60	2FF2-T	P32CB14SEANGLNW
944378	ESH-08-80	2FFMSS	P32CB14SEANGLNW
944382	ESH-12-100	2F-FR2-KZ-P99-SS-A	P32CB14SEMNGLNW
944385	ESH-12-120	2F-FR2-V-C99-SS-A	P32CB14SEMNGLNW
944393	ESH-12-150	2F-FR2-V-P99-SS-A	P32DA14PPN
944395	ESH-12-200	2F-FR2-V-S10-SS-A	P32DA14PPN
944396	ESH-12-50	2F-FT4-100-SS	P32DA14SCN0000
944399	ESH-12-80	2F-FT4-10-SS	P32DA14SCN0000
944415	ESH-16-100	2F-FT4-1-SS	P32DA14SCNA2CN
944496	ESH-16-120	2F-FT4-450-SS	P32DA14SCNA2CN
944499	ESH-16-150	2F-FT4-50-SS	P32DA14SCND2CN

944505	ESH-16-160	2F-FT4-5-SS	P32DA14SCND2CN
944506	ESH-16-180	2F-H0A-V-SS-TC	P32EA12EGABNGP
944508	ESH-16-200	2F-H0L-V-SS-K	P32EA12EGABNGP
944530	ESH-16-240	2F-H0L-V-SS-TC	P32EA12EGABNLP
944730	ESH-16-40	2F-H0L-V-SS-TC-C3	P32EA12EGABNLP
945170	ESH-16-80	2F-H1L-V-SS-K	P32EA12EGABNMP
945228	ESH-20-120	2F-H1L-V-SS-TC	P32EA12EGABNMP
945269	ESH-20-150	2F-H2L-BN-SS-TC	P32EA12EGABNNP
945288	ESH-20-200	2F-H2L-V-SS-K	P32EA12EGABNNP
945331	ESH-20-240	2F-H2L-V-SS-TC	P32EA12EGABNYP
945339	ESH250-08-100	2F-H3A-V-SS-K	P32EA12EGABNYP
945425	ESH250-08-120	2F-H3A-V-SS-TC	P32EA12EGABNZP
945439	ESH250-08-160	2F-H3L-V-SS-K	P32EA12EGABNZP
945573	ESH250-08-180	2F-H3L-V-SS-TC	P32EA12EGMBNGP
945624	ESH250-08-40	2F-H4L-EPR-SS-K	P32EA12EGMBNGP
945653	ESH250-08-60	2F-H4L-V-SS-K	P32EA12EGMBNLP
945739	ESH250-08-80	2F-H4L-V-SS-TC	P32EA12EGMBNLP
945936	ESH250-12-100	2F-H5L-V-SS-K	P32EA12EGMBNMP
946297	ESH250-12-120	2F-H5L-V-SS-TC	P32EA12EGMBNMP
946298	ESH250-12-160	2F-H6A-V-SS-TC	P32EA12EGMBNNP
946400	ESH250-12-200	2F-H6L-BN-SS-TC	P32EA12EGMBNNP
946401	ESH250-12-60	2F-H6L-V-SS-K	P32EA12EGMBNYP
946779	ESH250-12-80	2F-H6L-V-SS-TC	P32EA12EGMBNYP
946780	ESH250-16-120	2F-LC6L-SS	P32EA12EGMBNZP
946782	ESH250-16-160	2F-MB4LPFA-BP	P32EA12EGMBNZP
946829	ESH250-16-180	2F-MB4LPFA-SSP	P32EA12ESABNGP
946880	ESH250-16-200	2F-MB4XPFA-BP	P32EA12ESABNGP
947083	ESH250-16-220	2F-MB4XPFA-BP-C3	P32EA12ESABNHP
947530	ESH250-16-240	2F-MB4XPFA-SSP	P32EA12ESABNHP
947692	ESH250-16-280	2F-MB4XPFA-SSP-C3	P32EA12ESABNJP
947697	ESH250-16-300	2F-MB6LPFA-BP	P32EA12ESABNJP
947740	ESH250-16-400	2F-MB6LPFA-SSP	P32EA12ESABNLM
947764	ESH250-16-80	2F-MB6X4PFA-SSP	P32EA12ESABNLM
947765	ESH250-20-120	2F-MB6X4PFA-SSP-C3	P32EA12ESABNLP
947811	ESH250-20-150	2F-MB6X5PFA-SSP	P32EA12ESABNLP
947815	ESH250-20-160	2F-MB6X5PFA-SSP-C3	P32EA12ESABNMP
947817	ESH250-20-200	2FMK4S	P32EA12ESABNMP
947819	ESH250-20-300	2F-NLL-BN-B-K	P32EA12ESABNNP
947840	ESH250-20-60	2F-NLL-BN-B-V	P32EA12ESABNNP
947863	ESH250PLUS-08-120	2F-NLL-BN-SS-K	P32EA12ESABNYP
947867	ESH250PLUS-08-180	2F-NLL-V-SS-K	P32EA12ESABNYP
947869	ESH250PLUS-08-40	2F-NLL-V-SS-V	P32EA12ESABNZP
947871	ESH250PLUS-08-80	2F-NMA-V-SS-K	P32EA12ESABNZP
947873	ESH250PLUS-12-120	2F-NMA-V-SS-V	P32EA12ESMBNGP
947875	ESH250PLUS-12-160	2FNMK4S	P32EA12ESMBNGP
948021	ESH250PLUS-12-180	2F-NML-BN-B-K	P32EA12ESMBNHP
948023	ESH250PLUS-12-220	2F-NML-BN-B-V	P32EA12ESMBNHP
948106	ESH250PLUS-12-350	2F-NML-BN-SS-K	P32EA12ESMBNJP
948125	ESH250PLUS-12-80	2F-NML-EPR-SS-V	P32EA12ESMBNJP
948381	ESH250PLUS-16-120	2F-NML-V-SS-K	P32EA12ESMBNLP
948383	ESH250PLUS-16-160	2F-NML-V-SSK-C3	P32EA12ESMBNLP
948385	ESH250PLUS-16-180	2F-NML-V-SS-V	P32EA12ESMBNMP
948502	ESH250PLUS-16-200	2F-PR4-EPRT-SS	P32EA12ESMBNMP

948511	ESH250PLUS-16-240	2F-PR4-VT-B	P32EA12ESMBNNP
948581	ESH250PLUS-16-250	2F-PR4-VT-SS	P32EA12ESMBNNP
948670	ESH250PLUS-16-300	2F-R2EMK-V-SS	P32EA12ESMBNYP
948865	ESH250PLUS-16-400	2F-R2EMK-V-SS-GC	P32EA12ESMBNYP
948955	ESH250PLUS-16-80	2F-R2EMK-V-SS-IF	P32EA12ESMBNZP
948973	ESH250PLUS-16-DL	2F-R2GCK-KZ-SS	P32EA12ESMBNZP
948974	ESH250PLUS-20-120	2F-R2GCK-KZ-SS-2	P32EA13EGABNGP
948975	ESH250PLUS-20-140	2F-R2GCK-KZ-SS-3	P32EA13EGABNGP
948977	ESH250PLUS-20-160	2F-R2GCK-KZ-SS-5	P32EA13EGABNLP
948978	ESH250PLUS-20-180	2F-R2GCK-NE-SS-2	P32EA13EGABNLP
948980	ESH250PLUS-20-200	2F-R2GCK-V-SS	P32EA13EGABNMP
948981	ESH250PLUS-20-240	2F-R2GCK-V-SS-1	P32EA13EGABNMP
948982	ESH250PLUS-20-285	2F-R2GCK-V-SS-10	P32EA13EGABNNP
948985	ESH250PLUS-20-300	2F-R2GCK-V-SS-11	P32EA13EGABNNP
949040	ESH250PLUS-20-60	2F-R2GCK-V-SS-2	P32EA13EGABNYP
949067	ESH250PLUS-20-80	2F-R2GCK-V-SS-3	P32EA13EGABNYP
949068	ESL310/74S	2F-R2GCK-V-SS-4	P32EA13EGABNZP
949311	ESL310/74SM	2F-R2GCK-V-SS-5	P32EA13EGABNZP
949841	ESL310/74SU	2F-R2GCK-V-SS-6	P32EA13EGMBNGP
950387	ESL310/77S	2F-R2GCK-V-SS-7	P32EA13EGMBNGP
950525	ESL310/77SM	2F-R2GCK-V-SS-8	P32EA13EGMBNHP
951474	ESL310/77SU	2F-R2K-BN-SS-3	P32EA13EGMBNHP
951667	ESL310/81S	2F-R2K-EPR-SS-10	P32EA13EGMBNLP
951670	ESL310/81SM	2F-R2K-EPR-SS-4	P32EA13EGMBNLP
952208	ESL310/81SU	2F-R2K-KZ-SS-1	P32EA13EGMBNMP
953945	ESL312/90.5S	2F-R2K-KZ-SS-2	P32EA13EGMBNMP
954120	ESL312/90.5SM	2F-R2K-KZ-SS-3	P32EA13EGMBNNP
958221	ESL312/90.5SU	2F-R2K-KZ-SS-4	P32EA13EGMBNNP
958468	ESL32/20.5S	2F-R2K-KZ-SS-6	P32EA13EGMBNYP
958534	ESL32/20.5SM	2F-R2K-KZ-SS-7-IF	P32EA13EGMBNYP
958535	ESL32/20.5SU	2F-R2K-V-SS-1	P32EA13EGMBNZP
958560	ESL32/21.7S	2F-R2K-V-SS-2	P32EA13EGMBNZP
958561	ESL32/21.7SM	2F-R2K-V-SS-2-IF	P32EA13ESABNGP
958707	ESL32/21.7SU	2F-R2K-V-SS-3	P32EA13ESABNGP
958825	ESL33/25.5S	2F-R2K-V-SS-3-IF	P32EA13ESABNHP
958886	ESL33/25.5SM	2F-R2K-V-SS-3-RTK	P32EA13ESABNHP
959000	ESL33/25.5SU	2F-R2K-V-SS-4	P32EA13ESABNJP
959045	ESL33/27.3S	2F-R2K-V-SS-4-IF	P32EA13ESABNJP
959047	ESL33/27.3SM	2F-R2K-V-SS-5	P32EA13ESABNLP
959224	ESL33/27.3SU	2F-R2K-V-SS-6	P32EA13ESABNLP
959231	ESL34/30.5S	2F-R2K-V-SS-6-IF	P32EA13ESABNMP
959241	ESL34/30.5SM	2F-R2K-V-SS-7	P32EA13ESABNMP
959243	ESL34/30.5SU	2F-R2K-V-SS-8	P32EA13ESABNNP
959249	ESL34/32.5S	2F-R2K-V-SS-8-IF	P32EA13ESABNNP
959284	ESL34/32.5SM	2F-R2-K-V-SS-9	P32EA13ESABNYP
959376	ESL34/32.5SU	2F-R2LSK-KZ-SS	P32EA13ESABNYP
959378	ESL34/34S	2F-R2SK-KZ-SS	P32EA13ESABNZP
959470	ESL34/34SM	2F-R2SK-V-SS	P32EA13ESABNZP
959573	ESL34/34SU	2FRT2N-316	P32EA13ESMBNGP
959878	ESL34/35.5S	2FRT4N-316	P32EA13ESMBNGP
960159	ESL34/35.5SM	2FSC2K-316	P32EA13ESMBNHP
962943	ESL34/35.5SU	2FSC2N-316	P32EA13ESMBNHP
966709	ESL35/38.5S	2FSC2N-B	P32EA13ESMBNJP

967747	ESL35/38.5SM	2FSC4GC-316	P32EA13ESMBNJP
967822	ESL35/38.5SU	2FSC4N-316	P32EA13ESMBNLP
968060	ESL35/40.5S	2FSC4N-B	P32EA13ESMBNLP
969169	ESL35/40.5SM	2FSC4N-M	P32EA13ESMBNMP
969223	ESL35/40.5SU	2FSC4R-316	P32EA13ESMBNMP
969224	ESL35/43/12SSM	2F-U6LR-G-SS	P32EA13ESMBNNP
969279	ESL35/43S	2F-U6LR-T-SS	P32EA13ESMBNNP
969707	ESL35/43SM	2F-V2LK-SS	P32EA13ESMBNYP
970828	ESL35/43SU	2F-V2LN-B	P32EA13ESMBNYP
973198	ESL36/49S	2F-V2LN-EPR-SS	P32EA13ESMBNZP
973439	ESL36/49SM	2F-V2LN-SS	P32EA13ESMBNZP
974076	ESL36/49SU	2F-V2LR-SS	P32EA14EGABNGP
974095	ESL36/50.4S	2F-V4AN-B	P32EA14EGABNGP
974109	ESL36/50.4SM	2F-V4AQ-BP	P32EA14EGABNLP
974111	ESL36/50.4SU	2F-V4LK-B	P32EA14EGABNLP
974190	ESL38/61S	2F-V4LN-B	P32EA14EGABNMP
974191	ESL38/61SM	2F-V4LN-SS	P32EA14EGABNMP
974328	ESL38/61SU	2F-V4LQ-11AC-B	P32EA14EGABNNP
974584	ESL38/65.8S	2F-V4LQ-11AC-SS	P32EA14EGABNNP
975614	ESL38/65.8SM	2F-V4LQ-BP	P32EA14EGABNYP
975615	ESL38/65.8SU	2F-V4LQ-KZ-11AC-SS	P32EA14EGABNYP
975616	ESL62/20.5S	2F-V4LQ-SSP	P32EA14EGABNZP
976638	ESL62/20.5SM	2F-V4LR-B	P32EA14EGABNZP
976639	ESL62/20.5SU	2F-V4LR-SS	P32EA14EGMBNGP
976641	ESL62/21.7S	2HMK4S	P32EA14EGMBNGP
976642	ESL62/21.7SM	2HMK4SS	P32EA14EGMBNLP
976643	ESL62/21.7SU	2HPMSS	P32EA14EGMBNLP
976823	ESL62/22.5S	2JMK4S	P32EA14EGMBNMP
976929	ESL62/22.5SM	2K-2 RA-SS	P32EA14EGMBNMP
977612	ESL62/22.5SU	2KRAW13IW13	P32EA14EGMBNNP
977613	ESL63/25.7S	2KRAW13IW13	P32EA14EGMBNNP
977614	ESL63/25.7SM	2KRAW13IW1390	P32EA14EGMBNYP
977615	ESL63/25.7SU	2M1SC2-316	P32EA14EGMBNYP
977616	ESL63/27.3S	2M1SC6-316	P32EA14EGMBNZP
977617	ESL63/27.3SM	2M2A-V2LN-SS	P32EA14EGMBNZP
977618	ESL63/27.3SU	2M2F-B2LJ2-SSP	P32EA14ESABNGP
977619	ESL63/28.7S	2M2F-B2LJ-SSP	P32EA14ESABNGP
1200127	ESL63/28.7SM	2M2F-V4LN-B	P32EA14ESABNHP
1300669	ESL63/28.7SU	2M2F-V4LN-BN-B	P32EA14ESABNHP
1300671	ESL64/34S	2M2SC2-316	P32EA14ESABNJP
1300812	ESL64/34SM	2M3SC2-316	P32EA14ESABNJP
1301609	ESL64/34SU	2MA2K-316	P32EA14ESABNLP
1302151	ESL64/35.5S	2MA2N-316	P32EA14ESABNLP
1440.079	ESL64/35.5SM	2MA4N-316	P32EA14ESABNMP
1440.087	ESL64/35.5SU	2MA4R-316	P32EA14ESABNMP
1441.105	ESLG310/74S	2M-B2LJ2-BN-SSP	P32EA14ESABNNP
1441.109	ESLG310/77S	2M-B2LJ2-BP	P32EA14ESABNNP
1441.111	ESLG310/81S	2M-B2LJ2-SSP	P32EA14ESABNYP
1442.088	ESLG312/90.5S	2M-B2LJ-BP	P32EA14ESABNYP
1442.094	ESLG32/20.5S	2M-B2LJ-SSP	P32EA14ESABNZP
1442.099	ESLG32/21.7S	2M-B2XJ2-SSP	P32EA14ESABNZP
1442.103	ESLG33/25.5S	2M-B2XJ-SSP	P32EA14ESMBNGP
1442.105	ESLG33/27.3S	2MBC2N-316	P32EA14ESMBNGP

1442.137	ESLG34/30.5S	2MBT2N-316	P32EA14ESMBNHP
1443.093	ESLG34/32.5S	2MBT4N-316	P32EA14ESMBNHP
1488318	ESLG34/34S	2MBT4N-B	P32EA14ESMBNJP
1488336	ESLG34/35.5S	2M-BV4-SS	P32EA14ESMBNJP
1697393	ESLG35/38.5S	2M-BV4-SS-BVT-T	P32EA14ESMBNLP
6603-4-4	ESLG35/40.5S	2M-BV4-SS-T	P32EA14ESMBNLP
6603-6-6	ESLG35/43S	2M-C2L-1/3-SS	P32EA14ESMBNMP
6603-8-10	ESLG36/49S	2M-C2L-100-B	P32EA14ESMBNMP
6603-12-12	ESLG36/50.4S	2M-C2L-100-SS	P32EA14ESMBNNP
6605-4-4	ESLG38/61S	2M-C2L-10-B	P32EA14ESMBNNP
6605-6-6	ESLG38/65.8S	2M-C2L-10-BN-B	P32EA14ESMBNYP
6605-8-10	ESLG62/20.5S	2M-C2L-10-BN-SS	P32EA14ESMBNYP
6605-12-12	ESLG62/21.7S	2M-C2L-10-EPR-SS	P32EA14ESMBNZP
1860167	ESLG62/22.5S	2M-C2L-10-SS	P32EA14ESMBNZP
1860182	ESLG63/25.7S	2M-C2L-1-B	P32FA12AGMN
1871872	ESLG63/27.3S	2M-C2L-1-EPR-SS	P32FA12AGMN
1879505	ESLG63/28.7S	2M-C2L-1-SS	P32FA12ASMN
2110841	ESLG64/34S	2M-C2L-25-B	P32FA12ASMN
2110841	ESLG64/35.5S	2M-C2L-25-SS	P32FA12DGAN
2110842	ESRACT07-NEBE	2M-C2L-50-B	P32FA12DGAN
2110842	ESV06L	2M-C2L-50-SS	P32FA12DGMN
2110843	ESV06L71	2M-C2L-5-B	P32FA12DGMN
2110843	ESV06L71X	2M-C2L-5-BN-B	P32FA12DSAN
2110844	ESV06LX	2M-C2L-5-BN-SS	P32FA12DSAN
2110844	ESV06S	2M-C2L-5-SS	P32FA12DSMN
2110846	ESV06S71	2M-C2L-75-SS	P32FA12DSMN
2110846	ESV06S71X	2M-C4L-1/3-B	P32FA12EGAN
2114110	ESV06SX	2M-C4L-1/3-BN-B	P32FA12EGAN
2114110	ESV06ZL	2M-C4L-1/3-SS	P32FA12EGMN
2115602	ESV06ZL71	2M-C4L-10-SS	P32FA12EGMN
2115602	ESV06ZS	2M-C4L-1-B	P32FA12ESAN
2132138	ESV08L	2M-C4L-1-BN-SS	P32FA12ESAN
2132138	ESV08L71	2M-C4L-1-SS	P32FA12ESMN
2132139	ESV08L71X	2M-C4L-25-BN-SS	P32FA12ESMN
2132139	ESV08LX	2M-C4L-25-SS	P32FA12QGAN
2134013	ESV08S	2M-C4L-5-BN-B	P32FA12QGAN
2134013	ESV08S71	2M-C4L-5-SS	P32FA12QGMN
2134103	ESV08S71X	2M-F2L-10-BN-B	P32FA12QGMN
2134103	ESV08SSA471X	2M-F2L-10-SS	P32FA12QSAN
2134139	ESV08SX	2M-F2L-1-SS	P32FA12QSAN
2134139	ESV08ZL	2M-F2L-5-SS	P32FA12QSMN
2134148	ESV08ZL71	2M-PG4L-B	P32FA12QSMN
2134148	ESV08ZS	2M-PG4L-SS	P32FA13AGMN
2134149	ESV08ZS71	2M-PR4-VT-B	P32FA13AGMN
2134149	ESV10L	2M-PR4-VT-SS	P32FA13ASMN
2136046	ESV10L71	2MRT2N-316	P32FA13ASMN
2136046	ESV10L71X	2MRT2N-B	P32FA13DGMN
2136115	ESV10LX	2MRT4N-316	P32FA13DGMN
2136115	ESV10S	2MSC1N-316	P32FA13DSAN
2136138	ESV10S71	2MSC1N-NNR	P32FA13DSAN
2136138	ESV10S71X	2MSC2K-316	P32FA13DSMN
2136139	ESV10SX	2MSC2K-B	P32FA13DSMN
2136139	ESV10ZL	2MSC2N-316	P32FA13EGAN

2136148	ESV10ZL71	2MSC2N-825	P32FA13EGAN
2136148	ESV10ZS	2MSC2N-B	P32FA13EGMN
2136149	ESV10ZS71	2MSC2N-NNR	P32FA13EGMN
2136149	ESV10ZSVIT	2MSC2R-316	P32FA13ESAN
2136806	ESV12L	2MSC2R-ED-316	P32FA13ESAN
2136806	ESV12L71	2MSC2R-EDV-316	P32FA13ESMN
2137116	ESV12L71X	2MSC4K-316	P32FA13ESMN
2137116	ESV12LX	2MSC4N-316	P32FA13QGAN
2137149	ESV12S	2MSC4N-825	P32FA13QGAN
2137149	ESV12S71	2MSC4N-B	P32FA13QGMN
2137702	ESV12S71X	2MSC4N-M	P32FA13QGMN
2137702	ESV12SSA671X	2MSC4N-NNR	P32FA13QSAN
2137709	ESV12SX	2MSC4R-316	P32FA13QSAN
2137709	ESV12ZL	2MSC4R-M	P32FA13QSMN
2139015	ESV12ZL71	2MSC4R-NNR	P32FA13QSMN
2139015	ESV12ZLVIT	2MSC6N-316	P32FA14AGMN
2139045	ESV12ZS	2MSC6R-316	P32FA14AGMN
2139045	ESV12ZS71	2MSC8N-316	P32FA14ASMN
2139050	ESV14S	2MSEL1N-316	P32FA14ASMN
2139050	ESV14S71	2MSEL2N-316	P32FA14DGAN
2139060	ESV14S71X	2MSEL2N-6MO	P32FA14DGAN
2139060	ESV14SX	2MSEL2N-B	P32FA14DGMN
2139061	ESV15L	2MSEL4K-316	P32FA14DGMN
2139061	ESV15L71	2MSEL4N-316	P32FA14DSAN
2139065	ESV15L71X	2MSEL4N-6MO	P32FA14DSAN
2139065	ESV15LX	2MSEL4N-B	P32FA14DSMN
2146677	ESV15ZL	2MTC1N-316	P32FA14DSMN
2146677	ESV15ZL71	2MTC2K-316	P32FA14EGAN
2146899	ESV15ZLVIT	2MTC2N-316	P32FA14EGAN
2146899	ESV16S	2MTC2R-316	P32FA14EGMN
2147900	ESV16S71	2MTC4N-316	P32FA14EGMN
2147900	ESV16S71X	2MTC4N-825	P32FA14ESAN
2147950	ESV16SSA371X	2M-V2AN-SS	P32FA14ESAN
2147950	ESV16SX	2M-V2LK-B	P32FA14ESMN
2149015	ESV16ZS	2M-V2LN-BN-SS	P32FA14ESMN
2149015	ESV16ZS71	2M-V2LN-SS	P32FA14QGAN
2149020	ESV16ZSVIT	2M-V2LN-V-SS	P32FA14QGAN
2149020	ESV18L	2M-V2LR-SS	P32FA14QGMN
2149025	ESV18L71	2M-V4AN-B	P32FA14QGMN
2149025	ESV18L71X	2M-V4LK-SS	P32FA14QSAN
2149045	ESV18LX	2M-V4LQ-11AC-SS	P32FA14QSAN
2149045	ESV18ZL	2NU2-316	P32FA14QSMN
2149050	ESV18ZL71	2NU2-825	P32FA14QSMN
2149050	ESV20S	2NU2-B	P32FA93ESAN
2149060	ESV20S71	2NU2-HC	P32FA93ESAN
2149060	ESV20S71X	2NU2-TI	P32FA94ESAN
2149062	ESV20SX	2NUK2-316	P32FA94ESAN
2149062	ESV20ZS	2-P-283	P32HA12BNHP
2149065	ESV20ZS71	2-P-312	P32HA12BNHP
2149065	ESV20ZSVIT	2-P-458	P32HA12BNLP
2149080	ESV22L	2-P-473	P32HA12BNLP
2149080	ESV22L71	2-P-477	P32HA12BNNP
2149105	ESV22L71X	2-P-481	P32HA12BNNP

2149105	ESV22LX	2-P-637	P32HA12BNYP
2149115	ESV22ZL	2-P-638	P32HA12BNYP
2149115	ESV22ZL71	2-P-682	P32HA13BNHP
2149120	ESV22ZLVIT	2-P-683	P32HA13BNHP
2149120	ESV25S	2-P-688	P32HA13BNLP
2150023	ESV25S71	2-P-712	P32HA13BNLP
2150023	ESV25S71X	2-P-728	P32HA13BNNP
2150073	ESV25SX	2-P-731X	P32HA13BNNP
2150073	ESV25ZS	2-P-752	P32HA13BNYP
2150075	ESV25ZS71	2-P-753	P32HA13BNYP
2150075	ESV25ZSVIT	2-P-754	P32HA14BNHP
2150093	ESV28L	2-P-764	P32HA14BNHP
2150093	ESV28L71	2-P-767	P32HA14BNLP
2150113	ESV28L71X	2-P-826	P32HA14BNLP
2150113	ESV28LX	2-P-844	P32HA14BNNP
2150263	ESV28ZL	2-P-858	P32HA14BNNP
2150263	ESV28ZL71	2-P-862	P32HA14BNYP
2150273	ESV28ZLVIT	2-P-865	P32HA14BNYP
2150273	ESV30S	2-P-866	P32KA/A00001
2150275	ESV30S71	2-P-872	P32KA/A00001
2150275	ESV30S71X	2-P-873	P32KA00BGA
2150313	ESV30SSA371X	2-P-874	P32KA00BGA
2150313	ESV30SX	2PAT2	P32KA00BGM
2150473	ESV30ZS	2PC2-316	P32KA00BGM
2150473	ESV30ZS71	2PC4-316	P32KA00BGN
2150493	ESV30ZSVIT	2PC4-B	P32KA00BGN
2150493	ESV35L	2PCM6-316	P32KA00BSA
2150495	ESV35L71	2PH-625	P32KA00BSA
2150495	ESV35L71X	2PH-6MO	P32KA00BSM
2150513	ESV35LX	2PNMK4S	P32KA00BSM
2150513	ESV35ZL	2PNMK4SS	P32KA00BSN
2150603	ESV35ZL71	2R PH-SS	P32KA00BSN
2150603	ESV35ZLVIT	2R-2 RA-SS	P32KA00CB
2150605	ESV38S	2R6MK4S	P32KA00CB
2150605	ESV38S71	2RF4M-C4L-5-SS	P32KA00CY
2150673	ESV38S71X	2RU1-316	P32KA00CY
2150673	ESV38SSA171X	2RU1-B	P32KA00DA
2150823	ESV38SX	2S6MK4S	P32KA00DA
2150823	ESV38ZS	2SC2-316	P32KA00ES9
2151183	ESV38ZS71	2SC2-825	P32KA00ES9
2151183	ESV42L	2SC2-B	P32KA00ESA
2151193	ESV42L71	2SC2-M	P32KA00ESA
2151193	ESV42L71X	2SC2-NNR	P32KA00ESC
2151195	ESV42LX	2SC2-TTZ	P32KA00ESC
2151195	ESV42ZL	2TUBC2-316	P32KA00ESE
2151200	ESV42ZL71	2TUCM2-316	P32KA00ESE
2151200	ET00-104	2TUCM3-316	P32KA00MB
2151203	ET06L71	2TUCM6-316	P32KA00MB
2151203	ET06LCF	2TUR1-316	P32KA00ML
2151205	ET06LMED71	2TUR2-316	P32KA00ML
2151205	ET06LMEDOMDCF	2TUR3-316	P32KA00MM
2151210	ET06LOMD71	2TUR4-316	P32KA00MM
2151210	ET06LOMDCF	2TUR6-316	P32KA00MP

2151213	ET06LRED71	2TUR8-316	P32KA00MP
2151213	ET06LREDCF	2X11/4PTRMSS	P32KA00MR
2151215	ET06LREDCRCF	2X6TU2-316	P32KA00MR
2151215	ET06LREDOMDCF	2X80N-04V10	P32KA00MS
2151220	ET06LVITOMDCF	2X80N-04V16	P32KA00MS
2151220	ET06S71	2X80N-06V10	P32KA00MT
2151222	ET06SCF	2X80N-06V10-DL	P32KA00MT
2151222	ET06SOMD71	2X80N-12V10	P32KA00PG
2151223	ET06SOMDCF	2XASC2-316	P32KA00PG
2151223	ET06SOMDCFVOL	3 BTX-S	P32KA00PL
2151225	ET06SREDCF	3 BZ-B	P32KA00PL
2151225	ET06SVITOMDCF	3 BZ-SS	P32KA00RB
2151233	ET06ZL71	3 C5OX-S	P32KA00RB
2151233	ET06ZLCF	3 C6X-S	P32KA00RC
2151243	ET06ZLMEDCF	3 CTX-S	P32KA00RC
2151243	ET06ZLREDCF	3 ETX-S	P32KA00RQ
2151249	ET06ZS71	3 F5OX-S	P32KA00RQ
2151249	ET06ZSCF	3 FNTX-S	P32KA12CP
2151252	ET08L71	3 FNZ-SS	P32KA12CP
2151252	ET08LCF	3 FTX-S	P32KA13CP
2151253	ET08LDPR71CF	3 HBU-S	P32KA13CP
2151253	ET08LMEDCF	3 HP5ON-S	P32KA14CP
2151263	ET08LMEDOMD71	3 HP5ON-S V0894	P32KA14CP
2151263	ET08LOMD71	3 HP5ON-SS	P32KA16CP
2157118	ET08LOMDCF	3 HTX-S	P32KA16CP
2157118	ET08LRED71	3 P5ON-S	P32LA12LGNN
2157178	ET08LREDCF	3 PNBZ-SS	P32LA12LGNN
2157178	ET08LREDOMDCF	3 PNTX-S	P32LA12LSNN
2158048	ET08LVITCF	3 TIZ .125-SS	P32LA12LSNN
2158048	ET08LVITOMDCF	3 TX-S	P32LA13LGNN
2158068	ET08S71	3 TZ-B	P32LA13LGNN
2158068	ET08SCF	3 TZ-SS	P32LA13LSNN
2170010	ET08SOMD71	3 TZ-T	P32LA13LSNN
2170010	ET08SOMDCF	3 VTX-B	P32LA14LGNN
2170020	ET08SREDCF	3 WLN-S	P32LA14LGNN
2170020	ET08SREDOMDCF	3 WLZ-SS	P32LA14LSNN
2170030	ET08SVITOMDCF	3/4 CD45-S	P32LA14LSNN
2170030	ET08ZL71	3/4 CD-S	P32MA14024N
2170040	ET08ZLCF	3/4 CD-SS	P32MA14024N
2170040	ET08ZLMED71	3/4 CR-S	P32MA94024N
2170110	ET08ZLMEDCF	3/4 DD45-S	P32MA94024N
2170110	ET08ZLRED71	3/4 DD-S	P32MD12022N
2170150	ET08ZLREDCF	3/4 FF-S	P32MD12022N
2170150	ET08ZLVITCF	3/4 FG-S	P32PA14AD2VD1A
2170165	ET08ZS71	3/4 GG-S	P32PA14AD2VD1A
2170165	ET08ZSCF	3/4 GG-SS	P32PA14AD2VM1A
2172010	ET08ZSREDCF	3/4 HHP-S	P32PA14AD2VM1A
2172010	ET10L71	3/4 HHP-SS	P32PA14AD2VP1A
2172020	ET10LCF	3/4 HP-S	P32PA14AD2VP1A
2172020	ET10LCRCF	3/4 KMMOO-S	P32PA14AZ2VP1A
2172040	ET10LDPR71CF	3/4 KMMOO-SS	P32PA14AZ2VP1A
2172040	ET10LEPDMOMD71	3/4 MMO-S	P32PA14ED2VP1A
2187065	ET10LMEDCF	3/4 MMO-SS	P32PA14ED2VP1A

2187065	ET10LOMD71	3/4 MMS-S	P32PA94BD2VP1A
2187165	ET10LOMDCF	3/4 MRO-S	P32PA94BD2VP1A
2187165	ET10LRED71	3/4 RRS-S	P32RA12BNGP
2187230	ET10LREDCF	3/4 X 1/2 CD-S	P32RA12BNGP
2187230	ET10LREDOMD71	3/4 X 1/2 CD-SS	P32RA12BNHP
2187426	ET10LREDOMDCF	3/4 X 1/2 CR-S	P32RA12BNHP
2187426	ET10LREDVITCF	3/4 X 1/2 CR-SS	P32RA12BNJP
2189001	ET10LVITCF	3/4 X 1/2 FF-S	P32RA12BNJP
2189001	ET10LVITOMDCF	3/4 X 1/2 FG-S	P32RA12BNLP
2189004	ET10S71	3/4 X 1/2 GG-S	P32RA12BNLP
2189004	ET10SCF	3/4 X 1/2 PTR-B	P32RA12BNMP
2189007	ET10SMEDCF	3/4 X 1/2 PTR-S	P32RA12BNMP
2189007	ET10SOMD71	3/4 X 1/2 PTR-S PLCP PLUG	P32RA12BNNP
2189010	ET10SOMDCF	3/4 X 1/4 FF-S	P32RA12BNNP
2189010	ET10SREDCF	3/4 X 1/4 FG-S	P32RA12BNYP
2189013	ET10SVITCF	3/4 X 1/4 PTR-S	P32RA12BNYP
2189013	ET10SVITOMDCF	3/4 X 3/8 PTR-B	P32RA12BNZP
2189016	ET10ZL71	3/4 X 3/8 PTR-S	P32RA12BNZP
2189016	ET10ZLCF	3/4-12 FHG5-S	P32RA13BNHP
2207006	ET10ZLMEDCF	3/4-12F4OHG5S	P32RA13BNHP
2207006	ET10ZLRED71	3/4BSPBUWS	P32RA13BNJP
2207011	ET10ZLREDCF	3/4BSPBUWSS	P32RA13BNJP
2207011	ET10ZLVITCF	3/4CD43BL	P32RA13BNLP
2207016	ET10ZS71	3/4CR33BL	P32RA13BNLP
2207016	ET10ZSCF	3/4DD44BL	P32RA13BNMP
2207021	ET10ZSREDCF	3/4FF33B	P32RA13BNMP
2207021	ET12L71	3/4FF33BL	P32RA13BNNP
2207028	ET12LCF	3/4FF33MS	P32RA13BNNP
2207028	ET12LMEDCF	3/4FF33MSS	P32RA13BNYP
2207031	ET12LMEDOMDCF	3/4FF633BL	P32RA13BNYP
2207031	ET12LOMD71	3/4FFMS	P32RA13BNZP
2207041	ET12LOMDCF	3/4FFMSS	P32RA13BNZP
2207041	ET12LRED71	3/4GG44B	P32RA13NNHP
2207064	ET12LREDCF	3/4GG44BL	P32RA13NNHP
2207064	ET12LREDOMDCF	3/4GG44MS	P32RA13NNNP
2207065	ET12LVITOMDCF	3/4GG44MSS	P32RA13NNNP
2207065	ET12S71	3/4HP3B	P32RA14BNGP
2207111	ET12SCF	3/4HP3MS	P32RA14BNGP
2207111	ET12SMEDOMDCF	3/4HP3MSS	P32RA14BNHP
2207116	ET12SNBROMD71	3/4HPMSS	P32RA14BNHP
2207116	ET12SOMD71	3/4L4NMS	P32RA14BNJP
2207121	ET12SOMDCF	3/4L4NMSS	P32RA14BNJP
2207121	ET12SRED71	3/4MMO444B	P32RA14BNLP
2207127	ET12SREDCF	3/4MMO444BL	P32RA14BNLP
2207127	ET12SREDOMDCF	3/4MMO444MS	P32RA14BNMP
2207128	ET12SVITCF	3/4MMS443BL	P32RA14BNMP
2207128	ET12SVITOMDCF	3/4MRO434BL	P32RA14BNNP
2207131	ET12ZL71	3/4MRS433BL	P32RA14BNNP
2207131	ET12ZLCF	3/4P40NBL	P32RA14BNYP
2207136	ET12ZLRED71	3/4RRP	P32RA14BNYP
2207136	ET12ZLREDCF	3/4RRS333BL	P32RA14BNZP
2207141	ET12ZLVITCF	3/4WGG44B	P32RA14BNZP
2207141	ET12ZS71	3/4X1/2FF33MS	P32RA93BNGP

2207158	ET12ZSCF	3/4X1/2FF33MSS	P32RA93BNGP
2207158	ET12ZSREDCF	3/4X1/2FFMSS	P32SA14PPN
2207166	ET12ZSVITCF	3/4X1/2FG43B	P32SA14PPN
2207166	ET13/04DP	3/4X1/2FG43BL	P32SA14SCN0000
2207211	ET13/04DX	3/4X1/2FGMSS	P32SA14SCN0000
2207211	ET13/04DXS	3/4X1/2GG44BL	P32SA14SCNA2CN
2207216	ET13/04FX	3/4X1/2GG44MS	P32SA14SCNA2CN
2207216	ET13/04FXS	3/4X1/2GGMSS	P32SA14Y0N
2207221	ET13/06DX	3/4X1/2PTR34B	P32SA14Y0N
2207221	ET13/06DXS	3/4X1/2PTR34BL	P32TA14PPN
2207228	ET13/06FX	3/4X1/2PTR34MS	P32TA14PPN
2207228	ET13/06FXS	3/4X1/2PTR34MSS	P32TA14SCN0000
2207231	ET14S71	3/4X1/2PTR44BL	P32TA14SCN0000
2207231	ET14SCF	3/4X1/2PTR44MSS	P32TA14SCNA2CN
2207234	ET14SMEDCF	3/4X1/2PTRMS	P32TA14SCNA2CN
2207234	ET14SOMD71	3/4X1/2PTRMSS	P32TA14SCND2CN
2207236	ET14SOMDCF	3/4X1/4 GG-SS	P32TA14SCND2CN
2207236	ET14ZS71	3/4X1/4GGMSS	P32VA12LSAN
2207239	ET14ZSCF	3/4X1/4PTR34MS	P32VA12LSAN
2207239	ET15L71	3/4X1/4PTR34MSS	P32VA12LSBN
2207241	ET15LCF	3/4X1/4PTR44MSS	P32VA12LSBN
2207241	ET15LDPR71CF	3/4X1/4PTRMSS	P32VA13LBNN
2207246	ET15LMEDCF	3/4X16 UNF-2B	P32VA13LBNN
2207246	ET15LMEDOMDCF	3/4X1FF33BL	P32VA13LSAN
2207251	ET15LOMD71	3/4X1GG44BL	P32VA13LSAN
2207251	ET15LOMDCF	3/4X3/4F3HGS	P32VA13LSBN
2207262	ET15LRED71	3/4X3/4F4OHGS	P32VA13LSBN
2207262	ET15LREDCF	3/4X3/8FFMS	P32VA14LBNN
2207268	ET15LREDDPR71CF	3/4X3/8PTR34B	P32VA14LBNN
2207268	ET15LREDOMD71	3/4X3/8PTR34BL	P32VA14LSAN
2207316	ET15LREDOMDCF	3/4X3/8PTR44BL	P32VA14LSAN
2207316	ET15LREDVITOMDCF	3/4X3/8PTR44MS	P32VA14LSBN
2207321	ET15LVITOMDCF	3/4X3/8PTRMSS	P32VA14LSBN
2207321	ET15LVITOMDVOLCF	3/8 CD45-S	P32YA12GEANGLNW
2207331	ET15ZL71	3/8 CD-S	P32YA12GEANGLNW
2207331	ET15ZLCF	3/8 CD-SS	P32YA12GEMNGLNW
2207334	ET15ZLREDCF	3/8 CR-S	P32YA12GEMNGLNW
2207334	ET15ZLVITCF	3/8 CR-SS	P32YA12SEANGLNW
2207346	ET16S71	3/8 DD45-S	P32YA12SEANGLNW
2207346	ET16SCF	3/8 DD-S	P32YA12SEMNGLNW
2207434	ET16SMEDOMDCF	3/8 DD-SS	P32YA12SEMNGLNW
2207434	ET16SOMD71	3/8 FF-B	P32YA13GEANGLNW
2207441	ET16SOMDCF	3/8 FF-S	P32YA13GEANGLNW
2207441	ET16SRED71	3/8 FG-S	P32YA13GEMNGLNW
2207456	ET16SREDCF	3/8 FG-SS	P32YA13GEMNGLNW
2207456	ET16SREDOMDCF	3/8 GG-S	P32YA13SEANGLNW
2207465	ET16SVITCF	3/8 GG-SS	P32YA13SEANGLNW
2207465	ET16SVITOMDCF	3/8 HHP-S	P32YA13SEMNGLNW
2207521	ET16ZS71	3/8 HHP-SS	P32YA13SEMNGLNW
2207521	ET16ZSCF	3/8 HP-B	P32YA14GEANGLNW
2207531	ET16ZSRED71	3/8 HP-S	P32YA14GEANGLNW
2207531	ET16ZSREDCF	3/8 KMMOO-S	P32YA14GEMNGLNW
2207551	ET18L71	3/8 MMO-S	P32YA14GEMNGLNW

2207551	ET18LCF	3/8 MMO-SS	P32YA14SEANGLNW
2207565	ET18LDPR71CF	3/8 MMS-S	P32YA14SEANGLNW
2207565	ET18LMEDCF	3/8 MRO-S	P32YA14SEMNGLNW
2207566	ET18LOMD71	3/8 RRS-S	P32YA14SEMNGLNW
2207566	ET18LOMDCF	3/8 X 1/2 CD-S	P32YN12GEANGW
2209001	ET18LRED71	3/8 X 1/4 CD-S	P32YN12GEANGW
2209001	ET18LREDCF	3/8 X 1/4 CR-S	P32YN12GEMNGW
2209004	ET18LREDDPR71CF	3/8 X 1/4 FF-S	P32YN12GEMNGW
2209004	ET18LREDOMDCF	3/8 X 1/4 FG-B	P32YN12SEANGW
2209007	ET18LVITCF	3/8 X 1/4 FG-S	P32YN12SEANGW
2209007	ET18LVITOMDCF	3/8 X 1/4 GG-S	P32YN12SEMNGW
2209010	ET18ZL71	3/8 X 1/4 PTR-B	P32YN12SEMNGW
2209010	ET18ZLCF	3/8 X 1/4 PTR-S	P32YN13GEANGW
2209013	ET18ZLREDCF	3/8 X 1/8 FF-S	P32YN13GEANGW
2209013	ET18ZLREDVITCF	3/8 X 1/8 FG-S	P32YN13GEMNGW
2209016	ET20S71	3/8 X 1/8 FG-SS	P32YN13GEMNGW
2209016	ET20SCF	3/8 X 1/8 GG-S	P32YN13SEANGW
2209023	ET20SOMD71	3/8 X 1/8 GG-SS	P32YN13SEANGW
2209023	ET20SOMDCF	3/8 X 1/8 PTR-B	P32YN13SEMNGW
2217016	ET20SRED71	3/8 X 1/8 PTR-S	P32YN13SEMNGW
2217016	ET20SREDCF	3/8-6F4OHG5MS	P32YN14GEANGW
2217028	ET20SREDOMD71	3/8-6F4OHG5S	P32YN14GEANGW
2217028	ET20SREDOMDCF	3/8-8 FHG5-S	P32YN14GEMNGW
2217036	ET20SVITCF	3/8-8F4OHG5S	P32YN14GEMNGW
2217036	ET20SVITOMDCF	3/8BSPBUWS	P32YN14SEANGW
2217121	ET20ZS71	3/8BSPBUWSS	P32YN14SEANGW
2217121	ET20ZSCF	3/8CD43B	P32YN14SEMNGW
2217131	ET20ZSR-ED71	3/8CD43BL	P32YN14SEMNGW
2217131	ET20ZSREDCF	3/8CDMS	P33CA14GEANGLNW
2217158	ET20ZSVITCF	3/8CR33BL	P33CA14GEANGLNW
2217158	ET22L71	3/8DD44B	P33CA14GEMNGLNW
2217227	ET22LCF	3/8DD44BL	P33CA14GEMNGLNW
2217227	ET22LDPR71CF	3/8F4UF4UB	P33CA14SEANGLNW
2217236	ET22LMEDCF	3/8F4UG4B-20	P33CA14SEANGLNW
2217236	ET22LMEDOMDCF	3/8FF33B	P33CA14SEMNGLNW
2217251	ET22LOMD71	3/8FF33BL	P33CA14SEMNGLNW
2217251	ET22LOMDCF	3/8FF33MS	P33CA16GEANGLNW
2217321	ET22LRED71	3/8FF33MSS	P33CA16GEANGLNW
2217321	ET22LREDCF	3/8FF44BL	P33CA16GEMNGLNW
2217328	ET22LREDOMDCF	3/8FF633BL	P33CA16GEMNGLNW
2217328	ET22LVITCF	3/8FFMSS	P33CA16SEANGLNW
2217336	ET22LVITOMDCF	3/8FG43BL	P33CA16SEANGLNW
2217336	ET22ZL71	3/8FG44BL	P33CA16SEMNGLNW
2217341	ET22ZLCF	3/8FHG4-B	P33CA16SEMNGLNW
2217341	ET22ZLREDCF	3/8FN4BL	P33CB14GEANGLNW
2217346	ET22ZLVITCF	3/8GG44B	P33CB14GEANGLNW
2217346	ET25S71	3/8GG44BL	P33CB14GEMNGLNW
2217351	ET25SCF	3/8GG44MS	P33CB14GEMNGLNW
2217351	ET25SOMD71	3/8GG44MSS	P33CB14SEANGLNW
2217353	ET25SOMDCF	3/8HHP3B	P33CB14SEANGLNW
2217353	ET25SREDCF	3/8HHP3BL	P33CB14SEMNGLNW
2217431	ET25SVITCF	3/8HP3B	P33CB14SEMNGLNW
2217431	ET25SVITOMDCF	3/8HP3MS	P33CB16GEANGLNW

2217446	ET25ZS71	3/8HP3MSS	P33CB16GEANGLNW
2217446	ET25ZSCF	3/8HPMSS	P33CB16GEMNGLNW
2217456	ET25ZSREDCF	3/8KMMOO4BL	P33CB16GEMNGLNW
2217456	ET28L71	3/8KMRO4434BL	P33CB16SEANGLNW
2237016	ET28LCF	3/8L4NMS	P33CB16SEANGLNW
2237016	ET28LDPR71CF	3/8L4NMSS	P33CB16SEMNGLNW
2237021	ET28LOMD71	3/8MMO444B	P33CB16SEMNGLNW
2237021	ET28LOMDCF	3/8MMO444BL	P33EA14EGABNGP
2237028	ET28LRED71	3/8MMO444MS	P33EA14EGABNGP
2237028	ET28LREDCF	3/8MMO444MSS	P33EA14EGABNLP
2237031	ET28LREDOMDCF	3/8MMS443BL	P33EA14EGABNLP
2237031	ET28LREDVITCF	3/8MRO434B	P33EA14EGABNMP
2237034	ET28LVITCF	3/8MRO434BL	P33EA14EGABNMP
2237034	ET28LVITOMDCF	3/8MRS433BL	P33EA14EGABNNP
2237041	ET28ZL71	3/8P40NBL	P33EA14EGABNNP
2237041	ET28ZLCF	3/8P4UNBL	P33EA14EGABNYP
2237111	ET28ZLREDCF	3/8RRD	P33EA14EGABNYP
2237111	ET28ZLVITCF	3/8RRP	P33EA14EGABNZP
2237121	ET30S71	3/8RRS333BL	P33EA14EGABNZP
2237121	ET30SCF	3/8WGG44B	P33EA14EGMBNGP
2237228	ET30SMEDCF	3/8WGG44BL	P33EA14EGMBNGP
2237228	ET30SOMD71	3/8X1/2FF33B	P33EA14EGMBNLP
2237328	ET30SOMDCF	3/8X1/2FF33BL	P33EA14EGMBNLP
2237328	ET30SRED71	3/8X1/2FF44BL	P33EA14EGMBNMP
2237341	ET30SREDCF	3/8X1/2GG44BL	P33EA14EGMBNMP
2237341	ET30SREDOMDCF	3/8X1/4FF33MS	P33EA14EGMBNNP
2237351	ET30SVITOMDCF	3/8X1/4FF33MSS	P33EA14EGMBNNP
2237351	ET30ZS71	3/8X1/4FFMSS	P33EA14EGMBNYP
2256998	ET30ZSCF	3/8X1/4FG43B	P33EA14EGMBNYP
2256998	ET32R05	3/8X1/4FG43BL	P33EA14EGMBNZP
8207-1/2	ET35L71	3/8X1/4FG44BL	P33EA14EGMBNZP
8207-1/4	ET35LCF	3/8X1/4FGMSS	P33EA14ESABNGP
8207-1/8	ET35LOMD71	3/8X1/4FHG4S	P33EA14ESABNGP
8207-3/4	ET35LOMDCF	3/8X1/4GG44MS	P33EA14ESABNHP
8207-3/8	ET35LRED71	3/8X1/4PTR34B	P33EA14ESABNHP
2550050	ET35LREDCF	3/8X1/4PTR34BL	P33EA14ESABNJP
2550050	ET35LREDOMDCF	3/8X1/4PTR34MS	P33EA14ESABNJP
2550057	ET35LVITOMDCF	3/8X1/4PTR34MSS	P33EA14ESABNLP
2550057	ET35ZL71	3/8X1/4PTR44BL	P33EA14ESABNLP
2552301	ET35ZLCF	3/8X1/4PTR44HBL	P33EA14ESABNMP
2552301	ET35ZLRED71	3/8X1/4PTR44MSS	P33EA14ESABNMP
3003700	ET35ZLREDCF	3/8X1/4PTRMSS	P33EA14ESABNNP
3003700	ET38S71	3/8X1/4PTR-S	P33EA14ESABNNP
3014000	ET38SCF	3/8X1/4PTR-S	P33EA14ESABNYP
3014000	ET38SOMD71	3/8X1/8FFMSS	P33EA14ESABNYP
3014700	ET38SOMDCF	3/8X1/8FG43BL	P33EA14ESABNZP
3014700	ET38SRED71	3/8X1/8FG44BL	P33EA14ESABNZP
3016000	ET38SREDCF	3/8X1/8PTR34B	P33EA14ESMBNGP
3016000	ET38SVITOMDCF	3/8X1/8PTR34BL	P33EA14ESMBNGP
3016800	ET38ZS71	3/8X1/8PTR44BL	P33EA14ESMBNHP
3016800	ET38ZSCF	3/8X1/8PTRMSS	P33EA14ESMBNHP
3041100	ET38ZSREDCF	3/8X24 UNF-2B	P33EA14ESMBNJP
3041100	ET42L71	3/8X3/8F3HGS	P33EA14ESMBNJP

3043400	ET42LCF	3/8X3/8F4OHGS	P33EA14ESMBNLP
3043400	ET42LOMD71	3/8X3/8FHG4S	P33EA14ESMBNLP
3045300	ET42LOMDCF	3/8YMMM444BL	P33EA14ESMBNMP
3045300	ET42LREDCF	3/8YMMS443BL	P33EA14ESMBNMP
3046100	ET42LREDOMDCF	3000 04 00	P33EA14ESMBNNP
3046100	ET42LVITOMDCF	3000 06 00	P33EA14ESMBNNP
3046200	ET42ZL71	3000 08 00	P33EA14ESMBNYP
3046200	ET42ZLCF	3000 10 00	P33EA14ESMBNYP
3046300	ET42ZLMEDCF	3000 12 00	P33EA14ESMBNZP
3046300	ET42ZLREDCF	3000 14 00	P33EA14ESMBNZP
3046500	ET42ZLVITCF	3000 70 00	P33EA16EGABNGP
3046500	ET50E02-DGP	3000 70 04	P33EA16EGABNGP
3047300	ET50E06	3000 71 00	P33EA16EGABNLP
3047300	ET50M01	3000 71 00 05	P33EA16EGABNLP
3047900	ET50M02	3000 71 11	P33EA16EGABNMP
3047900	ET50RCA	3000 71 11 05	P33EA16EGABNMP
3068800	ET80E16	3000-32-00042-0000-000000	P33EA16EGABNNP
3068800	ET80R05	3000-32-00042-0000-000000	P33EA16EGABNNP
3096100	ET99-104	3000-32-00100-0000-000000	P33EA16EGABNYP
3096100	ETB100M05LA77DF330A	3000-32-00100-0000-000000	P33EA16EGABNYP
3098200	ETB100M05LA77DM200A	3000-32-00120-0000-000000	P33EA16EGABNZP
3098200	ETB100M05LAJ5DSA180A	3000-32-00120-0000-000000	P33EA16EGABNZP
3098400	ETB100M05LAJ6DSA200A	3000-32-00200-0000-000000	P33EA16EGMBNGP
3098400	ETB100M05PA87CSB100A	3000-32-00200-0000-000000	P33EA16EGMBNGP
3098500	ETB100M05PA87FMA50A	3000-32-00200-0100-000000	P33EA16EGMBNLP
3098500	ETB100M05PAJ6CSB100A	3000-32-00200-0100-000000	P33EA16EGMBNLP
3171818	ETB100M05QA87FC600IP	3000-32-00230-0000-000000	P33EA16EGMBNMP
003371000	ETB100M05QA87FC620IP	3000-32-00230-0000-000000	P33EA16EGMBNMP
003371000	ETB100M10LA77FMA250A	3000-32-00240-0000-000000	P33EA16EGMBNNP
003371001	ETB100M10LA77FMA250AEUNQ	3000-32-00240-0000-000000	P33EA16EGMBNNP
003371001	ETB100M10LA87FMA1050A	3000-32-00250-0000-000000	P33EA16EGMBNYP
003371002	ETB100M10LA87GM150A	3000-32-00250-0000-000000	P33EA16EGMBNYP
003371002	ETB100M10LA90FMA750AEUHX	3000-32-00250-3000-000072	P33EA16EGMBNZP
003371003	ETB100M10LAP4FFA550A	3000-32-00250-3000-000072	P33EA16EGMBNZP
003371003	ETB100M10LAP5DF1000A	3000-32-00300-0000-000000	P33EA16ESABNGP
003371004	ETB100M10LAP5DM1150A	3000-32-00300-0000-000000	P33EA16ESABNGP
003371004	ETB100M10MA87FXB600AEUBV	3000-32-00320-0000-000000	P33EA16ESABNHP
003381104	ETB100M10PA77EMA250A	3000-32-00320-0000-000000	P33EA16ESABNHP
003381104	ETB100M10PA77EMA450A	3000-32-00330-0000-000000	P33EA16ESABNJP
003393003	ETB100M10PA77FM200AEUGD	3000-32-00330-0000-000000	P33EA16ESABNJP
003393003	ETB100M10PA87CCA230A	3000-32-00350-0000-000000	P33EA16ESABNLP
003393004	ETB100M10PA87DXC280IPEUY1	3000-32-00350-0000-000000	P33EA16ESABNLP
003393004	ETB100M10PA87EMA250A	3000-32-00400-0000-000000	P33EA16ESABNMP
3505000	ETB100M10PA87EMA450A	3000-32-00400-0000-000000	P33EA16ESABNMP
3505000	ETB100M10PA87FFA330A	3000-32-00420-0000-000000	P33EA16ESABNNP
3505100	ETB100M10PA87FFC100A	3000-32-00420-0000-000000	P33EA16ESABNNP
3505100	ETB100M10PA87FFC150A	3000-32-00465-0000-000000	P33EA16ESABNYP
3505200	ETB100M10PA87FMA250A	3000-32-00465-0000-000000	P33EA16ESABNYP
3505200	ETB100M10PA87FMA300A	3000-32-00480-0000-000000	P33EA16ESABNZP
3505300	ETB100M10PA87FMA450A	3000-32-00480-0000-000000	P33EA16ESABNZP
3505300	ETB100M10PA87FMA600A	3000-32-00500-0000-000000	P33EA16ESMBNGP
3505400	ETB100M10PA87FMA600AEUOU	3000-32-00500-0000-000000	P33EA16ESMBNGP
3505400	ETB100M10PA87JSB600A	3000-32-00530-0000-000000	P33EA16ESMBNHP

3505500	ETB100M10PA90FMA150AEUHQ	3000-32-00530-0000-000000	P33EA16ESMBNHP
3505500	ETB100M10PA90FMA350AEUJY	3000-32-00550-0000-000000	P33EA16ESMBNJP
3505600	ETB100M10PAB4FMA300IPEUCW	3000-32-00550-0000-000000	P33EA16ESMBNJP
3505600	ETB100M10PAB5FMA200AEUNN	3000-32-00575-0000-000000	P33EA16ESMBNLP
3505700	ETB100M10PAJ5FRB300A	3000-32-00575-0000-000000	P33EA16ESMBNLP
3505700	ETB100M10PAJ6GMA250A	3000-32-00600-0000-000000	P33EA16ESMBNMP
3505800	ETB100M10PAP5FFC150A	3000-32-00600-0000-000000	P33EA16ESMBNMP
3505800	ETB100M10PX90FMA150IPEUFU	3000-32-00620-0000-000000	P33EA16ESMBNNP
3505900	ETB100M10RA87FM320AEUFE	3000-32-00620-0000-000000	P33EA16ESMBNNP
3505900	ETB100M20PA87CCA150A	3000-32-00650-0000-000000	P33EA16ESMBNYP
3506000	ETB100M40PA87FMA400A	3000-32-00650-0000-000000	P33EA16ESMBNYP
3506000	ETB100M40QA87FM600AEUF2	3000-32-00670-0000-000000	P33EA16ESMBNZP
3506100	ETB125M10LA87FM100A	3000-32-00670-0000-000000	P33EA16ESMBNZP
3506100	ETB125M10LAB5GM300A	3000-32-00700-0000-000000	P33FA14AGMN
3506300	ETB125M10LAJ7FMC750A	3000-32-00700-0000-000000	P33FA14AGMN
3506300	ETB125M10LAJ7FMC750AEUOC	3000-32-00700-1000-000000	P33FA14ASMN
3508550	ETB125M10LAP5FM240A	3000-32-00700-1000-000000	P33FA14ASMN
3508550	ETB125M10PA87FMA250A	3000-32-00825-0000-000000	P33FA14DGAN
3508560	ETB125M10PA87JMA200A	3000-32-00825-0000-000000	P33FA14DGAN
3508560	ETB125M10PAB5FMA150A	3000-32-00826-0000-000000	P33FA14DGMN
3508570	ETB125M10PAJ6JMA200A	3000-32-00826-0000-000000	P33FA14DGMN
3508570	ETB125M10PAJ7FMA100A	3000-32-00840-0000-000000	P33FA14DSAN
3508580	ETB125M10PAJ7FMA100AEUOB	3000-32-00840-0000-000000	P33FA14DSAN
3508580	ETB125M10PAJ7FMA120AEUIQ	3000-32-00840-0001-000000	P33FA14DSMN
3508590	ETB125M10PAJ7GMA250A	3000-32-00840-0001-000000	P33FA14DSMN
3508590	ETB125M20LAJ7FMA1080A	3000-32-00920-1000-000000	P33FA14EGAN
3520200	ETB32M05LA20FM400A	3000-32-00920-1000-000000	P33FA14EGAN
3520200	ETB32M05LA20GCA50A	3000-32-01070-0000-000000	P33FA14EGMN
3523200	ETB32M05LA47FM120A	3000-32-01070-0000-000000	P33FA14EGMN
3523200	ETB32M05LA47FM130A	3000-32-01070-2000-000000	P33FA14ESAN
3525800	ETB32M05LA47FM200A	3000-32-01070-2000-000000	P33FA14ESAN
3525800	ETB32M05LA47FM270AEUJH	3000-32-01100-0000-000000	P33FA14ESMN
3525900	ETB32M05LA47FM50A	3000-32-01100-0000-000000	P33FA14ESMN
3525900	ETB32M05LA47FMA100A	3000-32-01190-0000-000000	P33FA14QGAN
3527000	ETB32M05LA47FMA130A	3000-32-01190-0000-000000	P33FA14QGAN
3527000	ETB32M05LA47FMA50A	3000-32-01300-0000-000000	P33FA14QGMN
3527100	ETB32M05LA47FR80A	3000-32-01300-0000-000000	P33FA14QGMN
3527100	ETB32M05NA47FMA250A	3000-32-01320-0000-000000	P33FA14QSAN
3532200	ETB32M05PA47CCA100A	3000-32-01320-0000-000000	P33FA14QSAN
3532200	ETB32M05PA47CCA200A	3000-32-01350-0000-000000	P33FA14QSMN
3540000	ETB32M05PA47CCA525A	3000-32-01350-0000-000000	P33FA14QSMN
3540000	ETB32M05PA47CCA60A	3000-32-01500-0000-000000	P33FA16AGMN
3546700	ETB32M05PA47CMA100A	3000-32-01500-0000-000000	P33FA16AGMN
3546700	ETB32M05PA47ECA100A	3000-32-01550-0000-000000	P33FA16ASMN
3550900	ETB32M05PA47ECB350A	3000-32-01550-0000-000000	P33FA16ASMN
3550900	ETB32M05PA47FMA100A	3000-32-01650-0000-000000	P33FA16DGAN
03621116	ETB32M05PA47FMA150A	3000-32-01650-0000-000000	P33FA16DGAN
3700237	ETB32M05PA47FMA170A	3000-32-01720-0000-000000	P33FA16DGMN
3700315	ETB32M05PA47FMA255A	3000-32-01720-0000-000000	P33FA16DGMN
3700520	ETB32M05PA47FMA300A	3000-32-01800-0000-000000	P33FA16DSAN
3700606	ETB32M05PA47FMA550A	3000-32-01800-0000-000000	P33FA16DSAN
3700905	ETB32M05PA47FMA70A	3000-32-02000-0000-000000	P33FA16DSMN
3700954	ETB32M05PA47FMB100A	3000-32-02000-0000-000000	P33FA16DSMN

3700973	ETB32M05PA47FMB120A	3000-32-02280-0000-000000	P33FA16EGAN
3700981	ETB32M05PA47FMB300A	3000-32-02280-0000-000000	P33FA16EGAN
3701097	ETB32M05PA47FMB420A	3000-32-02355-0000-000000	P33FA16EGMN
3701895	ETB32M05PA47FMB550A	3000-32-02355-0000-000000	P33FA16EGMN
3701897	ETB32M05PA47FRB255A	3000-32-02420-0000-000000	P33FA16ESAN
3702342	ETB32M05PA90CSA50AEULS	3000-32-02420-0000-000000	P33FA16ESAN
3702356	ETB32M05PA90FMA100AEUGC	3000-32-03050-0000-000000	P33FA16ESMN
3702390	ETB32M05QA47JMA100A	3000-32-03050-0000-000000	P33FA16ESMN
3702392	ETB32M05QA90JMA100AEUGC	3000-32-03250-0000-000000	P33FA16QGAN
3702789	ETB32M05QA90JMA100AEULU	3000-32-03250-0000-000000	P33FA16QGAN
3702796	ETB32M10LA47FF200A	3000-32-03830-0000-000000	P33FA16QGMN
3702800	ETB32M10LA47FMA100A	3000-32-03830-0000-000000	P33FA16QGMN
3702958	ETB32M10LA47GMA200A	300105P0002	P33FA16QSAN
3702959	ETB32M10LA90FR200A	300382P0001	P33FA16QSAN
3703007	ETB32M10NA47FMA250A	300393P0007	P33FA16QSMN
3703010	ETB32M10PA47CCA600A	300480P0001	P33FA16QSMN
3703025	ETB32M10PA47CCA750A	3005-03300	P33KA00BGM
3703439	ETB32M10PA47FMA100A	3005-03300	P33KA00BGM
3703440	ETB32M10PA47FMA130A	3005-2	P33KA00BGN
3703441	ETB32M10PA47FMA150A	3005-3	P33KA00BGN
3703466	ETB32M10PA47FMA180A	300674P0013	P33KA00BSA
3703467	ETB32M10PA47FMA200A	300674P0025	P33KA00BSA
3703516	ETB32M10PA47FMA240A	300674P0040	P33KA00BSM
3703517	ETB32M10PA47FMA250A	30078FIL	P33KA00BSM
3703518	ETB32M10PA47FMA255A	30078FIL	P33KA00BSN
3703519	ETB32M10PA47FMA300A	30085-0245	P33KA00BSN
3703520	ETB32M10PA47FMA400A	30085-0245	P33KA00ES9
3703524	ETB32M10PA47FMA450A	30085-0310	P33KA00ES9
3703589	ETB32M10PA47FMA550A	30085-0310	P33KA00ESA
3703591	ETB32M10PA47FMB145A	30085-0330	P33KA00ESA
3703603	ETB32M10PA47FRB255A	30085-0330	P33KA00ESC
3703604	ETB32M10PA47FRB300A	30085-0375	P33KA00ESC
3703605	ETB32M10PA47GMA260A	30085-0375	P33KA00ESE
3703606	ETB32M10PA47JM300A	30085-0575	P33KA00ESE
3703646	ETB32M10PA90FMA150AEUBS	30085-0575	P33KA00ESG
3703648	ETB32M10PA90FMA200AEUGC	3009-2	P33KA00ESG
3703651	ETB32M10PA90FMA250AEUGC	3009-3	P33KA00ML
3703652	ETB32M10PA90FMA300AEUGC	300956P0016	P33KA00ML
3703653	ETB32M10PA90FMC400AEUGC	301000K097	P33KA00MM
3703665	ETB32M10QA47FMA240AEUCW	301000K801	P33KA00MM
3703666	ETB50M05LA57DC450IP	301000K802	P33KA00MP
3703667	ETB50M05LA57DM230A	301000K803	P33KA00MP
3703901	ETB50M05LA57DM250A	301000K806	P33KA00MR
3703905	ETB50M05LA57DSA350A	301000K836	P33KA00MR
3703977	ETB50M05LA57DSA450A	301000K837	P33KA00RB
3704073	ETB50M05LA57DSA500A	301000K842	P33KA00RB
3704077	ETB50M05LA57FF120A	301000K843	P33KA00RC
3704079	ETB50M05LA57FF120AEUHV	301000K850	P33KA00RC
3704080	ETB50M05LA57FF50IP	301000K851	P33LA14LGNN
3704105	ETB50M05LA57FM100A	301000K857	P33LA14LGNN
3704513	ETB50M05LA57FM130A	301000K858	P33LA14LSNN
3704520	ETB50M05LA57FM50A	301000K863	P33LA14LSNN
3704530	ETB50M05LA57FMA100A	301000K864	P33LA16LGNN

3704540	ETB50M05LA57FMA130A	301000K865	P33LA16LGNN
3704587	ETB50M05LA57FMA50A	301000S143	P33LA16LSNN
3704588	ETB50M05LA57FR100A	301000S144	P33LA16LSNN
3704590	ETB50M05LA57FRB450A	301000S152	P33MA16024N
3704628	ETB50M05LA67DCA700A	301000S166	P33MA16024N
3704631	ETB50M05LA67DS200A	301000S174	P33RA14BNGP
3704634	ETB50M05LA67DS600A	301000S217	P33RA14BNGP
3704649	ETB50M05LA67DSA170A	301000S232	P33RA14BNHP
3704658	ETB50M05LA67FM100A	301000S233	P33RA14BNHP
3704794	ETB50M05LA90FMA100AEUFJ	301000S234	P33RA14BNJP
3704867	ETB50M05LA90FMA250AEUMW	301000S235	P33RA14BNJP
3704887	ETB50M05LAN6FM300A	301000S240	P33RA14BNLP
3704888	ETB50M05MA67CM235A	301000S263	P33RA14BNLP
3704905	ETB50M05MA90CM65AEUCA	301000S272	P33RA14BNMP
3704907	ETB50M05NA57DSA400IP	301000S275	P33RA14BNMP
3704909	ETB50M05NA67FMA300A	301000S277	P33RA14BNNP
3704911	ETB50M05PA57CCB300A	301003P0001	P33RA14BNNP
3704912	ETB50M05PA57FFB115A	301004P0001	P33RA14BNYP
3704913	ETB50M05PA57FMA180A	301005R0001	P33RA14BNYP
3704966	ETB50M05PA57FMA200A	301005R0002	P33RA14BNZP
3705049	ETB50M05PA57FMA220A	301009P0001	P33RA14BNZP
3705082	ETB50M05PA57FMA240A	301013R0001	P33RA16BNGP
3705177	ETB50M05PA57FMA260A	301013R0004	P33RA16BNGP
3705220	ETB50M05PA57FMA400A	301013R0008	P33RA16BNHP
3705294	ETB50M05PA57FMA430A	301013R0011	P33RA16BNHP
3705361	ETB50M05PA57FMA450A	301014P0001	P33RA16BNJP
3705743	ETB50M05PA57FMA550A	3010-1678	P33RA16BNJP
3705756	ETB50M05PA57FMA750A	3010-2	P33RA16BNLP
3705824	ETB50M05PA57FMB180A	301026P0001	P33RA16BNLP
3705896	ETB50M05PA57FMB250A	301029P0001	P33RA16BNMP
3705899	ETB50M05PA57FMC100A	3010-3	P33RA16BNMP
3706030	ETB50M05PA57FSA100A	301039R0002	P33RA16BNNP
3706051	ETB50M05PA57GMA160A	3010-3P	P33RA16BNNP
3706210	ETB50M05PA67CSA80A	301059P0002	P33RA16BNYP
3706330	ETB50M05PA67DFB180A	30106-0170	P33RA16BNYP
3706393	ETB50M05PA67DSA270A	30106-0170	P33RA16BNZP
3706402	ETB50M05PA67EMA200A	30106-0200	P33RA16BNZP
3706403	ETB50M05PA67ESB300A	30106-0200	P33VA14LBNN
3706404	ETB50M05PA67FMA140A	301063P0001	P33VA14LBNN
3706405	ETB50M05PA67FMA175A	301089P0002	P33VA14LSAN
3706407	ETB50M05PA67FMA200A	301089P0005	P33VA14LSAN
3706487	ETB50M05PA67FMB100A	301089P0006	P33VA14LSBN
3706518	ETB50M05PA67FSB200A	301089P0013	P33VA14LSBN
3706669	ETB50M05PA67FSB280A	301089P0048	P33VA16LBNN
3706830	ETB50M05PA67FSB300A	301089P0049	P33VA16LBNN
3706846	ETB50M05PA67JSB450A	301089P0130	P33VA16LSAN
3707024	ETB50M05PA90FMA150AEUFC	301089P0132	P33VA16LSAN
3707031	ETB50M05PA90FMA200AEUFC	301089P0196	P33VA16LSBN
3707104	ETB50M05PA90FMA250AEUFC	301090P0003	P33VA16LSBN
3707105	ETB50M05PA90FMA320AEUFC	301090P0004	P33YA14GEANGLNW
3707197	ETB50M05PA90FMA500AEUBD	301090P0005	P33YA14GEANGLNW
3707249	ETB50M05PA90FMC200AEUFC	301090P0006	P33YA14GEMNGLNW
3707297	ETB50M05PAN6FCA150A	301093P0001	P33YA14GEMNGLNW

3707298	ETB50M05PB57CSA500A	301093P0002	P33YA14SEANGLNW
3707299	ETB50M05PB57FMA115A	301097P0001	P33YA14SEANGLNW
3707308	ETB50M05PX20FMA100AEUE2	3010FIL	P33YA14SEMNGLNW
3707310	ETB50M05PX57FMA115AEUBB	3010FIL	P33YA14SEMNGLNW
3707313	ETB50M05QA57FMA250A	3010FIL	P33YA16GEANGLNW
3707314	ETB50M05QA90CM65AEUCA	3010FIL	P33YA16GEANGLNW
3707423	ETB50M05QA90FM250AEUFC	301198P0002	P33YA16GEMNGLNW
3707534	ETB50M05QA90FM400AEUFF	301198P0003	P33YA16GEMNGLNW
3707694	ETB50M05QAN6FM300A	301198P0014	P33YA16SEANGLNW
3707858	ETB50M10LA20JM450A	301198P0031	P33YA16SEANGLNW
3707893	ETB50M10LA57FM230A	301207R0002	P33YA16SEMNGLNW
3707910	ETB50M10LA57FMA450A	301237P0001	P33YA16SEMNGLNW
3707912	ETB50M10LA57GMA300A	301249P0016	P33YN14GEANGW
3708030	ETB50M10LA57JM120A	301277P0002	P33YN14GEANGW
3708046	ETB50M10LA67FMA150A	3014 53 14	P33YN14GEMNGW
3708061	ETB50M10MA57CS400A	3014 56 14	P33YN14GEMNGW
3708113	ETB50M10MA57CS500A	3014 60 14	P33YN14SEANGW
3708150	ETB50M10MA57JMB280A	3015FIL	P33YN14SEANGW
3708435	ETB50M10MA67FM200IP	3015FIL	P33YN14SEMNGW
3708436	ETB50M10MA67FM400A	3016FIL	P33YN14SEMNGW
3708465	ETB50M10MA90GM150IPEUFF	3016FIL	P33YN16GEANGW
3708466	ETB50M10NA57FCA280A	3018 04 10	P33YN16GEANGW
3708483	ETB50M10NA57FF500A	3018 06 10	P33YN16GEMNGW
3708484	ETB50M10NA57FF500AEUHV	3018 06 13	P33YN16GEMNGW
3708538	ETB50M10NA57FF50A	3018 08 10	P33YN16SEANGW
3708648	ETB50M10NA57FF700AEUHV	3018 08 13	P33YN16SEANGW
3708656	ETB50M10NA67FCA600A	3018 08 17	P33YN16SEMNGW
3708657	ETB50M10NA67FMA300A	3018 10 13	P33YN16SEMNGW
3708658	ETB50M10PA57CSA200A	3018 10 17	P-3504
3708660	ETB50M10PA57FMA100A	3018 12 13	P-3505
3708779	ETB50M10PA57FMA115A	3018 12 17	P-3510
3708945	ETB50M10PA57FMA160A	3018 12 21	P-3524
3709110	ETB50M10PA57FMA450A	30182-12-12B	P-3525
3709111	ETB50M10PA57FMB175AEUCW	30182-12-12B-SM	P35-32
3709162	ETB50M10PA57JMA300A	30182-12-12-SM	P-3657
3709175	ETB50M10PA67CSA250A	30182-12-8B-SM	P-3664
3709236	ETB50M10PA67ESA260A	30182-16-16B	P-3831
3709307	ETB50M10PA67FMA120A	30182-2-4B	P3A-CA12BGB
3709308	ETB50M10PA67FMA150A	30182-2-4-SM	P3A-CA12BGB
3709326	ETB50M10PA67FMA300A	30182-4-4B	P3A-CA12CGB
3709470	ETB50M10PA67FMA450A	30182-4-4C	P3A-CA12CGB
3709604	ETB50M10PA67FMA920A	30182-4-4-SM	P3A-CS12GMB2CC
3709609	ETB50M10PA67FMB200A	30182-4-6	P3A-CS12GMB2CC
3709611	ETB50M10PA67FXA150AEULQ	30182-4-6B	P3A-DA12MNN
3709708	ETB50M10PA67FXA150AEUOP	30182-4-6-SM	P3A-DA12MNN
3709709	ETB50M10PA90FMA1000AEUKU	30182-6-6B	P3A-EA12BEBGP
3709754	ETB50M10PB57FMA150A	30182-6-6B-SM	P3A-EA12BEBGP
3709756	ETB50M10PB57FMA250A	30182-6-6C-SM	P3A-FA12CCN
3709761	ETB50M10QA57JMB280A	30182-6-6-SM	P3A-FA12CCN
3709801	ETB50M10VA57FCA280A	30182-6-8	P3A-KA00BCA
3709816	ETB50M16LA57FMA120A	30182-6-8B	P3A-KA00BCA
3709817	ETB50M16LA57FMC130A	30182-8-10B	P3A-KA00EAN
3709838	ETB50M16LA57FR200A	30182-8-10-SM	P3A-KA00EAN

3709839	ETB50M16LA57FR250A	30182-8-12B	P3A-KA00ECN
3709840	ETB50M16LA57FR350A	30182-8-4C-SM	P3A-KA00ECN
3709858	ETB50M16LA57FRA350A	30182-8-6B-SM	P3A-KA00EEN
3709859	ETB50M16LA57JM100A	30182-8-6-SM	P3A-KA00EEN
3709866	ETB50M16LA57JMA620A	30182-8-8B	P3A-KA00RZN
3709886	ETB50M16LA67FM600IP	30182-8-8B-SM	P3A-KA00RZN
3709887	ETB50M16LA67FMA500A	30182-8-8C	P3A-LA11ANN
3709889	ETB50M16PA57BCA1000A	30182-8-8-SM	P3A-LA11ANN
3709914	ETB50M16PA57DSA350A	301A-3639	P3A-LA12ANN
3709930	ETB50M16PA57FMA100IPEUAW	301A-3641	P3A-LA12ANN
3709997	ETB50M16PA57FMA350AEUDK	301A-4486	P3A-LA12BNN
3709998	ETB50M16PA57FMB200A	301A-5097	P3A-LA12BNN
3762453	ETB50M16PA57FMC120A	301SN-10	P3A-RA12BLP
3762487	ETB50M16PA57FMC175A	301SN-12	P3A-RA12BLP
3762694	ETB50M16PA57FMC220A	301SN-16	P3A-RA12BMP
3762695	ETB50M16PA57FXA200AEUJV	301SN-20	P3A-RA12BMP
3762698	ETB50M16PA67ESA150A	301SN-24	P3D-CA12KGB
3762819	ETB50M16PA67FMA170A	301SN-32	P3D-CA12KGB
3763061	ETB50M16PA67FMA350AEUS3	301SN-4	P3D-EA00KEBLP
3763387	ETB50M16PA67FMA400A	301SN-5	P3D-EA00KEBLP
3763388	ETB50M16PA67FMA450A	301SN-6	P3D-FA00LEN
3763396	ETB50M16PA67FMB170AEUAH	301SN-8	P3D-FA00LEN
3763501	ETB50M16PA67FMC450A	301TC-10	P3D-KA00BBA
3763502	ETB50M16PA67JMA150A	301TC-12	P3D-KA00BBA
3763556	ETB80M05LA67DC500A	301TC-16	P3D-KA00BKA
3764068	ETB80M05LA67DS400IP	301TC-20	P3D-KA00BKA
3764089	ETB80M05LA67FR1200A	301TC-24	P3D-KA00EAN
3764283	ETB80M05LA67GMA190A	301TC-32	P3D-KA00EAN
3764881	ETB80M05LA77DS320A	301TC-4	P3D-KA00ECN
3766032	ETB80M05LA77DSA180A	301TC-5	P3D-KA00ECN
3766319	ETB80M05LA77FM100A	301TC-6	P3D-KA00EEN
3766351	ETB80M05LA77FM150A	301TC-8	P3D-KA00EEN
3766509	ETB80M05LA77GMA100A	302000K031	P3D-KA00EFA
3766885	ETB80M05LA90DS500AEUFR	3020-1678	P3D-KA00EFA
3766891	ETB80M05LAN6JM100A	302022R0002	P3D-KA00EGN
3766892	ETB80M05NA90FM375AEUIW	3020-4332	P3D-KA00EGN
3766893	ETB80M05PA67CCA100A	3020FIL	P3D-KA00RRN
3767130	ETB80M05PA67CSA100A	3020FIL	P3D-KA00RRN
3767131	ETB80M05PA67FMB500A	3020M5	P3D-KA00RWN
3767148	ETB80M05PA67FRB100A	302-10	P3D-KA00RWN
3767199	ETB80M05PA77DSA125A	302-12	P3D-KAB1AHN
3767201	ETB80M05PA77ESA125A	302123P0001	P3D-KAB1AHN
3767318	ETB80M05PA77FMA150A	302-16	P3D-KAB1ALN
3767326	ETB80M05PA77FMB100A	3021FIL	P3D-KAB1ALN
3767369	ETB80M05PA77FMB200A	3021FIL	P3D-KAB1ANN
3767370	ETB80M05PA77FMB320A	302-20	P3D-KAB1ANN
3767371	ETB80M05PA77FMB450A	302-24	P3D-KAB1AYN
3767373	ETB80M05PA77HFA130A	3022FIL	P3D-KAB1AYN
3767374	ETB80M05PA90FMA120AEUBD	3022FIL	P3D-RA00BNP
3767375	ETB80M05PA90FMA145AEUIB	302306P0001	P3D-RA00BNP
3767376	ETB80M05PA90FMA200AEUIB	302-32	P3E-AA14MGB
3767377	ETB80M05PA90FMB50AEUNX	302332R0001	P3E-AA14MGB
3767378	ETB80M05PAJ4EMA100A	302388P0003	P3E-CA14MGB

3767592	ETB80M05PAJ4FMA100A	302388P0004	P3E-CA14MGB
3767607	ETB80M05PAN6CSA80A	3023FIL	P3E-KA00BKA
3767610	ETB80M05PB77FMB200A	3023FIL	P3E-KA00BKA
3767613	ETB80M05PB77FMC310A	302-4	P3E-KA00BMA
3767618	ETB80M05PD67BMA100A	302429R0001	P3E-KA00BMA
3767621	ETB80M05PD90FMA300AEUNY	302-5	P3E-KA00CBN
3767623	ETB80M05QAJ4FM100IP	302-6	P3E-KA00CBN
3767624	ETB80M05RBJ4FM100A	302-8	P3E-KA00DBN
3767625	ETB80M10LA67FM260A	30282-4-4B	P3E-KA00DBN
3767959	ETB80M10LA67FMA120A	30282-6-6B	P3E-KA00DDN
3767960	ETB80M10LA67FMC120A	30282-8-8B	P3E-KA00DDN
3768025	ETB80M10LA67FR310A	302A-3640	P3E-KA00EAN
3768048	ETB80M10LA77FF100IP	3030-1374	P3E-KA00EAN
3768049	ETB80M10LA77FF450A	3030-1678	P3E-KA00ECN
3768050	ETB80M10LA77FM1000A	3030-1888	P3E-KA00ECN
3768051	ETB80M10LA77FM125A	3030-1897	P3E-KA00EEN
3768052	ETB80M10LA77FM150A	3030-4331	P3E-KA00EEN
3768298	ETB80M10LA77FM350A	3030-4752	P3E-KA00EFA
3768866	ETB80M10LA77FM400A	3030FIL	P3E-KA00EFA
3768935	ETB80M10LA77FMA750A	3030FIL	P3E-KA00EGN
3768936	ETB80M10LA77FS350A	3033FIL	P3E-KA00EGN
3769154	ETB80M10LA77GMA700A	3033FIL	P3E-KA00EHA
3769612	ETB80M10LA77GMB360A	3035FIL	P3E-KA00EHA
3769954	ETB80M10LA77JC200A	3035FIL	P3E-KA00EPN
3770130	ETB80M10LA77JSA370A	3036FIL	P3E-KA00EPN
3770343	ETB80M10LA90FM100AEUHE	3036FIL	P3E-KA00ERN
3770773	ETB80M10LA90FM150AEUHE	30382-4-4	P3E-KA00ERN
3770825	ETB80M10LA90FMA450AEUBH	30382-6-6B	P3E-KA00ETA
3770826	ETB80M10LA90FR620AEUNU	30382-8-8	P3E-KA00ETA
3770827	ETB80M10LA90GMA750IPEUBG	3038FIL	P3E-KA00EVA
3770828	ETB80M10LA90GMA750IPEUOA	3038FIL	P3E-KA00EVA
3770829	ETB80M10LAJ4FMA270A	3039FIL	P3E-KA00REN
3770830	ETB80M10LAJ4GMA500IP	3039FIL	P3E-KA00REN
3771266	ETB80M10NA77CC370A	303KBAW10EVX	P3E-KA00RRN
3772113	ETB80M10NA77CCA370A	303KBAW13EEX	P3E-KA00RRN
3780001	ETB80M10NA77FC370A	303KBAW13EVX	P3E-KA00RWN
3780009	ETB80M10NA90FFA720AEUJF	303KBIW10EVX	P3E-KA00RWN
3780014	ETB80M10PA67CCA260A	303KBIW13EVX	P3E-KA00RZN
3780016	ETB80M10PA67FMA120A	303KBKO06EVX	P3E-KA00RZN
3780017	ETB80M10PA67FMA200A	303KBKO08EVX	P3E-TA00SCN2CN
3780022	ETB80M10PA67FMA250A	303KBTF04EVX	P3E-TA00SCN2CN
3780048	ETB80M10PA67FMA500A	303KBTF06EVX	P3E-VA00A0N
3780062	ETB80M10PA67FMA928A	303SBAW10EVX	P3E-VA00A0N
3780063	ETB80M10PA67FRB200A	303SBAW13EVX	P3HCA12SEMNJLMB
3780074	ETB80M10PA67JMA1300A	303SBIW10EVX	P3HCA12SEMNJLMB
3780086	ETB80M10PA77CCA350A	303SBIW13EVX	P3HDA12PPN
3780087	ETB80M10PA77CMA400A	303SBKO06EEXS	P3HDA12PPN
3780088	ETB80M10PA77CSA100A	303SBKO06EVX	P3HEA11ESMBNHP
3780093	ETB80M10PA77CSA270A	303SBKO08EEXS	P3HEA11ESMBNHP
3780105	ETB80M10PA77DMA200A	303SBKO08EVX	P3HEA11ESMBNYP
3780115	ETB80M10PA77FMA120A	303SBTF04EVX	P3HEA11ESMBNYP
3780124	ETB80M10PA77FMA140A	303SBTF06EVX	P3HEA12ESMBNLP
3780127	ETB80M10PA77FMA200A	303SFKS08EXX	P3HEA12ESMBNLP

3780152	ETB80M10PA77FMA300A	3040-1414	P3HEA12ESMBNMP
3780156	ETB80M10PA77FMA400A	3040-1678	P3HEA12ESMBNMP
3780157	ETB80M10PA77FMA520A	3040-1897	P3HEA12ESMBNZP
3780158	ETB80M10PA77FMA928A	3040-2865	P3HEA12ESMBNZP
3780159	ETB80M10PA77FMB100A	3040-4331	P3HEA12ESSBNHP
3780160	ETB80M10PA77FXA700AEULP	3040-4752	P3HEA12ESSBNHP
3780173	ETB80M10PA77FXA700AEUON	3040FIL	P3HEA12ESSBNJP
3780206	ETB80M10PA77FXA800AEULP	3040FIL	P3HEA12ESSBNJP
3780207	ETB80M10PA77FXA800AEUON	304-12	P3HEA12ESSBNLP
3780223	ETB80M10PA77GMA150A	304-12-DL	P3HEA12ESSBNLP
3780292	ETB80M10PA77JMA200A	304-16	P3HEA12ESSBNMP
3780314	ETB80M10PAJ4CSA270A	304-20	P3HEA12ESSBNMP
3780334	ETB80M10PAJ4FMA100A	304-24	P3HEA12ESSBNYP
3780335	ETB80M10PAJ4FMA270A	304-32	P3HEA12ESSBNYP
3780336	ETB80M10PAJ4FMA300A	304-4	P3HFA11ESMN
3780337	ETB80M10PAJ4FMA450A	304-6	P3HFA11ESMN
3780364	ETB80M10PAJ4JMA200A	3047B	P3HFA11ESSN
3780369	ETB80M10PAJ4JMB850A	3047B	P3HFA11ESSN
3780380	ETB80M10PB77FMA250A	3047BV	P3HHA12BNGP
3780418	ETB80M10PB77GMA150A	3047BV	P3HHA12BNGP
3780445	ETB80M10PB77GMA250A	3047X	P3HHA12BNNP
3780448	ETB80M25LA77FR270A	3047X	P3HHA12BNNP
3780476	ETB80M25LA77FR400A	304-8	P3HKA00CF
3780478	ETB80M25LA77FR450A	3049FIL	P3HKA00CF
3780483	ETB80M25LA90FR250AEUIP3	3049FIL	P3HKA00MC
3780484	ETB80M25LA90FR350AEUIP3	3050-2	P3HKA00MC
3780495	ETB80M25LA90FR400AEUIP3	3050-2023	P3HKA00MD
3780496	ETB80M25LA90FR450AEUIP3	3050-2362	P3HKA00MD
3780498	ETB80M25LA90FR500AEUIP3	3050-2865	P3HKA00MF
3780523	ETB80M25MA77FMC350A	3050-3	P3HKA00MF
3780540	ETB80M25PA77DC450IPEUCW	3050-3041	P3HKA00MK
3780545	ETB80M25PA77FMA1500A	3050-3P	P3HKA00MK
3780547	ETB80M25PA77FMA600AEUT7	3050-4752	P3HKA00ML
3780548	ETB80M25QA67FM450AEUI4	3050FIL	P3HKA00ML
3780601	ETF110QBG2FG161	3050FIL	P3HKA00MM
3780603	ETF210QBG2FG161	3052FIL	P3HKA00MM
3780615	ETF210QBG2FG164	3052FIL	P3HKA00RQ
3780633	ETF210QBP2FG164	3053FIL	P3HKA00RQ
3780634	ETF220QBG2FG164	3053FIL	P3HKA02CY
3780635	ETF220QBP2FG164	3055FIL	P3HKA02CY
3780636	ETF305QBS3FG164	3055FIL	P3HKAD1CP
3780637	ETF310QBG2FG164	3056FIL	P3HKAD1CP
3780641	ETF310QBP2FG164	3056FIL	P3HNA12AD2AP1A
3780642	ETF310QBS2FG164	3060005-100M6-08003-01430	P3HNA12AD2AP1A
3780644	ETF320QBP2FG164	3060005-100M6-08003-01430	P3HNA12AD2VP1A
3780645	ETF4A10QBG2FG164	3060010-100M6-08003-01430	P3HNA12AD2VP1A
3780660	ETF4A10QBP2FG164	3060010-100M6-08003-01430	P3HNA12AS2AD1A
3780667	ETF4A10QBS2FG164	3060010-100M6-08004-01430	P3HNA12AS2AD1A
3780669	ETF4A20QBP2FG164	3060010-100M6-08004-01430	P3HNA12AZ2AM1A
3780671	ETH032M05A11AVFMN0300A	3060-1477	P3HNA12AZ2AM1A
3780673	ETH032M05A11BJGMN0450AUBB	3060-1678	P3HPA/A811131
3780677	ETH032M05A1K1AJMN0250A	3060-4333	P3HPA/A811131
3780709	ETH032M05A1K1BDCN0250B	3060-4752	P3HPA11AD2VD1A

3780710	ETH032M05A1K1BFMN0050A	306061SP	P3HPA11AD2VD1A
3780711	ETH032M05A1K1CFFN0150A	306061SP	P3HPA11AD2VP1A
3780749	ETH032M05A1K1CFFN0200A	3060FIL	P3HPA11AD2VP1A
3780751	ETH032M05A1K1CFMN0100B	3060FIL	P3HPA12AD2AD1A
3780762	ETH032M05A1K1CFMN0700B	306100SP	P3HPA12AD2AD1A
3780765	ETH032M05B1K1AFRN0200A	306100SP	P3HPA12AD2AP1A
3780767	ETH032M05C11AMGMN0380AUBB	306110SP	P3HPA12AD2AP1A
3780770	ETH032M05C1K1ACCN0570B	306110SP	P3HPA12AD2VD1A
3780772	ETH032M05C1K1AFMN0050A	306111SP	P3HPA12AD2VD1A
3780774	ETH032M05C1K1AFMN0300A	306111SP	P3HPA12AD2VP1A
3780783	ETH032M05C1K1BBMN0150A	306120SP	P3HPA12AD2VP1A
3780784	ETH032M05C1K1BFCN0050A	306120SP	P3HPA12AS2AD1A
3780786	ETH032M05C1K1BFMN0050A	306130SP	P3HPA12AS2AD1A
3780787	ETH032M05C1K1BFMN0200A	306130SP	P3HPA12AS2AM1A
3780793	ETH032M05C1K1BFMN0310A	306131SP	P3HPA12AS2AM1A
3780798	ETH032M05C1K1BGCN0450A	306131SP	P3HPA12AS2VD1A
3780799	ETH032M05C1K1CFFN0150A	306133SP	P3HPA12AS2VD1A
3780800	ETH032M05C1K1CFFN0150AUBG	306133SP	P3HPA12AS2VP1A
3780802	ETH032M05C1K1CJCN0050B	306138SP	P3HPA12AS2VP1A
3780803	ETH032M05C1K1CJMN0050A	306138SP	P3HPA12AZ2AD1A
3780804	ETH032M05C1P1GFMN0500A	306140SP	P3HPA12AZ2AD1A
3780809	ETH032M05G1K1CFMN0250A	306140SP	P3HPA12AZ2VD1A
3780812	ETH032M10A1K1AFMN0050A	306156SP	P3HPA12AZ2VD1A
3780813	ETH032M10A1K1BFMN0100A	306156SP	P3HPA12ED2AD1A
3780862	ETH032M10A1K1BFMN0160C	306206SP	P3HPA12ED2AD1A
3780914	ETH032M10A1K1BFMN0250A	306206SP	P3HPA12ES2VP1A
3780950	ETH032M10A1K1BJMN0600A	306224SP	P3HPA12ES2VP1A
3780957	ETH032M10C11APFMN0250A	306224SP	P3HPA12EZ2AD1A
3780965	ETH032M10C1K1AGMN0550A	3062FIL	P3HPA12EZ2AD1A
3780974	ETH032M10C1K1BCSN0450A	3062FIL	P3HRA12BNYP
3780975	ETH032M10C1P1AFMN0300A	306-40038-0	P3HRA12BNYP
3780976	ETH032M10G1K1CFMN0250A	306-40094-0	P3HTA12SGN0000
3780978	ETH032M16A1K1AFMN0550C	306-40111-0	P3HTA12SGN0000
3780979	ETH032M16A1K1CDMN0150A	306-40154-0	P3HTA12SGNC2CN
3781006	ETH032M16A1K1CFMN0200A	306-40156-0	P3HTA12SGNC2CN
3781015	ETH032M16B1K1CFRN0150A	306-40157-0	P3HVA11LN
3781017	ETH032M16C11BIBMN0800AUBB	306-40168-0	P3HVA11LN
3781024	ETH032M16C11BIGMN0800AUBB	306-40216-0	P3KCA13SEMNGLMB
3781025	ETH032M16C1K1AGMN0800A	306-40224-0	P3KCA13SEMNGLMB
3781029	ETH032M16C1K1BFMN0200A	3067FIL	P3KCA13SESNGLMB
3781040	ETH032M16C1K1BGLN0750A	3067FIL	P3KCA13SESNGLMB
3781041	ETH032M16C2K1BFMN0750A	30682-10-10B	P3KCB14SEANGLMB
3781043	ETH050M05A11CDFMN0100A	30682-10-10-SM	P3KCB14SEANGLMB
3781050	ETH050M05A1K1BDMN0200A	30682-10-8B	P3KCB14SEMNGLMB
3781051	ETH050M05A1K1BFFN0200A	30682-10-8-SM	P3KCB14SEMNGLMB
3781054	ETH050M05A1K1BFMN0200A	30682-12-12B	P3KCB14SESNGLMB
3781060	ETH050M05A1K1BGMN0050A	30682-12-12B-SM	P3KCB14SESNGLMB
3781061	ETH050M05A1K1CFLN0100A	30682-12-12C-SM	P3KDA14PPN
3781062	ETH050M05A1K1CFMN0200A	30682-12-12-SM	P3KDA14PPN
3781080	ETH050M05A1K1DFMN0100A	30682-16-16B	P3KDA14SCN0000
3781081	ETH050M05A1K1EFMN0450A	30682-16-16C-SM	P3KDA14SCN0000
3781082	ETH050M05A1K1EFMN0600A	30682-16-16-SM	P3KDA14SCNB2CN
3781094	ETH050M05A1K1EFSN0230A	30682-4-4B	P3KDA14SCNB2CN

3781098	ETH050M05A1K1EGMN0250A	30682-4-4C-SM	P3KEA13ESMBNNP
3781100	ETH050M05A1K1EGMN0250AUBB	30682-4-4-SM	P3KEA13ESMBNNP
3781101	ETH050M05A3P1GGMN0500B	30682-5-4B	P3KEA13ESSBNGP
3781103	ETH050M05A5K1BGMN0050A	30682-5-4-SM	P3KEA13ESSBNGP
3781110	ETH050M05B1K1EFMN0150A	30682-5-6B	P3KEA13ESSBNNP
3781123	ETH050M05B1K1EFMN0150AUBB	30682-6-4B	P3KEA13ESSBNNP
3781137	ETH050M05B2K1EFMN0450A	30682-6-6	P3KFA/C00007
3781211	ETH050M05C11ALECN0550A	30682-6-6B-SM	P3KFA/C00007
3781217	ETH050M05C11AWCSN1200C	30682-6-6C-SM	P3KFA/C001
3781221	ETH050M05C1K1BFRN0350A	30682-6-6-SM	P3KFA/C001
3781227	ETH050M05C1K1CDMN0200CUAN	30682-8-6B	P3KFA/C002
3781228	ETH050M05C1K1CFMN0050A	30682-8-8	P3KFA/C002
3781234	ETH050M05C1K1CFMN0300A	30682-8-8B	P3KFA/H00002
3781251	ETH050M05C1K1CFMN0540A	3070-1897	P3KFA/H00002
3781253	ETH050M05C1K1CFMN0850A	3070-2023	P3KFA13ASMN
3781278	ETH050M05C1K1CFRN0090A	3070-2735	P3KFA13ASMN
3781310	ETH050M05C1P1AFMN0530A	3070-2865	P3KFA13DSAN
3781321	ETH050M05C1P1GFFN0050A	3070-3745	P3KFA13DSAN
3781325	ETH050M05C1P1GFMN0050A	3070-4333	P3KFA13DSMN
3781326	ETH050M05C3K1FESN0200C	3075010-100M6-08003-01940	P3KFA13DSMN
3781354	ETH050M05C3P1GDMN0120A	3075010-100M6-08003-01940	P3KFA14GSAN
3781376	ETH050M05F2K1BJCN0200A	3075010-115M8-09502-01940	P3KFA14GSAN
3781385	ETH050M05J3P1GFLN0170AUAD	3075010-115M8-09502-01940	P3KHA14BNGP
3781403	ETH050M05K1K1FJMN0110A	3080-1477	P3KHA14BNGP
3781407	ETH050M05K2P1GFLN0170A	3080-1897	P3KKA00CG
3781425	ETH050M05K4P1GFLN0170AUAD	3080-1917	P3KKA00CG
3781438	ETH050M10A1K1CFMN0300A	3080-3745	P3KKA00CH
3781439	ETH050M10A1K1CJMN0100A	3080-4332	P3KKA00CH
3781440	ETH050M10A1K1EFMN0050A	3080-4752	P3KKA00CJ
3781441	ETH050M10A1K1EFMN0200A	3083FIL	P3KKA00CJ
3781442	ETH050M10A1K1EFMN0270A	3083FIL	P3KKA00EAC
3781444	ETH050M10A1K1EJMN0320AUBB	3084FIL	P3KKA00EAC
3781445	ETH050M10B21ATDSN0150A	3084FIL	P3KKA00ESA
3781446	ETH050M10C11AWJMN0320A	3085-00100	P3KKA00ESA
3781447	ETH050M10C11AWJMN0330A	3085-00100	P3KKA00ESC
3781448	ETH050M10C11AWJMN0330AUBB	3085-00240	P3KKA00ESC
3781450	ETH050M10C1K1CFMN0150B	3085-00240	P3KKA00ESE
3781453	ETH050M10C1K1CFMN0300B	3085-00276	P3KKA00ESE
3781454	ETH050M10C1K1CJMN0150A	3085-00276	P3KKA00ESG
3781460	ETH050M10C1K1FCCN0550A	3085-00300	P3KKA00ESG
3781470	ETH050M10K1K1BFMN0100AUAA	3085-00300	P3KKA00MC
3781471	ETH050M20A1K1BFRN0350A	3085-00315	P3KKA00MC
3781477	ETH050M20A3K1CGCN1200CUAL	3085-00315	P3KKA00ML
3781480	ETH050M20C1K1BNLN1100A	3085-00346	P3KKA00ML
3781487	ETH050M20C1K1CFSN0550A	3085-00346	P3KKA04CY
3781503	ETH050M20C2K1BNMN1100AUBQ	3085-00550	P3KKA04CY
3781504	ETH080M05A11CEFMN0100A	3085-00550	P3KKB00CB
3781505	ETH080M05A1K1DDMN0380A	3085-00800	P3KKB00CB
3781507	ETH080M05A1K1DDMN0430A	3085-00800	P3KNA/H00001
3781520	ETH080M05A1P1BDCN0250A	3085-01210	P3KNA/H00001
3781530	ETH080M05A1P1BGMN0100A	3085-01210	P3KNA/H00003
3781533	ETH080M05A2K1EFLN0400A	3085-02800	P3KNA/H00003
3781534	ETH080M05A2K1JFMN0100A	3085-02800	P3KNA/H00004

3781536	ETH080M05C1K1DFMN0650A	3086-00500	P3KNA/H00004
3781542	ETH080M05C1P1BESN0600A	3086-00500	P3KNA14AD2VD1A
3781546	ETH080M05C1P1HDSN0200B	3087FIL	P3KNA14AD2VD1A
3781557	ETH080M10A1K1EFMN0350A	3087FIL	P3KNA14AS2AD1A
3781558	ETH080M10A1K1KFLN1000A	3088 04 04	P3KNA14AS2AD1A
3781563	ETH080M10A1K1KFMN0400A	3088 04 06	P3KNA14AS2AM1A
3781564	ETH080M10A1K1KFRN0400A	3088 06 06	P3KNA14AS2AM1A
3781568	ETH080M10A1K1KFSN0230A	3088 06 08	P3KNA14AS2VD1A
3781613	ETH080M10A1K1KJMN0200A	3088 08 08	P3KNA14AS2VD1A
3781614	ETH080M10A1P1HFLN0100A	3088 08 10	P3KNA14AZ2AM1A
3781639	ETH080M10A1P1HFMN0650A	3088 10 10	P3KNA14AZ2AM1A
3781640	ETH080M10A2K1KGLN0300A	3088 10 12	P3KRA/C002
3781649	ETH080M10C1K1EFMN0300B	3088 12 12	P3KRA/C002
3781650	ETH080M10C1K1EFMN0600A	30882-10-10B	P3KRA14BNLP
3781663	ETH080M10C1K1JJFN1000A	30882-4-4B	P3KRA14BNLP
3781681	ETH080M10C1K1KCSN0550A	30882-6-6B	P3KRA14BNYP
3781683	ETH080M10C1K1KFMN0160B	30882-6-6-SM	P3KRA14BNYP
3781684	ETH080M10C1K1KFMN0340B	3089 04 04	P3KTA14SGN0000
3781688	ETH080M10C1P1HFMN0400A	3089 04 06	P3KTA14SGN0000
3781714	ETH080M10C31BBFMN0150A	3089 06 04	P3LCA12PEPNGLNW
3781717	ETH080M10C3K1JCSN0830A	3089 06 06	P3LCA12PEPNGLNW
3781724	ETH080M10C3P1BJLN0750A	3089 06 08	P3LCA12PGPNGLNW
3781727	ETH080M10C4K1JFSN0150B	3089 08 08	P3LCA12PGPNGLNW
3781730	ETH080M32A21CIFRN0270BUAL	3089 08 10	P3LEA12EPPBNGP
3781731	ETH080M32A41BZFMN0150B	3089 10 10	P3LEA12EPPBNGP
3781737	ETH100M10A1K1LJMN0200A	3089 10 12	P3LEA12EPSBNGP
3781738	ETH100M10A1P1CFLN0100A	3089 12 12	P3LEA12EPSBNGP
3781740	ETH100M20A4P1CDMN0450A	3089FIL	P3LEA12EPSBNNP
3781742	ETM10-316	3089FIL	P3LEA12EPSBNNP
3781743	ETM10-6MO	3090-1477	P3LEA12GPPBNNP
3781750	ETM10-6MO-NC	3091 04 10	P3LEA12GPPBNNP
3781759	ETM10-B	3091 06 10	P3LFA12APPN
3781760	ETM10-IIY	3091 08 10	P3LFA12APPN
3781779	ETM10-M	3091 08 13	P3LFA12CPPN
3781780	ETM10-NNR	3091 10 17	P3LFA12CPPN
3781800	ETM10-NNR-NC	30-931-000	P3LFA12EPPN
3781844	ETM10-TTZ	30-931-000	P3LFA12EPPN
3781845	ETM12-316	3096FIL	P3LFA12EPSN
3781847	ETM12-6MO	3096FIL	P3LFA12EPSN
3781848	ETM12-6MO-NC	30BFX16	P3LFA12GPSN
3781849	ETM12-825	30BV4002-SOG	P3LFA12GPSN
3781861	ETM12-B	30BV6002-SOG	P3LKA00BPN
3781867	ETM12-IIY	30BV9002	P3LKA00BPN
3781890	ETM12-M	30BV9002-SOG	P3LKA00BPS
3781898	ETM12-NNR	30CC02AV4D6B	P3LKA00BPS
3781899	ETM12-TTZ	30CC02AV4D6B	P3LKA00CB1
3781900	ETM14-316	30CC02EV4D6E	P3LKA00CB1
3781902	ETM15-316	30CC02EV4D6E	P3LKA00CB3
3781924	ETM15-B	30CU02EV4B2B	P3LKA00CB3
3781971	ETM15-NNR	30CU02EV4B2B	P3LKA00ESE
3781980	ETM16-316	30CU02EV4D6B	P3LKA00ESE
3781987	ETM16-6MO	30CU02EV4D6B	P3LKA00MP
3782004	ETM16-6MO-NC	30CU02GV4B2A	P3LKA00MP

3782009	ETM16-MMX	30CU02GV4B2A	P3LKA00MR
3782034	ETM16-TTZ	30CU02JV4D6B	P3LKA00MR
3782058	ETM18-316	30CU02JV4D6B	P3LKA00MW
3782090	ETM18-6MO	30GV9008-SOGWO	P3LKA00MW
3782119	ETM18-IIY	30GV9078	P3LLA12LPNN
3782120	ETM18-TTZ	30GV9078-SOG	P3LLA12LPNN
3782121	ETM20-316	30GV9078-SOGWO	P3LRA12BNGP
3782125	ETM20-6MO	30KAAK21SPN	P3LRA12BNGP
3782170	ETM20-6MO-NC	30KAAN13SPX	P3LRA12BNNP
3782180	ETM20-B	30KAAN17SPX	P3LRA12BNNP
3782181	ETM20-TTZ	30KAAN21SPX	P3LRX/A00001
3782190	ETM22-316	30KAAW13SPN	P3LRX/A00001
3782191	ETM2-316	30KAAW13SPNS	P3LRX12BNNP
3782194	ETM25-316	30KAAW13SPX	P3LRX12BNNP
3782211	ETM25-6MO	30KAAW17SPN	P3MCA16SEMNGLMB
3782212	ETM25-B	30KAAW17SPNS	P3MCA16SEMNGLMB
3782231	ETM25-IIY	30KAAW17SPX	P3MDA16SCN0000
3782233	ETM25-MMX	30KAAW21SPN	P3MDA16SCN0000
3782236	ETM25-NNR	30KAAW21SPNS	P3MEA14ESABNNN
3782238	ETM25-TTZ	30KAAW21SPX	P3MEA14ESABNNN
3782250	ETM3-316	30KAAW21SVN	P3MEA14ESMBNGN
3782272	ETM3-NNR	30KAIN13SPX	P3MEA14ESMBNGN
3782299	ETM4-316	30KAIN17SPX	P3MEA14ESMBNNN
3782305	ETM4-B	30KAIN21SPX	P3MEA14ESMBNNN
3782314	ETM6-316	30KAIW13SPN	P3MEA14ESMBNYN
3782326	ETM6-316-OXY	30KAIW13SPNS	P3MEA14ESMBNYN
3782362	ETM6-6MO	30KAIW13SPX	P3MEA14ESSBNGN
3782368	ETM6-B	30KAIW17SPN	P3MEA14ESSBNGN
3782376	ETM6-IIY	30KAIW17SPNS	P3MEA14ESSBNJN
3782400	ETM6-M	30KAIW17SPX	P3MEA14ESSBNJN
3782409	ETM6-NNR	30KAIW17SPXS	P3MEA16ESMBNJN
3782411	ETM6-TTZ	30KAIW17SVN	P3MEA16ESMBNJN
3782413	ETM8-316	30KAIW21SPN	P3MEA16ESMBNMN
3782415	ETM8-6MO	30KAIW21SPNS	P3MEA16ESMBNMN
3782417	ETM8-B	30KAIW21SPX	P3MEA16ESMBNNN
3782421	ETM8-IIY	30KATF06SPN	P3MEA16ESMBNNN
3782436	ETM8-M	30KATF06SPX	P3MEA16ESMBNZN
3782439	ETS32M05PA20ESA150A	30KATF08SPN	P3MEA16ESMBNZN
3782442	ETS32M05PA20FMA100A	30KATF08SPNS	P3MEA18ESABNMN
3782446	ETS32M05PA20FMA120A	30KATF08SPX	P3MEA18ESABNMN
3782447	ETS32M05PA20FMA240A	30KATF09SPX	P3MEA18ESABNZN
3782451	ETS32M05PA20FMA50A	30KATF10SPN	P3MEA18ESABNZN
3782462	ETS32M05PA20FMA80A	30KATF10SPNS_01	P3MEA18ESMBNNN
3782497	ETS32M05PZ20JMA230A	30KATF10SPX	P3MEA18ESMBNNN
3782509	ETS50M05PA30FFB115A	30KATF13SPN	P3MEA18ESSBNJN
3782520	ETS50M05PA30FMA100A	30KATF13SPNS_01	P3MEA18ESSBNJN
3782556	ETS50M05PA30FMA120A	30KATF13SPX	P3MEA18ESSBNMN
3782592	ETS50M05PA30FMA140A	30KATP10SPX	P3MEA18ESSBNMN
3782636	ETV100M05LA90FMA180AEUNW	30KATP13SPX	P3MFA14ASMN
3782650	ETV100M10LA90DC580AEUOV	30MAH16RH12	P3MFA14ASMN
3782658	ETV100M10PA87FMA100AEUBR	30MAH4RH12	P3MFA14DSAN
3782660	ETV100M10PA90FMA200AEUJY	30MAH6RH12	P3MFA14DSAN
3782699	ETV100M10PA90FMA220AEUJY	30MAH9RH12	P3MFA14DSMN

3782700	ETV100M10PA90FMA260AEUJY	30MARH12RH12	P3MFA14DSMN
3782743	ETV100M10PA90FMA350AEUJY	30MARH9RH12	P3MFA14ESAN
3782779	ETV100M10PAJ6JMA200A	30P105QBM3KG161	P3MFA14ESAN
3782798	ETV100M10PAJ6JMC200A	30P105QBT1KG161	P3MFA14ESMN
3782805	ETV100M10PAP5JMA100A	30P110QBF3KG161	P3MFA14ESMN
3782807	ETV100M10QA87FMA100AEUOK	30P110QBM3KG161	P3MFA16ESSN
3782813	ETV32M05PA47CSA150A	30P110QBT1KG161	P3MFA16ESSN
3782828	ETV32M05PA47CSA70A	30P205QBT1KG161	P3MFA18DSMN
3782829	ETV32M05PA47FMA140IP	30P210QBM3KG161	P3MFA18DSMN
3782830	ETV32M05PA47FMA150IP	30P210QBT1KG161	P3MFA18ESSN
3782984	ETV32M05PA47FMA150IPEUKY	30RVP6072	P3MFA18ESSN
3783000	ETV32M05PA47FMB50A	30RVP6072-CE	P3MFA18GSAN
3783004	ETV32M05PA47FMC60A	30RVP6072-HT	P3MFA18GSAN
3783024	ETV32M10LA47FMA520A	30RVP6072-SOG	P3MFA18GSMN
3783039	ETV32M10PA47CSA200A	30SC16071	P3MFA18GSMN
3783040	ETV32M10PA90FMB450AEUGC	30SC16072	P3MKA00BSA
3783042	ETV32M10QA47CSA60A	30SC16082	P3MKA00BSA
3783044	EV05/04	30SFAK13SXN	P3MKA00CF
3783047	EV05/04N	30SFAK13SXNS	P3MKA00CF
3783080	EV05/04R	30SFAK13SXNS_01	P3MKA00CG
3783081	EV05/05	30SFAK17SXN	P3MKA00CG
3783082	EV05/05E	30SFAK17SXNS	P3MKA00ESC
3783091	EV05/05N	30SFAK21SXN	P3MKA00ESC
3783104	EV05/05R	30SFAK21SXNS	P3MKA00ESE
3783144	EV05/06	30SFAN13SXN	P3MKA00ESE
3783160	EV05/06E	30SFAN17SXN	P3MKA00MM
3783162	EV05/06R	30SFAW13SXN	P3MKA00MM
3783182	EV05/06RS	30SFAW13SXNS	P3MKA00MW
3783202	EV06L71	30SFAW17SXN	P3MKA00MW
3783207	EV06LCF	30SFAW17SXNS	P3MKAD4CP
3783208	EV06LOMD71	30SFAW21SXN	P3MKAD4CP
3783214	EV06LOMDCF	30SFAW21SXNS	P3MKAD6CP
3783238	EV06LRED71	30SFIW13SXN	P3MKAD6CP
3783244	EV06LREDCF	30SFIW17SXN	P3MLA14LSMN
3783248	EV06LVITOMDCF	30SFIW17SXNS_01	P3MLA14LSMN
3783250	EV06SCF	30SFIW21SXN	P3MMA160N
3783254	EV06SOMD71	30SFIW21SXNS_03	P3MMA160N
3783269	EV06SOMDCF	30SFTF06SXN	P3MRA14BNGN
3783270	EV06ZL71	30SFTF06SXNS	P3MRA14BNGN
3783273	EV06ZLCF	30SFTF08SXN	P3MRA14BNHN
3783283	EV08LCF	30SFTF08SXNS_01	P3MRA14BNHN
3783285	EV08LOMD71	30SFTF09SXN	P3MRA14BNJN
3783287	EV08LOMDCF	30SFTF10SXN	P3MRA14BNJN
3783288	EV08LVITOMDCF	30SFTF10SXNS_01	P3MRA14BNNN
3783307	EV08SCF	30SFTF13SXN	P3MRA14BNNN
3783308	EV08SOMD71	30SFTP06MXX	P3MRA16BNJN
3783309	EV08SOMDCF	30SFTP10MXX	P3MRA16BNJN
3783319	EV08SVITOMDCF	30SFTP10MXXS_01	P3MRA16BNLN
3783320	EV08ZL71	30UFX16	P3MRA16BNLN
3783321	EV08ZLCF	30V-0S-0000	P3MRA16BNYN
3783322	EV08ZLREDCF	30VM4001	P3MRA16BNYN
3783323	EV08ZSCF	30VM4001-SOG	P3MTA16SCNB2CN
3783324	EV10/06	30VM4001-SOGWO	P3MTA16SCNB2CN

3783328	EV10/06E	30VM4002-SOG	P3MVA18LN
3783330	EV10/06N	30VM4002-SOGWO	P3MVA18LN
3783367	EV10/06R	30VM4071	P3NCA18SEANNLMB
3783376	EV10/08	30VM4071-B	P3NCA18SEANNLMB
3783377	EV10/08E	30VM4071-GY	P3NCA18SEMNNLMB
3783383	EV10/08N	30VM4071-SOG	P3NCA18SEMNNLMB
3783384	EV10/08R	30VM4071-SOGWO	P3NCB18SEANNLMB
3783407	EV10-1/4B	30VM4071-TG	P3NCB18SEANNLMB
3783424	EV10-3/8B	30VM4072	P3NCB18SEMNNLMB
3783457	EV10L71	30VM4072-SOGWO	P3NCB18SEMNNLMB
3783491	EV10LCF	30VM4073	P3NEA16ESABNN
3783513	EV10LMEDOMDCF	30VM4073-SOG	P3NEA16ESABNN
3783523	EV10LOMD71	30VM4073-SOGWO	P3NEA16GSMBNN
3783564	EV10LOMDCF	30VM4074	P3NEA16GSMBNN
3783565	EV10LREDOMDCF	30VM4075	P3NEA18ESABNH
3783604	EV10LREDVITOMDCF	30VM4081	P3NEA18ESABNH
3784024	EV10LVITOMDCF	30VM4081-SOG	P3NEA18ESABNN
3784025	EV10S71	30VM4081-SOGWO	P3NEA18ESABNN
3784040	EV10SCF	30VM4082	P3NEA18ESMBNH
3784041	EV10SOMD71	30VM4082-SOGWO	P3NEA18ESMBNH
3784042	EV10SOMDCF	30VM4083	P3NEA18ESMBNN
3784043	EV10SVITOMDCF	30VM4083-SOGWO	P3NEA18ESMBNN
3784050	EV10ZL71	30VM4084	P3NEA18GSABNN
3784051	EV10ZLCF	30VM4084-SOGWO	P3NEA18GSABNN
3784060	EV10ZLREDCF	30VM4085	P3NEA18GSMBNN
3784061	EV10ZSCF	30VM4085-SOGWO	P3NEA18GSMBNN
3784070	EV12L71	30VM4872	P3NEA1PESMBNN
3784071	EV12LCF	30VM4882	P3NEA1PESMBNN
3784080	EV12LOMD71	30VM4882-SOGWO	P3NEA98GSABNN
3784081	EV12LOMDCF	30VM6001	P3NEA98GSABNN
3784100	EV12LREDCF	30VM6001-SOG	P3NEA98GSMBNG
3784101	EV12LREDOMDCF	30VM6001-SOGWO	P3NEA98GSMBNG
3784120	EV12LVITOMDCF	30VM6002-SOG	P3NFA16DSA
3784128	EV12S71	30VM6071	P3NFA16DSA
3784129	EV12SCF	30VM6071-O1S	P3NFA16ESA
3784340	EV12SMEDOMDCF	30VM6071-SOG	P3NFA16ESA
3784500	EV12SOMD71	30VM6071-SOGWO	P3NFA16ESM
3784501	EV12SOMDCF	30VM6072	P3NFA16ESM
3784507	EV12SREDCF	30VM6073	P3NFA16FSA
3785006	EV12SREDOMDCF	30VM6073-CM	P3NFA16FSA
3785038	EV12ZLCF	30VM6073-SOG	P3NFA18DSA
3785045	EV12ZLREDCF	30VM6074	P3NFA18DSA
3785046	EV12ZS71	30VM6075	P3NFA18DSM
3785048	EV12ZSCF	30VM6081	P3NFA18DSM
3785049	EV13/06	30VM6082	P3NFA18ESA
3785055	EV13/06DX	30VM6083	P3NFA18ESA
3785062	EV13/06E	30VM6084	P3NFA18ESM
3785090	EV13/06FX	30VM6085	P3NFA18ESM
3785114	EV13/06FX04	30VM6085-SOGWO	P3NFA18ESS
3785132	EV13/06R	30VM6872	P3NFA18ESS
3785133	EV13/08	30VM6882	P3NFA18GSA
3785135	EV13/08DX	30VM9001	P3NFA18GSA
3785136	EV13/08E	30VM9001-SOG	P3NFA18GSM

3785137	EV13/08FX	30VM9001-SOGWO	P3NFA18GSM
3785190	EV13/08FX06	30VM9002	P3NFA18HSA
3785192	EV13/08N	30VM9002-SOG	P3NFA18HSA
3785200	EV13/08R	30VM9002-SOGWO	P3NFA18HSM
3785203	EV13/10	30VM9003-SOGWO	P3NFA18HSM
3785213	EV13/10R	30VM9004-SOG	P3NFA18QSM
3785220	EV13/12	30VM9004-SOGWO	P3NFA18QSM
3785236	EV13/12R	30VM9005-SOGWO	P3NFA1PGSM
3785257	EV15-1/2B	30VM9013-SOGWO	P3NFA1PGSM
3785267	EV15L71	30VM9071	P3NFA26FSM-J137A
3785275	EV15LCF	30VM9071-SOG	P3NFA26FSM-J137A
3785277	EV15LMEDOMDCF	30VM9071-SOGWO	P3NFA28FSM
3785333	EV15LOMD71	30VM9071-WO	P3NFA28FSM
3785336	EV15LOMDCF	30VM9072	P3NFA98DSA
3785338	EV15LREDCF	30VM9072-SOG	P3NFA98DSA
3785351	EV15LVITOMDCF	30VM9072-SOGWO	P3NFA98GSA
3785352	EV15ZLCF	30VM9073	P3NFA98GSA
3785379	EV15ZLREDCF	30VM9073-SOG	P3NFA98GSM
3785431	EV16S71	30VM9074	P3NFA98GSM
3785436	EV16SCF	30VM9075	P3NKA00BSM
3785450	EV16SMEDOMDCF	30VM9075-SOG	P3NKA00BSM
3785461	EV16SOMD71	30VM9081	P3NKA00ESA
3785483	EV16SOMDCF	30VM9081-SOGWO	P3NKA00ESA
3785486	EV16SREDCF	30VM9082	P3NKA00ESC
3785504	EV16SREDOMD71	30VM9082-SOGWO	P3NKA00ESC
3785514	EV16SVITOMDCF	30VM9083	P3NKA00ESE
3785515	EV16ZS71	30VM9084	P3NKA00ESE
3785518	EV16ZSCF	30VM9085	P3NKA00ESG
3785541	EV17/08	30VM9872	P3NKA00ESG
3785550	EV17/08FX06	30VM9882	P3NKA00MW
3785551	EV17/08N	30VM9882-SOGWO	P3NKA00MW
3785555	EV17/10	30VN6071-SOG	P3NKA00PM
3785561	EV17/10R	30VRMM4812	P3NKA00PM
3785566	EV17/12	30VRMM4812-C10	P3NKA00PN
3785570	EV17/12FX09	30VRMM4812-C4	P3NKA00PN
3785593	EV17/12FX10	30VRMM4812-GY	P3NKA00RL
3785604	EV17/12N	3-1 HBZ-SS	P3NKA00RL
3785609	EV17/12R	3-1/8 ZHLW2-SS	P3NKA00RN
3785641	EV18L71	3100 00 01 33	P3NKA00RN
3785662	EV18LCF	3100 04 00	P3NKA00RR
3785682	EV18LMEDCF	3100 06 00	P3NKA00RR
3785706	EV18LOMD71	3100 08 00	P3NKA0BMW
3785712	EV18LOMDCF	3100 10 00	P3NKA0BMW
3785717	EV18LREDCF	3100 12 00	P3NKB16CL
3785730	EV18LREDOMD71	3100 56 00 99	P3NKB16CL
3785731	EV18LREDOMDCF	3100 60 00 99	P3NKB16CP
3785735	EV18LVITOMDCF	3100-2023	P3NKB16CP
3785744	EV18ZLCF	3100-2472	P3NKB18CL
3785754	EV20S71	31009M-NV	P3NKB18CL
3785760	EV20SCF	3101 00 00 50	P3NKB18CP
3785780	EV20SMEDOMDCF	3101 00 01 55	P3NKB18CP
3785790	EV20SOMD71	3101 00 01 56	P3NKB1BCL
3785791	EV20SOMDCF	3101 03 09	P3NKB1BCL

3785795	EV20SREDOMD71	3101 03 09 52	P3NKB1BCP
3785802	EV20SREDOMDCF	3101 03 19	P3NKB1BCP
3785835	EV20SVITOMDCF	3101 04 09	P3NLA16LSN
3785851	EV20ZS71	3101 04 10	P3NLA16LSN
3785865	EV20ZSCF	3101 04 10 52	P3NLA18LSM
3785866	EV20ZSREDCF	3101 04 13	P3NLA18LSM
3785903	EV22L71	3101 04 13 52	P3NLA18LSN
3785948	EV22LCF	3101 04 19	P3NLA18LSN
3785952	EV22LDPR71CF	3101 04 19 52	P3NLA28LSN
3785956	EV22LOMD71	3101 04 55	P3NLA28LSN
3785958	EV22LOMDCF	3101 05 10	P3NLA96LSN
3785968	EV22LREDCF	3101 06 10	P3NLA96LSN
3786000	EV22LREDOMDCF	3101 06 10 52	P3NLA98LSN
3786001	EV22LVITOMDCF	3101 06 13	P3NLA98LSN
3786035	EV22ZL71	3101 06 13 52	P3NRA16BNN
3786058	EV22ZLCF	3101 06 17	P3NRA16BNN
3786060	EV22ZLREDCF	3101 06 19	P3NRA16BPP
3786110	EV25SCF	3101 06 19 52	P3NRA16BPP
3786164	EV25SOMD71	3101 06 21	P3NRA18BNG
3786198	EV25SOMDCF	3101 06 55	P3NRA18BNG
3786217	EV25SREDOMD71	3101 06 60	P3NRA18BNH
3786228	EV25SREDOMDCF	3101 06 67	P3NRA18BNH
3786268	EV25SVITOMDCF	3101 08 10	P3NRA18BNL
3786270	EV25ZSCF	3101 08 10 52	P3NRA18BNL
3786277	EV28L71	3101 08 13	P3NRA18BNM
3786279	EV28LCF	3101 08 13 52	P3NRA18BNM
3786284	EV28LOMD71	3101 08 17	P3NRA18BNN
3786292	EV28LOMDCF	3101 08 17 52	P3NRA18BNN
3786297	EV28LREDOMDCF	3101 08 21	P3NRA18BPP
3786308	EV28LVITOMDCF	3101 08 60	P3NRA18BPP
3786314	EV28ZL71	3101 08 67	P3NRA1PBNN
3786316	EV28ZLCF	3101 10 13	P3NRA1PBNN
3786318	EV28ZLREDCF	3101 10 13 52	P3NRA2PBNG
3786322	EV30A0100	3101 10 17	P3NRA2PBNG
3786323	EV30A0100	3101 10 21	P3NRA96BPP
3786344	EV30A0200	3101 12 13	P3NRA96BPP
3786395	EV30A0200	3101 12 17	P3NRA98BNH
3786403	EV30A1100	3101 12 21	P3NRA98BNH
3786408	EV30A1100	3101 14 17	P3NRA98BNN
3786411	EV30A1200	3101 14 21	P3NRA98BNN
3786432	EV30A1200	3101 16 17	P3RA10232
3786434	EV30A3100	3101 16 21	P3RA10232
3786450	EV30A3100	310-10340-0	P3RA10242
3786462	EV30A3200	3102 00 00 02	P3RA10242
3786469	EV30A3200	3102 00 00 30	P3RA10262
3786488	EV30C1100	3102 04 00	P3RA10262
3786537	EV30C1100	3102 04 00 52	P3RA30232
3786585	EV30J1100	3102 04 06	P3RA30232
3786586	EV30J1100	3102 05 00	P3TFA229AAN
3786587	EV30J1200	3102 06 00	P3TFA229AAN
3786588	EV30J1200	3102 06 00 52	P3TFA22CAAN
3786589	EV30J3100	3102 06 08	P3TFA22CAAN
3786619	EV30J3100	3102 08 00	P3TFA24ACMN

3786623	EV30J3100MONTEE	3102 08 00 52	P3TFA24ACMN
3786635	EV30J3100MONTEE	3102 08 10	P3TFA24CCAN
3786643	EV30J3200	3102 10 00	P3TFA24CCAN
3786644	EV30J3200	3102 10 12	P3TFA269DAN
3786646	EV30M0100	3102 12 00	P3TFA269DAN
3786649	EV30M0100	3102 14 00	P3TFA26ADMN
3786650	EV30M0200	3102 16 00	P3TFA26ADMN
3786651	EV30M0200	3102 56 00	P3TFA26CDAN
3786655	EV30M1100	3102 60 00	P3TFA26CDAN
3786657	EV30M1100	3102 60 62	P3TFA28AEMN
3786673	EV30M1200	3102 62 00	P3TFA28AEMN
3786678	EV30M1200	3103 04 10	P3TFA28CEAN
3786702	EV30M3100	3103 04 13	P3TFA28CEAN
3786708	EV30M3100	3103 06 10	P3TFA28WEAN
3786716	EV30M3200	3103 06 13	P3TFA28WEAN
3786814	EV30M3200	3103 08 10	P3TFA2B9FAN
3786833	EV30S71	3103 08 13	P3TFA2B9FAN
3786838	EV30SCF	3103 08 17	P3TFA2BAFMN
3786839	EV30SOMD71	3103 10 13	P3TFA2BAFMN
3786840	EV30SOMDCF	3103 10 17	P3TFA2BCFAN
3786842	EV30SVITOMDCF	3103 10 21	P3TFA2BCFAN
3786843	EV30ZSCF	3103 12 13	P3TFA2BWGAN
3786845	EV30ZSREDCF	3103 12 17	P3TFA2BWGAN
3786848	EV35L71	3103 12 21	P3TFA2C9HAN
3786849	EV35LCF	3103 14 17	P3TFA2C9HAN
3786853	EV35LOMD71	3103 14 21	P3TFA2CCHAN
3786855	EV35LOMDCF	3103 16 17	P3TFA2CCHAN
3786867	EV35LVITOMDCF	3103 16 21	P3TFA2D9KAN
3786869	EV35ZL71	3103 56 14	P3TFA2D9KAN
3786875	EV38SCF	3103 60 14	P3TJA13A1AN
3786892	EV38SOMD71	3103 60 18	P3TJA13A1AN
3786905	EV38SOMDCF	3104 00 00 20	P3TJA13A7AN
3786906	EV38SREDOMD71	3104 03 00	P3TJA13A7AN
3786907	EV38SVITOMDCF	3104 04 00	P3TKA00CBA
3786908	EV38ZSCF	3104 04 00 52	P3TKA00CBA
3786909	EV38ZSREDCF	3104 04 06	P3TKA00CBD
3786910	EV42L71	3104 05 00	P3TKA00CBD
3786911	EV42LCF	3104 06 00	P3TKA00CBJ
3786912	EV42LOMD71	3104 06 00 52	P3TKA00CBJ
3786913	EV42LOMDCF	3104 06 04	P3TKA00DA
3786914	EV42LREDCF	3104 06 08	P3TKA00DA
3786915	EV42LVITOMDCF	3104 08 00	P3TKA00DM
3786916	EV42ZL71	3104 08 00 52	P3TKA00DM
3786917	EV42ZLCF	3104 08 04	P3TKA00ES9A
3786918	EV42ZLREDCF	3104 08 06	P3TKA00ES9A
3786919	EV6-1/4B	3104 08 10	P3TKA00ES9C
3786920	EV6-1/8B	3104 10 00	P3TKA00ES9C
3786924	EVGE06LMED71	3104 10 04	P3TKA00ES9D
3786935	EVGE06LMEDCF	3104 10 08	P3TKA00ES9D
3786963	EVGE06LMEDMS	3104 10 12	P3TKA00ES9K
3786986	EVGE06LR1/4EDCF	3104 12 00	P3TKA00ES9K
3787019	EVGE06LRED71	3104 12 04	P3TKA00ESAC
3787027	EVGE06LREDCF	3104 12 10	P3TKA00ESAC

3787032	EVGE06LREDMS	3104 14 00	P3TKA00ESAD
3787033	EVGE06SMEDCF	3104 14 08	P3TKA00ESAD
3787035	EVGE06SRED71	3104 16 00	P3TKA00ESAE
3787036	EVGE06SREDCF	3104 16 12	P3TKA00ESAE
3787057	EVGE08LMED71	3104 53 00	P3TKA00ESCC
3787067	EVGE08LMEDCF	3104 56 00	P3TKA00ESCC
3787080	EVGE08LRED71	3104 60 00	P3TKA00ESCE
3787084	EVGE08LREDCF	3104 60 56	P3TKA00ESCE
3787107	EVGE08LREDMS	3104 60 62	P3TKA00JA1
3787114	EVGE08LREDVITCF	3104 62 00	P3TKA00JA1
3787117	EVGE08SMEDCF	3104 62 60	P3TKA00JA7
3787126	EVGE08SRED71	310-5N-NC-WD3S-16	P3TKA00JA7
3787140	EVGE08SREDCF	3106 03 00	P3TKA00MWA
3787141	EVGE08SREDEPDMCF	3106 03 04	P3TKA00MWA
3787142	EVGE08SREDMS	3106 04 00	P3TKA00MWB
3787146	EVGE10L1/4NPTCF	3106 04 00 52	P3TKA00MWB
3787182	EVGE10LMED71	3106 04 06	P3TKA00MWJ
3787184	EVGE10LMEDCF	3106 04 06 52	P3TKA00MWJ
3787187	EVGE10LR3/8ED71	3106 04 08	P3TKA00RQ
3787190	EVGE10LR3/8EDCF	3106 04 56	P3TKA00RQ
3787201	EVGE10LRED71	3106 05 00	P3XAA14GEANGPNW
3787202	EVGE10LREDCF	3106 06 00	P3XAA14GEANGPNW
3787203	EVGE10LREDMS	3106 06 00 52	P3XAA14GECNGPNW
3787204	EVGE10LREDVITCF	3106 06 08	P3XAA14GECNGPNW
3787207	EVGE10SMEDCF	3106 06 08 52	P3XAA14GECNGSNW
3787218	EVGE10SRED71	3106 06 10	P3XAA14GECNGSNW
3787219	EVGE10SREDCF	3106 06 56	P3XAA16GEANGPNW
3787249	EVGE10SREDDPR71CF	3106 08 00	P3XAA16GEANGPNW
3787259	EVGE10SREDMS	3106 08 00 52	P3XAA16GECNGPNW
3787272	EVGE12L1/2NPT71	3106 08 10	P3XAA16GECNGPNW
3787276	EVGE12L1/4NPT71	3106 08 12	P3XAA16GECNGSNW
3787291	EVGE12LMED71	3106 10 00	P3XAA16GECNGSNW
3787294	EVGE12LMEDCF	3106 10 12	P3XAN14GEANGW
3787308	EVGE12LR1/2ED71	3106 12 00	P3XAN14GEANGW
3787340	EVGE12LR1/2EDCF	3106 12 14	P3XAN14GECNGW
3787370	EVGE12LR1/4ED71	3106 12 16	P3XAN14GECNGW
3787381	EVGE12LR1/4EDCF	3106 14 00	P3XAN16GEANGW
3787404	EVGE12LR1/4EDVITCF	3106 16 00	P3XAN16GEANGW
3787423	EVGE12LR71	3106 53 00	P3XAN16GECNGW
3787424	EVGE12LRCF	3106 53 04	P3XAN16GECNGW
3787429	EVGE12LRED71	3106 53 56	P3XCA/A00007
3787461	EVGE12LREDCF	3106 55 00	P3XCA/A00007
3787462	EVGE12LREDMS	3106 56 00	P3XCA/A00008
3787463	EVGE12LREDVITCF	3106 56 08	P3XCA/A00008
3787488	EVGE12S1/2NPT71	3106 60 00	P3XCA/A00009
3787494	EVGE12S3/8NPT71	3106 60 10	P3XCA/A00009
3787495	EVGE12SMEDCF	3106 60 56	P3XCA14GEANGPNW
3787496	EVGE12SR1/2ED71	3106 60 62	P3XCA14GEANGPNW
3787497	EVGE12SR1/2EDCF	3106 62 00	P3XCA14GEANJPNW
3787526	EVGE12SRED71	3107 04 00	P3XCA14GEANJPNW
3787539	EVGE12SREDCF	3107 04 06	P3XCA14GECNGPNW
3787548	EVGE14SMEDCF	3107 06 00	P3XCA14GECNGPNW
3787564	EVGE14SRED71	3107 06 04	P3XCA14GECNJPNW

3787580	EVGE14SREDCF	3107 06 08	P3XCA14GECNJPNW
3787601	EVGE15LM22X1.5EDCF	3107 08 00	P3XCA14GGCNGPNW
3787638	EVGE15LMED71	3107 08 06	P3XCA14GGCNGPNW
3787647	EVGE15LMEDCF	3107-16-12	P3XCA14GGCNGSNW
3787648	EVGE15LR1/2KEGMS	3107-16-16	P3XCA14GGCNGSNW
3787673	EVGE15LRCF	3107-20-20	P3XCA16GEANGPNW
3787702	EVGE15LRED71	3107-24-24	P3XCA16GEANGPNW
3787717	EVGE15LREDCF	3107-32-32	P3XCA16GEANJPNW
3787721	EVGE15LREDMS	3108 04 10	P3XCA16GEANJPNW
3787722	EVGE16S1/2NPT71	3108 04 13	P3XCA16GECNGPNW
3787725	EVGE16SMED71	3108 06 10	P3XCA16GECNGPNW
3787726	EVGE16SMEDCF	3108 06 11	P3XCA16GGCNGPNW
3787727	EVGE16SR3/4ED71	3108 06 13	P3XCA16GGCNGPNW
3787729	EVGE16SR3/4EDCF	3108 06 14	P3XCA16GGCNGSNW
3787730	EVGE16SRED71	3108 08 10	P3XCA16GGCNGSNW
3787731	EVGE16SREDCF	3108 08 13	P3XCB14GECNGPNW
3787733	EVGE16SREDEPDMCF	3108 08 17	P3XCB14GECNGPNW
3787734	EVGE16SREDVITCF	3108 10 13	P3XDA14SCN0000
3787739	EVGE18LMED71	3108 10 17	P3XDA14SCN0000
3787744	EVGE18LMEDCF	3108 10 21	P3XDA14SCNB2CN
3787745	EVGE18LR71	3108 12 13	P3XDA14SCNB2CN
3787790	EVGE18LRCF	3108 12 17	P3XDA16SCN0000
3787792	EVGE18LRED71	3108 12 21	P3XDA16SCN0000
3787793	EVGE18LREDCF	3108 14 17	P3XDA16SCNB2CN
3787794	EVGE18LREDMS	3108 14 21	P3XDA16SCNB2CN
3787796	EVGE20SMEDCF	3108 16 17	P3XEA14EGABANN
3787797	EVGE20SR1/2EDCF	3108 16 21	P3XEA14EGABANN
3787798	EVGE20SRED71	3108 56 11	P3XEA14EGABNGN
3787799	EVGE20SREDCF	3108 56 14	P3XEA14EGABNGN
3787800	EVGE20SREDEPDMCF	3108 60 14	P3XEA14EGABNJN
3787801	EVGE22LMED71	3109 04 10	P3XEA14EGABNJN
3787802	EVGE22LMEDCF	3109 04 11	P3XEA14EGABNLN
3787805	EVGE22LR1/2EDCF	3109 04 13	P3XEA14EGABNLN
3787834	EVGE22LR1/2EDVITCF	3109 04 14	P3XEA14EGABNMN
3787843	EVGE22LR3/4KEGMS	3109 04 17	P3XEA14EGABNMN
3787847	EVGE22LR71	3109 04 20	P3XEA14EGABNNN
3787848	EVGE22LRCF	3109 05 10	P3XEA14EGABNNN
3787858	EVGE22LRED71	3109 06 10	P3XEA14EGCBAGN
3787861	EVGE22LREDCF	3109 06 11	P3XEA14EGCBAGN
3787862	EVGE22LREDMS	3109 06 13	P3XEA14EGCBNGN
3787863	EVGE22LREDVITCF	3109 06 14	P3XEA14EGCBNGN
3787867	EVGE25S1NPT71	3109 06 17	P3XEA14EGCBNHN
3787893	EVGE25SMED71	3109 06 21	P3XEA14EGCBNHN
3787894	EVGE25SMEDCF	3109 08 10	P3XEA14EGCBNJN
3787912	EVGE25SRED71	3109 08 10 52	P3XEA14EGCBNJN
3787914	EVGE25SREDCF	3109 08 13	P3XEA14EGCBNLN
3787929	EVGE25SREDMS	3109 08 14	P3XEA14EGCBNLN
3787930	EVGE28LMEDCF	3109 08 17	P3XEA14EGCBNMN
3787933	EVGE28LR3/4EDCF	3109 08 21	P3XEA14EGCBNMN
3787934	EVGE28LR71	3109 10 10	P3XEA14EGCBNNN
3787936	EVGE28LRCF	3109 10 13	P3XEA14EGCBNNN
3787939	EVGE28LRED71	3109 10 14	P3XEA14GGABNHN
3787941	EVGE28LREDCF	3109 10 17	P3XEA14GGABNHN

3787942	EVGE28LREDDPR71CF	3109 10 18	P3XEA14GGABNNN
3787945	EVGE28LREDMS	3109 10 21	P3XEA14GGABNNN
3788015	EVGE28LREDVITCF	3109 10 22	P3XEA14GGCBNGN
3788017	EVGE30SMEDCF	3109 12 13	P3XEA14GGCBNGN
3788026	EVGE30SRED71	3109 12 17	P3XEA14GGCBNJN
3788045	EVGE30SREDCF	3109 12 18	P3XEA14GGCBNJN
3788091	EVGE35LR1EDCF	3109 12 21	P3XEA14GGCBNNN
3788101	EVGE35LRED71	3109 12 22	P3XEA14GGCBNNN
3788103	EVGE35LREDCF	3109 14 17	P3XEA16EGABNGN
3788106	EVGE35LREDVITCF	3109 14 21	P3XEA16EGABNGN
3788119	EVGE38SMEDCF	3109 16 17	P3XEA16EGABNHN
3788125	EVGE38SRED71	3109 16 21	P3XEA16EGABNHN
3788131	EVGE38SREDCF	3109 53 11	P3XEA16EGABNJN
3788144	EVGE42LMEDCF	3109 53 20	P3XEA16EGABNJN
3788146	EVGE42LRED71	3109 56 10	P3XEA16EGABNLN
3788147	EVGE42LREDCF	3109 56 11	P3XEA16EGABNLN
3788183	EVGE42LREDMS	3109 56 14	P3XEA16EGABNMN
3788186	EVL06L71	3109 56 18	P3XEA16EGABNMN
3788193	EVL06LCF	3109 60 11	P3XEA16EGABNNN
3788203	EVL06LMCF	3109 60 13	P3XEA16EGABNNN
3788204	EVL06LMS	3109 60 14	P3XEA16EGCBNGN
3788205	EVL06LOMD71	3109 60 17	P3XEA16EGCBNGN
3788210	EVL06LOMDCF	3109 60 18	P3XEA16EGCBNHN
3788253	EVL06LOMDMS	3109 60 22	P3XEA16EGCBNHN
3788269	EVL06LR71	3109 62 13	P3XEA16EGCBNJN
3788301	EVL06LRCF	3109 62 18	P3XEA16EGCBNJN
3788316	EVL06S71	3109 62 22	P3XEA16EGCBNLN
3788357	EVL06SCF	3110 04 00	P3XEA16EGCBNLN
3788391	EVL06SOMD71	3110 04 02	P3XEA16EGCBNMN
3788406	EVL06SOMDCF	3110 04 03	P3XEA16EGCBNMN
3788437	EVL06SR71	3110 04 04	P3XEA16GGABNGN
3788546	EVL06SRCF	3110 04 05	P3XEA16GGABNGN
3788552	EVL08L71	3110 06 00	P3XEA16GGABNHN
3788554	EVL08LCF	3110 06 02	P3XEA16GGABNHN
3788622	EVL08LMCF	3110 06 03	P3XEA16GGABNJN
3788623	EVL08LMS	3110 06 04	P3XEA16GGABNJN
3788628	EVL08LOMD71	3110 06 05	P3XEA16GGABNNN
3788642	EVL08LOMDCF	3110 08 00	P3XEA16GGABNNN
3788644	EVL08LR71	3110 08 02	P3XEA16GGCBNGN
3788645	EVL08LRCF	3110 08 03	P3XEA16GGCBNGN
3788656	EVL08LRMS	3110 08 04	P3XEA16GGCBNHN
3788663	EVL08LROMDCF	3110 08 05	P3XEA16GGCBNHN
3788753	EVL08S71	3110 10 00	P3XEA16GGCBNJN
3788807	EVL08SCF	3110 10 02	P3XEA16GGCBNJN
3788809	EVL08SCFX	3110 10 03	P3XEA16GGCBNNN
3788816	EVL08SOMD71	3110 10 04	P3XEA16GGCBNNN
3788824	EVL08SOMDCF	3110 10 05	P3XFA142GCN
3788825	EVL08SR71	3110 12 00	P3XFA142GCN
3788829	EVL08SRCF	3110 12 02	P3XFA14AGCN
3788834	EVL10L71	3110 12 03	P3XFA14AGCN
3788835	EVL10LCF	3110 12 04	P3XFA14DGAN
3788881	EVL10LMCF	3110 12 05	P3XFA14DGAN
3788941	EVL10LMS	3110 14 00	P3XFA14DGCN

3789003	EVL10LOMD71	3110 14 02	P3XFA14DGCN
3789137	EVL10LOMDCF	3110 14 03	P3XFA14EGAN
3789155	EVL10LOMDMS	3110 14 04	P3XFA14EGAN
3789171	EVL10LR71	3110 56 02	P3XFA14EGCN
3789177	EVL10LRCF	3110-2472	P3XFA14EGCN
3789181	EVL10LROMDCF	311-19082-2	P3XFA14GGAN
3789200	EVL10S71	3112 04 10	P3XFA14GGAN
3789210	EVL10SCF	3112 04 13	P3XFA14GGCN
3789217	EVL10SOMD71	3112 06 10	P3XFA14GGCN
3789218	EVL10SOMDCF	3112 06 13	P3XFA16AGCN
3789219	EVL10SR71	3113 04 10	P3XFA16AGCN
3789242	EVL10SRCF	3113 06 10	P3XFA16DGAN
3789309	EVL12L71	3113 06 13	P3XFA16DGAN
3789445	EVL12LCF	3113 08 10	P3XFA16DGCN
3789535	EVL12LDPR71CF	3113 08 13	P3XFA16DGCN
3789552	EVL12LMCF	3113 08 17	P3XFA16EGAN
3789587	EVL12LMS	3113 10 13	P3XFA16EGAN
3789590	EVL12LOMD71	3113 10 17	P3XFA16EGCN
3789634	EVL12LOMDCF	3113 10 21	P3XFA16EGCN
3789636	EVL12LOMDMS	3113 12 13	P3XFA16GGAN
3789684	EVL12LR71	3113 12 17	P3XFA16GGAN
3789755	EVL12LRCF	3113 12 21	P3XJA14CA1N
3789763	EVL12LRDPR71CF	3114 04 10	P3XJA14CA1N
3791500	EVL12S71	3114 04 13	P3XJA14CB1N
3791502	EVL12SCF	3114 04 19	P3XJA14CB1N
3791511	EVL12SOMD71	3114 06 10	P3XJA14CC1N
3791513	EVL12SOMDCF	3114 06 13	P3XJA14CC1N
3791530	EVL12SR71	3114 08 10	P3XJA14CD1N
3791572	EVL12SRCF	3114 08 10 52	P3XJA14CD1N
3791573	EVL14S71	3114 08 13	P3XJA14CD2N
3791576	EVL14SCF	3114 08 17	P3XJA14CD2N
3791577	EVL14SMCF	3114 10 13	P3XJA14CE1N
3791587	EVL14SOMDCF	3114 10 17	P3XJA14CE1N
3791589	EVL14SRCF	3114 10 21	P3XJA14CF1N
3791598	EVL15L71	3114 12 17	P3XJA14CF1N
3791725	EVL15LCF	3114 12 21	P3XKA00AS
3791753	EVL15LMCF	3114 14 17	P3XKA00AS
3791763	EVL15LMS	3114 16 21	P3XKA00BSA
3791767	EVL15LOMD71	3116 00 00 07	P3XKA00BSA
3791772	EVL15LOMDCF	3116 00 00 22	P3XKA00BSC
3791799	EVL15LOMDMS	3116 00 00 23	P3XKA00BSC
3791820	EVL15LRCF	3116 04 00	P3XKA00BSN
3791851	EVL15LROMDCF	3116 06 00	P3XKA00BSN
3791854	EVL16S71	3116 06 00 52	P3XKA00CB
3791882	EVL16SCF	3116 08 00	P3XKA00CB
3791911	EVL16SM71	3116 08 00 52	P3XKA00ES9
3791912	EVL16SMCF	3116 10 00	P3XKA00ES9
3791925	EVL16SOMD71	3116 12 00	P3XKA00ESA
3791927	EVL16SOMDCF	3116 14 00	P3XKA00ESA
3791954	EVL16SRCF	3116 60 00	P3XKA00ESC
3791963	EVL16SROMDCF	311-60012-2	P3XKA00ESC
3791964	EVL18L71	311-60042-8	P3XKA00ESE
3791965	EVL18LCF	311-60053-8	P3XKA00ESE

3791993	EVL18LMCF	3118 03 09	P3XKA00ESG
3792037	EVL18LMS	3118 03 19	P3XKA00ESG
3792077	EVL18LOMD71	3118 04 10	P3XKA00MM
3792151	EVL18LOMDCF	3118 04 10 52	P3XKA00MM
3792172	EVL18LR71	3118 04 19	P3XKA00MW
3792173	EVL18LRCF	3118 04 19 52	P3XKA00MW
3792179	EVL20S71	3118 06 10	P3XKA00MWD
3792207	EVL20SCF	3118 06 10 52	P3XKA00MWD
3792216	EVL20SM71	3118 06 13	P3XKA00PL
3792249	EVL20SMCF	3118 06 13 52	P3XKA00PL
3792263	EVL20SOMD71	3118 06 19	P3XKA00PPA
3792319	EVL20SOMDCF	3118 08 10	P3XKA00PPA
3792348	EVL20SRCF	3118 08 10 52	P3XKA00RN
3792367	EVL22L71	3118 08 13	P3XKA00RN
3792387	EVL22LCF	3118 08 13 52	P3XKA00RQ
3792411	EVL22LMCF	3118 08 17	P3XKA00RQ
3792432	EVL22LMS	3118 08 60	P3XKA00RR
3792452	EVL22LOMD71	3118 10 13	P3XKA00RR
3792773	EVL22LOMDCF	3118 10 13 52	P3XKA04CY
3792811	EVL22LR71	3118 10 17	P3XKA04CY
3792812	EVL22LRCF	3118 10 21	P3XLA14PGNN
3792834	EVL22LREDCF	3118 12 13	P3XLA14PGNN
3792875	EVL25S71	3118 12 17	P3XLA14SGNN
3792877	EVL25SCF	3118 12 21	P3XLA14SGNN
3792893	EVL25SMCF	3118FIL	P3XLA16PGNN
3792896	EVL25SOMD71	3118FIL	P3XLA16PGNN
3792909	EVL25SOMDCF	3119 04 10	P3XLA16SGNN
3792912	EVL25SRCF	3119 04 19	P3XLA16SGNN
3792913	EVL28L71	3119 06 10	P3XMA160N
3792936	EVL28LCF	3119 06 10 52	P3XMA160N
3792937	EVL28LMS	3119 06 13	P3XMA1V0N
3793059	EVL28LOMD71	3119 08 13	P3XMA1V0N
3793065	EVL28LOMDCF	3119 08 17	P3XPA14BD2AA2A
3793070	EVL28LR71	3119 10 17	P3XPA14BD2AA2A
3793130	EVL28LRCF	3119FIL	P3XPA14BD2VA2A
3793146	EVL28LREDCF	3119FIL	P3XPA14BD2VA2A
3793183	EVL30S71	3120 04 00	P3XPA14CD2VA2A
3793185	EVL30SCF	3120 04 00 85	P3XPA14CD2VA2A
3793188	EVL30SOMD71	3120 06 00	P3XPA16BD2VA2A
3793192	EVL30SOMDCF	3120 06 00 85	P3XPA16BD2VA2A
3793196	EVL30SRCF	3120 08 00	P3XRA14BAGN
3793280	EVL35L71	3120 08 00 85	P3XRA14BAGN
3793281	EVL35LCF	3120 10 00	P3XRA14BAHN
3793296	EVL35LMCF	3120 10 00 85	P3XRA14BAHN
3793303	EVL35LOMD71	3120 12 00	P3XRA14BAJN
3793306	EVL35LOMDCF	3120 12 00 85	P3XRA14BAJN
3793356	EVL35LR71	3120 14 00	P3XRA14BALN
3793398	EVL35LRCF	3120 14 00 85	P3XRA14BALN
3793433	EVL35LREDCF	312-00006-8	P3XRA14BAMN
3793438	EVL38S71	312-00007-8	P3XRA14BAMN
3793440	EVL38SCF	3120-1477	P3XRA14BANN
3793447	EVL38SOMD71	3120-1885	P3XRA14BANN
3793456	EVL38SOMDCF	3120-2472	P3XRA14BNGN

3793493	EVL42L71	312-09041-0	P3XRA14BNGN
3793495	EVL42LCF	3121 04 10	P3XRA14BNHN
3793497	EVL42LOMD71	3121 04 13	P3XRA14BNHN
3793499	EVL42LOMDCF	3121 06 10	P3XRA14BNJN
3793510	EVL42LR71	3121 06 13	P3XRA14BNJN
3793531	EVL42LRCF	3121 08 10	P3XRA14BNLN
3793532	EVM32-II	3121 08 13	P3XRA14BNLN
3793563	EVSA064A061	3121 08 17	P3XRA14BNMN
3793572	EVSA064A061Z	3121 10 13	P3XRA14BNMN
3793573	EVSA064A101	3121 10 17	P3XRA14BNNN
3793577	EVSA064A101Z	3121 10 21	P3XRA14BNNN
3793578	EVSA160A061	3121 12 17	P3XRA14NNNN
3793583	EVSA160A061Z	3121 12 21	P3XRA14NNNN
3793600	EVSA160A101	3121 14 21	P3XRA16BAGN
3793602	EVSA315A061	312-13200-0	P3XRA16BAGN
3793607	EVSA315A061Z	3122 04 05	P3XRA16BAHN
3793616	EVSA315A101	3122 04 53	P3XRA16BAHN
3793617	EVSA315A101Z	3122 06 05	P3XRA16BAJN
3793618	EVT06L71	3122 08 08	P3XRA16BAJN
3793619	EVT06LCF	3122 08 56	P3XRA16BALN
3793620	EVT06LMCF	3122 10 08	P3XRA16BALN
3793622	EVT06LMS	3122 10 56	P3XRA16BAMN
3793623	EVT06LOMD71	3122 12 08	P3XRA16BAMN
3793624	EVT06LOMDCF	3122 12 10	P3XRA16BANN
3793625	EVT06LOMDMS	3122 12 62	P3XRA16BANN
3793626	EVT06LR71	3122 14 14	P3XRA16BNGN
3793628	EVT06LRCF	3122 14 62	P3XRA16BNGN
3793629	EVT06S71	3122A10 08	P3XRA16BNHN
3793630	EVT06SCF	3122FIL	P3XRA16BNHN
3793631	EVT06SOMD71	3122FIL	P3XRA16BNJN
3793632	EVT06SOMDCF	312-35051-0	P3XRA16BNJN
3793634	EVT06SOMDCFVOL	3124 04 10	P3XRA16BNLN
3793635	EVT06SRCF	3124 04 19	P3XRA16BNLN
3793636	EVT08L71	3124 06 13	P3XRA16BNMN
3793637	EVT08LCF	3124 08 17	P3XRA16BNMN
3793638	EVT08LMCF	3126 03 00	P3XRA16BNNN
3793701	EVT08LMS	3126 04 00	P3XRA16BNNN
3793722	EVT08LOMD71	3126 04 00 52	P3XRA94BANN
3793747	EVT08LOMDCF	3126 05 00	P3XRA94BANN
3793753	EVT08LOMDMS	3126 06 00	P3XTA14PPN
3794013	EVT08LR71	3126 06 00 52	P3XTA14PPN
3794025	EVT08LRCF	3126 08 00	P3XTA14SCN0000
3794026	EVT08LRMS	3126 08 00 52	P3XTA14SCN0000
3794030	EVT08S71	3126 10 00	P3XTA14SCNA2CN
3794036	EVT08SCF	3126 10 00 52	P3XTA14SCNA2CN
3794037	EVT08SMCF	3126 12 00	P3XTA14SCNB2CN
3794038	EVT08SOMD71	3126 14 00	P3XTA14SCNB2CN
3794040	EVT08SOMDCF	3126 16 00	P3XTA14SCND2CN
3794041	EVT08SOMDMS	3126 53 00	P3XTA14SCND2CN
3794047	EVT08SR71	3126 56 00	P3XTA14SCNE2CN
3794064	EVT08SRCF	3126 60 00	P3XTA14SCNE2CN
3794086	EVT10L71	3126 62 00	P3XTA16PPN
3794264	EVT10LCF	3129 04 10	P3XTA16PPN

3794268	EVT10LMCF	3129 04 13	P3XTA16SCN0000
3794308	EVT10LMS	3129 06 10	P3XTA16SCN0000
3794330	EVT10LOMD71	3129 06 13	P3XTA16SCNA2CN
3794369	EVT10LOMDCF	3129 08 10	P3XTA16SCNA2CN
3794372	EVT10LOMDMS	3129 08 13	P3XTA16SCNB2CN
3794379	EVT10LOMDVOLCF	3129 08 17	P3XTA16SCNB2CN
3794413	EVT10LR71	3129 10 13	P3XTA16SCND2CN
3794420	EVT10LRCF	3129 10 17	P3XTA16SCND2CN
3794556	EVT10LRMS	3129 10 21	P3XTA16SCNE2CN
3794620	EVT10LROMDCF	3129 12 13	P3XTA16SCNE2CN
3794629	EVT10S71	3129 12 17	P3XVA14LSN
3794686	EVT10SCF	3129 12 21	P3XVA14LSN
3794755	EVT10SOMD71	3129 14 17	P3XVA16LSN
3794766	EVT10SOMDCF	3129 14 21	P3XVA16LSN
3794779	EVT10SR71	3129 56 14	P3YCA/A00001
3794781	EVT10SRCF	3130 04 01	P3YCA/A00001
3794782	EVT12L71	3130 04 02	P3YCA/A00002
3794783	EVT12LCF	3130 04 03	P3YCA/A00002
3794784	EVT12LM71	3130 04 04	P3YCA16SGANFLNF
3794785	EVT12LMCF	3130 04 05	P3YCA16SGANFLNF
3794840	EVT12LMS	3130 04 10	P3YCA16SGCNFLNF
3794856	EVT12LOMD71	3130 06 01	P3YCA16SGCNFLNF
3794858	EVT12LOMDCF	3130 06 02	P3YCA18SGCNFLNF
3794866	EVT12LOMDZNFE3T	3130 06 03	P3YCA18SGCNFLNF
3794867	EVT12LR71	3130 06 04	P3YCB16SGANFLNF
3794868	EVT12LRCF	3130 06 05	P3YCB16SGANFLNF
3794869	EVT12LROMD71	3130 06 10	P3YCB16SGCNFLNF
3794896	EVT12S71	3130 08 01	P3YCB16SGCNFLNF
3794905	EVT12SCF	3130 08 02	P3YCB18SGANFLNF
3794932	EVT12SOMD71	3130 08 03	P3YCB18SGANFLNF
3795088	EVT12SOMDCF	3130 08 04	P3YCB18SGCNFLNF
3795135	EVT12SR71	3130 08 05	P3YCB18SGCNFLNF
3795140	EVT12SRCF	3130 08 10	P3YCB98SGANFLNF
3795184	EVT14SCF	3130 10 01	P3YCB98SGANFLNF
3795185	EVT14SMCF	3130 10 02	P3YDA18SCN0000
3795186	EVT14SOMDCF	3130 10 03	P3YDA18SCN0000
3795187	EVT15L71	3130 10 04	P3YEA16ESABAEN
3795188	EVT15LCF	3130 10 05	P3YEA16ESABAEN
3795189	EVT15LMCF	3130 10 10	P3YEA16ESABNEN
3795192	EVT15LMS	3130 12 01	P3YEA16ESABNEN
3795197	EVT15LOMD71	3130 12 02	P3YEA16ESABNFN
3795204	EVT15LOMDCF	3130 12 03	P3YEA16ESABNFN
3795259	EVT15LR71	3130 12 04	P3YEA16ESABNHN
3795286	EVT15LRCF	3130 12 05	P3YEA16ESABNHN
3795298	EVT16S71	3130 12 10	P3YEA16ESABNJN
3795313	EVT16SCF	3130 56 03	P3YEA16ESABNJN
3795318	EVT16SOMD71	3130 56 04	P3YEA16ESCBNEN
3795323	EVT16SOMDCF	3130 56 10	P3YEA16ESCBNEN
3795372	EVT16SR71	3130 60 03	P3YEA16ESCBNFN
3795402	EVT16SRCF	3130 60 04	P3YEA16ESCBNFN
3795432	EVT18L71	3130 60 10	P3YEA16ESCBNHN
3795434	EVT18LCF	3130 62 03	P3YEA16ESCBNHN
3795436	EVT18LMCF	3130 62 10	P3YEA16ESCBNJN

3795440	EVT18LMS	3130-1477	P3YEA16ESCBNJN
3795465	EVT18LOMD71	3131 04 10	P3YEA16GSABNEN
3795486	EVT18LOMDCF	3131 04 13	P3YEA16GSABNEN
3795511	EVT18LR71	3131 04 19	P3YEA16GSABNFN
3795522	EVT18LRCF	3131 06 10	P3YEA16GSABNFN
3795538	EVT20S71	3131 06 13	P3YEA16GSABNHN
3795576	EVT20SCF	3131 08 10	P3YEA16GSABNHN
3795584	EVT20SMCF	3131 08 13	P3YEA16GSABNJN
3795603	EVT20SOMD71	3131 08 17	P3YEA16GSABNJN
3795620	EVT20SOMDCF	3131 10 13	P3YEA16GSCBNFN
3795623	EVT20SR71	3131 10 17	P3YEA16GSCBNFN
3795652	EVT20SRCF	3131 10 21	P3YEA16GSCBNJN
3795666	EVT22L71	3131 12 17	P3YEA16GSCBNJN
3795667	EVT22LCF	3131 12 21	P3YEA18ESABNEN
3795673	EVT22LOMD71	3131 14 17	P3YEA18ESABNEN
3795676	EVT22LOMDCF	3131 14 21	P3YEA18ESABNFN
3795720	EVT22LR71	3132 04 10	P3YEA18ESABNFN
3795756	EVT22LRCF	3132 04 13	P3YEA18ESABNHN
3795790	EVT25S71	3132 06 10	P3YEA18ESABNHN
3795831	EVT25SCF	3132 06 13	P3YEA18ESABNJN
3795832	EVT25SOMD71	3133 04 10	P3YEA18ESABNJN
3795833	EVT25SOMDCF	3133 04 19	P3YEA18ESCBNEN
3795856	EVT25SR71	3133 06 10	P3YEA18ESCBNEN
3796039	EVT25SRCF	3133 06 13	P3YEA18ESCBNFN
3796047	EVT28L71	3133 06 19	P3YEA18ESCBNFN
3796077	EVT28LCF	3133 08 10	P3YEA18ESCBNHN
3796078	EVT28LMS	3133 08 13	P3YEA18ESCBNHN
3796080	EVT28LOMD71	3133 08 17	P3YEA18ESCBNJN
3796083	EVT28LOMDCF	3133 10 13	P3YEA18ESCBNJN
3796087	EVT28LR71	3133 10 17	P3YEA18GSABNEN
3796088	EVT28LRCF	3133 10 21	P3YEA18GSABNEN
3796089	EVT30S71	3133 12 13	P3YEA18GSABNFN
3796091	EVT30SCF	3133 12 17	P3YEA18GSABNFN
3796092	EVT30SOMD71	3133 12 21	P3YEA18GSABNHN
3796107	EVT30SOMDCF	3136 04 10	P3YEA18GSABNHN
3796131	EVT30SR71	3136 04 13	P3YEA18GSABNJN
3796154	EVT35L71	3136 06 10	P3YEA18GSABNJN
3796157	EVT35LCF	3136 06 13	P3YEA18GSCBNEN
3796159	EVT35LOMDCF	3136 06 17	P3YEA18GSCBNEN
3796182	EVT35LR71	3136 08 10	P3YEA18GSCBNFN
3796200	EVT35LREDCF	3136 08 13	P3YEA18GSCBNFN
3796201	EVT38SCF	3136 10 17	P3YEA18GSCBNHN
3796235	EVT38SOMDCF	3136 12 17	P3YEA18GSCBNHN
3796342	EVT38SRCF	3136 12 21	P3YEA18GSCRNEN
3796381	EVT42L71	3136 16 17	P3YEA18GSCRNEN
3796388	EVT42LCF	3136 16 21	P3YEA98ESCBNEN
3796389	EVT42LOMDCF	31382-12-12	P3YEA98ESCBNEN
3796406	EVT42LR71	31382-4-4	P3YFA162SAN
3796439	EVT42LRCF	31382-6-6	P3YFA162SAN
3796440	EVW06L71	31382-8-8	P3YFA162SCN
3796463	EVW06LCF	3139 04 00	P3YFA162SCN
3796540	EVW06LM71	3139 06 00	P3YFA16ASCN
3796541	EVW06LMCF	3139 08 00	P3YFA16ASCN

3796557	EVW06LMOMDCF	3139 10 00	P3YFA16DSAN
3796560	EVW06LMS	3139 12 00	P3YFA16DSAN
3796600	EVW06LOMD71	3139 14 00	P3YFA16DSCN
3796601	EVW06LOMDCF	3139 56 00	P3YFA16DSCN
3796603	EVW06LOMDMS	3140 04 00	P3YFA16ESAN
3796639	EVW06LR71	3140 04 00 52	P3YFA16ESAN
3796655	EVW06LRCF	3140 04 06	P3YFA16ESCN
3796673	EVW06LRMS	3140 06 00	P3YFA16ESCN
3796799	EVW06LROMDCF	3140 06 00 52	P3YFA16GSAN
3796845	EVW06LRSPH71	3140 06 08	P3YFA16GSAN
3796926	EVW06S71	3140 08 00	P3YFA16GSCN
3796927	EVW06SCF	3140 08 00 30	P3YFA16GSCN
3796929	EVW06SM71	3140 08 00 52	P3YFA182SAN
3797031	EVW06SOMD71	3140 08 10	P3YFA182SAN
3797032	EVW06SOMDCF	3140 08 12	P3YFA182SCN
3797033	EVW06SR71	3140 10 00	P3YFA182SCN
3797065	EVW06SRCF	3140 10 12	P3YFA18ASCN
3797109	EVW06SROMDCF	3140 12 00	P3YFA18ASCN
3797111	EVW08L71	3140 53 00	P3YFA18DSAN
3797112	EVW08LCF	3140 56 00	P3YFA18DSAN
3797117	EVW08LM71	3140 60 00	P3YFA18DSCN
3797118	EVW08LMCF	3140-1477	P3YFA18DSCN
3797125	EVW08LMS	3140-4333	P3YFA18ESAN
3797126	EVW08LOMD71	3140A06 00	P3YFA18ESAN
3797156	EVW08LOMDCF	3142 00 00 08	P3YFA18ESCN
3797194	EVW08LOMDMS	3142 04 00	P3YFA18ESCN
3797195	EVW08LR71	3142 04 06	P3YFA18GSAN
3797255	EVW08LRCF	3142 06 00	P3YFA18GSAN
3797265	EVW08LREDCF	3142 06 08	P3YFA18GSCN
3797298	EVW08LRMS	3142 08 00	P3YFA18GSCN
3797339	EVW08LROMDCF	3142 08 10	P3YFA96GSAN
3797401	EVW08S71	3142 10 00	P3YFA96GSAN
3797404	EVW08SCF	3142 10 12	P3YFA98GSAN
3797411	EVW08SM71	3142 12 00	P3YFA98GSAN
3797412	EVW08SMOMDCF	3143 04 06	P3YKA00BSA
3797413	EVW08SMS	3143 04 08	P3YKA00BSA
3797414	EVW08SOMD71	3143 06 08	P3YKA00BSC
3797421	EVW08SOMDCF	3144 04 04	P3YKA00BSC
3797422	EVW08SR71	3144 04 06	P3YKA00BSN
3797423	EVW08SRCF	3144 06 06	P3YKA00BSN
3797424	EVW08SREDCF	3144 06 08	P3YKA00CB
3797484	EVW08SROMDCF	3146 04 00	P3YKA00CB
3797572	EVW10L71	3146 06 00	P3YKA00CW
3797573	EVW10LCF	3146 08 00	P3YKA00CW
3797690	EVW10LDPR71CF	3146 10 00	P3YKA00ES9
3797719	EVW10LM71	3146 12 00	P3YKA00ES9
3797737	EVW10LMCF	3146 14 00	P3YKA00ESA
3797744	EVW10LMOMDCF	3148 04 10	P3YKA00ESA
3797745	EVW10LMS	3148 04 13	P3YKA00ESE
3797795	EVW10LOMD71	3148 06 10	P3YKA00ESE
3797825	EVW10LOMDCF	3148 06 13	P3YKA00ESG
3797831	EVW10LOMDMS	3148 08 10	P3YKA00ESG
3797832	EVW10LR71	3148 08 13	P3YKA00MM

3797848	EVW10LRCF	3148 08 17	P3YKA00MM
3797880	EVW10LREDCF	3148 10 13	P3YKA00MS
3797911	EVW10LRMS	3148 10 17	P3YKA00MS
3797953	EVW10LROMD71	3148 10 21	P3YKA00PH
3797957	EVW10LROMDCF	3148 12 17	P3YKA00PH
3797962	EVW10S71	3148 12 21	P3YKA00PL
3797965	EVW10SCF	3149 04 10	P3YKA00PL
3797989	EVW10SM71	3149 04 19	P3YKA00PPBB
3798092	EVW10SMCF	3149 06 10	P3YKA00PPBB
3798117	EVW10SMS	3149 06 13	P3YKA00RN
3798118	EVW10SOMD71	3149 08 13	P3YKA00RN
3798157	EVW10SOMDCF	3149 08 17	P3YKA00RQ
3798159	EVW10SOMDMS	3149 10 17	P3YKA00RQ
3798186	EVW10SR71	3150 00 00 11	P3YKA00RR
3798187	EVW10SRCF	3150 00 00 41	P3YKA00RR
3798203	EVW10SRMS	3150 00 01 45	P3YKA08CY
3798204	EVW10SROMDCF	3150 00 61	P3YKA08CY
3798205	EVW10SSTOSS71	3150-2865	P3YKA1BCP
3798220	EVW12L71	3151 04 00	P3YKA1BCP
3798225	EVW12LCF	3151 06 00	P3YLA16LSNN
3798231	EVW12LDPR71MS	3151 08 00	P3YLA16LSNN
3798261	EVW12LM71	3151 10 00	P3YLA18LSNN
3798322	EVW12LMAOMDCF	3151 12 00	P3YLA18LSNN
3798390	EVW12LMCF	3151 14 00	P3YLA96LSNN
3798391	EVW12LMOMDCF	3156 04 00	P3YLA96LSNN
3798537	EVW12LMS	3156 06 00	P3YMA1V0N
3798539	EVW12LOMD71	3156 08 00	P3YMA1V0N
3798541	EVW12LOMDCF	3158 04 10	P3YMA9V0N
3798562	EVW12LOMDCFVOL	3158 04 13	P3YMA9V0N
3798563	EVW12LOMDMS	3158 04 19	P3YPA16BD2AA2A
3798608	EVW12LR71	3158 06 10	P3YPA16BD2AA2A
3798729	EVW12LRCF	3158 06 13	P3YPA16BD2BA2A
3798799	EVW12LREDCF	3158 06 19	P3YPA16BD2BA2A
3799007	EVW12LRMS	3158 08 10	P3YPA16BD2VA2A
3799011	EVW12LROMD71	3158 08 13	P3YPA16BD2VA2A
3799030	EVW12LROMDCF	3158 08 17	P3YPA16BS2AA2A
3799325	EVW12LSPH71	3158 10 13	P3YPA16BS2AA2A
3799334	EVW12S71	3158 10 17	P3YPA16BS2BA2A
3799338	EVW12SCF	3158 10 21	P3YPA16BS2BA2A
3799341	EVW12SM71	3158 12 17	P3YPA16BS2VA2A
3799342	EVW12SMCF	3158 12 21	P3YPA16BS2VA2A
3799343	EVW12SMS	3159 04 10	P3YPA16CD2AA2A
3799344	EVW12SOMD71	3159 06 10	P3YPA16CD2AA2A
3799345	EVW12SOMDCF	3159 06 13	P3YPA16CD2BA2A
3799394	EVW12SR71	3159 08 10	P3YPA16CD2BA2A
3799451	EVW12SRCF	3159 08 13	P3YPA16CD2VA2A
3799453	EVW12SREDSTOSSOR71	3159 08 17	P3YPA16CD2VA2A
3799455	EVW12SROMDCF	3159 10 13	P3YPA16CS2AA2A
3799457	EVW12SSTOSS71	3159 10 17	P3YPA16CS2AA2A
3799461	EVW14S71	3159 12 13	P3YPA16CS2BA2A
3799478	EVW14SCF	3159 12 17	P3YPA16CS2BA2A
3799483	EVW14SM71	3160 04 00	P3YPA16CS2VA2A
3799484	EVW14SMSTOSS71	3160 06 00	P3YPA16CS2VA2A

3799485	EVW14SOMD71	3160 08 00	P3YPA18BD2AA2A
3799509	EVW14SOMDCF	3160-2865	P3YPA18BD2AA2A
3799510	EVW14SR71	3162 04 00	P3YPA18BD2BA2A
3799517	EVW14SRCF	3162 06 00	P3YPA18BD2BA2A
3799520	EVW15L71	3166 03 04	P3YPA18BD2VA2A
3799525	EVW15LCF	3166 04 06	P3YPA18BD2VA2A
3799526	EVW15LDPR71MS	3166 04 06 52	P3YPA18BS2AA2A
3799527	EVW15LM16EDSTL4CF	3166 04 08	P3YPA18BS2AA2A
3799528	EVW15LMCF	3166 04 08 52	P3YPA18BS2BA2A
3799532	EVW15LMOMDCF	3166 04 10	P3YPA18BS2BA2A
3799533	EVW15LMS	3166 04 56	P3YPA18BS2VA2A
3799534	EVW15LOMD71	3166 06 08	P3YPA18BS2VA2A
3799538	EVW15LOMDCF	3166 06 08 52	P3YPA18CD2AA2A
3799539	EVW15LOMDMS	3166 06 10	P3YPA18CD2AA2A
3799541	EVW15LR71	3166 06 12	P3YPA18CD2BA2A
3799548	EVW15LRCF	3166 06 14	P3YPA18CD2BA2A
3799562	EVW15LREDCF	3166 08 10	P3YPA18CD2VA2A
3799563	EVW15LRMS	3166 08 10 52	P3YPA18CD2VA2A
3799569	EVW15LROMDCF	3166 08 12	P3YPA18CS2AA2A
3799570	EVW16S71	3166 08 14	P3YPA18CS2AA2A
3799571	EVW16SCF	3166 10 12	P3YPA18CS2BA2A
3799572	EVW16SMCF	3166 10 14	P3YPA18CS2BA2A
3799573	EVW16SMOMDCF	3166 12 14	P3YPA18CS2VA2A
3799574	EVW16SOMD71	3166 53 56	P3YPA18CS2VA2A
3799575	EVW16SOMDCF	3166 56 60	P3YPA96BD2AA2A
3799576	EVW16SR71	3166 60 62	P3YPA96BD2AA2A
3799577	EVW16SRCF	3168 06 04	P3YPA96BD2BA2A
3799578	EVW16SRMS	3168 06 04RM	P3YPA96BD2BA2A
3799579	EVW16SROMDCF	3168 08 06	P3YPA96BD2VA2A
3799580	EVW18L1/2NPTCF	3168 08 56	P3YPA96BD2VA2A
3799581	EVW18L71	3168 10 08	P3YPA96BS2AA2A
3799602	EVW18LCF	3168 12 10	P3YPA96BS2AA2A
3799603	EVW18LDPR71MS	3168 56 04	P3YPA96BS2BA2A
3799604	EVW18LM71	3168 56 06	P3YPA96BS2BA2A
3799605	EVW18LMACF	3168 56 53	P3YPA96BS2VA2A
3799606	EVW18LMCF	3169 04 10	P3YPA96BS2VA2A
3799607	EVW18LMMS	3169 04 13	P3YPA96CD2AA2A
3799608	EVW18LMS	3169 04 19	P3YPA96CD2AA2A
3799609	EVW18LOMD71	3169 04 20	P3YPA96CD2BA2A
3799610	EVW18LOMDBL71	3169 04 55	P3YPA96CD2BA2A
3799611	EVW18LOMDCF	3169 06 10	P3YPA96CD2VA2A
3799612	EVW18LOMDMS	3169 06 13	P3YPA96CD2VA2A
3799613	EVW18LR1EDCF	3169 06 19	P3YPA96CS2AA2A
3799614	EVW18LR71	3169 06 55	P3YPA96CS2AA2A
3799616	EVW18LRCF	3169 08 10	P3YPA96CS2BA2A
3799618	EVW18LREDCF	3169 08 13	P3YPA96CS2BA2A
3799623	EVW18LROMD71	3169 08 17	P3YPA96CS2VA2A
3799632	EVW18LROMDCF	3169 10 13	P3YPA96CS2VA2A
3799634	EVW20S71	3169 10 17	P3YPA98BD2AA2A
3799638	EVW20SCF	3169 10 21	P3YPA98BD2AA2A
3799640	EVW20SM71	3169 12 13	P3YPA98BD2BA2A
3799644	EVW20SMCF	3169 12 17	P3YPA98BD2BA2A
3799646	EVW20SMS	3169 12 21	P3YPA98BD2VA2A

3799648	EVW20SOMD71	3169 14 17	P3YPA98BD2VA2A
3799675	EVW20SOMDCF	3169 14 21	P3YPA98BS2AA2A
3799676	EVW20SR71	3169 16 17	P3YPA98BS2AA2A
3799677	EVW20SRCF	3169 16 21	P3YPA98BS2BA2A
3799682	EVW20SROMDCF	317-06266-0	P3YPA98BS2BA2A
3799684	EVW20SSTOSS71	3171 04 20	P3YPA98BS2VA2A
3799686	EVW22L71	3171 53 20	P3YPA98BS2VA2A
3799688	EVW22LCF	3171 56 20	P3YPA98CD2AA2A
3799690	EVW22LMCF	317-10320-0	P3YPA98CD2AA2A
3799725	EVW22LMS	3175 04 10	P3YPA98CD2BA2A
3799822	EVW22LOMD71	3175 04 11	P3YPA98CD2BA2A
3799828	EVW22LOMDCF	3175 04 13	P3YPA98CD2VA2A
3799833	EVW22LOMDMS	3175 04 14	P3YPA98CD2VA2A
3799836	EVW22LOMDVMECF	3175 04 17	P3YPA98CS2AA2A
3799837	EVW22LR71	3175 05 10	P3YPA98CS2AA2A
3799840	EVW22LRCF	3175 05 13	P3YPA98CS2BA2A
3799843	EVW22LREDCF	3175 06 10	P3YPA98CS2BA2A
3799844	EVW22LRMS	3175 06 11	P3YPA98CS2VA2A
3799845	EVW22LROMD71	3175 06 13	P3YPA98CS2VA2A
3799846	EVW22LROMDCF	3175 06 14	P3YRA16BAEN
3799852	EVW25S71	3175 06 17	P3YRA16BAEN
3799855	EVW25SCF	3175 06 21	P3YRA16BAFN
3799858	EVW25SM71	3175 08 10	P3YRA16BAFN
3799859	EVW25SMCF	3175 08 11	P3YRA16BAHN
3799860	EVW25SMS	3175 08 13	P3YRA16BAHN
3799864	EVW25SOMD71	3175 08 14	P3YRA16BAJN
3799870	EVW25SOMDCF	3175 08 17	P3YRA16BAJN
3799881	EVW25SOMDMS	3175 08 18	P3YRA16BNEN
3799882	EVW25SOMDVOLCF	3175 08 21	P3YRA16BNEN
3799883	EVW25SR71	3175 10 10	P3YRA16BNFN
3799912	EVW25SRCF	3175 10 13	P3YRA16BNFN
3799933	EVW25SRDPR71MS	3175 10 14	P3YRA16BNJN
3799967	EVW25SROMDCF	3175 10 17	P3YRA16BNJN
3799974	EVW25SSTOSS71	3175 10 18	P3YRA16BPPN
3799975	EVW28L71	3175 10 21	P3YRA16BPPN
3799976	EVW28LCF	3175 10 22	P3YRA18BAEN
3799977	EVW28LMCF	3175 12 13	P3YRA18BAEN
3799978	EVW28LMS	3175 12 17	P3YRA18BAHN
3799981	EVW28LOMD71	3175 12 18	P3YRA18BAHN
3799985	EVW28LOMDCF	3175 12 21	P3YRA18BAJN
3799986	EVW28LOMDMS	3175 12 22	P3YRA18BAJN
3799988	EVW28LR71	3175 14 17	P3YRA18BNEN
3799989	EVW28LRCF	3175 14 21	P3YRA18BNEN
3799991	EVW28LREDCF	3175 16 17	P3YRA18BNFN
3799998	EVW28LRMS	3175 16 21	P3YRA18BNFN
3799999	EVW28LROMDCF	3175 53 10	P3YRA18BNHN
4152119	EVW30S71	3175 53 11	P3YRA18BNHN
4152119	EVW30SCF	3175 55 10	P3YRA18BNJN
4152129	EVW30SMCF	3175 56 10	P3YRA18BNJN
4152129	EVW30SOMD71	3175 56 11	P3YRA18BPPN
4152158	EVW30SOMDCF	3175 56 13	P3YRA18BPPN
4152158	EVW30SR71	3175 56 14	P3YRA96BNFN
4159925	EVW30SRCF	3175 56 18	P3YRA96BNFN

4159925	EVW30SROMDCF	3175 60 11	P3YRA98BNJN
4181555	EVW35L71	3175 60 13	P3YRA98BNJN
4181555	EVW35LCF	3175 60 14	P3YRA98BPPNEX
4201728	EVW35LDPR71CF	3175 60 17	P3YRA98BPPNEX
4201728	EVW35LM71	3175 60 18	P3YSA16Y0N
4201748	EVW35LMCF	3175 60 21	P3YSA16Y0N
4201748	EVW35LOMD71	3175 62 13	P3YSA18Y0N
4551050	EVW35LOMDCF	3175 62 17	P3YSA18Y0N
4551050	EVW35LR71	3175 62 18	P3YTA16SCNA2CN
4551603	EVW35LRCF	3175 62 22	P3YTA16SCNA2CN
4551603	EVW35LROMDCF	3180 04 00	P3YTA16SCNB2CN
4551606	EVW38S71	3180 06 00	P3YTA16SCNB2CN
4551606	EVW38SCF	3180 08 00	P3YTA16SCND2CN
4551607	EVW38SM71	3180 10 00	P3YTA16SCND2CN
4551607	EVW38SMOMDCF	3180 12 00	P3YTA16SCNE2CN
4551612	EVW38SOMD71	3180 60 00	P3YTA16SCNE2CN
4551612	EVW38SOMDCF	3181 04 19	P3YTA18PPN
4552150	EVW38SRCF	3181 04 55	P3YTA18PPN
4552150	EVW42L71	3181 06 19	P3YTA18SCN0000
4552202	EVW42LCF	3181 06 55	P3YTA18SCN0000
4552202	EVW42LOMD71	3181 56 55	P3YTA18SCNA2CN
4552203	EVW42LOMDCF	3182 04 00	P3YTA18SCNA2CN
4552203	EVW42LR71	3182 04 00 52	P3YTA18SCNB2CN
4552204	EVW42LRCF	3182 04 06	P3YTA18SCNB2CN
4552204	EVW42LROMDCF	3182 06 00	P3YTA18SCND2CN
4552206	EW02 L8 00	3182 06 00 52	P3YTA18SCND2CN
4552206	EW05 L8 00	3182 06 04	P3YTA18SCNE2CN
4552207	EW06 00 05	3182 06 08	P3YTA18SCNE2CN
4552207	EW06L71	3182 08 00	P3YVA16LBN
4552252	EW06LCF	3182 08 00 52	P3YVA16LBN
4552252	EW06LMED71	3182 08 10	P3YVA18LBN
4553001	EW06LMEDCF	3182 10 00	P3YVA18LBN
4553001	EW06LMEDOMD71	3182 10 12	P3ZFA00BMAN
4553002	EW06LMEDOMDCF	3182 12 00	P3ZFA00BMAN
4553002	EW06LOMD71	3183 04 00	P3ZFA00DMAN
4553007	EW06LOMDCF	3183 04 06	P3ZFA00DMAN
4553007	EW06LRED71	3183 06 00	P3ZFA00FMAN
004752900	EW06LREDCF	3183 06 08	P3ZFA00FMAN
004752900	EW06LREDCRCF	3183 08 00	P3ZFA00HMAN
5000035	EW06LREDOMD71	3183 08 10	P3ZFA00HMAN
5000040	EW06LREDOMDCF	3183 10 00	P3ZFA00MMAN
5000041	EW06LVITCF	3183 10 12	P3ZFA00MMAN
5000051	EW06LVITOMDCF	3183 12 00	P3ZFA1BBMAN
5000055	EW06S71	3184 04 00	P3ZFA1BBMAN
5000079	EW06SCF	3184 04 00 52	P3ZFA1BDMAN
5000084	EW06SMEDCF	3184 04 06	P3ZFA1BDMAN
5000090	EW06SMEDOMD71	3184 06 00	P3ZFA1BFMAN
5000091	EW06SMEDOMDCF	3184 06 00 52	P3ZFA1BFMAN
5000094	EW06SOMD71	3184 06 08	P3ZFA1BHMAN
5000101	EW06SOMDCF	3184 08 00	P3ZFA1BHMAN
5000102	EW06SRED71	3184 08 10	P3ZFA1BMMAN
5000105	EW06SREDCF	3184 10 00	P3ZFA1BMMAN
5000118	EW06SREDOMDCF	3184 10 12	P3ZFA1CBMAN

5000119	EW06SVITOMDCF	3184 12 00	P3ZFA1CBMAN
5000120	EW06ZL71	3185FIL	P3ZFA1CDMAN
5000123	EW06ZLCF	3185FIL	P3ZFA1CDMAN
5000132	EW06ZLMEDCF	3186FIL	P3ZFA1CFMAN
5000134	EW06ZLRED71	3186FIL	P3ZFA1CFMAN
5000152	EW06ZLREDCF	3188 04 00	P3ZFA1CHMAN
5000204	EW06ZLVITCF	3188 04 06	P3ZFA1CHMAN
5000205	EW06ZS71	3188 06 00	P3ZFA1CMMAN
5000242	EW06ZSCF	3188 06 08	P3ZFA1CMMAN
5000270	EW06ZSRED71	3188 08 00	P3ZKA/A00001
5000279	EW06ZSREDCF	3188 08 10	P3ZKA/A00001
5000429	EW08L71	3188 10 00	P3ZKA00CB
5000437	EW08LCF	3188 10 12	P3ZKA00CB
5000449	EW08LDPR71CF	3188 12 00	P3ZKA00ESA
5000469	EW08LMED71	3189 04 10	P3ZKA00ESA
5000471	EW08LMEDCF	3189 04 19	P3ZKA00ESC
5000472	EW08LMEDOMD71	3189 06 10	P3ZKA00ESC
5000473	EW08LMEDOMDCF	3189 06 13	P3ZKA00ESE
5000474	EW08LNBROMD71	3189 06 19	P3ZKA00ESE
5000475	EW08LOMD71	3189 08 10	P3ZKA00ESG
5000476	EW08LOMDCF	3189 08 13	P3ZKA00ESG
5000477	EW08LRED71	3189 08 17	P3ZKA00MW
5000480	EW08LREDCF	3189 10 13	P3ZKA00MW
5000488	EW08LREDOMD71	3189 10 17	P3ZKA00RQ
5000511	EW08LREDOMDCF	3189 12 13	P3ZKA00RQ
5000526	EW08LREDVITOMDCF	3189 12 17	P3ZKA00RR
5000558	EW08LVITCF	3191FIL	P3ZKA00RR
5000613	EW08LVITOMDCF	3191FIL	P3ZKA0CCY
5000614	EW08S71	3192 04 10	P3ZKA0CCY
5000697	EW08SCF	3192 04 13	P3ZKA1BCP
5000763	EW08SMEDCF	3192 06 10	P3ZKA1BCP
5000838	EW08SMEDOMD71	3192 06 13	P3ZKA1CCP
5000963	EW08SOMD71	3192 08 10	P3ZKA1CCP
5000972	EW08SOMDCF	3192 08 13	P3ZLA1BLSMN
5000973	EW08SRED71	3192 08 17	P3ZLA1BLSMN
5000983	EW08SREDCF	3192 10 13	P3ZLA1CEMMW
5000984	EW08SREDOMD71	3192 10 17	P3ZLA1CEMMW
5000985	EW08SREDOMDCF	3192 10 21	P3ZLA1CLSMN
5000990	EW08SVITCF	3192 12 13	P3ZLA1CLSMN
5000992	EW08SVITOMDCF	3192 12 17	P3ZLA1CMMMW
5001024	EW08ZL71	3192 12 21	P3ZLA1CMMMW
5001027	EW08ZLCF	3192FIL	P3ZMA1V0N
5001037	EW08ZLMEDCF	3192FIL	P3ZMA1V0N
5001038	EW08ZLRED71	3193 04 10	P3ZPA/A00001
5001039	EW08ZLREDCF	3193 04 13	P3ZPA/A00001
5001045	EW08ZLSSACF	3193 04 19	P3ZPA1BAD2AA2A
5001081	EW08ZLVITCF	3193 06 10	P3ZPA1BAD2AA2A
5001091	EW08ZS71	3193 06 13	P3ZPA1CAD2VA2A
5001162	EW08ZSCF	3193 06 19	P3ZPA1CAD2VA2A
5001163	EW08ZSMEDCF	3193 08 10	P3ZRA00BNGN
5001165	EW08ZSRED71	3193 08 13	P3ZRA00BNGN
5001167	EW08ZSREDCF	3193 08 17	P3ZRA00BNHN
5001176	EW08ZSVITCF	3193 10 13	P3ZRA00BNHN

5001259	EW09 00 64	3193 10 17	P3ZRA00BNJN
5001262	EW10-1/4B	3193 10 21	P3ZRA00BNJN
5001270	EW10-101	3193 12 13	P3ZRA00BNNN
5001324	EW10-104	3193 12 17	P3ZRA00BNNN
5001380	EW10-3/8B	3193 12 21	P3ZRA00BPPN
5001389	EW10L71	3193 14 17	P3ZRA00BPPN
5001399	EW10LCF	3193 14 21	P3ZRA1BBNGN
5001434	EW10LCRCF	3193 16 17	P3ZRA1BBNGN
5001571	EW10LDPR71CF	3193 16 21	P3ZRA1BBNHN
5001572	EW10LEPDM71	3198 04 10	P3ZRA1BBNHN
5001573	EW10LEPDMOMD71	3198 04 13	P3ZRA1BBNJN
5001574	EW10LMED71	3198 04 19	P3ZRA1BBNJN
5001575	EW10LMEDCF	3198 06 10	P3ZRA1BBNNN
5001576	EW10LMEDDPR71CF	3198 06 13	P3ZRA1BBNNN
5001708	EW10LMEDOMD71	3198 06 19	P3ZRA1BBPPN
5001709	EW10LMEDOMDCF	3198 06 19 52	P3ZRA1BBPPN
5001710	EW10LMS	3198 08 10	P3ZRA1BBPRN
5001711	EW10LOMD71	3198 08 13	P3ZRA1BBPRN
5001716	EW10LOMD71BP	3198 08 17	P3ZRA1CBNGN
5001717	EW10LOMDCF	3198 10 13	P3ZRA1CBNGN
5001720	EW10LOMDMS	3198 10 17	P3ZRA1CBNHN
5001723	EW10LRED71	3198 10 21	P3ZRA1CBNHN
5001724	EW10LREDCF	3198 12 13	P3ZRA1CBNJN
5001727	EW10LREDDPR71CF	3198 12 17	P3ZRA1CBNJN
5001734	EW10LREDOMD71	3198 12 21	P3ZRA1CBNNN
5001737	EW10LREDOMDCF	3198 14 17	P3ZRA1CBNNN
5001738	EW10LREDVITCF	3198 14 21	P3ZRA1CBPPN
5002190	EW10LVITCF	3198 16 17	P3ZRA1CBPPN
5002290	EW10LVITOMDCF	3198 16 21	P3ZRA1CBPRN
5002347	EW10S71	3199 00 00 05	P3ZRA1CBPRN
5002491	EW10SCF	3199 00 00 06	P3ZRA9BBPPN
5002497	EW10SDPR71CF	3199 00 00 61	P3ZRA9BBPPN
5002516	EW10SMED71	3199 00 00 70	P3ZRA9CBPPN
5002522	EW10SMEDCF	3199 00 01 02	P3ZRA9CBPPN
5003025	EW10SOMD71	3199 00 01 03	P3ZSA1BY0N
5003091	EW10SOMD71N	3199 03 09	P3ZSA1BY0N
5003092	EW10SOMDCF	3199 03 09 52	P3ZTA00SCNB2CN
5003093	EW10SRED71	3199 03 19	P3ZTA00SCNB2CN
5003129	EW10SREDCF	3199 04 09	P3ZTA1CSCNA2CN
5003136	EW10SREDOMD71	3199 04 10	P3ZTA1CSCNA2CN
5003141	EW10SREDOMDCF	3199 04 10 52	P401PN0030M080/100/19/40
5003142	EW10SREDVITCF	3199 04 13	P401PN0030M095/115/19/40
5003163	EW10SVITCF	3199 04 13 52	P401PN0030M110/130/24/50
5003173	EW10SVITOMDCF	3199 04 19	P401PN0050M080/100/14/40
5003223	EW10ZL71	3199 04 19 52	P401PN0050M080/100/19/40
5003288	EW10ZLCF	3199 04 52	P401PN0070M080/100/14/40
5003408	EW10ZLMED71	3199 04 55	P401PN0070M080/100/19/40
5003413	EW10ZLMEDCF	3199 06 10	P401PN0100M080/100/14/40
5003564	EW10ZLNBR71	3199 06 10 30	P401PN0100M080/100/19/40
5003630	EW10ZLRED71	3199 06 10 52	P401PN0100M095/115/19/40
5003693	EW10ZLREDCF	3199 06 13	P401PV0030M095/115/19/40
5003716	EW10ZLREDSSACF	3199 06 13 52	P401PV0040M095/115/19/40
5003753	EW10ZLSSACF	3199 06 17	P401PV0040M095/130/19/40

5003995	EW10ZLVITCF	3199 06 19	P401PV0050M095/115/19/40
5004032	EW10ZS71	3199 06 19 52	P401PV0050M110/130/24/50
5004044	EW10ZSCF	3199 06 21	P401PV0070M095/115/19/40
5004055	EW10ZSR1/4EDNBR71	3199 06 55	P401PV0100M095/115/19/40
5004072	EW10ZSRED71	3199 06 60	P401PV0100M110/130/19/40
5004091	EW10ZSREDCF	3199 06 67	P401PV0100M110/130/24/50
5004092	EW10ZSVITCF	3199 08 10	P412PN0200M080/100/19/40
5004109	EW12L71	3199 08 10 52	P412PN0250M080/100/14/40
5004110	EW12LCF	3199 08 13	P412PN0250M080/100/19/40
5004115	EW12LCRCF	3199 08 13 52	P412PN0350M080/100/19/40
5004138	EW12LDPR71CF	3199 08 17	P412PN0490M080/100/14/40
5004205	EW12LMEDCF	3199 08 21	P412PN1000M080/100/14/40
5004339	EW12LMEDOMD71	3199 08 60	P4230-1HUCD
5004634	EW12LMEDOMDCF	3199 08 67	P4230-1VUCS
5004656	EW12LMS	3199 10 13	P4250-1VUCD
5004696	EW12LNBROMD71	3199 10 17	P4330-1VUCD
5004711	EW12LOMD71	3199 10 17 52	P4BG2001A001
5004744	EW12LOMDCF	3199 10 21	P4BG2001A001
5004776	EW12LR1/4ED71	3199 12 13	P4BG2001A002
5004785	EW12LRED71	3199 12 17	P4BG2001A002
5004809	EW12LREDCF	3199 12 21	P4BG2001A003
5004863	EW12LREDDPR71CF	3199 14 17	P4BG2001A003
5004916	EW12LREDOMD71	3199 14 21	P4BG2001A004
5004963	EW12LREDOMDCF	3199 16 17	P4BG2001A004
5004964	EW12LREDVITCF	3199 16 21	P4BG2001A005
5005151	EW12LREDVITOMDCF	31D82-10-4	P4BG2001A005
5005160	EW12LVITCF	31D82-10-6	P4BG2001A006
5010010	EW12LVITOMDCF	31D82-10-6B	P4BG2001A006
5010011	EW12S71	31D82-10-6BK	P4BG2001A007
5010016	EW12SCF	31D82-10-6C	P4BG2001A007
5010017	EW12SMEDCF	31D82-12-6	P4BG2001A008
5010018	EW12SMEDOMD71	31D82-12-6B	P4BG2001A008
5010024	EW12SMEDOMDCF	31D82-12-6BK	P4BG2001A009
5010028	EW12SMEDVITCF	31D82-12-6C	P4BG2001A009
5010033	EW12SNBROMD71	31D82-12-8C	P4BG2003A002
5020006	EW12SOMD71	31D82-15-8	P4BG2003A002
5020026	EW12SOMDCF	31D82-15-8B	P4BG4001A002
5020027	EW12SRED71	31D82-15-8C	P4BG4001A002
5030007	EW12SREDCF	31D82-18-10	P4BG4001A003
5030008	EW12SREDOMD71	31D82-18-10BK	P4BG4001A003
5030024	EW12SREDOMDCF	31D82-18-10C	P4BG4001A004
5030025	EW12SREDVITOMDCF	31D82-22-12	P4BG4001A004
5030026	EW12SVITCF	31D82-22-12C	P4BG4001A005
5030027	EW12SVITOMDCF	31D82-6-4	P4BG4001A005
5030029	EW12X15-1/4B	31D82-6-4BK	P4BG4001A006
5030030	EW12X15-1/8B	31D82-8-4	P4BG4001A006
5030034	EW12ZL71	31D82-8-4B	P4BN2001A003
5030035	EW12ZLCF	31D82-8-4BK	P4BN2001A003
5030060	EW12ZLMEDCF	31D82-8-4C	P4CG2001C001
5030061	EW12ZLRED71	31KAKU13SPN	P4CG2001C001
5030062	EW12ZLREDCF	31-P-102	P4CG2001C002
5030063	EW12ZLREDNBR71	31-P-55	P4CG2001C002
5030064	EW12ZLSSACF	31-P-57	P4CG2001C006

5030065	EW12ZLVITCF	31-P-61	P4CG2001C006
5030066	EW12ZS71	31-P-62	P4CG2001C008
5030067	EW12ZSCF	31-P-70	P4CG2001C008
5030070	EW12ZSMEDCF	31-P-90	P4CG2002C001
5030071	EW12ZSRED71	31-P-92	P4CG2002C001
5030072	EW12ZSREDCF	31-P-94	P4CG2002C007
5030073	EW14S71	31SFAK10SXZ	P4CG2002C007
5030074	EW14SCF	31SFAK13SXZ	P4CG2002C008
5030075	EW14SMEDCF	31SFAK17SXZ	P4CG2002C008
5030076	EW14SMEDOMDCF	31SFAK21SXZ	P4CG2003C001
5030077	EW14SOMD71	31SFIW10SXZ	P4CG2003C001
5030080	EW14SOMDCF	31SFIW13SXZ	P4CG4001C001
5030083	EW14SRED71	31SFIW17SXZ	P4CG4001C001
5030087	EW14SREDCF	31SFKU13MXN	P4CG4001C002
5030089	EW14SREDOMDCF	31SFTF06SXZ	P4CG4001C002
5030090	EW14ZSCF	31SFTF08SXZ	P4CG4001C005
5030092	EW14ZSRED71	31SFTF10SXZ	P4CG4001C005
5030093	EW15-1/2B	31SFTF13SXZ	P4CG4001C006
5030096	EW15L71	31V-4D0004-BE-2S-0000	P4CG4001C006
5030103	EW15LCF	31V-4D0004-BF-2S-0000	P4CG4101D001
5030110	EW15LDPR71CF	31V-4D0004-BN-2S-0000	P4CG4101D001
5030124	EW15LMEDCF	31V-4D0005-BE-0S-0000	P4CG4201D003
5030125	EW15LMEDOMDCF	31V-4D0005-BE-2S-0000	P4CG4201D003
5030126	EW15LMEDVITOMDCF	31V-4D0005-BF-0S-0000	P4CG4201D004
5030166	EW15LMS	31V-4D0005-BF-2E-0000	P4CG4201D004
5030183	EW15LOMD71	31V-4D0005-BF-2S-0000	P4CG4201D005
5030216	EW15LOMDCF	31V-4D0005-BN-2S-0000	P4CG4201D005
5030217	EW15LOMDMS	31V-4D0006-BE-2S-0000	P4CG4203D003
5030218	EW15LOMDVOLCF	31V-4D0006-BF-2S-0000	P4CG4203D003
5030219	EW15LRED71	31V-4D0006-BN-2S-0000	P4CG4461C002
5031007	EW15LREDCF	31V-4D0008-BE-2S-0000	P4CG4461C002
5031010	EW15LREDOMD71	31V-4D0008-BF-2S-0000	P4CG6101C001
5031016	EW15LREDOMDCF	31V-4D0008-BN-2S-0000	P4CG6101C001
5031022	EW15LREDVITCF	31V-4D0010-BE-0S-0000	P4CG6101C002
5031048	EW15LREDVITOMDCF	31V-4D0010-BE-2S-0000	P4CG6101C002
5031057	EW15LVITCF	31V-4D0010-BF-2E-0000	P4CG6101C011
5031061	EW15LVITOMDCF	31V-4D0010-BF-2S-0000	P4CG6101C011
5031063	EW15ZL71	31V-4D0010-BN-2S-0000	P4CG9101C001
5031086	EW15ZLCF	31V-4D0012-BE-0S-0000	P4CG9101C001
5031097	EW15ZLMEDCF	31V-4D0012-BE-2E-0000	P4CG9101C002
5031098	EW15ZLRED71	31V-4D0012-BE-2S-0000	P4CG9101C002
5031105	EW15ZLREDCF	31V-4D0012-BF-2S-0000	P4CG9101C010
5031113	EW15ZLSSACF	31V-4D0012-BN-0S-0000	P4CG9101C010
5031124	EW15ZLVITCF	31V-4D0012-BN-2S-0000	P4CN4001C002
5035003	EW15ZLVITSSACF	31V-4E0016-BE-2S-0000	P4CN4001C002
5035007	EW16-101	31V-4E0016-BF-2S-0000	P4FC4
5035016	EW16-104	31V-4E0016-BN-0S-0000	P4FE2
5041198	EW16S71	31V-4E0016-BN-2S-0000	P4FE4
5715093	EW16SCF	31V-4E0023-BE-2E-0000	P4GAA12
5715218	EW16SMEDCF	31V-4E0023-BE-2S-0000	P4GAA12
5715543	EW16SMEDOMD71	31V-4E0023-BF-2S-0000	P4GAA13
5715596	EW16SMEDOMDCF	31V-4E0023-BN-2S-0000	P4GAA13
5715614	EW16SMEDVITOMDCF	31V-4F0032-BE-2S-0000	P4GAA16

5715615	EW16SOMD71	31V-4F0032-BF-2S-0000	P4GAA16
5715616	EW16SOMDCF	31V-4F0032-BN-1S-0000	P4GAA18
5715620	EW16SOMDNBR71	31V-4F0032-BN-2S-0000	P4GAA18
5715623	EW16SRED71	31V-4F0038-BE-2E-0000	P4GAA1C
5715624	EW16SREDCF	31V-4F0038-BE-2S-0000	P4GAA1C
5715626	EW16SREDOMD71	31V-4F0038-BF-2S-0000	P4GBA12
5715628	EW16SREDOMDCF	31V-4F0038-BN-1S-0000	P4GBA12
5715630	EW16SREDVITCF	31V-4F0038-BN-2S-0000	P4GBA13
5715632	EW16SVITCF	32 BL-S	P4GBA13
5715633	EW16SVITOMDCF	32 BODY DIE	P4GBA14
5715635	EW16ZS71	32 BTX-S	P4GBA14
6005800	EW16ZSCF	32 BZ-SS	P4GCA14
6005800	EW16ZSMEDCF	32 C5OLO-S	P4GCA14
6306061	EW16ZSRED71	32 C5OX-S	P4MC2
6306061	EW16ZSREDCF	32 C6X-S	P4MC4
6330460	EW16ZSREDNBR71	3-2 CBZ-SS	P4MC6
6330460	EW16ZSVITCF	32 CTX-S	P4ME4
6330540	EW18L71	3-2 DBZ-SS	P4Q-BA12
6330540	EW18LCF	32 ELO-S	P4Q-BA12
6330760	EW18LDPR71CF	32 ETX-S	P4Q-BA13
6330760	EW18LMEDCF	32 F5OLO-S	P4Q-BA13
6340120	EW18LMEDOMD71	32 F5OX-S	P4Q-BV12
6340120	EW18LMEDOMDCF	3-2 FBZ-B	P4Q-BV12
6340560	EW18LNBROMD71	3-2 FBZ-SS	P4Q-BV13
6340560	EW18LOMD71	3-2 FH4BZ-SS	P4Q-BV13
6340640	EW18LOMDCF	32 FNL-S	P4Q-CA14
6340640	EW18LRED71	32 FNTX-S	P4Q-CA14
6340840	EW18LREDCF	32 FTX-S	P4Q-CA16
6340840	EW18LREDDPR71CF	3-2 GBZ-SS	P4Q-CA16
6350020	EW18LREDOMD71	3-2 HBZ-SS	P4Q-CV14
6350020	EW18LREDOMDCF	32 HLO-S	P4Q-CV14
6350040	EW18LREDVITCF	32 HTX-S	P4Q-CV16
6350040	EW18LREDVITOMDCF	32 JLO-S	P4Q-CV16
6350180	EW18LVITCF	32 JTX-S	P-50
6350180	EW18LVITOMDCF	32 JW-SS	P-5015
6350200	EW18ZL71	32 NUT DIE	P501PN0030M110/130/24/50
6350200	EW18ZLCF	32 P5ON-S	P501PN0050M095/115/19/40
6350220	EW18ZLMEDCF	32 PNBZ-SS	P501PN0050M110/130/24/50
6350220	EW18ZLRED71	32 PNLO-S	P501PN0050M130/165/24/50
6350456	EW18ZLREDCF	32 PNTX-S	P501PN0070M095/115/19/40
6350456	EW18ZLREDVITCF	32 R6X-S	P501PN0070M130/165/24/58
6350560	EW18ZLVITCF	3-2 T2HF-SS	P501PN0100M095/115/19/40
6350560	EW20S71	32 TL-S	P501PV0030M130/165/24/58
6350720	EW20SCF	32 TPL-S	P501PV0070M130/165/24/58
6350720	EW20SMEDCF	3-2 TRBZ-SS	P501PV0100M130/165/24/58
6360020	EW20SMEDOMD71	32 TX-S	P512PN0490M110/130/24/50
6360020	EW20SMEDOMDCF	32 TZ-SS	P56-40044-H
6360040	EW20SOMD71	32 WLN-S	P56-40071-H
6360040	EW20SOMDCF	32 XEQ1-S	P56-40373-H
6360060	EW20SRED71	32 XHQ1-S	P56-40470-H
6360060	EW20SREDCF	32 XVQ1-S	P56-40484-H
6360068	EW20SREDOMD71	3200-1477	P56-40686-H
6360068	EW20SREDOMDCF	3200-32-00150-0000-000000	P56-40697-0

6360070	EW20SREDVITCF	3200-32-00150-0000-000000	P5GCM10BMN0180B
6360070	EW20SVITCF	3200-32-00250-0000-000000	P5GCM10BMN0180B
6360075	EW20SVITOMDCF	3200-32-00250-0000-000000	P5GCM10HMN0004B
6360075	EW20ZS71	3200-32-00250-1000-000000	P5GCM10HMN0004B
6360080	EW20ZSCF	3200-32-00250-1000-000000	P5GCM10KMN0040B
6360080	EW20ZSRED71	3200-32-00265-0000-000000	P5GCM10KMN0040B
6360082	EW20ZSREDCF	3200-32-00265-0000-000000	P5GCM16BMN0180B
6360082	EW20ZSREDNBR71	3200-32-00300-0000-000000	P5GCM16BMN0180B
6360085	EW20ZSVITCF	3200-32-00300-0000-000000	P5GCM16HDN0006B
6360085	EW22L71	3200-32-00320-0000-000000	P5GCM16HDN0006B
6360090	EW22LCF	3200-32-00320-0000-000000	P5GCM16HMN0006B
6360090	EW22LDPR71CF	3200-32-00320-1000-000000	P5GCM16HMN0006B
6360100	EW22LMED71	3200-32-00320-1000-000000	P5GCM16KMN0040B
6360100	EW22LMEDCF	3200-32-00350-0000-000000	P5GCM16KMN0040B
6360110	EW22LMEDOMDCF	3200-32-00350-0000-000000	P5GCM20BMN0180B
6360110	EW22LMEDVITOMDCF	3200-32-00400-0000-000000	P5GCM20BMN0180B
6360114	EW22LNBROMD71	3200-32-00400-0000-000000	P5GCM20HMN0010B
6360114	EW22LOMD71	3200-32-00420-0000-000000	P5GCM20HMN0010B
6360115	EW22LOMDCF	3200-32-00420-0000-000000	P5GCM25BMN0180B
6360115	EW22LOMDMS	3200-32-00450-0000-000000	P5GCM25BMN0180B
6360120	EW22LOMDVOLCF	3200-32-00450-0000-000000	P5GCM25HDN0014B
6360120	EW22LRED71	3200-32-00450-3000-000000	P5GCM25HDN0014B
6360128	EW22LREDCF	3200-32-00450-3000-000000	P5GCM25HMN0014B
6360128	EW22LREDDPR71CF	3200-32-00460-0000-000000	P5GCM25HMN0014B
6360168	EW22LREDOMD71	3200-32-00460-0000-000000	P5GCM25KBN0040B
6360168	EW22LREDOMDCF	3200-32-00500-0000-000000	P5GCM25KBN0040B
6360169	EW22LREDVITCF	3200-32-00500-0000-000000	P5SS-008DSG030B
6360169	EW22LVITCF	3200-32-00600-0000-000000	P5SS-008DSG030B
6360180	EW22LVITOMDCF	3200-32-00600-0000-000000	P5SS-016DSG075B
6360180	EW22ZL71	3200-32-00650-0000-000000	P5SS-016DSG075B
6360189	EW22ZLCF	3200-32-00650-0000-000000	P5T-C016DGSE010
6360189	EW22ZLMEDCF	3200-32-00700-0000-000000	P5T-C016DGSE010
6360190	EW22ZLRED71	3200-32-00700-0000-000000	P5T-C016DGSE040
6360190	EW22ZLREDCF	3200-32-00800-0000-000000	P5T-C016DGSE040
6360193	EW22ZLSSACF	3200-32-00800-0000-000000	P5T-C016DGSN010
6360193	EW22ZLVITCF	3200-32-00820-0000-010000	P5T-C016DGSN010
6360194	EW25-104	3200-32-00820-0000-010000	P5T-C016DGSN025
6360194	EW25S71	3200-32-00850-0000-000000	P5T-C016DGSN025
6360200	EW25SCF	3200-32-00850-0000-000000	P5T-C016DGSN040
6360200	EW25SMEDCF	3200-32-00850-0000-010000	P5T-C016DGSN040
6360202	EW25SMEDOMD71	3200-32-00850-0000-010000	P5T-C016DGSN050
6360202	EW25SMEDOMDCF	3200-32-00850-3000-000000	P5T-C016DGSN050
6360220	EW25SOMD71	3200-32-00850-3000-000000	P5T-C016DGSN100
6360220	EW25SOMDCF	3200-32-00875-3000-000000	P5T-C016DGSN100
6360224	EW25SRED71	3200-32-00875-3000-000000	P5T-C020DGSN025
6360224	EW25SREDCF	3200-32-00920-0000-000000	P5T-C020DGSN025
6360240	EW25SREDOMD71	3200-32-00920-0000-000000	P5T-C020DGSN040
6360240	EW25SREDOMDCF	3200-32-00960-0000-000000	P5T-C020DGSN040
6360250	EW25SVITCF	3200-32-00960-0000-000000	P5T-C020DGSN050
6360250	EW25SVITOMDCF	3200-32-01000-0000-000000	P5T-C020DGSN050
6360280	EW25ZS71	3200-32-01000-0000-000000	P5T-C020DGSN075
6360280	EW25ZSCF	3200-32-01100-0000-000000	P5T-C020DGSN075
006450060	EW25ZSMEDCF	3200-32-01100-0000-000000	P5T-C020DGSN100

006450060	EW25ZSRED71	3200-32-01150-0000-000000	P5T-C020DGSN100
6500278	EW25ZSREDCF	3200-32-01150-0000-000000	P5T-C020DGSN125
6500278	EW25ZSVITCF	3200-32-01150-3000-000000	P5T-C020DGSN125
6500303	EW26-104-20	3200-32-01150-3000-000000	P5T-C020DGSN150
6500303	EW28L71	3200-32-01200-0000-000000	P5T-C020DGSN150
6500329	EW28LCF	3200-32-01200-0000-000000	P5T-C025DGSN025
6500329	EW28LDPR71CF	3200-32-01250-0000-000000	P5T-C025DGSN025
6500350	EW28LMEDCF	3200-32-01250-0000-000000	P5T-C025DGSN050
6500350	EW28LMEDOMDCF	3200-32-01500-0000-000000	P5T-C025DGSN050
6500357	EW28LMEDVITOMDCF	3200-32-01500-0000-000000	P5T-C025DGSN075
6500357	EW28LMS	3202 03 00	P5T-C025DGSN075
6500364	EW28LOMD71	3204 03 00	P5T-C025DGSN100
6500364	EW28LOMDCF	3206 03 00	P5T-C025DGSN100
6500370	EW28LRED71	320R-RAC-01	P5T-C032DGSN050
6500370	EW28LREDCF	320R-RAC-02	P5T-C032DGSN050
6500401	EW28LREDDPR71CF	3210-1477	P5T-C032DGSN100
6500401	EW28LREDOMDCF	3213-PP	P5T-C032DGSN100
6500416	EW28LREDVITCF	3218 03 09	P5T-C032DGSN125
6500416	EW28LREDVITOMDCF	3218 03 19	P5T-C032DGSN125
6500425	EW28LVITCF	3219FIL	P5T-C032DGSN200
6500425	EW28LVITOMDCF	3219FIL	P5T-C032DGSN200
6500428	EW28ZL71	321F2523-852023-483824P8	P5T-C032SGSN100
6500428	EW28ZLCF	321F2523-852023-483824P8	P5T-C032SGSN100
6500431	EW28ZLRED71	321F2523-876024-483824P8	P5T-C040DGSD050
6500431	EW28ZLREDCF	321F2523-876024-483824P8	P5T-C040DGSD050
6500467	EW28ZLVITCF	321F35	P5T-C040DGSN025
6500467	EW30S71	321F35	P5T-C040DGSN025
6500488	EW30SCF	321F35-2995-481865C2	P5T-C040DGSN050
6500488	EW30SMEDCF	321F35-2995-481865C2	P5T-C040DGSN050
6500489	EW30SMEDOMDCF	321G3790	P5T-C040DGSN075
6500489	EW30SOMD71	321G3790	P5T-C040DGSN075
6500494	EW30SOMDCF	321H1590	P5T-C040DGSN100
6500494	EW30SRED71	321H1590	P5T-C040DGSN100
6500498	EW30SREDCF	321H1590-2995-48358001N7	P5T-C050DGSA150
6500498	EW30SREDOMD71	321H1590-2995-48358001N7	P5T-C050DGSA150
6500500	EW30SREDOMDCF	321H2322	P5T-C050DGSN025
6500500	EW30SVITCF	321H2322	P5T-C050DGSN025
6500535	EW30SVITOMDCF	321H2322-852023-483541B5	P5T-C050DGSN050
6500535	EW30ZS71	321H2322-852023-483541B5	P5T-C050DGSN050
6500536	EW30ZSCF	321H2322-852023-483541P8	P5T-C050DGSN075
6500536	EW30ZSREDCF	321H2322-852023-483541P8	P5T-C050DGSN075
6500562	EW30ZSREDNBR71	321H2322-852023-483541T1	P5T-C050DGSN100
6500562	EW32-104	321H2322-852023-483541T1	P5T-C050DGSN100
6500565	EW35L71	321H2322-876024-483541B5	P5T-C050SGSD050
6500565	EW35LCF	321H2322-876024-483541B5	P5T-C050SGSD050
6500573	EW35LMEDCF	321H2322-876024-483541P8	P5T-C063DGSN025
6500573	EW35LMEDOMDCF	321H2322-876024-483541P8	P5T-C063DGSN025
6500577	EW35LOMD71	321H2322-876024-483541T1	P5T-C063DGSN100
6500577	EW35LOMDCF	321H2322-876024-483541T1	P5T-C063DGSN100
6500589	EW35LRED71	321H2522-852023-483541B5	P5T-C063DGSN125
6500589	EW35LREDCF	321H2522-852023-483541B5	P5T-C063DGSN125
6500622	EW35LREDOMDCF	321H2522-852023-483541B7	P5T-C063DGSN150
6500622	EW35LREDVITCF	321H2522-852023-483541B7	P5T-C063DGSN150

6500634	EW35LVITCF	321H2522-852023-483541P8	P5T-C063SGSD025
6500634	EW35LVITOMDCF	321H2522-852023-483541P8	P5T-C063SGSD025
6500643	EW35ZL71	321H2522-852023-483541T1	P5V-BKS12
6500643	EW35ZLCF	321H2522-852023-483541T1	P5V-BKS12
6500686	EW35ZLRED71	321H2522-876024-483541B7	P5V-BKS13
6500686	EW35ZLREDCF	321H2522-876024-483541B7	P5V-BKS13
6500743	EW35ZLVITCF	321H2522-876024-483541P8	P5V-CFA080A2A
6500743	EW38S71	321H2522-876024-483541P8	P5V-CFA080A2A
6500782	EW38SCF	321H2522-876024-483541T1	P5V-CFA100A2A
6500782	EW38SMEDCF	321H2522-876024-483541T1	P5V-CFA100A2A
6500783	EW38SOMD71	321H2523-852023-483824P8	P5V-CFA100CAA
6500783	EW38SOMDCF	321H2523-852023-483824P8	P5V-CFA100CAA
6500812	EW38SRED71	321H2523-852023-483824T1	P5V-CFS03035N
6500812	EW38SREDCF	321H2523-852023-483824T1	P5V-CFS03035N
6500855	EW38SREDOMD71	321H2523-852025-483824P8	P5V-CFS05011N
6500855	EW38SREDOMDCF	321H2523-852025-483824P8	P5V-CFS05011N
6500881	EW38SVITCF	321H2523-876024-483824B5	P5V-CFS07512N
6500881	EW38SVITOMDCF	321H2523-876024-483824B5	P5V-CFS07512N
6500950	EW38ZS71	321H2523-876024-483824P8	P5V-CFS07512S
6500950	EW38ZSCF	321H2523-876024-483824P8	P5V-CFS07512S
6500956	EW38ZSRED71	321H2523-876024-483824T1	P5V-CFS08212N
6500956	EW38ZSREDCF	321H2523-876024-483824T1	P5V-CFS08212N
6501028	EW38ZSREDNBR71	321H35	P5V-CFS10013N
6501028	EW38ZSVITCF	321H35	P5V-CFS10013N
6501231	EW42L71	321H35-2995-481865C2	P5V-CFS15014N
6501231	EW42LCF	321H35-2995-481865C2	P5V-CFS15014N
6501938	EW42LMEDCF	321HS8052	P5V-CFS30018N
6501938	EW42LMEDOMDCF	321HS8052	P5V-CFS30018N
6501940	EW42LOMD71	321K1523-2169-496193C2	P5V-FLNA1
6501940	EW42LOMDCF	321K1523-2169-496193C2	P5V-FLNA1
6501959	EW42LRED71	321K1535-2168-496193C1	P5V-FLNA2
6501959	EW42LREDCF	321K1535-2168-496193C1	P5V-FLNA2
6501978	EW42LREDOMD71	321K1535-2169-496193C2	P5V-GAR0312
6501978	EW42LREDOMDCF	321K1535-2169-496193C2	P5V-GAR0312
6502013	EW42LREDVITOMDCF	321K1536-2169-496193C2	P5V-GAR0614
6502013	EW42LVITCF	321K1536-2169-496193C2	P5V-GAR0614
6502026	EW42LVITOMDCF	321K31	P5V-GAR1214
6502026	EW42ZL71	321K31	P5V-GAR1214
6502037	EW42ZLCF	321K3106	P5V-GAR2414
6502037	EW42ZLMEDCF	321K3106	P5V-GAR2414
6502040	EW42ZLREDCF	321K3106-8993-488980C2	P5V-GAR4216
6502040	EW42ZLVITCF	321K3106-8993-488980C2	P5V-GAR4216
6502061	EW6-1/4B	321K31-8993-481180A2	P5V-GAR7214
6502061	EW6-1/8B	321K31-8993-481180A2	P5V-GAR7214
6502074	EW8-1/4B	321K31-8993-488980C2	P5V-GAV0614
6502074	EX00-M05-10	321K31-8993-488980C2	P5V-GAV0614
6502087	EX00-N08	321K33	P5V-GAV1214
6502087	EX00-S03	321K33	P5V-GAV1214
6502095	EX00-S05	321K3306	P5V-GWV0314
6502095	EX00-S07	321K3306	P5V-GWV0314
6502098	EX01-S17	321K33-8993-488980C2	P5V-GWV0614
6502098	EX310EAKR1200	321K33-8993-488980C2	P5V-GWV0614
6502120	EX310EAKR1201	321K35	P5V-SVVA16K

6502120	EX310EAKR1210	321K35	P5V-SVVA16K
6502343	EX310EAKR1211	321K3501	P60
6502343	EX310EAKR1500	321K3501	P-6000
6502562	EX310EAKR1501	321K3501-8993-488980C2	P-6001
6502562	EX310EAPR1200	321K3501-8993-488980C2	P-6002
6502623	EX310EAPR1201	321K3501-8993-495865C2	P-6003
6502623	EX310EAPR1201	321K3501-8993-495865C2	P-6004
6502666	EX310EAPR1210	321K3506	P-6040
6502666	EX310EAPR1211	321K3506	P-6101
6502692	EX310EAPR1214	321K3506-8993-481180C2	P-6173
6502692	EX310EAPR1500	321K3506-8993-481180C2	P-6177
6502834	EX310EAPR1501	321K3506-8993-488980C2	P-6178
6502834	EX310EAPR1510	321K3506-8993-488980C2	P-6208
6503010	EX310EAPR1511	321K3506-8993-4958653D	P653607
6503010	EX310ERKR1200	321K3506-8993-4958653D	P-6687
6503447	EX310ERPR1211	321K35-482605C2	P-6714
6503447	EX310ERPR1500	321K35-482605C2	P-6719
6503507	EX310ERPR1508	321K35-482606C2	P-6760
6503507	EX310ERPR1509	321K35-482606C2	P-6777
6503522	EX310ESPR1200	321K35-8993-4810450A	P-6909
6503522	EX310ESPR1201	321K35-8993-4810450A	P-6959
6503538	EX310ESPR1500	321K35-8993-4810453D	P6972801
6503538	EX310ESPR1501	321K35-8993-4810453D	P6972801
6504116	EX310ESPR1510	321K35-8993-481045C2	P6A-JS12-005
6504116	EX310EYPR1200	321K35-8993-481045C2	P6A-JS12-005
6504201	EX310USUR1211	321K35-8993-4811803D	P6A-JS13-005
6504201	EX420EAJR1200	321K35-8993-4811803D	P6A-JS13-005
6504211	EX420EAPR1200	321K35-8993-481180A2	P6A-JS14-005
6504211	EX420EAPR1201	321K35-8993-481180A2	P6A-JS14-005
6504368	EX420EAPR1211	321K35-8993-481180C2	P6A-JSB2-005
6504368	EX420EAVR1200	321K35-8993-481180C2	P6A-JSB2-005
6504407	EX420EAVR1201	321K35-8993-481530C2	P6A-JSB3-005
6504407	EX420EAVR1211	321K35-8993-481530C2	P6A-JSB3-005
6504411	EX420EAVR1500	321K35-8993-4889803D	P6A-JSB4-005
6504411	EX420ERPR1200	321K35-8993-4889803D	P6A-JSB4-005
6504418	EX420ERPR1508	321K35-8993-488980A2	P6A-JSH6-005
6504418	EX420ERPR1509	321K35-8993-488980A2	P6A-JSH6-005
6504595	EX420ESPR1200	321K35-8993-488980C2	P6A-JSH8-005
6504595	EX420ESPR1500	321K35-8993-488980C2	P6A-JSH8-005
6504761	EX420ESVR1500	321K35-8993-495865C4	P6A-JSHA-005
6504761	EX420EUPR1200	321K35-8993-495865C4	P6A-JSHA-005
6504802	EX430EAJR1210	321K36	P6A-JSHC-005
6504802	EX430EALR1201	321K36	P6A-JSHC-005
6504834	EX430EALR1210	321K3606	P6C-C4-000
6504834	EX430EALR1211	321K3606	P6C-C4-000
6505211	EX430EAPR1200	321K3606-8993-481180C2	P6C-JS12
6505211	EX430EAPR1211	321K3606-8993-481180C2	P6C-JS12
6505254	EX430EAPR1500	321K36-8993-4811803D	P6C-JS13
6505254	EX430EAPR1501	321K36-8993-4811803D	P6C-JS13
6505257	EX430ERLR1201	321K36-8993-481180A2	P6C-JS14
6505257	EX430ERPR1210	321K36-8993-481180A2	P6C-JS14
6505282	EX430ESFR1510	321K36-8993-481180C2	P6C-JSB2
6505282	EX430ESPR1500	321K36-8993-481180C2	P6C-JSB2

6505315	EX430EUPR1200	321K36-8993-4889803D	P6C-JSB3
6505315	EX430EUPR1500	321K36-8993-4889803D	P6C-JSB3
6505395	EX620EAOR1201	321K36-8993-488980C2	P6C-JSB4
6505395	EX620EAOR1211	321K36-8993-488980C2	P6C-JSB4
6505504	EX620EAOR1500	321K37	P6C-JSH6
6505504	EX620EUOR1500	321K37	P6C-JSH6
6505558	EX620EWOR1211	321K3706	P6C-JSH8
6505558	EX630EAIR1201	321K3706	P6C-JSH8
6505621	EX630EANR1200	321K37-8993-4811803D	P6C-JSHA
6505621	EX630EANR1201	321K37-8993-4811803D	P6C-JSHA
6505699	EX630EANR1211	321K37-8993-481180A2	P6C-JSHC
6505699	EX630EAYR1200	321K37-8993-481180A2	P6C-JSHC
6505773	EX630EAYR1201	321K37-8993-481180C2	P6G-DRA1V10
6505773	EX630EAYR1211	321K37-8993-481180C2	P6G-DRA1V10
6505790	EX630EAYR1500	321K37-8993-488980C2	P6G-EBB1110
6505790	EX630EAYR1510	321K37-8993-488980C2	P6G-EBB1110
6505801	EX630EAYR1511	321K4106	P6G-EPA1140
6505801	EX630ERNR1500	321K4106	P6G-EPA1140
6505859	EX630EVYR1200	321K4106-2995	P6G-ERB1040
6505859	EX820EARR1201	321K4106-2995	P6G-ERB1040
6505873	EX820EARR1204	321K4106-2995-4818653D	P6G-ERB1110
6505873	EX820EARR1211	321K4106-2995-4818653D	P6G-ERB1110
6505876	EX820EAWR1201	321K4106-2995-481865A5	P6G-ERB1140
6505876	EX820EAWR1501	321K4106-2995-481865A5	P6G-ERB1140
6505884	EX820EAWR1507	321K4106-2995-481865C2	P6G-ERB2040
6505884	EX820ERRR1506	321K4106-2995-481865C2	P6G-ERB2040
6505890	EX840EAKR1201	321K4106-2995-481865J3	P6G-ERB2110
6505890	EX840EAQR1201	321K4106-2995-481865J3	P6G-ERB2110
6505935	EX840EAQR1204	321K4106-2995-483510S5	P6G-ERB2140
6505935	EX840ERQR1210	321K4106-2995-483510S5	P6G-ERB2140
6505938	EXACTOL 412-IN	321K4106-2995-495870C2	P6G-ERB2200
6505938	EXACTOL 412-MET	321K4106-2995-495870C2	P6G-ERB2200
6505939	EXACTOL 424-IN	321K4106-4270-4810003D	P6G-FRA1V10
6505939	EXACTOL 424-MET	321K4106-4270-4810003D	P6G-FRA1V10
6505940	EXTRATER	321K4106-4270-481000C2	P6G-HPA1100
6505940	EZ00-315A	321K4106-4270-481000C2	P6G-HPA1100
6505949	EZ08BBA	321K4306	P6G-RPA1100
6505949	EZ08BBA	321K4306	P6G-RPA1100
6505961	F00767-01	321K4306-2995	P6G-TPA1100
6505961	F01-C2-000	321K4306-2995	P6G-TPA1100
6505966	F01-C2-000	321K4306-2995-481865C2	P6M-BAA2
6505966	F03-01-D00	321K4306-2995-481865C2	P6M-BAA2
6506006	F03-01-D00	321K4356-2995-481865C2	P6MC4
6506006	F03-02-D00	321K4356-2995-481865C2	P6MC6
6506029	F03-02-D00	321K4506	P6MC8
6506029	F03-C1-000	321K4506	P6MCB8
6506093	F03-C1-000	321K4506-2995-4818653D	P6ME4
6506093	F03-C1-D00	321K4506-2995-4818653D	P6M-MA13
6506105	F03-C1-D00	321K4506-2995-481865C2	P6M-MA13
6506105	F03-C1-DM0	321K4506-2995-481865C2	P6M-MA14
6506106	F03-C1-DM0	321K4506-2995-482725C2	P6M-MA14
6506106	F03-C1-M00	321K4506-2995-482725C2	P6M-MA14/C001
6506108	F03-C1-M00	321K4506-4270-4810003D	P6M-MA14/C001

6506108	F03-C2-000	321K4506-4270-4810003D	P6M-MA16
6506109	F03-C2-000	321K4506-4270-481000C2	P6M-MA16
6506109	F03-C2-D00	321K4506-4270-481000C2	P6M-MA18
6506134	F03-C2-D00	321K4506-4833713D	P6M-MA18
6506134	F03-C2-DM0	321K4506-4833713D	P6M-PAB1
6506154	F03-C2-DM0	321K4506-483371C2	P6M-PAB1
6506154	F03-C2-M00	321K4506-483371C2	P6M-PAB2
6506159	F03-C2-M00	321K4506-492190C2	P6M-PAB2
6506159	F08-02-SK00	321K4506-492190C2	P6M-PAB3
6506164	F08-02-SK00	321K4506-492190P9	P6M-PAB3
6506164	F08-02-SS00	321K4506-492190P9	P6M-PAB4
6506170	F08-02-SS00	321K4506-495905C2	P6M-PAB4
6506170	F08BBMOT	321K4506-495905C2	P6M-PAB6
6506229	F08-C1-SK00	321K4506-495905F4	P6M-PAB6
6506229	F08-C1-SK00	321K4506-495905F4	P6M-PAB8
06611014	F08-C1-SL00	321K4556	P6M-PAB8
06611020	F08-C1-SL00	321K4556	P6M-PAC5
06611503	F08-C2-SK00	321K4556-2995-481865C2	P6M-PAC5
06611508	F08-C2-SK00	321K4556-2995-481865C2	P6MTB6
06611510	F08-C2-SL00	321K4556-2995-481865J3	P6T-C
06611516	F08-C2-SL00	321K4556-2995-481865J3	P6T-C
06611521	F08-C2-SR00	321K4556-4270-4810003D	P-7005
06636115	F08-C2-SR00	321K4556-4270-4810003D	P-7007
06639114	F08-C2-SS00	321K4606	P-7009
6760004	F08-C2-SS00	321K4606	P-7011
6760010	F1002-31-1	321K4606-2995-481865C2	P-7013
6760041	F1002-31-1	321K4606-2995-481865C2	P-7015
6760042	F101G04WJ	321K4606-2995-482730C2	P-7017
6760044	F101G04WJ	321K4606-2995-482730C2	P-7019
6760047	F1020S	321K4606-2995-483510S6	P701PN0040M180/215/38/80
6760048	F105G06WJR	321K4606-2995-483510S6	P701PN0050M130/165/24/60
6760076	F105G06WJR	321K4606-4270-481000C2	P701PN0070M130/165/24/60
6760079	F11-1413	321K4606-4270-481000C2	P701PN0100M180/215/38/80
6760080	F1200B	321K4606-4538-4810003D	P701PV0070M180/215/38/80
6760081	F1200S	321K4606-4538-4810003D	P-7020
6760082	F1220S	321K4606-4833713D	P-7021
6760083	F12BBGEB	321K4606-4833713D	P-7022
6760084	F12-C2-SK00	321K4606-483371C2	P-7024
6760085	F12-C2-SK00	321K4606-483371C2	P-7028
6760086	F12M2A8151	321K4606-495905C2	P-7030
6760087	F12M4A8418	321K4606-495905C2	P-7032
6760088	F12M4A8504	321K4656	P-7034
6760089	F12M4HR1100	321K4656	P-7040
6760090	F12M4R1100	321K4656-2995-481865C2	P-7044
6760091	F12M4R1301	321K4656-2995-481865C2	P-7046
6760100	F1600B	321K4656-4270-4810003D	P-7048
6760101	F1600S	321K4656-4270-4810003D	P-7050
6760104	F16-02-000	321K4706	P-7052
6760106	F16-02-000	321K4706	P-7054
6760109	F16-02-F00	321K4706-299503-491514C2	P-7056
6760114	F16-02-F00	321K4706-299503-491514C2	P-7058
6760148	F16-03-000	321K4706-2995-4818653D	P-7060
6760149	F16-03-000	321K4706-2995-4818653D	P-7062

6760150	F16-03-F00	321K4706-2995-481865C2	P-7064
6760151	F16-03-F00	321K4706-2995-481865C2	P-7068
6760159	F16-04-000	321K4706-2995-483510S6	P-7072
6760160	F16-04-000	321K4706-2995-483510S6	P-7074
6760177	F16-04-F00	321K4706-495905C2	P-7080
6760193	F16-04-F00	321K4706-495905C2	P-7082
6760219	F16-C2-000	321K4706-495905F4	P-7084
6760220	F16-C2-000	321K4706-495905F4	P-7086
6760224	F16-C2-F00	321K4756	P-7088
6760233	F16-C2-F00	321K4756	P-7094
6760280	F16-C2-FM0	321K4756-2995-481865C2	P-7096
6760303	F16-C2-FM0	321K4756-2995-481865C2	P-7098
6760308	F16-C2-G00	321K4756-2995-4827303D	P712PN0150M130/165/24/58
6760313	F16-C2-G00	321K4756-2995-4827303D	P712PN0250M130/165/24/58
6760325	F16-C2-M00	321K4756-2995-482730C2	P712PN0250M130/165/32/58
6760326	F16-C2-M00	321K4756-2995-482730C2	P712PN0700M095/115/19/40
6760353	F16-C3-000	321K4756-4270-4810003D	P-7301
6760405	F16-C3-000	321K4756-4270-4810003D	P-7303
6760406	F16-C3-F00	321K4756-4833713D	P-7305
6760408	F16-C3-F00	321K4756-4833713D	P-7307
6760415	F16-C3-FM0	32-2 F5OG-S	P-7309
6760416	F16-C3-FM0	32-20 F5OG5-S	P-7311
6760432	F16-C3-G00	32-20 TRLO-S	P-7312
6760433	F16-C3-G00	32-2110AR	P-7317
6760444	F16-C3-M00	32-2110AR	P-7319
6760445	F16-C3-M00	32-24 F5OG5-S	P-7321
6760452	F16-C4-000	32-24 F5OX-S	P-7323
6760463	F16-C4-000	32-24 FTX-S	P-7327
6760472	F16-C4-F00	32-24 MHN-SS	P-7333
6760494	F16-C4-F00	32-24 TRLO-S	P-7335
6760502	F16-C4-FG0	32-24 TRTX-S	P-7337
6760507	F16-C4-FG0	32-24HMK4S	P-7339
6760532	F16-C4-FM0	32-24HMK4SS	P-7343
6760533	F16-C4-FM0	3226 03 00	P-7347
6760536	F16-C4-G00	32-2800B	P-7349
6760542	F16-C4-G00	32-2800T	P-7351
6760543	F16-C4-M00	3229 03 09	P-7353
6760546	F16-C4-M00	322F35	P-7355
6760560	F18-02-SK00	322F35	P-7357
6760569	F18-02-SK00	322F72	P-7363
6760583	F18-04-SG00	322F72	P-7365
6760587	F18-04-SG00	322F7206	P-7367
6760625	F18-04-SH00	322F7206	P-7371
6760632	F18-04-SH00	322F7206-2995-4818653D	P-7373
6760633	F18-04-SK00	322F7206-2995-4818653D	P-7377
6760636	F18-04-SK00	322F7206-2995-481865C2	P-7379
6760638	F18-C2-SG00	322F7206-2995-481865C2	P-7381
6760643	F18-C2-SG00	322F7206-4270-481000C2	P-7382
6760652	F18-C2-SH00	322F7206-4270-481000C2	P-7385
6760653	F18-C2-SH00	322F7206-4270-486265A7	P-7387
6760663	F18-C2-SHL0	322F7206-4270-486265A7	P-7389
6760720	F18-C2-SHL0	322F7206-4270-486265F4	P-7391
6760765	F18-C2-SK00	322F7206-4270-486265F4	P-7393

6760766	F18-C2-SK00	322F7206-4538-486265F4	P-7395
6760774	F18-C2-SKL0	322F7206-4538-486265F4	P-7397
6760775	F18-C2-SKL0	322F7206-8520-486265A5	P-7399
6760787	F18-C2-SL00	322F7206-8520-486265A5	P-7401
6760793	F18-C2-SL00	322F72-2995-481865C2	P-7403
6760800	F18-C3-SGL0	322F72-2995-481865C2	P-7405
6760803	F18-C3-SGL0	322F72-2995-483510S5	P-7407
6760804	F18-C3-SH00	322F72-2995-483510S5	P-7409
6760805	F18-C3-SH00	322G36	P-7409-CE
6760806	F18-C3-SK00	322G36	P-7411
6760809	F18-C3-SK00	322G3606	P-7413
6760810	F18-C3-SKL0	322G3606	P-7413-CE
6760816	F18-C3-SKL0	322G3606-2995-481865C2	P-7415
6760819	F18-C3-SL00	322G3606-2995-481865C2	P-7417
6760820	F18-C3-SL00	322G3610	P-7419
6760822	F18-C4-SGL0	322G3610	P-75
6760835	F18-C4-SGL0	322G3610-2995-4818653D	P-7601
6760858	F18-C4-SH00	322G3610-2995-4818653D	P-7603
6760913	F18-C4-SH00	322G3610-2995-481865C2	P-7605
6760950	F18-C4-SHL0	322G3610-2995-481865C2	P-7607
6760951	F18-C4-SHL0	322G3610-4538-4810004K	P-7609
6760954	F18-C4-SK00	322G3610-4538-4810004K	P-7610
6760957	F18-C4-SK00	322G3610-4538-4810006J	P-7611
6760983	F18-C4-SKL0	322G3610-4538-4810006J	P-7613
6761032	F18-C4-SKL0	322G3610-4538-481000C2	P-7615
6761043	F18-C4-SKR0	322G3610-4538-481000C2	P-7617
6761044	F18-C4-SKR0	322G36-2995	P-7621
6761046	F18-C4-SL00	322G36-2995	P-7623
6761048	F18-C4-SL00	322G37	P-7625
6763001	F-1A1-25	322G37	P-7627
6763033	F2/DIEBOLT	322G3710	P-7629
6763059	F2/PINBOLT	322G3710	P-7631
6763060	F2000S	322G3710-2995-4818653D	P-7633
6763063	F200B	322G3710-2995-4818653D	P-7635
720.0110	F200B4F	322G3710-2995-481865C2	P-7637
720.0120	F200S	322G3710-2995-481865C2	P-7639
720.0210	F200S4F	322G3710-2995-482725C2	P-7641
720.0220	F23-04-000	322G3710-2995-482725C2	P-7643
720.0310	F23-04-000	322G3710-2995-495870A2	P-7645
720.0311	F23-C4-000	322G3710-2995-495870A2	P-7649
720.0320	F23-C4-000	322G37-2995-4818653D	P-7651
720.0321	F23-C4-M00	322G37-2995-4818653D	P-7653
720.0420	F23-C4-M00	322G37-2995-481865C2	P-7655
720.1510	F23PB4-1/8	322G37-2995-481865C2	P-7657
720.1513	F23PB6-1/8	322G38	P-7659
720.1530	F23PB8-1/4	322G38	P-7661
720.1533	F23PB8-1/8	322G3810	P-7663
7491578	F2400S	322G3810	P-7665
7491578	F26-02-000	322G3810-2995-481865C2	P-7667
7491579	F26-02-000	322G3810-2995-481865C2	P-7669
7491579	F26-02-F00	322G38-2995-4818653D	P-7671
7491582	F26-02-F00	322G38-2995-4818653D	P-7673
7491582	F26-02-FM0	322G39-2995-4818653D	P-7674

7491586	F26-02-FM0	322G39-2995-4818653D	P78652
7491586	F26-02-M00	322G40	P78652
7491587	F26-02-M00	322G40	P812PN0150M180/215/38/80
7491587	F26-03-000	322G4010	P812PN0250M180/215/38/80
7491590	F26-03-000	322G4010	P812PN1000M130/165/28/60
7491590	F26-03-F00	322G40-2995-481865C2	P-8225
7491591	F26-03-F00	322G40-2995-481865C2	P-8241
7491591	F26-03-FM0	322G75	P849613
7491592	F26-03-FM0	322G75	P-8504
7491592	F26-04-000	322G7506	P-8559
7491593	F26-04-000	322G7506	P-8560
7491593	F26-04-F00	322G7506-2995-4818653D	P-8713
7491594	F26-04-F00	322G7506-2995-4818653D	P-8715
7491594	F26-04-FM0	322G7506-2995-482725C2	P-8915
7491599	F26-04-FM0	322G7506-2995-482725C2	P-8918
7491599	F26-04-M00	322G7506-4270-481000C2	P-8919
7491602	F26-04-M00	322G7506-4270-481000C2	P-8920
7491602	F26-C2-000	322G7506-4270-481000C7	P-8921
7491604	F26-C2-000	322G7506-4270-481000C7	P-8922
7491604	F26-C2-F00	322G75-2995-4818653D	P-8924
7491607	F26-C2-F00	322G75-2995-4818653D	P-8926
7491607	F26-C2-FM0	322G75-2995-481865C4	P-8927
7491609	F26-C2-FM0	322G75-2995-481865C4	P-8928
7491609	F26-C3-000	322G75-2995-481865J3	P-8929
7491651	F26-C3-000	322G75-2995-481865J3	P-8930
7491651	F26-C3-F00	322G75-4270-4810003D	P-8931
7491654	F26-C3-F00	322G75-4270-4810003D	P-8932
7491654	F26-C3-FG0	322G75-4270-481000C2	P-8933
7491670	F26-C3-FG0	322G75-4270-481000C2	P-8934
7491670	F26-C3-FM0	322H35	P8BPA00MA
7491673	F26-C3-FM0	322H35	P8BPA00MA
7491673	F26-C3-G00	322H7106	P8BPA00MB
7491674	F26-C3-G00	322H7106	P8BPA00MB
7491674	F26-C4-000	322H7106-4270-481000C2	P8C-C
7491679	F26-C4-000	322H7106-4270-481000C2	P8C-C
7491679	F26-C4-D00	322H73	P8C-C26C
7491715	F26-C4-D00	322H73	P8C-C26C
7491715	F26-C4-F00	322H7306	P8C-D
7491743	F26-C4-F00	322H7306	P8C-D
7491743	F26-C4-FG0	322H7306-2995-4818653D	P8C-D21E
7491784	F26-C4-FG0	322H7306-2995-4818653D	P8C-D21E
7491784	F26-C4-FM0	322H7306-2995-481865A2	P8C-D26C
7491827	F26-C4-FM0	322H7306-2995-481865A2	P8C-D26C
7491827	F26-C4-G00	322H7306-4270-4810003D	P8C-D26C-M12
7491920	F26-C4-G00	322H7306-4270-4810003D	P8C-D26C-M12
7491920	F26-C4-M00	322H7306-4270-486265A7	P8C-H
7491945	F26-C4-M00	322H7306-4270-486265A7	P8C-H
7491945	F26-C4-Q27	322H7306-4270-486265B7	P8C-H21E
7491956	F26-C4-Q27	322H7306-4270-486265B7	P8C-H21E
7491956	F28-03-SK00	322H7306-852023-483824T1	P8C-H21G
7491957	F28-03-SK00	322H7306-852023-483824T1	P8C-H21G
7491957	F28-04-SK00	322H7306-876024-483824T1	P8C-H26C
7491959	F28-04-SK00	322H7306-876024-483824T1	P8C-H26C

7491959	F28-04-SKL0	322H7306-8760-483824T1	P8C-H36C
7491961	F28-04-SKL0	322H7306-8760-483824T1	P8C-H36C
7491961	F28-04-SL00	322H73-2995-4818653D	P8C-MC06B
7491964	F28-04-SL00	322H73-2995-4818653D	P8C-MC06B
7491964	F28-06-SH00	322H75	P8C-MC12BP
7492215	F28-06-SH00	322H75	P8C-MC12BP
7492215	F28-06-SK00	322H7506	P8CS0803J
7492321	F28-06-SK00	322H7506	P8CS0803J
7492321	F28-C3-SK00	322H7506-2995	P8CS1204J
7496252	F28-C3-SK00	322H7506-2995	P8CS1204J
7866907	F28-C4-SG00	322H7506-2995-4818653D	P8CS1205AA
8090661	F28-C4-SG00	322H7506-2995-4818653D	P8CS1205AA
8090661	F28-C4-SH00	322H7506-2995-481865A9	P8CS1205AB
8111000	F28-C4-SH00	322H7506-2995-481865A9	P8CS1205AB
8111000	F28-C4-SH00-07	322H7506-2995-481865C2	P8CS1205BB
8111040	F28-C4-SH00-07	322H7506-2995-481865C2	P8CS1205BB
8111040	F28-C4-SK00	322H7506-2995-481865J3	P8C-S1205R
8111045	F28-C4-SK00	322H7506-2995-481865J3	P8C-S1205R
8111045	F28-C4-SKL0	322H7506-2995-483510S5	P8CS7805AA
8111046	F28-C4-SKL0	322H7506-2995-483510S5	P8CS7805AA
8111046	F28-C4-SKR0	322H7506-2995-483510S6	P8CSY1212A
8111047	F28-C4-SKR0	322H7506-2995-483510S6	P8CSY1212A
8111047	F28-C4-SL00	322H7506-4270-4810003D	P8FC8
8140510	F28-C4-SL00	322H7506-4270-4810003D	P8L/3002373
8140510	F28-C4-SL00-07	322H7506-4270-4810004K	P8L/3002373
8171355	F28-C4-SL00-07	322H7506-4270-4810004K	P8L/3002374
8171355	F28-C4-SLL0	322H7506-4270-4810005P	P8L/3002374
008240109	F28-C4-SLL0	322H7506-4270-4810005P	P8L-C2
008240109	F28-C6-SG00	322H7506-4270-4810006J	P8L-C2
9109001	F28-C6-SG00	322H7506-4270-4810006J	P8L-C221E
9109001	F28-C6-SGL0	322H7506-4270-481000C2	P8L-C221E
9109004	F28-C6-SGL0	322H7506-4270-481000C2	P8L-C226C
9109004	F28-C6-SH00	322H7506-4270-481000C5	P8L-C226C
9109007	F28-C6-SH00	322H7506-4270-481000C5	P8L-C5
9109007	F28-C6-SHL0	322H7506-4270-483824P8	P8L-C5
9109009	F28-C6-SHL0	322H7506-4270-483824P8	P8L-C521E
9109009	F28-C6-SK00	322H7506-4270-486265A7	P8L-C521E
9109010	F28-C6-SK00	322H7506-4270-486265A7	P8L-CA26C
9109010	F28-C6-SKL0	322H7506-4270-486265C1	P8L-CA26C
9109011	F28-C6-SKL0	322H7506-4270-486265C1	P8L-H236C
9109011	F28-C6-SL00	322H7506-4270-486265F4	P8L-H236C
9109014	F28-C6-SL00	322H7506-4270-486265F4	P8L-H536C
9109014	F28PB4M5	322H7506-4270-486265S2	P8L-H536C
9109017	F28PB6M5	322H7506-4270-486265S2	P8L-HA36C
9109017	F28PMB4M5	322H7506-4538-4810000A	P8L-HA36C
9109021	F28PMB6M5	322H7506-4538-4810000A	P8L-MC04A2A-M12
9109021	F3/08801002	322H7506-4538-4810004K	P8L-MC04A2A-M12
9109024	F3/08801004	322H7506-4538-4810004K	P8L-MC19A5
9109024	F3/08801008	322H7506-4538-4810005P	P8L-MC19A5
9109031	F3/2SV5E1WXG24	322H7506-4538-4810005P	P8L-MC19A9
9109031	F3/4184	322H7506-4538-4810006J	P8L-MC19A9
9109041	F3/BACKWHEEL	322H7506-4538-4810006J	P8L-MD25A5
9109041	F3/COOLERKIT	322H7506-4538-481000C1	P8L-MD25A5

9109044	F3/DIECLAMP	322H7506-4538-481000C1	P8L-MD25A9B
9109044	F3/DIECLAMPSPRING12	322H7506-4538-481000C2	P8L-MD25A9B
9109051	F3/DIECLAMPSPRING8	322H7506-4538-481000C2	P8L-MD25ACB
9109051	F3/DIEHOLDER	322H7506-4538-481044A9	P8L-MD25ACB
9109061	F3/DIEHOLDER09	322H7506-4538-481044A9	P8LMH20M2A
9109061	F3/DIEHOLDER10	322H7506-4538-483520S6	P8LMH20M2A
9109064	F3/DIEHOLDER-G	322H7506-4538-483520S6	P8LMH20M5A
9109064	F3/DIEHOLDERTRAY	322H7506-4538-486265F4	P8LMH20M5A
9109069	F3/DIEKIT	322H7506-4538-486265F4	P8LMH20M5R
9109069	F3/DIESCREW	322H7506-492190C2	P8LMH20M5R
9109088	F3/DOORHINGE	322H7506-492190C2	P8LMH20M9A
9109088	F3/DOORLOCK	322H7506-492190P2	P8LMH20M9A
9109090	F3/DOORSPRING	322H7506-492190P2	P8LMH20M9R
9109090	F3/DSH081NRD024LD	322H7506-492190P9	P8LMH20M9R
9109091	F3/F523030BB3C	322H7506-492190P9	P8LMH25B9A
9109091	F3/FOOTSWITCH	322H75-2995-481865A2	P8LMH25B9A
9109092	F3/FORKGUIDE	322H75-2995-481865A2	P8LMH25M3A
9109092	F3/FRONTCOUNTER	322H75-2995-481865C2	P8LMH25M3A
9109093	F3/FRONTWHEEL	322H75-2995-481865C2	P8LMH25M9A
9109093	F3/HEADCOVER	322H75-4270-481000C2	P8LMH25M9A
9109095	F3/HOSE	322H75-4270-481000C2	P8LS08L226C
9109095	F3/INITIATORKIT	322H75-4270-486265C2	P8LS08L226C
9109096	F3/OFFSWITCH	322H75-4270-486265C2	P8LS08L526C
9109096	F3/ONSWITCH	322H75-483371C2	P8LS08L526C
9109100	F3/PINHOLDER	322H75-483371C2	P8LS08L926C
9109100	F3/PINHOLDERTRAY	322K4106	P8LS08L926C
9109146	F3/RESETSWITCH	322K4106	P8LS12JACK
9109146	F3/STARTSWITCH	322K4106-2995	P8LS12JACK
9109148	F3/STICKERCRANE	322K4106-2995	P8MC12
9109148	F3/STICKERFORK	322K4306	P8MC6
9109150	F3/STICKERINSTRUC	322K4306	P8MC8
9109150	F3/STICKERLUB	322K4306-2995-481865C2	P8ME12
9109153	F3/STICKERPARKER	322K4306-2995-481865C2	P8ME6
9109153	F3/STOPSWITCH	322K4306-4538-481000C2	P8ME8
9109154	F3/TOOLTRAYDOOR	322K4306-4538-481000C2	P8MEB8
9109154	F3/TOOLTRAYIN	322K4506	P8S-A34X
9109156	F3/TOOLTRAYPIN	322K4506	P8S-A34X
9109156	F3/TOPTRAY	322K4506-2995-481865C2	P8S-AMA1
9109169	F30-06-000	322K4506-2995-481865C2	P8S-AMA1
9109169	F30-06-000	322K4506-495905F4	P8S-DPFLX
9109171	F30-06-F00	322K4506-495905F4	P8S-DPFLX
9109171	F30-06-F00	322K4606	P8S-DPSHX
9109177	F30-06-FM0	322K4606	P8S-DPSHX
9109177	F30-06-FM0	322K4606-2995-481865C2	P8S-DRFLX
9109190	F30-06-M00	322K4606-2995-481865C2	P8S-DRFLX
9109190	F30-06-M00	322K4706	P8S-DRSHX
9109191	F30-08-000	322K4706	P8S-DRSHX
9109191	F30-08-000	322K4706-299503-491514C2	P8S-GCFPX
9109192	F30-08-DF0	322K4706-299503-491514C2	P8S-GCFPX
9109192	F30-08-DF0	322K4706-2995-481865C2	P8S-GMSHX
9109198	F30-08-F00	322K4706-2995-481865C2	P8S-GMSHX
9109198	F30-08-F00	323-00015-8	P8S-GNFLX
9109211	F30-08-FG0	32-32 CBZ-SS	P8S-GNSHX

9109211	F30-08-FG0	32-32 EBZ-SS	P8S-GNSHX
9109214	F30-08-FM0	32-32 FBZ-SS	P8S-GPCCX
9109214	F30-08-FM0	32-32 HBZ-SS	P8S-GPCCX
9109221	F30-08-M00	32-32 MHN-SS	P8S-GPCHX
9109221	F30-08-M00	32-32-32 JBZ-SS	P8S-GPCHX
9109224	F3-01-050	323-82004-0	P8S-GPFAX
9109224	F3-01-050	323-82010-0	P8S-GPFAX
9109241	F30-C6-000	323-82014-0	P8S-GPFLX
9109241	F30-C6-000	324-21208-0	P8S-GPFLX
9109244	F30-C6-F00	324-21210-0	P8S-GPFLX/EX
9109244	F30-C6-F00	324-21612-0	P8S-GPFLX/EX
9109250	F30-C6-FM0	324-22016-0	P8S-GPFTX
9109250	F30-C6-FM0	324-30019-0	P8S-GPFTX
9109251	F30-C6-M00	324-30020-0	P8S-GPMHX
9109251	F30-C6-M00	3246FIL	P8S-GPMHX
9109261	F30-C8-000	3246FIL	P8S-GPSCX
9109261	F30-C8-000	3247FIL	P8S-GPSCX
9109269	F30-C8-DF0	3247FIL	P8S-GPSHX
9109269	F30-C8-DF0	3248.1	P8S-GPSHX
9109271	F30-C8-DFM	3248FIL	P8S-GQFAX
9109271	F30-C8-DFM	3248FIL	P8S-GQFAX
9109288	F30-C8-DM0	3249FIL	P8S-GQFDX
9109288	F30-C8-DM0	3249FIL	P8S-GQFDX
9109289	F30-C8-F00	3251FIL	P8S-GQFLX
9109289	F30-C8-F00	3251FIL	P8S-GQSHX
9109290	F30-C8-FM0	325-20140-0	P8S-GQSHX
9109290	F30-C8-FM0	3255FIL	P8S-GRFLX
9109292	F30-C8-M00	3255FIL	P8S-GRFLX
9109292	F30-C8-M00	3257FIL	P8S-GRFLX2
9109293	F30-C8-Q72	3257FIL	P8S-GRFLX2
9109293	F30-C8-Q72	3259FIL	P8S-GRFTX
9109295	F31G01AA	3259FIL	P8S-GRFTX
9109295	F31G01AA	3266 03 04	P8S-GRSHX
9109304	F31G02AH	3267-00120	P8S-GRSHX
9109304	F31G02AH	3267-00120	P8S-GSCCX
9109400	F31G02DH	3267-00800	P8S-GSCCX
9109400	F31G02DH	3267-00800	P8S-GSFLX
9109401	F3200S	3267-01260	P8S-GSFLX
9109401	F3-20-500	3267-01260	P8S-GSFLX/T1
9109402	F3-20-500	3267-01350	P8S-GSFLX/T1
9109402	F33-06-000	3267-01350	P8S-GSFTX
9109509	F33-06-000	3268-01260	P8S-GSFTX
9109509	F33-C6-000	3268-01260	P8S-GSMCX
9109510	F33-C6-000	3274FIL	P8S-GSMCX
9109510	F33-C6-M00	3274FIL	P8S-GSMHX
9878026	F33-C6-M00	3275FIL	P8S-GSMHX
9878026	F33-C8-000	3275FIL	P8S-GSSCX
9878034	F33-C8-000	32-7800F	P8S-GSSCX
9878034	F33-C8-M00	32-7800F	P8S-GSSHX
011960109	F33-C8-M00	3278FIL	P8S-GSSHX
011960109	F34-08-000	3278FIL	P8S-SPELXD
0012000470	F34-08-000	328075X	P8S-SPELXD
0012000522	F35-0B-000	3281 03 09	P8S-SPTHXD

012233002	F35-0B-000	3281 03 19	P8S-SPTHXD
012233003	F35-0B-F00	328170-101X	P8S-SPTHZ
012233004	F35-0B-F00	328170-113X	P8S-SPTHZ
012233005	F35-0C-000	328170-115X	P8S-SRELX
012233006	F35-0C-000	328170-155X	P8S-SRELX
012233007	F35-0C-F00	328170-179X	P8S-SRTHX
012233008	F35-0C-F00	328170-1X	P8S-SRTHX
012233009	F35-CB-000	328170-76X	P8S-TMA0X
012233010	F35-CB-000	328170-8X	P8S-TMA0X
012233011	F35-CB-F00	328170-94X	P8S-TMC01
012233012	F35-CB-F00	328170-99X	P8S-TMC01
012233014	F35-CC-000	328273X	P8S-TMC02
012233017	F35-CC-000	328274X	P8S-TMC02
012233018	F35-CC-F00	328297-3X	P8S-TMC03
012233019	F35-CC-F00	3-2829S	P8S-TMC03
0013000315	F35G02AG	328346-10X	P8S-TNFLX
0013000338	F35G02AG	328346-15X	P8S-TNFLX
0013002158	F35G02AH	328356-11X	P8S-TPFLX
0013003413	F35G02AH	328356-13X	P8S-TPFLX
0014000340	F35G02DH	328356-15X	P8TUB8
0014001086	F35G02DH	328356-21X	P8V-AR26H
14166196	F37-124-50X3.0TFCF	328356-22X	P8V-AR26H
14168007	F37-124-50X3.0TFVCF	328356-2X	P8V-CR24F
14370249	F37-124-CFX	328356-54X	P8V-CR24F
014439000	F37-124-SSX	328380X	P8V-CR24J
014440001	F37-132-60X3.0TFCF	328481X	P8V-CR24J
15036043	F37-132-60X3.0TFSS	328564X	P8V-CR26C
15036116	F37-132-60X3.0TFVCF	328591-16X	P8V-CR26C
15037056	F37-132-60X3.0TFVSS	328676X	P-9339
15037614	F37-132-CFX	328723X	P-9416
15038169	F37-132-SSX	328799-3X	P-9428
15038170	F37-140-75X3.0TFCF	328803-1X	P-9491
15038365	F37-140-75X3.0TFVCF	328803-2X	P-9508
15038366	F37-140-CFX	328864X	P-9543
15039574	F37-140-SSX	328948-5X	P-9590
15039576	F37-148-90X3.5TFVCF	328948-6X	P-9591
015094018	F37-148-90X3.5TTCF	328948-8X	P-9732
015094022	F37-148BFVCF	328948-9X	P9732PUR10
015094060	F37-148-CFX	328971X	P9732PVC02
015094117	F37-164-CFX	328992X	P9732PVC05
0017000833	F37-164-SSX	329006-1X	P9732PVC10
20000167	F37-180141.3-CFX	329014-3X	P-9733
20000177	F37-180-CFX	329024-24X	P-9738
20000407	F37-196-CFX	329043-6X	P-9739
20000621	F37-308-CFX	329071-19X	P-9766
20000831	F37-310-75X5.0-FT-CF	329071-1X	P-9797
20000832	F37-310-75X5.0-OV-CF	329071-20X	P-9798
20000840	F37-312-30X4.0TFCF	329071-28X	P-9813
20000841	F37-312-30X4.0TFVCF	329071-33X	P-9822
20000842	F37-312-30X4.0TTCF	329071-36X	P-9901
20000843	F37-312-CFX	329071-37X	P-9930-D
20000860	F37-316-38X3.0TFBCF	329071-4X	P-9943
20000990	F37-316-38X3.0TTCF	329071-6X	P-9944

20001317	F37-316-38X4.0TFBCF	329075-1X	P-9945
20001318	F37-316-38X4.0TFVSS	329075-2X	P-9946
20001319	F37-316-38X4.0TTCF	329075-3X	P-9961
20001330	F37-316-38X5.0TFBCF	329088X	PA040/025/02
20001332	F37-316-38X5.0TTCF	329101X	PA040/025/03
20003372	F37-316BFVCF	329129-1X	PA040/050/02
20003383	F37-316-CFX	329130-1X	PA040/050/03
20003440	F37-316-SSX	329130-2X	PA040/100/03
20003442	F37-320-30X4.0TFCF	329130-3X	PA047/025/00
20003445	F37-320-30X4.0TFVCF	329130-4X	PA047/025/01
20003860	F37-320-38X3.0TFBCF	329130-5X	PA047/025/02
20003998	F37-320-38X3.0TTCF	329130-8X	PA047/025/03
20004179	F37-320-38X4.0TFBCF	329130-9X	PA047/050/03
20004487	F37-320-38X4.0TFVCF	329141-1X	PA060/025/00
20004525	F37-320-38X4.0TTCF	329144-1X	PA060/025/01
20004864	F37-320-38X5.0TFBCF	329145-24X	PA060/025/02
20004981	F37-320-38X5.0TTCF	329150X	PA060/025/03
20005119	F37-320-42X3.0TFBCF	329179-1X	PA060/050/02
20005258	F37-320-42X3.0TTCF	329237-24X	PA060/050/03
20005298	F37-320-42X4.0TFBCF	3293 03 09	PA060/100/02
20005502	F37-320-42X4.0TTCF	3293 03 19	PA060/100/03
20005547	F37-320BFVCF	329337-2X	PA080/025/00
20005604	F37-320-CFX	329352-24X	PA080/025/01
20005606	F37-320-SSX	329361-1X	PA080/025/02
20005607	F37-320T-CFX	329361X	PA080/025/03
20005746	F37-324-38X4.0TFVCF	329392X	PA080/050/02
20005798	F37-324-42X3.0TFBCF	329403X	PA080/050/03
20005850	F37-324-42X3.0TTCF	329442-24X	PA080/100/03
20005956	F37-324-42X4.0TFBCF	329463-24X	PA100/025/00
20005957	F37-324-42X4.0TTCF	329647-1X	PA100/025/02
20005958	F37-324-50X3.0TFBCF	329659X	PA100/025/03
20005959	F37-324-50X3.0TTCF	3298 03 09	PA10018
20005960	F37-324-50X5.0TFBCF	3298 03 19	PA10018
20005961	F37-324-50X5.0TFCF	3299 03 09	PA10019
20005962	F37-324-50X5.0TFVCF	3299 03 19	PA10019
20005963	F37-324-50X5.0TTCF	32AP1CF	PA10019
20005964	F37-324-50X6.0TFBCF	32AP1SS	PA10019
20005966	F37-324-50X6.0TFCF	32AP2CF	PA10020
20006115	F37-324-50X6.0TTCF	32BF32-316	PA10020
20006276	F37-324BFVCF	32BLEN32-316	PA10024
20006332	F37-324-CFX	32BLP32-316	PA10024
20006561	F37-324FB90CF	32CPM1CF	PA10206
20006777	F37-324-SAMPLE	32CPM1SS	PA10206
20006780	F37-324-SSX	32CPM2CF	PA10206
20006790	F37-324T-CFX	32CPM2SS	PA10206
20006809	F37-332-50X3.0TFBCF	32EE32-316	PA10207
20007128	F37-332-50X3.0TFBSS	32ET32-316	PA10207
20007222	F37-332-50X3.0TFSS	32F3MK4S	PA10207
20007264	F37-332-50X3.0TFVSS	32F42EDMXSS	PA10207
20007439	F37-332-50X3.0TTCF	32FF32-316	PA10230
20007536	F37-332-50X3.0TTSS	32FNMK4S	PA10230
20007645	F37-332-50X5.0TFBCF	32FSC32N-316	PA10231
20007646	F37-332-50X5.0TTCF	32G5Q1BSXK	PA10231

20007647	F37-332-50X6.0TFBCF	32HMK4S	PA10231
20007919	F37-332-50X6.0TTCF	32HMK4SS	PA10231
20010275	F37-33-25X2.5-O-CF	32MSC32N-316	PA10232
20010317	F37-332-60X3.0TFBCF	32MSEL32N-316	PA10232
20010445	F37-332-60X3.0TFBSS	32NU32-316	PA10233
20011365	F37-332-60X3.0TFCF	32-P-129	PA10233
20011366	F37-332-60X3.0TFSS	32PD105QBM3KG201	PA10233
20011367	F37-332-60X3.0TFVSS	32PD110QBT1KG201	PA10233
20011368	F37-332-60X3.0TTCF	32PD120CBT1KG202	PA10235
20011369	F37-332-60X3.0TTSS	32PD120QBM3KG201	PA10235
20011370	F37-332-60X5.0TFBCF	32PD205QBM3KG201	PA10235
20011371	F37-332-60X5.0TFBSS	32PD210QBM3KG201	PA10235
20011381	F37-332-60X5.0TFCF	32PD210QBT1KG201	PA10263
20011434	F37-332-60X5.0TFSS	32PD210QHBT1MR242	PA10263
20011436	F37-332-60X5.0TFVCF	32PD220QBM3KG201	PA10263
20011437	F37-332-60X5.0TFVSS	32PD220QBT1KG201	PA10263
20011438	F37-332-60X5.0TTCF	32PD220QBT1KR241	PA10264
20011443	F37-332-60X5.0TTSS	32PD220QBT1MR241	PA10264
20011846	F37-332-60X6.0TFBCF	32PD220QHBM3KG202	PA10265
20011879	F37-332-60X6.0TFVCF	32PD274WBPKG201S08	PA10265
20011958	F37-332-60X6.0TTCF	32PMQ2CF	PA10265
20012017	F37-332BFVCF	32PNMK4S	PA10265
20012624	F37-332-CFX	32PNMK4SS	PA10266
20012741	F37-332FB90CF	32PSR-101010121	PA10266
20013109	F37-332-SSX	32PSR-101020121	PA10267
20013256	F37-33T-25X2.5-O-CF	32PSR-102020121	PA10267
20013521	F37-340-60X3.0TFBCF	32SC32-316	PA10268
20013544	F37-340-60X3.0TTCF	32SFAK13SXZ	PA10268
20013545	F37-340-60X5.0TFBCF	32SFAK17SXZ	PA10268
20013698	F37-340-60X5.0TTCF	32SFAK21SXZ	PA10268
20013701	F37-340-60X6.0TFBCF	32SFAK26SXZ	PA10269
20013702	F37-340-60X6.0TTCF	32SFIW13SXZ	PA10269
20013805	F37-34073-CFX	32SFIW17SXZ	PA10269
20013854	F37-34073-SSX	32SFIW21SXZ	PA10269
20013921	F37-340-73X7.0TFBCF	32SFIW26SXN	PA10270
20013963	F37-340-73X7.0TFVCF	32SFTF06SXZ	PA10270
20013964	F37-340-73X7.0TTCF	32SFTF08SXZ	PA10271
20014069	F37-340-75X3.0TFBCF	32SFTF10SXZ	PA10271
20014070	F37-340-75X3.0TTCF	32SFTF13SXZ	PA10272
20014156	F37-340-75X5.0TFBCF	32SFTF16SXZ	PA10272
20014321	F37-340-75X5.0TTCF	32SFTF19SXZ	PA10272
20014422	F37-340BFVCF	32WB1Q1PSX	PA10272
20014511	F37-340-CFX	3-3 EBZ-SS	PA10273
20014576	F37-340FB90CF	3-3 HBZ-B	PA10273
20014577	F37-340-SSX	3-3 HBZ-SS	PA10274
20014684	F37-340T-CFX	3-3 WBZ-SS	PA10274
20014737	F37-348-75X3.0TFBCF	3-3 ZHBA5-SS	PA10275
20014785	F37-348-75X3.0TFCF	3300 04 00	PA10275
20014972	F37-348-75X3.0TTCF	3300 06 00	PA10276
20014973	F37-348-75X5.0TFBCF	3300 08 00	PA10276
20014974	F37-348-75X5.0TTCF	3301 04 00	PA10276
20014975	F37-348905FB90CF	3301 06 00	PA10276
20014976	F37-348-90X3.5TFBCF	330-1552	PA10277

20014977	F37-348-90X3.5TTCF	330-1560	PA10277
20014978	F37-348-90X5.0TFBCF	3303 00 01	PA10277
20014979	F37-348-90X5.0TFCF	3304 06 04	PA10277
20014980	F37-348-90X5.0TFVCF	3304 08 04	PA10278
20014982	F37-348-90X5.0TTCF	3304 08 06	PA10278
20014984	F37-348-90X9.0TFBCF	3304 10 06	PA10278
20015001	F37-348-90X9.0TTCF	3304 10 08	PA10278
20015002	F37-348BFVCF	3306 06 04	PA10293
20015003	F37-348-CFX	3306 08 04	PA10293
20015004	F37-348-SSX	3306 08 06	PA10293
20015005	F37-36-38X3.0-O-CF	3306 10 06	PA10293
20015006	F37-364BFVCF	3306 10 08	PA10294
20015007	F37-36T-38X3.0-O-CF	3307FIL	PA10294
20015008	F37-380-CFX	3307FIL	PA10294
20015099	F37-432-60X5.0TFBCF	3308-00300	PA10294
20015167	F37-432-60X6.0TFBCF	3308-00300	PA10294ATEX
20015168	F37-432-CFX	3308-01137	PA10294ATEX
20015170	F37-432-SSX	3308-01137	PA10295
20015171	F37-44073-CF	3308-01267	PA10295
20015172	F37-440-73X7.0TFBCF	3308-01267	PA10295
20015173	F37-440-75X5.0TFBCF	3310 04 13	PA10295
20015301	F37-440BFVCF	3310 06 13	PA10295ATEX
20015671	F37-440-CFX	3310 08 17	PA10295ATEX
20015954	F37-440-SSX	3310 10 21	PA10296
20015962	F37-448909-CF	3310 12 21	PA10296
20015963	F37-448-90X3.5TFCF	3311 10 13 02	PA10296
20015998	F37-448-90X3.5TFVCF	3311 10 13 03	PA10296
20016116	F37-448-90X5.0TFBCF	3311 10 13 04	PA10297-0033
20016117	F37-448BFVCF	3311 10 13 05	PA10297-0033
20016118	F37-448-CFX	3311 10 13 06	PA10297-0033-00
20016131	F37-448-SSX	3311 13 17 02	PA10297-0033-00
20016197	F37-464BFVCF	3311 13 17 03	PA10297-0211-92
20016199	F37-608-CFX	3311 13 17 04	PA10297-0211-92
20016265	F37-608T-CFX	3311 13 17 05	PA10297-0233
20016276	F37-612-30X4.0TFVCF	3311 13 17 06	PA10297-0233
20016357	F37-612-CFX	3311 19 10 07	PA10297-0233
20016360	F37-612T-CFX	3312 00 10	PA10297-0233
20016375	F37-616-38X3.0TFBCF	3312 00 13	PA10297-0233-00
20016403	F37-616-38X3.0TTCF	3312 00 17	PA10297-0233-00
20016456	F37-616-38X4.0TFBCF	3312 00 19	PA10297-0233-90
20016563	F37-616-38X4.0TFSS	3312 00 21	PA10297-0233-90
20016578	F37-616-38X4.0TTCF	3313 10 13 02	PA10297-0233-91
20016582	F37-616-38X5.0TFBCF	3313 10 13 03	PA10297-0233-91
20016587	F37-616-38X5.0TTCF	3313 10 13 04	PA10297-0233-92
20016588	F37-616BFVCF	3313 10 13 05	PA10297-0233-92
20016678	F37-616-CFX	3313 13 17 02	PA10297-1333
20016688	F37-616-SSX	3313 13 17 03	PA10297-1333
20016791	F37-616T-CFX	3313 13 17 04	PA10297-1433
20016813	F37-620/38-CFX	3313 13 17 05	PA10297-1433
20016820	F37-620-30X3.0TTCF	3313 13 21 03	PA10297-4533ATEX
20016841	F37-620-30X4.0TFCF	3313 13 21 04	PA10297-4533ATEX
20016843	F37-620-30X4.0TFVCF	3313 13 21 05	PA10297-4633ATEX
20016873	F37-620-30X4.0TTCF	331B02	PA10297-4633ATEX

20016878	F37-620-38X3.0TFBCF	331B02	PA10297-4733ATEX
20016879	F37-620-38X3.0TTCF	331B0216-4270-481000C2	PA10297-4733ATEX
20016880	F37-620-38X4.0TFBCF	331B0216-4270-481000C2	PA10297-4833ATEX
20016917	F37-620-38X4.0TTCF	331B02-2995-4818653D	PA10297-4833ATEX
20016946	F37-620-38X5.0TFBCF	331B02-2995-4818653D	PA10297-5133
20016947	F37-620-38X5.0TFVCF	331B02-2995-481865C2	PA10297-5133
20016984	F37-620-38X5.0TTCF	331B02-2995-481865C2	PA10297-5733
20017012	F37-620-42X3.0TFBCF	331B02-2995-495870C2	PA10297-5733
20017013	F37-620-42X3.0TTCF	331B02-2995-495870C2	PA10297-6111-89
20017025	F37-620-42X4.0TFBCF	331B02-4270-4810004K	PA10297-6111-89
20017032	F37-620-42X4.0TFCF	331B02-4270-4810004K	PA10297-6133
20017033	F37-620-42X4.0TFVCF	331B02-4270-481000C2	PA10297-6133
20017063	F37-620-42X4.0TTCF	331B02-4270-481000C2	PA10297-6133-89
20017064	F37-620-CFX	331B31	PA10297-6133-89
20070131	F37-620-SSX	331B31	PA10297-9533ATEX
20070174	F37-620T-CFX	331B31-2995-481865C2	PA10297-9533ATEX
20070205	F37-624-38X5.0TFCF	331B31-2995-481865C2	PA10297-9733ATEX
20070233	F37-624-38X5.0TFVCF	331B31-2995-482725C2	PA10297-9733ATEX
20070250	F37-624-38X5.0TTCF	331B31-2995-482725C2	PA10297-9833ATEX
20070345	F37-624-42X3.0TFBCF	331B7490	PA10297-9833ATEX
20070346	F37-624-42X3.0TFCF	331B7490	PA10298-0033
20070347	F37-624-42X3.0TFVCF	331B7490-2995-48358001N7	PA10298-0033
20070348	F37-624-42X3.0TTCF	331B7490-2995-48358001N7	PA10298-0033-00
20070465	F37-624-42X4.0TFBCF	331B7490-48866001N7	PA10298-0033-00
20070476	F37-624-42X4.0TFCF	331B7490-48866001N7	PA10298-0233
20070484	F37-624-42X4.0TFVCF	331N03	PA10298-0233
20070566	F37-624-42X4.0TTCF	331N03	PA10298-0233
20070590	F37-624-50X5.0TFBCF	331N03-496131C2	PA10298-0233
20070608	F37-624-50X5.0TFCF	331N03-496131C2	PA10298-0233-00
20070609	F37-624-50X5.0TFVCF	331N03-496131C4	PA10298-0233-00
20070649	F37-624-50X5.0TTCF	331N03-496131C4	PA10298-5133
20070650	F37-624-50X6.0TFBCF	331N03-496131P9	PA10298-5133
20070662	F37-624-50X6.0TFCF	331N03-496131P9	PA10298-6133
20070683	F37-624-50X6.0TFVCF	331N04-496482C2	PA10298-6133
20070711	F37-624-50X6.0TTCF	331N04-496482C2	PA10298-6133
20070712	F37-624BFVCF	3320 04 00 02	PA10298-6133
20070835	F37-624-CFX	3320 04 00 04	PA10298-9533ATEX
20070861	F37-624-SSX	3320 04 00 07	PA10298-9533ATEX
20070862	F37-624T-CFX	3320 04 00 12	PA10299-0233
20070899	F37-632-50X5.0TFBCF	3320 06 00 02	PA10299-0233
20070928	F37-632-50X5.0TFSS	3320 06 00 04	PA10299-6133
20070987	F37-632-50X5.0TFVCF	3320 06 00 07	PA10299-6133
20071024	F37-632-50X5.0TFVSS	3320 08 00 02	PA10300-0033-00
20071026	F37-632-50X5.0TTCF	3321 04 00 02	PA10300-0033-00
20071042	F37-632-50X6.0TFBCF	3321 04 00 04	PA10300-0233
20071065	F37-632-50X6.0TFCF	3321 04 00 07	PA10300-0233
20071078	F37-632-50X6.0TFVCF	3321 04 00 12	PA10300-0233-00
20071162	F37-632-50X6.0TTCF	3321 06 00 02	PA10300-0233-00
20071226	F37-632-60X5.0TFBCF	3321 06 00 04	PA10300-0233-90
20071245	F37-632-60X5.0TFCF	3321 06 00 07	PA10300-0233-90
20071369	F37-632-60X5.0TFVCF	3321 08 00 02	PA10300-0233-92
20071417	F37-632-60X5.0TTCF	3323FIL	PA10300-0233-92
20071508	F37-632-60X6.0TFBCF	3323FIL	PA10300-4533ATEX

20071536	F37-632-60X6.0TFVCF	3324FIL	PA10300-4533ATEX
20071542	F37-632-60X6.0TTCF	3324FIL	PA10301-0233
20071577	F37-632BFVCF	3327FIL	PA10301-0233
20071585	F37-632-CFX	3327FIL	PA10307
20071646	F37-632-SSX	3329 00 01	PA10307
20071691	F37-632T-CFX	3329 00 02	PA10307
20071712	F37-640-75X5.0TFCF	3329 00 03	PA10307
20071713	F37-640-75X5.0TFVCF	3329FIL	PA10308
20071730	F37-640-75X5.0TTCF	3329FIL	PA10308
20071787	F37-640-CFX	332B02	PA10308
20071800	F37S12X	332B02	PA10308
20071801	F37S16X	332B02-2995-4818653D	PA10309
20071802	F37S20X	332B02-2995-4818653D	PA10309
20071803	F37S24X	332B02-4270-4810003D	PA10310
20071804	F37S32X	332B02-4270-4810003D	PA10310
20071815	F37S40X	3-3-3 JBZ-B	PA10310ATEX
20071816	F37S48X	3330 04 00	PA10310ATEX
20071840	F39-08-SL00	3330 04 01	PA10311
20071972	F39-08-SL00	3330 04 04	PA10311
20071978	F39-C6-SH00	3330 04 06	PA10311
20072006	F39-C6-SH00	3330 06 00	PA10311
20072108	F39-C6-SL00	3330 06 01	PA10311ATEX
20072113	F39-C6-SL00	3330 06 04	PA10311ATEX
20072208	F39-C8-SH00	3330 06 06	PA10312-0033
20072209	F39-C8-SH00	3330 08 00	PA10312-0033
20072228	F39-C8-SL00	3330 08 03	PA10312-0033
20072265	F39-C8-SL00	3330 08 04	PA10312-0033
20072380	F3BMB10-1/4	333-00003-8	PA10312-0033-00
20072398	F3BMB10-3/8	333-00017-8	PA10312-0033-00
20072406	F3BMB12-1/2	333-00020-8	PA10312-0133
20072408	F3BMB12-1/4	333-00042-8	PA10312-0133
20072409	F3BMB12-3/8	333-09000-0	PA10312-0211
20072637	F3BMB14-1/2	3330A04 01	PA10312-0211
20072638	F3BMB14-3/8	3330A04 02	PA10312-0233
20072718	F3BMB16-1/2	3330A04 03	PA10312-0233
20072752	F3BMB16-3/8	3330A06 00	PA10312-0233
20072756	F3BMB18-1/2	3330A06 01	PA10312-0233
20072757	F3BMB20-3/4	333-13001-8	PA10312-0233-00
20072767	F3BMB22-3/4	3332FIL	PA10312-0233-00
20072770	F3BMB4-1/8	3332FIL	PA10312-0233-90
20072776	F3BMB6-1/4	3333 28 90	PA10312-0233-90
20072780	F3BMB6-1/8	3334 41 06 62	PA10312-0233-91
20072781	F3BMB8-1/4	3340BR	PA10312-0233-91
20072791	F3BMB8-1/8	3340BR	PA10312-0233-92
20072792	F3BPL10/12-3/8	3340BVR	PA10312-0233-92
20072794	F3BPL11/14-3/8	3340BVR	PA10312-1333
20072799	F3BPL2.7/4-1/8	3340CR	PA10312-1333
20072802	F3BPL4/6-1/4	3340CR	PA10312-4533ATEX
20072803	F3BPL4/6-1/8	3340CVR	PA10312-4533ATEX
20072808	F3BPL6/8-1/4	3340CVR	PA10312-4633ATEX
20072809	F3BPL6/8-1/8	3341AA	PA10312-4633ATEX
20072810	F3BPL6/8-3/8	3341AA	PA10312-4733ATEX
20072813	F3BPL7.5/10-1/4	3343FIL	PA10312-4733ATEX

20072814	F3BPL7.5/10-3/8	3343FIL	PA10312-4833ATEX
20072827	F3BPL8/10-1/4	3344FIL	PA10312-4833ATEX
20072832	F3BPL8/10-3/8	3344FIL	PA10312-5133
20072833	F3BPL8/12-3/8	3345FIL	PA10312-5133
20072834	F3BRAB10-1/4	3345FIL	PA10312-5133-00
20072835	F3BRAB12-3/4	3346FIL	PA10312-5133-00
20072837	F3BRAB12-3/8	3346FIL	PA10312-5333
20072841	F3BRAB20-3/4	3347FIL	PA10312-5333
20072842	F3BRAB22-3/4	3347FIL	PA10312-5533
20072843	F3BRAB6-1/4	33482-10-10B	PA10312-5533
20072844	F3BRAB8-1/4	33482-12-12B	PA10312-5733
20072849	F3BRAB8-1/8	33482-4-4B	PA10312-5733
20072850	F3HBL10-1/2BL	33482-4-4C	PA10312-6133
20072851	F3HBL10-1/4BL	33482-6-6B	PA10312-6133
20072863	F3HBL10-1/8BL	33482-8-8B	PA10312-6133
20072864	F3HBL10-3/8BL	3348FIL	PA10312-6133
20072870	F3HBL12-1/2BL	3348FIL	PA10312-6133-00
20072875	F3HBL12-1/4BL	3349FIL	PA10312-6133-00
20072876	F3HBL12-3/8BL	3349FIL	PA10312-6133-89
20072880	F3HBL14-1/2BL	3366FIL	PA10312-6133-89
20072882	F3HBL14-3/8BL	3366FIL	PA10312-6933
20072942	F3HBL16-1/2BL	3367FIL	PA10312-6933
20072943	F3HBL16-3/4BL	3367FIL	PA10313-0033
20072946	F3HBL16-3/8BL	3368FIL	PA10313-0033
20072947	F3HBL17-1/2BL	3368FIL	PA10313-0033
20072955	F3HBL17-3/8BL	3374 04 20 10	PA10313-0033
20073030	F3HBL18-1/2BL	3375 00 07	PA10313-0033-00
20073081	F3HBL18-3/4BL	3375 00 10	PA10313-0033-00
20073083	F3HBL18-3/8BL	3375 06 03 01	PA10313-0133
20073084	F3HBL20-1/2BL	3375 06 12	PA10313-0133
20073085	F3HBL20-3/8BL	3375 06 12 01	PA10313-0211
20073174	F3HBL6-1/4BL	3375 06 12 10	PA10313-0211
20073190	F3HBL6-1/8BL	3375 08 08 01	PA10313-0233
20073217	F3HBL7-1/4BL	3375 08 08 10	PA10313-0233
20073252	F3HBL7-1/8BL	3376FIL	PA10313-0233
20073255	F3HBL8-1/4BL	3376FIL	PA10313-0233
20073414	F3HBL8-1/8BL	33782-6-6-SM	PA10313-0233-92
20073437	F3HBL9-1/2BL	3379 04 00	PA10313-0233-92
20073443	F3HBL9-1/4BL	3379 06 00	PA10313-1333
20073447	F3HBL9-1/8BL	3379 08 00	PA10313-1333
20073488	F3HBL9-3/8BL	337A	PA10313-1333-00
20073489	F3PB10-1/2	337A	PA10313-1333-00
20073507	F3PB10-1/4	337B	PA10313-4533ATEX
20073578	F3PB10-3/8	337B	PA10313-4533ATEX
20073608	F3PB12-1/2	3381 04 00	PA10313-4733ATEX
20073642	F3PB12-1/4	3381 06 00	PA10313-4733ATEX
20073643	F3PB12-3/8	3381 08 00	PA10313-4833ATEX
20073644	F3PB14-1/2	338A	PA10313-4833ATEX
20073649	F3PB14-3/8	338A	PA10313-5133
20073650	F3PB4-1/4	338B	PA10313-5133
20073652	F3PB4-1/8	338B	PA10313-5333
20073653	F3PB6-1/4	3391 04 10	PA10313-5333
20073657	F3PB6-1/8	3391 06 10	PA10313-5733

20073658	F3PB8-1/4	3391 08 10	PA10313-5733
20073659	F3PB8-1/8	3391 08 13	PA10313-6133
20073680	F3PB8-3/8	3391 10 17	PA10313-6133
20073727	F3PMB4-1/8	33982-10-10	PA10313-6133
20073730	F3PMB6-1/4	33982-6-6C-SM	PA10313-6133
20073731	F3PMB6-1/8	33982-6-6-SM	PA10313-6133-00
20073742	F400B	33KAAK13SPN	PA10313-6133-00
20073743	F400BV	33KAAK17SPN	PA10313-9733ATEX
20073744	F400S	33KAAK21SPN	PA10313-9733ATEX
20073748	F400S4	33KAAW13SPN	PA10314-0033-00
20073753	F400SFV	33KAAW17SPN	PA10314-0033-00
20073755	F41HBL12-1/2BL	33KAAW21SPN	PA10314-0233
20073759	F41HBL12-1/4BL	33KAIW13SPN	PA10314-0233
20073826	F41HBL12-3/8BL	33KAIW13SVN	PA10314-0233
20073901	F41HBL17-1/2BL	33KAIW17SPN	PA10314-0233
20073902	F41HBL17-3/8BL	33KAIW21SPN	PA10314-0233-00
20073907	F41HBL4.5-M5BL	33KATF06SPN	PA10314-0233-00
20073958	F41HBL7-1/4BL	33KATF08SPN	PA10314-4533ATEX
20073961	F41HBL7-1/8BL	33KATF10SPN	PA10314-4533ATEX
20073967	F41HBL8-1/8BL	33KATF13SPN	PA10314-6133
20073984	F41HBL9-1/4BL	33SFAK10SXN	PA10314-6133
20073985	F41HBL9-1/8BL	33SFAK13SXN	PA10315-0033
20074010	F41HBL9-3/8BL	33SFAK17SXN	PA10315-0033
20074036	F42-0B-000	33SFAK21SXN	PA10315-0133
20074041	F42-0B-000	33SFAW13SXN	PA10315-0133
20074053	F42-0C-FM0	33SFAW17SXN	PA10315-0233
20074077	F42-0C-FM0	33SFIW10SXN	PA10315-0233
20074095	F42-12	33SFIW13SXN	PA10315-6133
20074117	F42-16	33SFIW17SXN	PA10315-6133
20074150	F42-20	33SFIW21SXN	PA10320
20074151	F42-8	33SFTF06SXN	PA10320
20074152	F42-CC-000	33SFTF08SXN	PA10320
20074157	F42-CC-000	33SFTF10SXN	PA10320
20074161	F42-CC-F00	33SFTF13SXN	PA10321
20074162	F42-CC-F00	33W82-4-4C-SM	PA10321
20074170	F43-0E-000	33W82-4-4-SM	PA10322
20074172	F43-0E-000	33W82-8-8C-SM	PA10322
20074175	F43-CE-000	33W82-8-8-SM	PA10323
20074177	F43-CE-000	3-4 FBZ-SS	PA10323
20074179	F4BMB10-1/4	3-4 FH4BZ-B	PA10324
20074180	F4BMB6-1/8	3-4 FH4BZ-SS	PA10324
20074183	F4BMB8-1/4	340-01013-8	PA10324
20074196	F4BPL12/16-1/2	340-01022-8	PA10324
20074216	F4BPL4/6-1/4	340-01027-8	PA10325
20074224	F4BPL4/6-1/8	340-01039-8	PA10325
20074241	F4BPL6/8-1/4	340-01046-8	PA10326
20074250	F4BPL6/8-1/8	340029P0001	PA10326
20074258	F4BPL8/10-1/8	340505R0001	PA10327
20074276	F4BPL8/12-1/4	340505R0002	PA10327
20074281	F4BPL8/12-3/8	340505R0004	PA10328
20074301	F4BRAB6-1/8	340505R0007	PA10328
20074302	F4MC4	340536P0004	PA10329
20074303	F4PB10-1/2	340558P0011	PA10329

20074314	F4PB10-1/4	340640P0001	PA10330
20074341	F4PB10-3/8	341166R0002	PA10330
20074342	F4PB12-1/2	341220P0002	PA10331
20074350	F4PB12-1/4	3419FIL	PA10331
20074377	F4PB12-3/8	3419FIL	PA10332
20074382	F4PB14-1/2	341B02	PA10332
20074395	F4PB14-3/8	341B02	PA10332
20074413	F4PB4-1/4	341B02-2995-4818653D	PA10332
20074459	F4PB4-1/8	341B02-2995-4818653D	PA10333-0033
20074475	F4PB6-1/4	341B02-2995-481865C2	PA10333-0033
20074485	F4PB6-1/8	341B02-2995-481865C2	PA10333-0033-00
20074498	F4PB8-1/4	341B02-2995-481865J3	PA10333-0033-00
20074502	F4PB8-1/8	341B02-2995-481865J3	PA10333-0233
20074503	F4PB8-3/8	341B02-2995-483510S6	PA10333-0233
20074505	F4PMB4-1/4	341B02-2995-483510S6	PA10333-0233-90
20074515	F4PMB4-1/8	341B02-4270-483520S6	PA10333-0233-90
20074518	F4PMB6-1/4	341B02-4270-483520S6	PA10333-4833ATEX
20074524	F4PMB6-1/8	341B34	PA10333-4833ATEX
20074531	F4UCOB10-1/4	341B34	PA10333-5133
20074548	F4UCOB16-1/2	341B3403	PA10333-5133
20074549	F4UCOB8-1/4	341B3403	PA10333-5733
20074550	F504G02DH	341B3403-2995-4818653D	PA10333-5733
20074568	F504G02DH	341B3403-2995-4818653D	PA10333-6133
20074644	F5C06A431X20C1	341B3403-2995-481865A2	PA10333-6133
20074688	F5C06A4N1X20C1	341B3403-2995-481865A2	PA10334-0033
20074689	F5C08A432X20C1002	341B3403-2995-481865A5	PA10334-0033
20074721	F5C08A4N2X20C1	341B3403-2995-481865A5	PA10334-0233
20074740	F5C10A433X20C1	341B3403-2995-481865C2	PA10334-0233
20074754	F600B	341B3403-2995-481865C2	PA10334-0233
20074757	F600BV	341B3403-2995-481865C5	PA10334-0233
20074782	F600S	341B3403-2995-481865C5	PA10334-0233-91
20074783	F600SF	341B3403-2995-482725C2	PA10334-0233-91
20074795	F600SV	341B3403-2995-482725C2	PA10334-1333
20074817	F602-12WJZ24/N	341B3403-2995-483510S6	PA10334-1333
20074818	F602-12WJZ24/N	341B3403-2995-483510S6	PA10334-6133
20074819	F602G06WJ	341B3403-4270-481000C2	PA10334-6133
20074821	F602G06WJ	341B3403-4270-481000C2	PA10334-6133
20074826	F602G08WJ	341B3403-492190R5	PA10334-6133
20074827	F602G08WJ	341B3403-492190R5	PA10335-0033-00
20074828	F602G12WJ	341B3403-8520-486265C2	PA10335-0033-00
20074829	F602G12WJ	341B3403-8520-486265C2	PA10335-0233
20074830	F602G16WJ	341B34-2995-4818653D	PA10335-0233
20074832	F602G16WJ	341B34-2995-4818653D	PA10335-0233-00
20074841	F602G16WJR	341B34-2995-481865A2	PA10335-0233-00
20074901	F602G16WJR	341B34-2995-481865A2	PA10335-4733ATEX
20074955	F602G20WJ	341B34-2995-481865A5	PA10335-4733ATEX
20074956	F602G20WJ	341B34-2995-481865A5	PA10335-6133
20074962	F620S	341B34-2995-481865C2	PA10335-6133
20074974	F75G03DJ	341B34-2995-481865C2	PA10335-6133-00
20074978	F75G03DJ	341B34-2995-483510S6	PA10335-6133-00
20075006	F75G03WJ	341B34-2995-483510S6	PA10345-0233
20075018	F75G03WJ	341B3440	PA10345-0233
20075020	F75G04WJ	341B3440	PA10348

20075021	F75G04WJ	341B34-4270-4810000A	PA10348
20075043	F75G04WJR	341B34-4270-4810000A	PA10349
20075044	F75G04WJR	341B34-4270-4810003D	PA10349
20075045	F800B	341B34-4270-4810003D	PA10361
20075046	F800S	341B34-4270-4810006J	PA10361
20075047	F800SS	341B34-4270-4810006J	PA10362-0033-00
20075070	F800SV	341B34-4270-481000C2	PA10362-0033-00
20075108	F820S	341B34-4270-481000C2	PA10362-0233
20075208	F8BMB12M16	341B34-4538-4810003D	PA10362-0233
20075310	F8BMB12M22	341B34-4538-4810003D	PA10362-0233-00
20075312	F8BMB4M5	341B34-492190C2	PA10362-0233-00
20075313	F8BPL6/8M10	341B34-492190C2	PA10362-1333
20075343	F8BPL6/8M12	341B3490	PA10362-1333
20075346	F8PB4M10	341B3490	PA10362-5133
20075394	F8PB4M5	341B3490-2995-48358001N7	PA10362-5133
20075414	F8PB6M10	341B3490-2995-48358001N7	PA10362-5733
20075496	F8PB6M12	341F34	PA10362-5733
20075500	F8PB6M5	341F34	PA10362-6133
20075595	F8PB8M12	341F3403	PA10362-6133
20075609	F8PB8M16	341F3403	PA10363-0033-00
20075610	F8PMB4M5	341F3403-2995-481865C2	PA10363-0033-00
20075611	F8PMB6M5	341F3403-2995-481865C2	PA10363-0233
20075616	F8UNPMB10M12	341F3403-4270-4810000A	PA10363-0233
20075624	F8UNPMB10M16	341F3403-4270-4810000A	PA10363-0233
20075647	F8UNPMB10M22	341F3403-4538-481000C2	PA10363-0233
20075649	F8UNPMB12M12	341F3403-4538-481000C2	PA10363-0233-92
20075650	F8UNPMB12M16	341F34-2995-4818653D	PA10363-0233-92
20075695	F8UNPMB12M22	341F34-2995-4818653D	PA10363-1333
20075717	F8UNPMB16M16	341F34-2995-481865A5	PA10363-1333
20075718	F8UNPMB16M22	341F34-2995-481865A5	PA10363-6133
20075720	F8UNPMB6M12	341F34-2995-481865C2	PA10363-6133
20075735	F8UNPMB6M16	341F34-2995-481865C2	PA10363-6133
20075736	F8UNPMB6M22	341F34-4270-4810000A	PA10363-6133
20075755	F8UNPMB8M12	341F34-4270-4810000A	PA10363-6133-89
20075756	F8UNPMB8M14	341F34-4270-4810003D	PA10363-6133-89
20075768	F8UNPMB8M16	341F34-4270-4810003D	PA10364-0233
20075793	F8UNPMB8M22	341F34-4270-481000C2	PA10364-0233
20075795	F9M4A6565	341F34-4270-481000C2	PA10364-6133
20075803	F9M4R1100	341F34-4270-481000C4	PA10364-6133
20075818	F9M4RR1004	341F34-4270-481000C4	PA10365-0000
20075822	F9M4RR1007	341L0197	PA10365-0000
20075829	FA00-1017	341L0197	PA10365-0200
20075847	FA00-1544	341L04	PA10365-0200
20075848	FA00-1558	341L04	PA10367-0233
20075958	FA00-1616	341L04-8993-4810450A	PA10367-0233
20075959	FA00-1617	341L04-8993-4810450A	PA10367-6133
20075962	FA00-1618	341L04-8993-4889800A	PA10367-6133
20075969	FA00-1650	341L04-8993-4889800A	PA10367-6133
20075970	FA06-1259	341L04-8993-488980C2	PA10367-6133
20075972	FA06-1263	341L04-8993-488980C2	PA10368
20075984	FA06-1299	341L05	PA10368
20075985	FA06-1388	341L05	PA10369-0033-00
20075986	FA06-1623	341L05-8993-488980C2	PA10369-0033-00

20075988	FA10-1217	341L05-8993-488980C2	PA10369-0233
20075989	FA10-1441	341L11	PA10369-0233
20076013	FA10-1612	341L11	PA10369-0233
20076015	FA101S	341L11-482605C2	PA10369-0233
20076017	FA12406S	341L11-482605C2	PA10369-5733
20076018	FA13A13ISPN	341L11-8993-4889800A	PA10369-5733
20076020	FA17A17ISPN	341L11-8993-4889800A	PA10369-6133
20076058	FAN-NMD	341L11-8993-488980C2	PA10369-6133
20076059	FB001J08	341L11-8993-488980C2	PA10370-0033-00
20076096	FB376U30	341L9101	PA10370-0033-00
20076097	FBMB10-1/2	341L9101	PA10370-0233
20076136	FBMB10-1/4	341L9101-8993-4889803D	PA10370-0233
20076152	FBMB10-3/8	341L9101-8993-4889803D	PA10370-0233
20076165	FBMB12-1/2	341L9101-8993-488980A2	PA10370-0233
20076166	FBMB12-3/8	341L9101-8993-488980A2	PA10370-6133
20076167	FBMB14-1/2	341L9101-8993-488980C2	PA10370-6133
20076195	FBMB16-1/2	341L9101-8993-488980C2	PA10377-0233
20076208	FBMB22-3/4	341L9201	PA10377-0233
20076322	FBMB4-1/16	341L9201	PA10379-0233
20076326	FBMB4-1/8	341L9201-8993-488980C2	PA10379-0233
20076333	FBMB6-1/4	341L9201-8993-488980C2	PA10385-06-0233-92(1)
20076348	FBMB6-1/8	341L9504	PA10385-06-0233-92(1)
20076370	FBMB8-1/4	341L9504	PA10385-12-0233-92(1)
20076382	FBMB8-1/8	341L9504-8993-4889803D	PA10385-12-0233-92(1)
20076412	FBO 60327	341L9504-8993-4889803D	PA10386-08-0233-88(1)
20076413	FBO 60328	341L9504-8993-4889807J	PA10386-08-0233-88(1)
20076449	FBO 60329	341L9504-8993-4889807J	PA10390-0033-00
20076450	FBO 60331	341L9504-8993-488980C2	PA10390-0033-00
20076472	FBO 60333	341L9504-8993-488980C2	PA10390-0133-88
20076496	FBO 60335	341L9534	PA10390-0133-88
20076528	FBO 60336	341L9534	PA10390-0233-00
20076574	FBO 60337	341L9534-2995	PA10390-0233-00
20076576	FBO 60338	341L9534-2995	PA10390-0233-00
20076614	FBO 60341	341L9534-2995-4818653D	PA10390-0233-00
20076615	FBO 60342	341L9534-2995-4818653D	PA10390-0233-88
20076618	FBO 60343	341L9534-2995-481865C2	PA10390-0233-88
20076619	FBO 60344	341L9534-2995-481865C2	PA10390-0233-92
20076644	FBO 60353	341L9534-2995-481865J3	PA10390-0233-92
20076699	FBO 60354	341L9534-2995-481865J3	PA10390-5133-88
20076716	FBO 60355	341L9534-2995-482635S6	PA10390-5133-88
20076783	FBO 60356	341L9534-2995-482635S6	PA10390-6133-88
20076795	FBO 60356-MTU	341L9534-2995-482725C2	PA10390-6133-88
20076810	FBO 60357	341L9534-2995-482725C2	PA10391-0233-00
20076834	FBO 60358	341L9534-2995-483510S6	PA10391-0233-00
20076835	FBO-10	341L9534-2995-483510S6	PA10391-0233-88
20076838	FBO-10-DPL	341L9534-483371C2	PA10391-0233-88
20076862	FBO-14	341L9534-483371C2	PA10392-0233-00
20076922	FBO-14-DPL	341L9534-492070C2	PA10392-0233-00
20076945	FBPL10/12-3/8	341L9534-492070C2	PA10394-0033-00
20076954	FBPL2.7/4-1/8	341L9534-492070R5	PA10394-0033-00
20076965	FBPL4/6-1/4	341L9534-492070R5	PA10394-0233-00
20076974	FBPL4/6-1/8	341L9534-492190C2	PA10394-0233-00
20076982	FBPL6/8-1/4	341L9534-492190C2	PA10394-0233-88

20076988	FBPL6/8-1/8	341L9534-495905C2	PA10394-0233-88
20076994	FBPL8/10-1/4	341L9534-495905C2	PA10394-6133-88
20077002	FBPL8/10-3/8	341L9534-495905E5	PA10394-6133-88
20077003	FBRAB10-1/2	341L9534-495905E5	PA10398-0233-00
20077090	FBRAB12-1/2	341L9534-495905F4	PA10398-0233-00
20077091	FBRAB12-1/4	341L9534-495905F4	PA10398-0233-88
20077097	FBRAB6-1/4	341L9594	PA10398-0233-88
20077116	FBRAB8-1/2	341L9594	PA10398-0233-92
20077258	FBRAB8-1/4	341L9594-2995-48358001N7	PA10398-0233-92
20077275	FBRAB8-3/8	341L9594-2995-48358001N7	PA10400-0033-00
20077292	FBZ 10-1/2K-SS	341L9594-495910N7	PA10400-0033-00
20077328	FBZ 10-1/2R-SS	341L9594-495910N7	PA10400-0133-88
20077332	FBZ 10-1/2-SS	341L9597	PA10400-0133-88
20077365	FBZ 10-1/4K-SS	341L9597	PA10400-0233-00
20077410	FBZ 10-1/4R-SS	341L9597-495900C2	PA10400-0233-00
20077411	FBZ 10-1/4-SS	341L9597-495900C2	PA10400-0233-88
20077431	FBZ 10-1/8K-SS	341L9597-495910N7	PA10400-0233-88
20077434	FBZ 10-1/8-SS	341L9597-495910N7	PA10402-0233-00
20077450	FBZ 10-3/8K-SS	341L9598	PA10402-0233-00
20077464	FBZ 10-3/8R-SS	341L9598	PA10402-0233-88
20077483	FBZ 10-3/8-SS	341N01	PA10402-0233-88
20077525	FBZ 12-1/2K-SS	341N01	PA10404-0033-00
20077528	FBZ 12-1/2R-SS	341N01-482605C2	PA10404-0033-00
20077553	FBZ 12-1/2-SS	341N01-482605C2	PA10404-0233-00
20077640	FBZ 12-1/4K-SS	341N01-4826063D	PA10404-0233-00
20077660	FBZ 12-1/4R-SS	341N01-4826063D	PA10404-0233-88
20077668	FBZ 12-1/4-SS	341N01-482606C2	PA10404-0233-88
20077717	FBZ 12-3/4K-SS	341N01-482606C2	PA10404-0233-92
20077718	FBZ 12-3/4R-SS	341N01-8993-4810453D	PA10404-0233-92
20077724	FBZ 12-3/4-SS	341N01-8993-4810453D	PA10405-0233-00
20077743	FBZ 12-3/8K-SS	341N01-8993-4810457J	PA10405-0233-00
20077751	FBZ 12-3/8R-SS	341N01-8993-4810457J	PA10406-0233-88
20077821	FBZ 12-3/8-SS	341N01-8993-481045C2	PA10406-0233-88
20077884	FBZ 14-1/4-SS	341N01-8993-481045C2	PA10407-0233-00
20077885	FBZ 16-1/2K-SS	341N01-8993-4889800A	PA10407-0233-00
20078059	FBZ 16-1/2R-SS	341N01-8993-4889800A	PA10408-0233-00
20078179	FBZ 16-1/2-SS	341N01-8993-4889803D	PA10408-0233-00
20078200	FBZ 16-3/4K-SS	341N01-8993-4889803D	PA10408-0233-88
20078233	FBZ 16-3/4-SS	341N01-8993-4889806J	PA10408-0233-88
20078271	FBZ 16-3/8K-SS	341N01-8993-4889806J	PA10408-0233-92
20078286	FBZ 16-3/8R-SS	341N01-8993-4889807J	PA10408-0233-92
20078287	FBZ 16-3/8-SS	341N01-8993-4889807J	PA10410
20078318	FBZ 20-1/2-SS	341N01-8993-488980A2	PA10410
20078363	FBZ 20-3/4R-SS	341N01-8993-488980A2	PA10411
20078391	FBZ 20-3/4-SS	341N01-8993-488980C2	PA10411
20078403	FBZ 25-1-SS	341N01-8993-488980C2	PA10412
20078407	FBZ 25-3/4-SS	341N01-8993-492912P8	PA10412
20078408	FBZ 3-1/4K-SS	341N01-8993-492912P8	PA10413
20078422	FBZ 3-1/4-SS	341N01-8993-495865A2	PA10413
20078496	FBZ 3-1/8-SS	341N01-8993-495865A2	PA10414
20078548	FBZ 4-1/8K-SS	341N01-8993-495865C2	PA10414
20078630	FBZ 6-1/2K-SS	341N01-8993-495865C2	PA10419
20078687	FBZ 6-1/2R-SS	341N02	PA10419

20078745	FBZ 6-1/2-SS	341N02	PA10420-0233-00
20078771	FBZ 6-1/4-B	341N02-8993-481045C2	PA10420-0233-00
20078802	FBZ 6-1/4K-SS	341N02-8993-481045C2	PA10420-0233-88
20078824	FBZ 6-1/4R-B	341N02-8993-488980C2	PA10420-0233-88
20078825	FBZ 6-1/4R-SS	341N02-8993-488980C2	PA10424-0233-00
20078837	FBZ 6-1/4-SS	341N03	PA10424-0233-00
20078858	FBZ 6-1/8K-SS	341N03	PA10424-0233-88
20078867	FBZ 6-1/8R-SS	341N03-496131C2	PA10424-0233-88
20078887	FBZ 6-1/8-SS	341N03-496131C2	PA10428-0033-00
20078895	FBZ 6-3/8K-SS	341N03-496131P9	PA10428-0033-00
20078896	FBZ 6-3/8R-SS	341N03-496131P9	PA10428-0233-88
20078958	FBZ 6-3/8-SS	341N03-496482C2	PA10428-0233-88
20079007	FBZ 8-1/2K-SS	341N03-496482C2	PA10428-0233-92
20079029	FBZ 8-1/2R-SS	341N03-496482P9	PA10428-0233-92
20079043	FBZ 8-1/2-SS	341N03-496482P9	PA10434-0033-00
20079132	FBZ 8-1/4K-SS	341N04	PA10434-0033-00
20079268	FBZ 8-1/4R-SS	341N04	PA10434-0233-88
20079298	FBZ 8-1/4-SS	341N04-496131C2	PA10434-0233-88
20079299	FBZ 8-1/8K-SS	341N04-496131C2	PA10440
20079300	FBZ 8-1/8R-SS	341N04-496482C2	PA10440
20079301	FBZ 8-1/8-SS	341N04-496482C2	PA10443
20079402	FBZ 8-3/8K-SS	341N05-496131C2	PA10443
20079418	FBZ 8-3/8R-SS	341N05-496131C2	PA10490-02-22(3)
20079437	FBZ 8-3/8-SS	341N05-496131P9	PA10490-02-22(3)
20079438	FC101K300	341N05-496131P9	PA10490-02-22(4)
20079441	FC101S300	341N11	PA10490-02-22(4)
20079443	FC101S600	341N11	PA10490-05-22(1)
20079459	FCB4A8F150	341N11-8993-4810450A	PA10490-05-22(1)
20079475	FCB4A8F1500	341N11-8993-4810450A	PA10490-05-22(2)
20079521	FCB4A8F300	341N11-8993-4889803D	PA10490-05-22(2)
20079637	FCB4A8F600	341N11-8993-4889803D	PA10490-06-22(1)
20079657	FCB6A8F150	341N11-8993-4889807J	PA10490-06-22(1)
20079738	FCB6A8F1500	341N11-8993-4889807J	PA10490-06-22(2)
20079774	FCB6A8F300	341N12-8993-4889803D	PA10490-06-22(2)
20079786	FCB6A8F600	341N12-8993-4889803D	PA10490-06-22(4)
20079790	FCB8A8F150	341N21	PA10490-06-22(4)
20079800	FCB8A8F1500	341N21	PA10490-06-22(5)
20079819	FCB8A8F300	341N21-2995-482725C2	PA10490-06-22(5)
20079831	FCB8A8F600	341N21-2995-482725C2	PA10490-06-22(8)
20079832	FCB8A8F900	341N21-2995-495870C2	PA10490-06-22(8)
20079877	FCBM10A8F150	341N21-2995-495870C2	PA10490-06-22(9)
20079878	FCBM10A8F300	341N21-492070C2	PA10490-06-22(9)
20079887	FCBM10A8F600	341N21-492070C2	PA10490-07-22(1)
20079918	FCBM10A8F900	341N21-492070P9	PA10490-07-22(1)
20079940	FCBM12A8F150	341N21-492070P9	PA10490-08-22(2)
20079941	FCBM12A8F1500	341N21-492190C2	PA10490-08-22(2)
20079966	FCBM12A8F300	341N21-492190C2	PA10490-08-22(5)
20079967	FCBM12A8F600	341N2190-2995-48396001N7	PA10490-08-22(5)
20079968	FCBM12A8F900	341N2190-2995-48396001N7	PA10490-10-22(10)
20080003	FCBM6A8F150	341N22	PA10490-10-22(10)
20080004	FCBM6A8F300	341N22	PA10490-10-22(2)
20080005	FCG310AH10	341N22-2995-481865K8	PA10490-10-22(2)
20080006	FCP101F	341N22-2995-481865K8	PA10490-10-22(22)

20080022	FCP101F08	341N22-2995-492453C2	PA10490-10-22(22)
20080032	FCR121F	341N22-2995-492453C2	PA10490-10-22(3)
20080076	FD05	341N31	PA10490-10-22(3)
20080092	FD10	341N31	PA10490-10-22(4)
20080093	FD10	341N3102-495905C2	PA10490-10-22(4)
20080214	FD13	341N3102-495905C2	PA10490-12-22(3)
20080225	FD17	341N3108	PA10490-12-22(3)
20080301	FD21	341N3108	PA10490-14-22(1)
20080314	FD26	341N3108-2995-4818653D	PA10490-14-22(1)
20080355	FD33	341N3108-2995-4818653D	PA10490-14-22(2)
20080378	FD38-400X	341N3108-2995-481865C2	PA10490-14-22(2)
20080410	FDA1A05HSXG8N	341N3108-2995-481865C2	PA10490-14-22(3)
20080447	FDA1A05P98G8Y	341N3108-2995-492453C2	PA10490-14-22(3)
20080503	FDA1A05V98G8Y	341N3108-2995-492453C2	PA10490-14-22(5)
20080547	FDA1A10B98G8Y	341N3108-492190C2	PA10490-14-22(5)
20080569	FDA1A10HPXG8N	341N3108-492190C2	PA10490-16-22(2)
20080599	FDA1A10HSXG8N	341N3108-49364060C2	PA10490-16-22(2)
20080604	FDA1A10P98G8Y	341N3108-49364060C2	PA10490-16-22(3)
20080623	FDA1A10P98YB6MY	341N3108-495905C2	PA10490-16-22(3)
20080624	FDA1A10S98G8Y	341N3108-495905C2	PA10491-06-22(1)
20080690	FDA1A10V98G8Y	341N3108-495905E5	PA10491-06-22(1)
20080750	FDA1A20HL98G8N	341N3108-495905E5	PA10491-09-22(1)
20080767	FDA1A20N98G8Y	341N3108-495905F4	PA10491-09-22(1)
20080768	FDA1B05HSXG8N	341N3108-495905F4	PA10491-10-22(1)
20080836	FDA2A05HSXG12N	341N31-2995-4818653D	PA10491-10-22(1)
20080844	FDA2A05S98G12Y	341N31-2995-4818653D	PA10491-10-22(2)
20080862	FDA2A10B98G12Y	341N31-2995-481865C2	PA10491-10-22(2)
20080908	FDA2A10HPXG12N	341N31-2995-481865C2	PA10491-10-22(3)
20080917	FDA2A10HSXG12N	341N31-2995-481865K8	PA10491-10-22(3)
20080929	FDA2A10L98G12Y	341N31-2995-481865K8	PA10491-10-22(5)
20080939	FDA2A10P98G12Y	341N31-2995-482725C2	PA10491-10-22(5)
20080948	FDA2A10P98YB6MY	341N31-2995-482725C2	PA10491-11-22(1)
20081013	FDA2A10S98G12Y	341N31-2995-492453C2	PA10491-11-22(1)
20081016	FDA2A20S98G12Y	341N31-2995-492453C2	PA10491-11-22(2)
20081017	FDA3A05HSXG16N	341N3130	PA10491-11-22(2)
20081054	FDA3A05P98G16Y	341N3130	PA10491-12-22(1)
20081124	FDA3A05S98G16Y	341N31-4270-4851003D	PA10491-12-22(1)
20081137	FDA3A10B98G16Y	341N31-4270-4851003D	PA10491-12-22(2)
20081172	FDA3A10HBXG16N	341N31-4538-481000C2	PA10491-12-22(2)
20081296	FDA3A10HPXG16N	341N31-4538-481000C2	PA10510-0233-00
20081414	FDA3A10HSXG16N	341N31-4833713D	PA10510-0233-00
20081457	FDA3A10J98G16Y	341N31-4833713D	PA10510-0233-88
20081465	FDA3A10L98G16Y	341N31-483371C2	PA10510-0233-88
20081499	FDA3A10P50G16Y	341N31-483371C2	PA10510-0233-92
20081528	FDA3A10P98G16Y	341N31-492190C7	PA10510-0233-92
20081716	FDA3A10P98YB6MY	341N31-492190C7	PA10510-6133-88
20081766	FDA3A10S98G16Y	341N31-495905A2	PA10510-6133-88
20081807	FDAE1A02Q	341N31-495905A2	PA10511-0233-88
20081850	FDAE1A05Q	341N31-495905C2	PA10511-0233-88
20081946	FDAE1A05QH	341N31-495905C2	PA10514-0233-00
20081978	FDAE1A10Q	341N31-495905F4	PA10514-0233-00
20082614	FDAE1A10QH	341N31-495905F4	PA10515-0233-92
20082722	FDAE1A20Q	341N3190	PA10515-0233-92

20082723	FDAE1A20QH	341N3190	PA10518-0233-00
20082770	FDAE1B20QH	341N3190-2995-48358001N7	PA10518-0233-00
20082781	FDAE2A05Q	341N3190-2995-48358001N7	PA10518-0233-92
20082782	FDAE2A05QH	341N3190-2995-48396001N7	PA10518-0233-92
20082814	FDAE2A10Q	341N3190-2995-48396001N7	PA10521-6133-00
20082839	FDAE2A10QH	341N3190-48865001N7	PA10521-6133-00
20082862	FDAE2A20Q	341N3190-48865001N7	PA10528-0233-92
20082938	FDAE2A20QH	341N3190-48866001N7	PA10528-0233-92
20083117	FDAE2B10Q	341N3190-48866001N7	PA10530
20083132	FDAE2B20Q	341N3190-490890L8	PA10530
20083133	FDAE3A02Q	341N3190-490890L8	PA10532
20083258	FDAE3A02QH	341N3190-495900C2	PA10532
20083267	FDAE3A05Q	341N3190-495900C2	PA10533
20083279	FDAE3A05QH	341N3196	PA10533
20083298	FDAE3A10Q	341N3196	PA10535
20083330	FDAE3A10QH	341N3196-2995-482745C2	PA10535
20083331	FDAE3A20Q	341N3196-2995-482745C2	PA10536
20083338	FDB1A05HSXG20N	341N3196-495900C2	PA10536
20083375	FDB1A05P98G20Y	341N3196-495900C2	PA10537
20083390	FDB1A10HPXG20N	341N3196-495910N7	PA10537
20083394	FDB1A10HSXG20N	341N3196-495910N7	PA120/025/01
20562392	FDB1A10L98G20Y	341N3197	PA120/025/02
20582515	FDB1A10P98G20Y	341N3197	PA120/025/03
20612652	FDB1A10S98G20Y	341N3197-2995-482740C2	PA12001
20983513	FDB2A05HPXG24N	341N3197-2995-482740C2	PA12001
21011566	FDB2A10HBXG24N	341N3197-495900C2	PA12002
21011567	FDB2A10HPXG24N	341N3197-495900C2	PA12002
21011568	FDB2A10HSXG24N	341N3197-495900C4	PA12002
21011603	FDB2A10P98G24Y	341N3197-495900C4	PA12002
24166183	FDB2A10S98G24Y	341N3197-495900C5	PA12003
24166486	FDB2A20S98G24Y	341N3197-495900C5	PA12003
24166867	FDB2B10D98G24Y	341N3197-495900E5	PA12007
25033901	FDB3A05HSXYE3MN	341N3197-495900E5	PA12007
25035658	FDB3A10HPXYE3MN	341N3197-495900F4	PA12007
25036453	FDB3A10P98YE3MY	341N3197-495900F4	PA12007
25036470	FDB3A20L98YE3MY	341N3197-495900K8	PA12516
25036471	FDBE1A02Q	341N3197-495900K8	PA12516
25036491	FDBE1A05Q	341N3197-495910N7	PA12516
25036689	FDBE1A05QH	341N3197-495910N7	PA12516
25037914	FDBE1A10Q	341N31-N0-H111P3	PA12593
25037924	FDBE1A10QH	341N31-N0-H111P3	PA12593
25037939	FDBE1A20Q	341N32	PA12593
25037946	FDBE1A20QH	341N32	PA12593
25037976	FDBE1B10QH	341N32-2995-481865A2	PA12594
25038447	FDBE2A05Q	341N32-2995-481865A2	PA12594
25038460	FDBE2A05QH	341N32-2995-481865C2	PA12594
25038461	FDBE2A10Q	341N32-2995-481865C2	PA12594
25038642	FDBE2A10QH	341N32-2995-4827253D	PA12671
25038693	FDBE2A20Q	341N32-2995-4827253D	PA12671
25038703	FDBE3A05Q	341N32-4538-4810003D	PA12671
25038704	FDBE3A05QH	341N32-4538-4810003D	PA12671
25038753	FDBE3A10Q	341N32-4538-481000C2	PA12671ATEX
25038803	FDBE3A10QH	341N32-4538-481000C2	PA12671ATEX

25038804	FDBE3A20Q	341N32-492190C2	PA12672
25038864	FDBE3B20Q	341N32-492190C2	PA12672
25039224	FDS-001	341N3290	PA12672
25039355	FDS-002	341N3290	PA12672
25039534	FDS-003	341N3290-2995-48358001N7	PA12673
25039561	FDS-004	341N3290-2995-48358001N7	PA12673
25039605	FE16X150	341N3297	PA12673
30043972	FE16X150	341N3297	PA12673
31011386	FEC-371-8FB	341N3297-495900C2	PA12673ATEX
031500199	FEC-372-8FB	341N3297-495900C2	PA12673ATEX
031500199	FEC-502-12FB	341N3297-495900F4	PA12674
032140299	FEDE06L0.2B71X	341N3297-495900F4	PA12674
032140299	FEDE06L0.2BX	341N3297-495910N7	PA12674
032500100	FEDE06L0.5B71X	341N3297-495910N7	PA12674
032500100	FEDE06L0.5BX	341N34	PA12675
032500119	FEDE06L2B71X	341N34	PA12675
032500119	FEDE06L2BX	341N35	PA12676
032500319	FEDE06L3B71X	341N35	PA12676
032500319	FEDE06L3BX	341N35-495905C2	PA12676
032500419	FEDE06L5BX	341N35-495905C2	PA12676
032500419	FEDE06L6BX	341NS8711-2995-48358001N7	PA12676ATEX
032501500	FEDE06L71X	341NS8711-2995-48358001N7	PA12676ATEX
032501500	FEDE06LX	341P01	PA12677
032510375	FEDE08L0.2B71X	341P01	PA12677
032510375	FEDE08L0.2BX	341P01-8993-4889803D	PA12677
033520099	FEDE08L0.5B71X	341P01-8993-4889803D	PA12677
033520099	FEDE08L0.5BX	341P01-8993-488980C2	PA12678
034150099	FEDE08L2B71X	341P01-8993-488980C2	PA12678
034150099	FEDE08L2BX	341P02	PA12679-0033
35032455	FEDE08L3B71X	341P02	PA12679-0033
35032456	FEDE08L3BX	341P02-8993-4810453D	PA12679-0033
35032458	FEDE08L5BX	341P02-8993-4810453D	PA12679-0033
35032565	FEDE08L6BX	341P02-8993-481045C2	PA12679-0033-00
35033827	FEDE08L71X	341P02-8993-481045C2	PA12679-0033-00
35034393	FEDE08LX	341P02-8993-488980A2	PA12679-0133
35034395	FEDE10L0.2B71X	341P02-8993-488980A2	PA12679-0133
35034562	FEDE10L0.2BX	341P02-8993-488980C2	PA12679-0233
35034590	FEDE10L0.5B71X	341P02-8993-488980C2	PA12679-0233
35034629	FEDE10L0.5BX	341P21	PA12679-0233
35034848	FEDE10L2B71X	341P21	PA12679-0233
35035122	FEDE10L2BX	341P2108	PA12679-0233-00
35035644	FEDE10L3B71X	341P2108	PA12679-0233-00
35035947	FEDE10L3BX	341P21-2995-4818653D	PA12679-0233-91
35036207	FEDE10L4BX	341P21-2995-4818653D	PA12679-0233-91
35036248	FEDE10L5BX	341P21-2995-483510S6	PA12679-0233-92
35036374	FEDE10L6BX	341P21-2995-483510S6	PA12679-0233-92
35036416	FEDE10L71X	341P21-492190C2	PA12679-0433
35036449	FEDE10LX	341P21-492190C2	PA12679-0433
35036459	FEDE12L0.2B71X	341P21-495905B8	PA12679-1033
35036460	FEDE12L0.2BX	341P21-495905B8	PA12679-1033
35036464	FEDE12L0.5B71X	341P21-495905C2	PA12679-1333
35036532	FEDE12L0.5BX	341P21-495905C2	PA12679-1333
35036779	FEDE12L1.5BX	341P21-495905F4	PA12679-4533ATEX

35037050	FEDE12L2B71X	341P21-495905F4	PA12679-4533ATEX
35037068	FEDE12L2BX	341P2190	PA12679-4633ATEX
35037132	FEDE12L3B71X	341P2190	PA12679-4633ATEX
35037135	FEDE12L3BX	341P2197	PA12679-4733ATEX
35037142	FEDE12L5BX	341P2197	PA12679-4733ATEX
35037146	FEDE12L6BX	341P2197-495900C2	PA12679-4833ATEX
35037311	FEDE12L71X	341P2197-495900C2	PA12679-4833ATEX
35037312	FEDE12LX	341P2197-495910N7	PA12679-5133
35037402	FEDE15L0.2B71X	341P2197-495910N7	PA12679-5133
35037476	FEDE15L0.2BX	341P22	PA12679-5333
35037829	FEDE15L0.5B71X	341P22	PA12679-5333
35037833	FEDE15L0.5BX	341P22-2995-481865C2	PA12679-5733
35037940	FEDE15L2B71X	341P22-2995-481865C2	PA12679-5733
35037941	FEDE15L2BX	341P22-2995-483510P0	PA12679-6133
35037968	FEDE15L3B71X	341P22-2995-483510P0	PA12679-6133
35037970	FEDE15L3BX	341P22-2995-495870C2	PA12679-6133
35037992	FEDE15L4BX	341P22-2995-495870C2	PA12679-6133
35038003	FEDE15L5BX	341P22-4538-4810003D	PA12679-6133-00
35038171	FEDE15L6BX	341P22-4538-4810003D	PA12679-6133-00
35038188	FEDE15L71X	341P22-495905F4	PA12679-6933
35038315	FEDE15LX	341P22-495905F4	PA12679-6933
35038424	FEDE18L0.1BX	341P2290-2995-48358001N7	PA12679-9533ATEX
35038523	FEDE18L0.2B71X	341P2290-2995-48358001N7	PA12679-9533ATEX
35038677	FEDE18L0.2BX	341P2297	PA12680-0033
35038726	FEDE18L0.5B71X	341P2297	PA12680-0033
35038872	FEDE18L0.5BX	341P2297-2995-482740C2	PA12680-0033-00
35038873	FEDE18L1.5BX	341P2297-2995-482740C2	PA12680-0033-00
35039004	FEDE18L2B71X	341P2297-495900C2	PA12680-0233
35039243	FEDE18L2BX	341P2297-495900C2	PA12680-0233
35039246	FEDE18L3B71X	341P2297-495900F4	PA12680-0233
35039247	FEDE18L3BX	341P2297-495900F4	PA12680-0233
35039290	FEDE18L4BX	341P2297-495910N7	PA12680-0233-91
35039291	FEDE18L5BX	341P2297-495910N7	PA12680-0233-91
35039476	FEDE18L6BX	341P34-495905C2	PA12680-0233-92
35039571	FEDE18L71X	341P34-495905C2	PA12680-0233-92
35039975	FEDE18LX	341Y312UNML	PA12680-1333-00
035588000	FEDE22L0.2B71X	341Y312UNML	PA12680-1333-00
035589013	FEDE22L0.2BX	342N03	PA12680-4533ATEX
36030574	FEDE22L0.5B71X	342N03	PA12680-4533ATEX
039135001	FEDE22L0.5BX	342N03-496131C2	PA12680-4833ATEX
40002069	FEDE22L1.5BX	342N03-496131C2	PA12680-4833ATEX
40043803	FEDE22L2.5BX	342N11	PA12680-5133
40043821	FEDE22L2B71X	342N11	PA12680-5133
40043837	FEDE22L2BX	342N11-8993-488980C2	PA12680-5733
40043844	FEDE22L3BX	342N11-8993-488980C2	PA12680-5733
40043850	FEDE22L4BX	342N3197	PA12680-6133
40043869	FEDE22L5BX	342N3197	PA12680-6133
40043912	FEDE22L6BX	342N3197-495910N7	PA12680-6133
40043920	FEDE22L71X	342N3197-495910N7	PA12680-6133
40043942	FEDE22LX	343198P0001	PA12680-9533ATEX
40043943	FEDE28L0.2B71X	343203P0001	PA12680-9533ATEX
40043944	FEDE28L0.2BX	343209P0001	PA12680-9833ATEX
40043945	FEDE28L0.5B71X	343249P0001	PA12680-9833ATEX

40982923	FEDE28L0.5BX	343252P0006	PA12681-0033
042586000	FEDE28L1.5BX	343254P0008	PA12681-0033
45031003	FEDE28L2.5BX	343350P0001	PA12681-0033-00
45031031	FEDE28L2B71X	343351P0001	PA12681-0033-00
45031041	FEDE28L2BX	343358P0001	PA12681-0211
45031042	FEDE28L3BX	3434FIL	PA12681-0211
45031144	FEDE28L4BX	3434FIL	PA12681-0211-00
45031165	FEDE28L5BX	344485P0002	PA12681-0211-00
45031217	FEDE28L6BX	345B04	PA12681-0233
45031396	FEDE28L71X	345B04	PA12681-0233
45031423	FEDE28LX	345B04-4269-484990P0	PA12681-0233
45031425	FEDE35L0.2BX	345B04-4269-484990P0	PA12681-0233
45031435	FEDE35L0.5B71X	345B04-4269-485400C2	PA12681-4833ATEX
45031771	FEDE35L0.5BX	345B04-4269-485400C2	PA12681-4833ATEX
45031936	FEDE35L2.5BX	345B04-4269-485400C4	PA12681-5133
45031959	FEDE35L2B71X	345B04-4269-485400C4	PA12681-5133
45031961	FEDE35L2BX	345B24	PA12681-5733
45032002	FEDE35L3B71X	345B24	PA12681-5733
45032003	FEDE35L3BX	345B24-4269-485400C2	PA12681-6133
45032220	FEDE35L4BX	345B24-4269-485400C2	PA12681-6133
45032232	FEDE35L5BX	345B34	PA12682-0033-00
45032238	FEDE35L6BX	345B34	PA12682-0033-00
45032281	FEDE35L71X	345B34-4269-4849901P	PA12682-0233
45032311	FEDE35LX	345B34-4269-4849901P	PA12682-0233
45032416	FEM-1001-20FB	345B34-4269-4849903P	PA12682-0233
45032459	FEM-1002-20FB	345B34-4269-4849903P	PA12682-0233
45032467	FEM-121-2FB	345B34-4269-484990P0	PA12683-0033
45032507	FEM-122-2FB	345B34-4269-484990P0	PA12683-0033
45032585	FEM-251-4FB	345B34-4269-485400C2	PA12683-0033-00
45032668	FEM-252-4FB	345B34-4269-485400C2	PA12683-0033-00
45032671	FEM-371-6FB	345B34-4269-485400C5	PA12683-0233
45032725	FEM-371-8FB	345B34-4269-485400C5	PA12683-0233
45032783	FEM-372-6FB	345B34-4538-4849903P	PA12683-0233
45032934	FEM-372-8FB	345B34-4538-4849903P	PA12683-0233
45032961	FEM-501-12FB	345F34	PA12683-1333
45032999	FEM-501-8FB	345F34	PA12683-1333
45033104	FEM-501-8FB-E4	345F34-4269-4849903P	PA12683-5333
45033246	FEM-502-12FB	345F34-4269-4849903P	PA12683-5333
45033512	FEM-502-8FB	345F34-4269-485400C2	PA12683-5733
45033524	FEM-502-8FB-E4	345F34-4269-485400C2	PA12683-5733
45033537	FEM-621-12FB	345L01	PA12683-6133
45033558	FEM-622-12FB	345L01	PA12683-6133
45033775	FEM-751-12FB	345L01-4269-4849903P	PA12683-6133
45033779	FEM-751-16FB	345L01-4269-4849903P	PA12683-6133
45033801	FEM-752-12FB	345L01-4269-485400C2	PA12684-0233
45033825	FEM-752-16FB	345L01-4269-485400C2	PA12684-0233
45033836	FEMP-371-6FB	345L01-4538-4849903P	PA12684-6133
45033917	FEMP-372-6FB	345L01-4538-4849903P	PA12684-6133
45033924	FEP8X1	345L21	PA12687
45033925	FER10X150	345L21	PA12687
45033958	FER10X150	345N31	PA12688
45034025	FER1224	345N31	PA12688
45034028	FF10000-PSN	345P21	PA12688

45034029	FF10000-PSN	345P21	PA12688
45034043	FF10000-PSPU	3462-00600	PA12689
45034086	FF10000-PSPU	3462-00600	PA12689
45034146	FF10000-PSV	347-2	PA12690
45034182	FF10000-PSV	347-4007	PA12690
45034183	FF10010 C	3479 06 60	PA12690ATEX
45034515	FF10010 CV	347FIL	PA12690ATEX
45034630	FF10010-125C	347FIL	PA12691
45034631	FF10010-150C	347L04	PA12691
45034648	FF10016	347L04	PA12691ATEX
45034721	FF10020 C	347L04-8993-488980C2	PA12691ATEX
45034743	FF10020 CV	347L04-8993-488980C2	PA12692
45034744	FF10020-125C	347L11	PA12692
45034745	FF10021 C	347L11	PA12692ATEX
45034747	FF10021-125C	347L11-8993-488980C2	PA12692ATEX
45034766	FF10021-125CV	347L11-8993-488980C2	PA12693
45034767	FF10026	347L9101	PA12693
45034768	FF2510	347L9101	PA12694
45034776	FF2510	347L9101-8993-4889803D	PA12694
45034850	FF2516	347L9101-8993-4889803D	PA12695
45034946	FF2520	347L9101-8993-488980C2	PA12695
45034971	FF2520	347L9101-8993-488980C2	PA12696
45035076	FF2521	347L9201	PA12696
45035114	FF2521	347L9201	PA12697
45035373	FF2526	347L9201-8993-488980C2	PA12697
45035555	FF3810	347L9201-8993-488980C2	PA12698
45035612	FF3810	347N03	PA12698
45035689	FF3810 V	347N03	PA12699
45035691	FF3816	347N03-496131C2	PA12699
45035703	FF3820	347N03-496131C2	PA12700
45035708	FF3820	347N03-496482C2	PA12700
45035714	FF3820 V	347N03-496482C2	PA12701
45035742	FF3821	347N11-8993-481180C2	PA12701
45035752	FF3821	347N11-8993-481180C2	PA12702
45035789	FF3826	347N11-8993-4889803D	PA12702
45035869	FF5000-PSN	347N11-8993-4889803D	PA12703
45035870	FF5000-PSN	347N11-8993-488980C2	PA12703
45035871	FF5000-PSPU	347N11-8993-488980C2	PA12703
45035872	FF5000-PSPU	347N31	PA12703
45035937	FF5000-PSV	347N31	PA12704
45035995	FF5010 C	347N31-2995-481865C2	PA12704
45035999	FF5010 CE	347N31-2995-481865C2	PA12704
45036004	FF5010 CV	347N31-4538-481000C2	PA12704
45036061	FF5010-75C	347N31-4538-481000C2	PA12705-0033-00
45036112	FF5016	347N31-495905C2	PA12705-0033-00
45036236	FF5020 C	347N31-495905C2	PA12705-0133
45036239	FF5020 CV	347N3190-48865001N7	PA12705-0133
45036261	FF5020-75C	347N3190-48865001N7	PA12705-0233
45036262	FF5021 C	347N3197	PA12705-0233
45036366	FF5021 CE	347N3197	PA12705-0233
45036367	FF5021 CV	347N3197-2995-482730C2	PA12705-0233
45036368	FF5026	347N3197-2995-482730C2	PA12705-0233-00
45036369	FF7500-PSN	347N3197-2995-482740C2	PA12705-0233-00

45036370	FF7500-PSN	347N3197-2995-482740C2	PA12705-0233-85
45036375	FF7500-PSPU	347N3197-495900C2	PA12705-0233-85
45036376	FF7500-PSPU	347N3197-495900C2	PA12705-0233-91
45036379	FF7500-PSV	347N3197-495910N7	PA12705-0233-91
45036380	FF7500-PSV	347N3197-495910N7	PA12705-0233-92
45036381	FF7510 C	347N32-2995-482725C2	PA12705-0233-92
45036382	FF7510 CE	347N32-2995-482725C2	PA12705-1333
45036391	FF7510 CV	347N32-4538-481000C2	PA12705-1333
45036392	FF7510-100C	347N32-4538-481000C2	PA12705-4633ATEX
45036393	FF7516	347N33	PA12705-4633ATEX
45036395	FF7520 C	347N33	PA12705-4733ATEX
45036406	FF7520 CV	347P01-8993-4889803D	PA12705-4733ATEX
45036407	FF7520-100C	347P01-8993-4889803D	PA12705-5333
45036408	FF7520-100CV	347P01-8993-488980A2	PA12705-5333
45036409	FF7521 C	347P01-8993-488980A2	PA12705-5533
45036437	FF7521 CV	347P02	PA12705-5533
45036441	FF7521-100C	347P02	PA12705-5733
45036484	FF7526	347P02-8993-488980C2	PA12705-5733
45036506	FFM10-316	347P02-8993-488980C2	PA12705-6133
45036507	FFM10-625	347P02-8993-495865C4	PA12705-6133
45036567	FFM10-6MO	347P02-8993-495865C4	PA12705-6133
45036580	FFM10-825	347P21	PA12705-6133
45036594	FFM10-B	347P21	PA12705-9533ATEX
45036598	FFM10-HC	347P21-4270-485100C2	PA12705-9533ATEX
45036599	FFM10-M	347P21-4270-485100C2	PA12706-0033-00
45036641	FFM10-TI	347P22	PA12706-0033-00
45036810	FFM12-316	347P22	PA12706-0233
45036811	FFM12-625	348-10032-0	PA12706-0233
45036813	FFM12-6MO	34982-10-4	PA12706-0233
45036814	FFM12-B	34982-10-6	PA12706-0233
45036839	FFM12-HC	34982-12-4	PA12706-0233-92
45036884	FFM12-M	34982-12-6	PA12706-0233-92
45036918	FFM12-TI	34982-14-4	PA12706-1333
45036925	FFM14-316	34982-14-6	PA12706-1333
45036926	FFM15-316	34982-14-6C	PA12706-5133
45036927	FFM16-316	34982-14-8	PA12706-5133
45036928	FFM16-6MO	34982-16-6	PA12706-5733
45036930	FFM16-B	34982-17-6	PA12706-5733
45036931	FFM16-TI	34982-18-8	PA12706-6133
45036933	FFM18-316	34982-22-10	PA12706-6133
45036934	FFM18-625	34982-22-8	PA12706-6133
45036935	FFM18-6MO	34982-26-12	PA12706-6133
45036936	FFM18-B	34982-8-4	PA12706-9533ATEX
45036937	FFM20-316	34DX70	PA12706-9533ATEX
45036938	FFM20-6MO	34DX70	PA12707-0033
45036940	FFM20-HC	34KAAK13SPN	PA12707-0033
45036941	FFM20-TI	34KAAK17SPN	PA12707-0233
45036942	FFM22-316	34KAAK21SPN	PA12707-0233
45036943	FFM2-316	34KAAK26SPN	PA12707-0233
45036947	FFM25-316	34KAIW13SPN	PA12707-0233
45036948	FFM25-6MO	34KAIW17SPN	PA12707-0233-92
45036949	FFM25-HC	34KAIW21SPN	PA12707-0233-92
45036950	FFM25-M	34KAIW26SPN	PA12707-4733ATEX

45036952	FFM25-TI	34KATF06SPN	PA12707-4733ATEX
45036964	FFM3-316	34KATF08SPN	PA12707-6133
45036969	FFM3-B	34KATF10SPN	PA12707-6133
45036974	FFM3-HC	34KATF13SPN	PA12708
45037227	FFM4-316	34KATF16SPN	PA12708
45037283	FFM6-316	34KATF19SPN	PA12708ATEX
45037563	FFM6-625	34P-0002	PA12708ATEX
45037565	FFM6-6MO	34P-0003	PA12709
45037736	FFM6-B	34P-0004	PA12709
45037830	FFM6-HC	34P-0007	PA12709
45037840	FFM6-M	34P-0008	PA12709
45037938	FFM6-TI	34P-0011	PA12709ATEX
45038066	FFM8-316	34P-0012	PA12709ATEX
45038132	FFM8-625	34P-0014	PA12710
45038133	FFM8-6MO	34P-0015	PA12710
45038134	FFM8-B	34P-0016	PA12711
45038183	FFM8-M	34P-0019	PA12711
45038186	FG3PKCG	34P-0024	PA12713
45038225	FGHBL10-3/8BL	34P-0130	PA12713
45038426	FGHBL12-1/2BL	34P-0149	PA12713
45038497	FGHBL12-3/8BL	34P1-104013011	PA12713
45039393	FGHBL6-1/8BL	34P1-104023011	PA12713ATEX
45039533	FGHBL7-1/4BL	34P1-105023011	PA12713ATEX
45039551	FGHBL7-1/8BL	34P1-106023011	PA12714
45039852	FGHBL8-1/4BL	34P1-114013011	PA12714
45051020	FGHBL9-1/4BL	34P1-116013011	PA12715
45051030	FGHBL9-3/8BL	34P1-116023011	PA12715
45051031	FH2BZ 10-1/2-SS	34P1-116033021	PA12716-0033
45051033	FH2BZ 12-1/2-SS	34P1-117013011	PA12716-0033
45051035	FH2BZ 6-1/4-SS	34P1-117023011	PA12716-0033-00
45051073	FH2BZ 6-1/8-SS	34P1-122023013	PA12716-0033-00
45051083	FH2BZ 8-1/4-SS	34-P-123	PA12716-0133
45051126	FH4BZ 10-1/2-SS	34-P-130	PA12716-0133
45051129	FH4BZ 6-1/8-SS	34-P-143	PA12716-0233
45051146	FH4BZ 8-1/4-SS	34P2-104023011	PA12716-0233
45051156	FH4BZ 8-3/8R-SS	34P2-114013011	PA12716-0233
45051168	FH4BZ 8-3/8-SS	34P2-116013011	PA12716-0233
45051175	FHS310/14CFX	34P2-116023011	PA12716-0233-00
45051184	FHS310CFBP	34P2-116033011	PA12716-0233-00
45051185	FHS310CF-K	34P2-117013011	PA12716-0233-92
45051186	FHS310CFX	34P2-117023011	PA12716-0233-92
45051188	FHS310SS	34P2-117023021	PA12716-1333
45051192	FHS312.4404X	34P2-120023013	PA12716-1333
45051193	FHS312/31B/4404X	34-P-278	PA12716-4533ATEX
45051195	FHS312CF-K	34-P-60	PA12716-4533ATEX
45051200	FHS312CFX	34SFAK13SXN	PA12716-4633ATEX
45051206	FHS312SS	34SFAK13SXNS	PA12716-4633ATEX
45051208	FHS314CF-K	34SFAK17SXN	PA12716-4733ATEX
45051216	FHS314CFX	34SFAK21SXN	PA12716-4733ATEX
45051219	FHS316CF-K	34SFIW13SXN	PA12716-4833ATEX
45051228	FHS316CFX	34SFIW17SXN	PA12716-4833ATEX
45051230	FHS320CFX	34SFIW21SXN	PA12716-5133
45051231	FHS320SS	34SFTF06SXN	PA12716-5133

45051232	FHS32CFX	34SFTF10SXN	PA12716-5333
45051275	FHS32SS	34SFTF13SXN	PA12716-5333
45051292	FHS32SS-K	34SFTF16SXN	PA12716-5533
45051293	FHS33.4404X	350-10019-0	PA12716-5533
45051332	FHS33CFBP	350-10025-0	PA12716-5733
45051342	FHS33CF-K	3510FIL	PA12716-5733
45051348	FHS33CFX	3510FIL	PA12716-6133
45051349	FHS33SS	3511-20	PA12716-6133
45051356	FHS34.4404X	3511FIL	PA12716-6133-89
45051368	FHS34/31B/4404X	3511FIL	PA12716-6133-89
45051369	FHS34CFBP	3512FIL	PA12716-6933
45051370	FHS34CF-K	3512FIL	PA12716-6933
45051372	FHS34CFX	3513FIL	PA12716-9733ATEX
45051373	FHS34SS	3513FIL	PA12716-9733ATEX
45051374	FHS35/10.4404X	3514S	PA12716-9833ATEX
45051375	FHS35/10/31B/4404X	3514S	PA12716-9833ATEX
45051377	FHS35/10CF-COUPLE	3514S-2	PA12717-0033
45051378	FHS35/10CF-K	3514S-2	PA12717-0033
45051379	FHS35/10CFX	3516-2	PA12717-0033
45051380	FHS35/10SS	3516-2	PA12717-0033
45051381	FHS35/12CFBP	3516S	PA12717-0033-00
45051382	FHS35/12CFX	3516S	PA12717-0033-00
45051383	FHS35/12SS	3519FIL	PA12717-0233
45051384	FHS35CFBP	3519FIL	PA12717-0233
45051386	FHS35CF-K	351TC-10	PA12717-4533ATEX
45051387	FHS35CFX	351TC-12	PA12717-4533ATEX
45051388	FHS35SS	351TC-4	PA12717-5133
45051389	FHS36.4404X	351TC-6	PA12717-5133
45051391	FHS36/10CFX	351TC-8	PA12717-6133
45051392	FHS36/14CFX	3524 00 10	PA12717-6133
45051393	FHS36/31B/4404X	3524 00 13	PA12717-6133
45051394	FHS36CFBP	3524 00 17	PA12717-6133
45051395	FHS36CF-K	3524 00 19	PA12718-0033
45051396	FHS36CFX	3524 00 21	PA12718-0033
45051397	FHS36SS	3524A00 10	PA12718-0233
45051398	FHS38/12.4404X	3527 00 10	PA12718-0233
45051401	FHS38/12CF-K	3527 00 13	PA12718-6133
45051402	FHS38/12CFX	3527 00 17	PA12718-6133
45051403	FHS38/12SS	3527 00 19	PA12719-0033-00
45051406	FHS38/12VITCF-K	3527 00 21	PA12719-0033-00
45051407	FHS38CF-K	3528 00 10	PA12719-0233
45051408	FHS38CFX	3528 00 13	PA12719-0233
45051410	FHS38SS	3528 00 17	PA12719-0233
45051415	FHS610CF-K	3528 00 19	PA12719-0233
45051425	FHS610CFX	3528A00 10	PA12719-4833ATEX
45051437	FHS610SS	3529 00 10	PA12719-4833ATEX
45051447	FHS612CFX	3529 00 13	PA12719-6133
45051448	FHS62CF-K	3529 00 17	PA12719-6133
45051449	FHS62CFX	3538 03 19	PA12721-0033
45051450	FHS63CFBP	3538 04 10	PA12721-0033
45051468	FHS63CF-K	3538 04 19	PA12721-0233
45051469	FHS63CFX	3538 06 10	PA12721-0233
45051470	FHS63SS	3538 06 13	PA12721-5133

45051482	FHS63SS-K	3538 06 19	PA12721-5133
45051487	FHS64/12CFBP	3538 08 10	PA12721-5533
45051488	FHS64/12CFX	3538 08 13	PA12721-5533
45051498	FHS64CFBP	3538 08 17	PA12721-6133
45051502	FHS64CF-K	3538 10 13	PA12721-6133
45051522	FHS64CFX	3538 10 17	PA12843-0033-00
45051523	FHS64SS	3538 10 21	PA12843-0033-00
45051524	FHS64SS-K	3538 12 17	PA12843-0233
45051525	FHS64VITCF-K	3538 12 21	PA12843-0233
45051544	FHS65/12CFBP	3538A04 10	PA12843-5133
45051555	FHS65/12CF-K	3538A06 10	PA12843-5133
45051582	FHS65/12CFX	3538A08 13	PA12843-6133
45051584	FHS65/12SS	3539 04 10	PA12843-6133
45051585	FHS65CFBP	3539 04 19	PA12851
45051636	FHS65CF-K	3539 06 10	PA12851
45051653	FHS65CFX	3539 06 13	PA12851
45051668	FHS65SS	3539 08 13	PA12851
45051672	FHS66CFBP	3539 08 17	PA12852
45051699	FHS66CF-K	3539 10 17	PA12852
045060060	FHS66CFX	3539A06 13	PA12853
045060060	FHS66SS	3549 04 10	PA12853
045120012	FHS68CF-K	3549 04 13	PA12877-0233
045120012	FHS68CFX	3549 04 19	PA12877-0233
45212085	FHS68SS	3549 06 10	PA12923-0233
45215166	FHS68VITCF-K	3549 06 13	PA12923-0233
45216087	FHSF310/14CF	3549 06 17	PA12924-0233
045800000	FHSF310CF	3549 08 13	PA12924-0233
46030163	FHSF312CF	3549 08 17	PA12925-0033-00
46211518	FHSF32CF	3549 10 17	PA12925-0033-00
46213952	FHSF33CF	356-00003-8	PA12925-0233
46213959	FHSF33CFBP	356-00033-8	PA12925-0233
46213960	FHSF34CF	356-30125-0	PA12925-6133
46213963	FHSF34CFBP	356-30185-0	PA12925-6133
46214125	FHSF35/10CF	356-30206-0	PA140/025/02
46214233	FHSF35/10CFBP	356-30244-0	PA140/025/03
46214239	FHSF35/12CF	356-30315-0	PA16141
46214500	FHSF36/14CF	356-31112-0	PA16141
46214506	FHSF36CF	356-31137-0	PA16142
46214539	FHSF36CFBP	356-32283-0	PA16142
46214540	FHSF38CF	356-65012-0	PA16143
46214870	FHSF38CFBP	356-65060-0	PA16143
46215591	FHSF63/20CFBP	356FIL	PA16144
46215593	FHSF63CF	356FIL	PA16144
46215594	FHSF64/25CFBP	358-16200-0	PA16165
047040004	FHSF64CF	358-16430-0	PA16165
047040004	FHSF65/27CFBP	358-16540-0	PA16165
48061000	FHSF65CF	358-18220-0	PA16165
48061000	FHSF66CF	358-20240-0	PA16165ATEX
48104340	FHSF68CF	358-20330-0	PA16165ATEX
48104340	FHSFM34CF	358-20400-0	PA16166
48104350	FI201B-8899	358-24260-0	PA16166
48104350	FI389429	358-24440-0	PA16166
48196404	FI60F6633	3583FIL	PA16166

48196404	FICT6660	3583FIL	PA16167
48196408	FICT6660-K	359-15220-0	PA16167
48196408	FK-45051014	359-15300-0	PA16168
48299550	FK-45051193	359-15330-0	PA16168
48299550	FK-45051219	359-15350-8	PA16169
48426920	FK-45051343	359-15420-8	PA16169
48426920	FK-45051386	359-15470-8	PA16170
48427020	FK-45051396	359-15490-8	PA16170
48427020	FK-45051397	35C82-10-6B	PA16170ATEX
48453820	FK-45051424	35C82-10-6BK	PA16170ATEX
48453820	FK-4D02VA208N	35C82-121-4BK	PA16171-0033-00
48658640	FK-CE016	35C82-15-8B	PA16171-0033-00
48658640	FK-CE016-L	35C82-15-8BK	PA16171-0233
48658650	FK-CE016-N	35C82-18-10BK	PA16171-0233
48658650	FK-CE016-S	35C82-6-4BK	PA16171-0233
48852020	FK-CE016-U	35H3R1FA32B60ABAF2	PA16171-0233
48852020	FK-CE025	35H3R1FA32B60ABAF2	PA16171-0233-00
48886001	FK-CE025-L	35H3R1TA32B70ACAF1T	PA16171-0233-00
48886001	FK-CE025-N	35H3R1TA32B70ACAF1T	PA16171-0233-91
48886003	FK-CE025-S	35-P-14	PA16171-0233-91
48886003	FK-CE025-T	35-P-15-1	PA16171-0433
48886004	FK-CE025-U	35-P-15-2	PA16171-0433
48886004	FK-CE032	35-P-41	PA16171-1333
48886005	FK-CE032-L	35-P-59	PA16171-1333
48886005	FK-CE032-N	35-P-69	PA16171-4533ATEX
48899350	FK-CE032-S	35-P-74	PA16171-4533ATEX
48899350	FK-CE032-T	35-P-8	PA16171-4633ATEX
048976000	FK-CE032-U	35-P-84	PA16171-4633ATEX
49245940	FK-CE040	35-P-9-1	PA16171-4733ATEX
49245940	FK-CE040-L	35-P-92	PA16171-4733ATEX
049261000	FK-CE040-N	35-P-9-2	PA16171-4833ATEX
49264540	FK-CE040-S	35-P-93	PA16171-4833ATEX
49264540	FK-CE040-T	35-P-95	PA16171-5133
49423701	FK-CE040-U	3600 04 00	PA16171-5133
49423701	FK-CE050	3600 06 00	PA16171-5733
049470002	FK-CE050-L	3600 08 00	PA16171-5733
049471003	FK-CE050-N	3600 10 00	PA16171-6133
049471004	FK-CE050-S	3600 14 00	PA16171-6133
49514101	FK-CE050-U	3600-32-00120-0000-000000	PA16171-6133
49514101	FK-CE063	3600-32-00120-0000-000000	PA16171-6133
49514201	FK-CE063-L	3600-32-00220-0000-000000	PA16171-6933
49514201	FK-CE063-S	3600-32-00220-0000-000000	PA16171-6933
49517601	FK-CE063-U	3600-32-00250-0000-000000	PA16172-0033
49517601	FK-D1VW9160N	3600-32-00250-0000-000000	PA16172-0033
49527501	FK-D31DW75139N	3600-32-00320-0000-000000	PA16172-0233
49527501	FK-D3W30199N	3600-32-00320-0000-000000	PA16172-0233
49534001	FK-D3W3032N	3600-32-00330-0000-000000	PA16172-0233-92
49534001	FK-D3W3066N	3600-32-00330-0000-000000	PA16172-0233-92
49658503	FK-D3W3098N	3600-32-00450-0000-000000	PA16172-1333
49658503	FK-PRM3	3600-32-00450-0000-000000	PA16172-1333
049780000	FK-TEANB497E70	3600-32-00465-1000-000000	PA16172-4833ATEX
0050081703	FL.69111X	3600-32-00465-1000-000000	PA16172-4833ATEX
0050081903	FL.69112	3600-32-00500-0000-000000	PA16172-5133

0050082403	FL.69122	3600-32-00500-0000-000000	PA16172-5133
0050703104	FL.69212	3600-32-00550-0000-000000	PA16172-6133
0050706404	FL.69222	3600-32-00550-0000-000000	PA16172-6133
0050707604	FL.69322	3600-32-00600-0000-000000	PA16172-9833ATEX
0050708304	FL05001OR	3600-32-00600-0000-000000	PA16172-9833ATEX
051793001	FL10001OR	3600-32-00604-0000-000000	PA16173-0233
051800000	FL15001OR	3600-32-00604-0000-000000	PA16173-0233
52510700	FL69111	3600-32-00650-0000-000000	PA16173-6133
52530507	FL69113	3600-32-00650-0000-000000	PA16173-6133
52530906	FL69121	3600-32-00700-0000-000000	PA16174-0033-00
52538508	FL69123	3600-32-00700-0000-000000	PA16174-0033-00
52551504	FL69211	3600-32-00850-0000-000000	PA16174-0233
52551806	FL69213	3600-32-00850-0000-000000	PA16174-0233
52552608	FL69221	3600-32-00950-0000-000000	PA16174-0233-00
52554600	FL69223	3600-32-00950-0000-000000	PA16174-0233-00
52559300	FL69311	3600-32-01000-0000-000000	PA16174-1333
52559505	FL69312	3600-32-01000-0000-000000	PA16174-1333
52559700	FL69313	3600-32-01050-0000-000000	PA16175-0233
52559807	FL69321	3600-32-01050-0000-000000	PA16175-0233
52560104	FL69323	3600-32-01100-0000-000000	PA16176-0033-00
52560708	FLA10518	3600-32-01100-0000-000000	PA16176-0033-00
52561003	FL-H15FF4	3600-32-01150-0000-000000	PA16176-0133
52566005	FL-H15FF4-CS	3600-32-01150-0000-000000	PA16176-0133
52593002	FM CAL CERT	3600-32-01500-0000-000000	PA16176-0233
52593304	FM04LLCF	3600-32-01500-0000-000000	PA16176-0233
52595609	FM04LLSSA	3600-32-01550-0000-000000	PA16176-0233
52595706	FM06L71	3600-32-01550-0000-000000	PA16176-0233
52596206	FM06LCF	3600-32-01600-0000-000000	PA16176-0233-91
52596605	FM06LCFBP	3600-32-01600-0000-000000	PA16176-0233-91
054803000	FM06LLCF	3600-32-01650-0000-000000	PA16176-0233-92
55002005	FM06LLSSA	3600-32-01650-0000-000000	PA16176-0233-92
55003001	FM06LNBR71	3600-32-01700-0000-000000	PA16176-4733ATEX
55007406	FM06LSSA	3600-32-01700-0000-000000	PA16176-4733ATEX
55007600	FM06LVITCF	3600-32-01750-0000-000000	PA16176-4833ATEX
55013309	FM06LVITSSA	3600-32-01750-0000-000000	PA16176-4833ATEX
55034306	FM06S71	3600-32-01800-0000-000000	PA16176-6133
55039901	FM06SCF	3600-32-01800-0000-000000	PA16176-6133
55040004	FM06SNBR71	3600-32-01840-0000-000000	PA16177-0233
55041809	FM06SSSA	3600-32-01840-0000-000000	PA16177-0233
55043704	FM06SVITCF	3600-32-02200-0000-000000	PA16177-6133
55048404	FM06SVITSSA	3600-32-02200-0000-000000	PA16177-6133
55050506	FM08L71	3600-32-02300-0000-000000	PA16178-0033-00
55055508	FM08LCF	3600-32-02300-0000-000000	PA16178-0033-00
55057900	FM08LCFBP	3600-32-02450-0000-000000	PA16178-0233
55058507	FM08LNBR71	3600-32-02450-0000-000000	PA16178-0233
55060404	FM08LSSA	3600-32-03870-0000-000000	PA16178-6133
55063802	FM08LVITCF	3600-32-03870-0000-000000	PA16178-6133
55065104	FM08LVITSSA	3601 00 00 60	PA16366
55068006	FM08S71	3601 00 00 61	PA16366
55069509	FM08SCF	3601 04 10	PA16367
55070205	FM08SNBR71	3601 04 13	PA16367
55079300	FM08SSSA	3601 04 19	PA16368
55081304	FM08SVITCF	3601 04 52	PA16368

55081800	FM08SVITSSA	3601 04 56	PA16369
55083005	FM10L71	3601 06 10	PA16369
55083706	FM10L71BP	3601 06 13	PA16370
55084206	FM10LCF	3601 06 19	PA16370
55084303	FM10LCFBP	3601 06 60	PA16370ATEX
55084400	FM10LMS	3601 08 10	PA16370ATEX
55084508	FM10LNBR71	3601 08 13	PA16372
55089801	FM10LSSA	3601 08 17	PA16372
55090109	FM10LVITCF	3601 08 60	PA16372
55092802	FM10LVITSSA	3601 10 13	PA16372
55093400	FM10LZNFE3T	3601 10 17	PA16373
55094104	FM10S71	3601 10 21	PA16373
55094406	FM10S71VERS	3601 12 13	PA16374
55094805	FM10SCF	3601 12 17	PA16374
55095003	FM10SNBR71	3601 12 21	PA16375
56021100	FM10SSSA	3601 14 17	PA16375
56042205	FM10SVITCF	3601 14 21	PA16376
56052006	FM10SVITSSA	36-01-031	PA16376
056519004	FM12L71	3602 04 00	PA16378
060096001	FM12LCF	3602 06 00	PA16378
060149035	FM12LCFBP	3602 08 00	PA16380
060238000	FM12LNBR71	3602 10 00	PA16380
61090102	FM12LSSA	3602 12 00	PA16381
61090102	FM12LVITCF	3602 14 00	PA16381
071338003	FM12LVITSSA	3602FIL	PA16383
071338004	FM12S71	3602FIL	PA16383
071921003	FM12S71BP	3603 04 10	PA16389-0200
076955000	FM12SCF	3603 06 10	PA16389-0200
077960199	FM12SCFBP	3603 06 13	PA16404
077960199	FM12SNBR71	3603 08 10	PA16404
84037988	FM12SSSA	3603 08 13	PA16405
84062146	FM12SVITCF	3603 10 13	PA16405
84100209	FM12SVITSSA	3603 10 17	PA16405
84100407	FM14S71	3603 12 17	PA16405
84431325	FM14SCF	3603 14 21	PA16406
86533127	FM14SNBR71	3603FIL	PA16406
88000005	FM14SSSA	3603FIL	PA16407
88000005	FM14SVITCF	3604 04 00	PA16407
88000010	FM15L71	3604 06 00	PA16409
88000010	FM15LCF	3604 08 00	PA16409
88000011	FM15LCFBP	3604 10 00	PA16409ATEX
88000011	FM15LNBR71	3604 12 00	PA16409ATEX
88000014	FM15LSSA	3604 14 00	PA16410
88000014	FM15LVITCF	360451J	PA16410
88000015	FM15LVITSSA	360451J	PA16412-0033-00
88000015	FM16S71	360452J	PA16412-0033-00
88000018	FM16S71BP	360452J	PA16412-0233
88000018	FM16SCF	360480J	PA16412-0233
88006492	FM16SNBR71	360480J	PA16412-0233-00
88006492	FM16SSSA	360490J	PA16412-0233-00
88006493	FM16SVITCF	360490J	PA16412-0233-92
88006493	FM16SVITSSA	3606 04 00	PA16412-0233-92
88007586	FM18L71	3606 06 00	PA16412-1333

88007586	FM18LCF	3606 08 00	PA16412-1333
88007587	FM18LCFBP	3606 10 00	PA16412-1333-00
88007587	FM18LNBR71	3606 12 00	PA16412-1333-00
88007588	FM18LSSA	3606 14 00	PA16412-4533ATEX
88007588	FM18LVITCF	3606 56 00	PA16412-4533ATEX
89210900	FM18LVITSSA	3608 04 10	PA16412-4733ATEX
89210900	FM20S71	3608 06 10	PA16412-4733ATEX
89210910	FM20SCF	3608 06 13	PA16412-5133
89210910	FM20SCFBP	3608 08 10	PA16412-5133
89213401	FM20SNBR71	3608 08 13	PA16412-6133
89213401	FM20SSSA	3608 10 13	PA16412-6133
89216201	FM20SVITCF	3608 10 17	PA16412-9733ATEX
89216201	FM20SVITSSA	3608 12 17	PA16412-9733ATEX
89216487	FM22L71	3608 14 21	PA16412-9833ATEX
89216487	FM22LCF	3608 60 18	PA16412-9833ATEX
89216489	FM22LCFBP	3609 04 10	PA16413-0033-00
89216489	FM22LNBR71	3609 04 13	PA16413-0033-00
89216500	FM22LSSA	3609 06 10	PA16413-0233
89216500	FM22LVITCF	3609 06 13	PA16413-0233
89216504	FM22LVITSSA	3609 08 10	PA16413-4733ATEX
89216504	FM25S71	3609 08 13	PA16413-4733ATEX
89216508	FM25SCF	3609 08 17	PA16413-9733ATEX
89216508	FM25SNBR71	3609 10 13	PA16413-9733ATEX
89216600	FM25SSSA	3609 10 17	PA16414-0033
89216600	FM25SVITCF	3609 12 13	PA16414-0033
89217003	FM25SVITSSA	3609 12 17	PA16414-0233
89217003	FM26122112	3609 12 21	PA16414-0233
89217701	FM26122122	3609 14 17	PA16414-6133
89217701	FM26122212	3609 14 21	PA16414-6133
89217711	FM26122222	3609 56 11	PA16415-0233
89217711	FM26122312	3609 60 14	PA16415-0233
89217801	FM26122322	3609 60 18	PA16415-1333
89217801	FM26123332	361-07126-2	PA16415-1333
89217805	FM26132112	3610FIL	PA16415-5733
89217805	FM26132122	3610FIL	PA16415-5733
89217898	FM26132212	3611 00 10	PA16417-0233
89217898	FM26132222	3611 00 19	PA16417-0233
89217899	FM26132312	361-11274-8	PA16463-0233
89217899	FM26132322	361-11314-8	PA16463-0233
89217900	FM26133332	361-11354-8	PA206Q-133
89217900	FM26222112	361-12284-3	PA208T-133
89217904	FM26222122	361-15264-8	PA210T-133
89217904	FM26222212	361-15364-8	PA50470-0010
89217908	FM26222222	3614 04 10	PA50470-0010
89217908	FM26223132	3614 04 13	PA50470-0025
89219010	FM26223232	3614 04 19	PA50470-0025
89219010	FM26232112	3614 06 10	PA50470-0040
89219210	FM26232122	3614 06 13	PA50470-0040
89219210	FM26232212	3614 08 10	PA50470-0050
89219222	FM26232222	3614 08 13	PA50470-0050
89219222	FM26233132	3614 10 17	PA50470-0050
89220109	FM26322112	3614 12 17	PA50470-0050
89220109	FM26322122	3614 12 21	PA50470-0065

89220207	FM26322212	361-4044	PA50470-0065
89220207	FM26322222	3614FIL	PA50470-0066
89220209	FM26323132	3614FIL	PA50470-0066
89220209	FM26323232	3616 04 00	PA50470-0080
89220409	FM26332112	3616 06 00	PA50470-0080
89220409	FM26332122	3616 08 00	PA50470-0100
89221108	FM26332212	3616 10 00	PA50470-0100
89221108	FM26332222	3616 12 00	PA50470-0100
89223428	FM26333132	3616 14 00	PA50470-0100
89223428	FM26333232	3618 04 10	PA50470-0110
91224027	FM26422112	3618 04 19	PA50470-0110
91224352	FM26422122	3618 06 10	PA50470-0125
91224557	FM26422212	3618 06 13	PA50470-0125
91224560	FM26422222	3618 06 19	PA50470-0125
91224561	FM26422312	3618 08 10	PA50470-0125
91224567	FM26422322	3618 08 13	PA50470-0160
91224568	FM26423132	3618 10 17	PA50470-0160
91224782	FM26423232	3620 04 00	PA50470-0160
91224941	FM26432112	3620 06 00	PA50470-0160
91225207	FM26432122	3620 08 00	PA50470-0190
91225255	FM26432212	3620 10 00	PA50470-0190
91225258	FM26432222	3620 12 00	PA50470-0200
91236609	FM26432312	3620 14 00	PA50470-0200
91239149	FM26432322	3621 04 10	PA50470-0200
91245163	FM26433232	3621 04 13	PA50470-0200
91246239	FM28L71	3621 06 10	PA50470-0250
91249495	FM28LCF	3621 06 13	PA50470-0250
91249729	FM28LCFBP	3621 08 10	PA50470-0260
91249746	FM28LNBR71	3621 08 13	PA50470-0260
91259551	FM28LSSA	3621 10 13	PA50470-0280
91259620	FM28LVITCF	3621 10 17	PA50470-0280
91262642	FM28LVITSSA	3621 12 17	PA50470-0285
91273169	FM2DDDKV	3621 12 21	PA50470-0285
91273171	FM2DDDKVX960	3621 14 21	PA50470-0300
91281804	FM2DDDSV	3622 04 05	PA50470-0300
91281859	FM2DDKV	3622 04 53	PA50470-0320
91282257	FM2DDKVXG047	3622 06 05	PA50470-0320
91284630	FM2DDSV	3622 08 08	PA50470-0350
91286804	FM30S71	3622 08 56	PA50470-0350
91288022	FM30SCF	3622 10 08	PA50470-0400
91288149	FM30SNBR71	3622 10 56	PA50470-0400
91288170	FM30SSSA	3622 12 08	PA50470-0500
099049001	FM30SVITCF	3622 12 10	PA50470-0500
099930001	FM30SVITSSA	3622 12 62	PA52340-0320
114500001	FM35L71	3622 14 14	PA52340-0320
114500002	FM35LCF	3622 14 62	PA53500-0025
159.003235	FM35LNBR71	362410J	PA53500-0025
200033501	FM35LSSA	362410J	PA53500-0050
0261109910	FM35LVITCF	362460J	PA53500-0050
0261109910	FM35LVITSSA	362460J	PA53500-0080
0261109911	FM38S71	362475J	PA53500-0080
0261109911	FM38SCF	362475J	PA53500-0100
0261109912	FM38SNBR71	362496J	PA53500-0100

0261109912	FM38SSSA	362496J	PA53500-0100-V
0261109917	FM38SVITCF	362498J	PA53500-0100-V
0261109917	FM38SVITSSA	362498J	PA53500-0125
0261109919	FM3DDDKV	362510J	PA53500-0125
0261109919	FM3DDDSV	362510J	PA53500-0130
0261109920	FM3DDKV	362518J	PA53500-0130
0261109920	FM3DDSV	362518J	PA53500-0135
0261109921	FM42L71	362524J	PA53500-0135
0261109921	FM42LCF	362524J	PA53500-0160
0261109922	FM42LCFBP	362530J	PA53500-0160
0261109922	FM42LNBR71	362530J	PA53500-0160
0261210800	FM42LSSA	362560J	PA53500-0160
0261210800	FM42LVITCF	362560J	PA53500-0160ATEX
0261211000	FM42LVITSSA	362570J	PA53500-0160ATEX
0261211000	FM4DDFVHT	362570J	PA53500-0200
0266211200	FM4DDTVHT	3626 04 00	PA53500-0200
0266211200	FM50-A	3626 06 00	PA53500-0250
0266211400	FM50-A	3626 08 00	PA53500-0250
0266211400	FM50-B	3626 10 00	PA53500-0250ATEX
0266211600	FM50-B	3626 12 00	PA53500-0250ATEX
0266211600	FM50-K	3626 14 00	PA53500-0300
0266211800	FM50-K	362620J	PA53500-0300
0266211800	FM66232212	362620J	PA53500-0320
401079068	FM6DDKV	362630J	PA53500-0320
401403019	FM800-A	362630J	PA53500-0350
401403038	FM800-A	3629 04 10	PA53500-0350
401403042	FM800-B	3629 06 10	PA53500-0400
401403066	FM800-B	3629 06 13	PA53500-0400
401403092	FMD/3000733	3629 08 10	PA53500-0500
404811000	FMD/3000733	3629 08 13	PA53500-0500
404811000	FMD04-1	3629 10 13	PA53500-0560
414811000	FMD04-1	3631 04 10	PA53500-0560
414811000	FMD06-1	3631 04 13	PA53500-0600
432158262	FMD06-1	3631 04 19	PA53500-0600
432549262	FMD06-2	3631 06 10	PA53500-1000
460104801	FMD06-2	3631 06 13	PA53500-1000
460104801	FMD07-1B	3631 08 10	PA53500-2500
460104802	FMD07-1B	3631 08 13	PA53500-2500
460104802	FMD07-2B	3631 08 17	PA53510-0125
460104803	FMD07-2B	3631 10 13	PA53510-0125
460104803	FMD08-2	3631 10 17	PA53510-0160
460104804	FMD08-2	3631 10 21	PA53510-0160
460104804	FMD09-2B	3631 12 17	PA53510-0200ATEX
461808262	FMD09-2B	3631 12 21	PA53510-0200ATEX
461824262	FMD10-2	3631 14 21	PA53510-0250
474695263	FMD10-2	3636 04 10	PA53510-0250
481203004	FMD12-2	3636 06 10	PA53510-0300
481203004	FMD12-2	3636 06 13	PA53510-0300
481203018	FMDG1-1	3636 08 10	PA53510-0400ATEX
481203018	FMDG1-1	3636 08 13	PA53510-0400ATEX
481203019	FMUD5BBAXXXL	3636 10 17	PA53510-0440
481203019	FMUD5EBAXXXL	3636 12 17	PA53510-0440
481203020	FMUDABBA155L	3636 12 21	PA53510-0500

481203020	FMUDAEBA155L	3639 04 00	PA53510-0500
481203028	FMUE5BBAXXXL	3639 06 00	PA53510-0525
481203028	FMUE5EBAXXXL	3639 08 00	PA53510-0525
481203032	FMUEBBBA178L	3639 10 00	PA53510-0600
481203032	FMUEBEBA178L	3639 12 00	PA53510-0600
481203034	FMUF1FVMU12H	3639 14 00	PA53510-0700
481203034	FMUF1FVMU12HS01	364880J	PA53510-0700
481203036	FMUF1GVMU14M	364880J	PA53510-0800
481203036	FMUF1KVMU12H	364884J	PA53510-0800
481203041	FMUF1KVMU14M	364884J	PA53510-0850
481203041	FMUF1KVMU14M-05	3648FIL	PA53510-0850
481203045	FMUF1MBMHG08	3648FIL	PA53510-2200
481203045	FMUF1MVMS08	364FIL	PA53510-2200
481203046	FMUF1MVMU14H	364FIL	PA53530-0025
481203046	FMUF1MVMU14M	3651 06 19	PA53530-0025
481203047	FMUF1NVMU12H	3651 10 17	PA53530-0035
481203047	FMUF2FVMU12H	3656FIL	PA53530-0035
481203048	FMUF2GVRU12H	3656FIL	PA53530-0050
481203048	FMUF2KHAU12M	365FIL	PA53530-0050
481203049	FMUF2KVMU12H	365FIL	PA53530-0050
481203049	FMUF2KVMU14H	3664FIL	PA53530-0050
481203050	FMUF2KVMU14M	3664FIL	PA53530-0100
481203050	FMUF2MVMU14H	3666 04 06	PA53530-0100
481203053	FMUF2NVMU12H	3666 04 08	PA53530-0125
481203053	FMUF3KVMU12H	3666 06 08	PA53530-0125
481203055	FMUF3KVMU14M	3666 06 10	PA53530-0160
481203055	FMUF3KVMU14M10	3666 06 12	PA53530-0160
481203058	FMUF3MVMS08	3666 08 10	PA53530-0170
481203058	FMUF3MVMU14H	3666 08 12	PA53530-0170
481203061	FMUF3MVMU14H10	3666 10 12	PA53530-0200
481203061	FMUF3MVMU14M	3666 12 14	PA53530-0200
481203064	FMUF3NVMU12H	3667 06 56	PA53530-0240
481203064	FMUF3NVMU14H	3667 10 60	PA53530-0240
481203066	FMUF4MVMS08	3667 12 62	PA53530-0250
481203066	FMUF4NVMU12H	3668 06 04	PA53530-0250
481203067	FMUF5KVMU14M0	3669 04 10	PA53530-0300
481203067	FMUF5MVMU14H	3669 04 19	PA53530-0300
481203077	FMUF7KVMU14H	3669 06 10	PA53530-0320
481203077	FMUF7KVMU14M	3669 06 13	PA53530-0320
481203080	FMUF7MVMU14H	3669 08 10	PA53530-0350
481203080	FMUG1EBPM10L	3669 08 13	PA53530-0350
481203081	FMUG2EBPG02L	3669 10 13	PA53530-0400
481203081	FMUG2FBMG02L	3669 10 17	PA53530-0400
481203082	FMUM1HVAU12MS01	3669 12 13	PA53530-0450
481203082	FMUM3FVMU12H	3669 12 17	PA53530-0450
481203083	FMUM3GVMU14M	3669 14 21	PA53530-0500
481203083	FMUM3HVMU12H	3675 04 10	PA53530-0500
481203084	FMUM3KVMS08	3675 04 13	PA53530-0540
481203084	FMUM3KVMU12H	3675 06 10	PA53530-0540
481203085	FMUM3KVMU14H	3675 06 13	PA53530-0550
481203085	FMUM3KVMU14M	3675 08 10	PA53530-0550
481203086	FMUM3LVMS08	3675 08 13	PA53530-0560
481203086	FMUM3MVMS08	3675 08 17	PA53530-0560

481203087	FMUM3MVMU12H	3675 10 13	PA53530-0600
481203087	FMUM3MVMU14H	3675 10 17	PA53530-0600
481203088	FMUM3NVMU12H	3675 10 21	PA53530-0700
481203088	FMUS1EBMM10L	3675 12 13	PA53530-0700
481203089	FMUS2EBMG02L	3675 12 17	PA53530-0750
481203089	FMUS3EBMG02L	3675 12 21	PA53530-0750
481203090	FMUS4FFAG02L	3675 14 17	PA53530-0800
481203090	FMUS6HBMG02L	3675 14 21	PA53530-0800
481203091	FMUT1FVMU12H	3675 60 18	PA53530-0850
481203091	FMUT1FVRU12M	3675 60 22	PA53530-0850
481203105	FMUT1GVMU14M	3681 04 19	PA53530-0860
481203105	FMUT1HVMU12H	3681FIL	PA53530-0860
481203106	FMUT1KVAU12M	3681FIL	PA53530-0900
481203106	FMUT1KVMS08	3687FIL	PA53530-0900
481203108	FMUT1KVMU12H	3687FIL	PA53530-1000
481203108	FMUT1KVMU14H	36882-10-10C-SM	PA53530-1000
481203122	FMUT1KVMU14M	36882-8-6-SM	PA53530-1100
481203122	FMUT1KVRU14M	36882-8-8B-SM	PA53530-1100
481203128	FMUT1LVMS08	36882-8-8C-SM	PA53530-1200
481203128	FMUT1MVMS08	36882-8-8-SM	PA53530-1200
481203137	FMUT1MVMU14H	3693 04 10	PA53530-1300
481203137	FMUT1MVMU14M	3693 04 19	PA53530-1300
481203154	FMUT1NVMU12H	3693 06 10	PA53530-1400
481203154	FMUT1NVMU14H	3693 06 13	PA53530-1400
481203171	FMUU2VBMM10L	3693 08 10	PA53530-1500
481203171	FMUV2VBMM10L	3693 08 13	PA53530-1500
481203175	FMUX1KVMU14M	3693 10 13	PA53530-1600
481203175	FNMB6	3693 12 17	PA53530-1600
481203176	FNMB8	3693 14 21	PA53530-1700
481203176	FNPB4	3698 04 10	PA53530-1700
481203180	FNPB6	3698 04 19	PA53530-1800
481203180	FNPB8	3698 06 10	PA53530-1800
481203181	FNPK10	3698 06 13	PA53530-1900
481203181	FNPK12	3698 08 10	PA53530-1900
481203182	FNPK14	3698 08 13	PA53536-0250/0135EN
481203182	FNPK4	3698 10 13	PA53536-0250/0135EN
481203193	FNPK6	3698 10 17	PA53536-0290/0125EN1
481203193	FNPK8	3698 12 17	PA53536-0290/0125EN1
481203194	FNRAB10	3698 14 21	PA53540-0025
481203194	FNRAB6	3699 00 00 14	PA53540-0025
481203208	FNRAB8	3699 04 10	PA53540-0050
481203208	FNRAC10	3699 04 13	PA53540-0050
481203215	FNRAC12	3699 04 19	PA53540-0060
481203215	FNRAC16	3699 04 52	PA53540-0060
481203216	FNRAC6	3699 04 56	PA53540-0080
481203216	FNRAC8	3699 06 10	PA53540-0080
481203218	FNZ 10-SS	3699 06 13	PA53540-0100
481203218	FNZ 12-SS	3699 06 60	PA53540-0100
481203219	FNZ 16-SS	3699 08 10	PA53540-0125
481203219	FNZ 20-SS	3699 08 13	PA53540-0125
481203229	FNZ 25-SS	3699 08 17	PA53540-0130
481203229	FNZ 3-SS	3699 08 65 52	PA53540-0130
481203241	FNZ 4-SS	3699 10 13	PA53540-0160

481203241	FNZ 6-SS	3699 10 17	PA53540-0160
481203242	FNZ 8-SS	3699 12 13	PA53540-0160ATEX
481203242	FOOTSWITCHSAFETYKIT	3699 12 17	PA53540-0160ATEX
481203244	FORM06L71	3699 12 21	PA53540-0200
481203244	FORM06LCF	3699 14 17	PA53540-0200
481203246	FORM06LNBR71	3699 14 21	PA53540-0250
481203246	FORM06LVITCF	36C82-10-6B	PA53540-0250
481203249	FORM06S71	36C82-10-6BK	PA53540-0320
481203249	FORM06SCF	36C82-121-4BK	PA53540-0320
481203250	FORM06SNBR71	36C82-15-8BK	PA53540-0320ATEX
481203250	FORM06SVITCF	36C82-6-4BK	PA53540-0320ATEX
481203257	FORM08L71	36P1-108042011	PA53540-0400
481203257	FORM08LCF	36P1-108052011	PA53540-0400
481203258	FORM08LNBR71	36P1-109052011	PA53540-0450
481203258	FORM08LVITCF	36P2-108052021	PA53540-0450
481203262	FORM08S71	3700-32-00100-0000-000000	PA53540-0500
481203262	FORM08SCF	3700-32-00100-0000-000000	PA53540-0500
481203264	FORM08SNBR71	3700-32-00135-0000-000000	PA53540-0600
481203264	FORM08SVITCF	3700-32-00135-0000-000000	PA53540-0600
481203268	FORM10L71	3700-32-00160-0000-000000	PA53540-0700
481203268	FORM10LCF	3700-32-00160-0000-000000	PA53540-0700
481203271	FORM10LNBR71	3700-32-00210-0000-000000	PA53540-0800
481203271	FORM10LVITCF	3700-32-00210-0000-000000	PA53540-0800
481203293	FORM10S71	3700-32-00260-0000-000000	PA53540-0900
481203293	FORM10SCF	3700-32-00260-0000-000000	PA53540-0900
481203294	FORM10SNBR71	3700-32-00400-0000-000000	PA53540-1000
481203294	FORM10SVITCF	3700-32-00400-0000-000000	PA53540-1000
481203319	FORM12L71	3700-32-00550-0000-000000	PA53540-1100
481203319	FORM12LCF	3700-32-00550-0000-000000	PA53540-1100
481203324	FORM12LNBR71	3700-32-00580-0000-000000	PA53540-1200
481203324	FORM12LVITCF	3700-32-00580-0000-000000	PA53540-1200
481203343	FORM12S71	3700-32-00600-0000-000000	PA53540-1300
481203343	FORM12SCF	3700-32-00600-0000-000000	PA53540-1300
481203348	FORM12SNBR71	3700-32-00660-0000-000000	PA53540-1400
481203348	FORM12SVITCF	3700-32-00660-0000-000000	PA53540-1400
481203355	FORM14S71	3700-32-00750-0000-000000	PA53540-1500
481203355	FORM14SCF	3700-32-00750-0000-000000	PA53540-1500
481203361	FORM14SNBR71	3700-32-01000-3000-000000	PA53540-1600
481203361	FORM15L71	3700-32-01000-3000-000000	PA53540-1600
481203381	FORM15LCF	3700-32-01100-0000-000000	PA53540-1700
481203381	FORM15LNBR71	3700-32-01100-0000-000000	PA53540-1700
481203392	FORM15LVITCF	3700-32-01500-0000-000000	PA53540-1800
481203392	FORM16S71	3700-32-01500-0000-000000	PA53540-1800
481204016	FORM16SCF	3700-32-01800-0000-000000	PA53540-1900
481204016	FORM16SNBR71	3700-32-01800-0000-000000	PA53540-1900
481204025	FORM16SVITCF	3716FIL	PA53540-2000
481204025	FORM18L71	3716FIL	PA53540-2000
481204040	FORM18LCF	371LT-10	PA53540-2200
481204040	FORM18LNBR71	371LT-12	PA53540-2200
481204041	FORM18LVITCF	371LT-16	PA53540-2300
481204041	FORM20S71	371LT-6	PA53540-2300
481204043	FORM20SCF	371LT-8	PA53546-0160/0225EN
481204043	FORM20SNBR71	372-10	PA53546-0160/0225EN

481204044	FORM20SVITCF	372-12	PA53546-0170/0125EN
481204044	FORM22L71	372-16	PA53546-0170/0125EN
481204045	FORM22LCF	372-6	PA53546-0180/0125EN1
481204045	FORM22LNBR71	372-8	PA53546-0180/0125EN1
00507010704	FORM22LVITCF	372RH-10	PA53546-0200/0125EN
00507012104	FORM25S71	372RH-12	PA53546-0200/0125EN
00507012604	FORM25SCF	372RH-16	PA53546-0200/0145EN
00509021616	FORM25SNBR71	372RH-6	PA53546-0200/0145EN
00509021916	FORM25SVITCF	372RH-8	PA53546-0240/0125EN
00509027290	FORM28L71	372TC-10	PA53546-0240/0125EN
00509034516	FORM28LCF	372TC-12	PA53546-0240/0125EN/ATEX
00509034616	FORM28LNBR71	372TC-16	PA53546-0240/0125EN/ATEX
00509035016	FORM28LVITCF	372TC-6	PA53546-0240/0165EN
00509035116	FORM30S71	372TC-8	PA53546-0240/0165EN
00509041890	FORM30SCF	3740-32-00250-3000-000000	PA53546-0400/0280EN
517006098	FORM30SNBR71	3740-32-00250-3000-000000	PA53546-0400/0280EN
517007678	FORM30SVITCF	3740-32-01500-0000-000000	PA58150-0005
521811000	FORM35L71	3740-32-01500-0000-000000	PA58150-0005
521811000	FORM35LCF	3745FIL	PA58150-0005
523831000	FORM35LNBR71	3745FIL	PA58150-0005
523831000	FORM35LVITCF	3746FIL	PA58150-0010
0532002012	FORM38S71	3746FIL	PA58150-0010
0532002015	FORM38SCF	3747FIL	PA58150-0010
0532004109	FORM38SNBR71	3747FIL	PA58150-0010
0532004113	FORM38SVITCF	3751FIL	PA58150-0015
0605878406	FORM42L71	3751FIL	PA58150-0015
0605878406	FORM42LCF	3752FIL	PA58150-0015
0661150010	FORM42LNBR71	3752FIL	PA58150-0015
0661150026	FORM42LVITCF	378285-1	PA58150-0020
0661150033	FP-20PRO	3783-16-00200-0001-000000	PA58150-0020
0663210122	FP-20PRO	3783-16-00200-0001-000000	PA58150-0020
0663909901	FP-30PRN	3783-16-00500-0001-000000	PA58150-0020
676104625	FP-30PRN	3783-16-00500-0001-000000	PA58150-0025
676104825	FP-3PRO	378430-10	PA58150-0025
841000890	FP-3PRO	378430-12	PA58150-0025
905075030	FPB10-3/8	378430-6	PA58150-0025
911040004	FPB6-1/4	378430-8	PA58150-0025TIMMER
911042087	FPB6-1/8	378431-11	PA58150-0025TIMMER
911042090	FPS-0300-0171	378431-4	PA58150-0030
911042096	FPS-0300-0171	3784-32-00950-0001-000000	PA58150-0030
911043017	FR-20PRO	3784-32-00950-0001-000000	PA58150-0030
911043051	FR-20PRO	378435-7	PA58150-0030
911045021	FR3.V2	378447-6	PA58150-0040
911045028	FR-3PRNA	378447-7	PA58150-0040
911045030	FR-3PRNA	378447-8	PA58150-0050
911045041	FR4508Q5029	378452-7	PA58150-0050
911045045	FR6.V2	3792FIL	PA58150-0050
911045051	FRCALAN-A402179G01	3792FIL	PA58150-0050
911045052	FRENOMBA105	379323-1	PA58150-0055
911045053	FRENOMBA145	379325-1	PA58150-0055
911045071	FRENOMBB145	379433-18	PA58150-0060
911045078	FRENOSBA105	379453-10	PA58150-0060
911045087	FRENOSBA145	379523-1	PA58150-0075

911073021	FRENOSBA205	379531-1	PA58150-0075
916040201	FRENOSBA70	3795742H01	PA58150-0080
916040202	FRENOSMBA100	379604-1	PA58150-0080
916041009	FRENOSMBA142	379604-2	PA58150-0100
916041021	FRENOSMBA82	379676-15	PA58150-0100
916041022	FRIA10-3P	379686-1	PA58150-0230
916041023	FRIA15-4P	379686-2	PA58150-0230
916043132	FRIA30-6P	379740-6	PA58160-0005
916043142	FRP-15-487-000	379747X	PA58160-0005
916044002	FRP-15-487-000	379828X	PA58160-0005
916044003	FRP-30-366-000	37C82-10-6B	PA58160-0005
916045019	FRP-30-366-000	37C82-10-6BK	PA58160-0010
916045027	FRP-95-014	37C82-121-4BK	PA58160-0010
916045044	FRP-95-014	37C82-15-8B	PA58160-0015
916045047	FRP-95-015	37C82-15-8BK	PA58160-0015
916045057	FRP-95-015	37C82-6-4BK	PA58160-0025
916045064	FRP-95-017	37KAAN17MPN	PA58160-0025
916045066	FRP-95-017	37KAAN17MPX	PA58190-0005
916045067	FRP-95-062	37KAAN21MPN	PA58190-0005
916045077	FRP-95-062	37KAAN21MPX	PA58190-0010
916045078	FRP-95-068	37KAAN26MPN	PA58190-0010
916045088	FRP-95-068	37KAAN26MPX	PA58190-0015
916045093	FRP-95-115	37KAAW17MPN	PA58190-0015
916045095	FRP-95-115	37KAAW17MPX	PA58190-0020
916070008	FRP-95-160	37KAAW21MPN	PA58190-0020
916070009	FRP-95-160	37KAAW21MPX	PA58190-0025
916071001	FRP-95-169	37KAAW21MPXS	PA58190-0025
916073003	FRP-95-169	37KAAW26MPN	PA58190-0025
916073004	FRP-95-170	37KAAW26MPX	PA58190-0025
916073010	FRP-95-170	37KAAW26MPXS	PA58190-0030
916073029	FRP-95-172	37KAIN13MPN	PA58190-0030
916073030	FRP-95-172	37KAIN13MPX	PA58190-0040
916073031	FRP-95-178	37KAIN17MPN	PA58190-0040
916073033	FRP-95-178	37KAIN17MPX	PA58190-0050
918040068	FRP-95-199	37KAIN21MPN	PA58190-0050
918041005	FRP-95-199	37KAIN21MPX	PA58190-0060
918041037	FRP-95-209	37KAIN26MPN	PA58190-0060
918041039	FRP-95-209	37KAIN26MPX	PA58190-0080
918042049	FRP-95-212	37KAIW17MPN	PA58190-0080
918042050	FRP-95-212	37KAIW17MPX	PA58190-0100
918042066	FRP-95-213	37KAIW17MPXS	PA58190-0100
918042078	FRP-95-213	37KAIW21MPN	PA58190-0150
918043055	FRP-95-235	37KAIW21MPX	PA58190-0150
918044011	FRP-95-235	37KAIW21MPXS	PA58220-0025
918045022	FRP-95-236	37KAIW26MEX	PA58220-0025
918045023	FRP-95-236	37KAIW26MPXS	PA58220-0030
918045024	FRP-95-271	37KATF10MPN	PA58220-0030
918045026	FRP-95-271	37KATF10MPX	PA58220-0040
918045032	FRP-95-296	37KATF13MPN	PA58220-0040
918045034	FRP-95-296	37KATF13MPX	PA58220-0050
918045035	FRP-95-505	37KATF16MPN	PA58220-0050
918045037	FRP-95-505	37KATF16MPX	PA58220-0080
918045038	FRP-95-506	37KATF19MPN	PA58220-0080

918045040	FRP-95-506	37KATF19MPX	PA58220-0100
918045044	FRP-95-507	37KATF19MVX	PA58220-0100
918045048	FRP-95-507	37KFAW21MPX	PA58220-0125
918045049	FRP-95-508	37-P-19	PA58220-0125
918045059	FRP-95-508	37-P-24	PA58220-0150
918045062	FRP-95-566	37-P-39	PA58220-0150
918045076	FRP-95-566	37-P-62	PA58220-0160
918060016	FRP-95-593	37SFAK17SXG	PA58220-0160
930000044	FRP-95-593	37SFAK21SXG	PA58220-0200
930000072	FRP-95-610	37SFAK21SXN	PA58220-0200
930000129	FRP-95-610	37SFAK21SXNS	PA58220-0230
930000131	FRP-95-722	37SFAK26SXG	PA58220-0230
930000132	FRP-95-722	37SFAK26SXN	PA58220-0250
930000133	FRP-95-775	37SFAK26SXNS	PA58220-0250
0962110025	FRP-95-775	37SFAN13SXN	PA58220-0320
0962110050	FRP-95-831	37SFAN17MXX	PA58220-0320
0962120050	FRP-95-831	37SFAN17SXN	PA58220-0600
990202007	FRP-95-832	37SFAN21SXN	PA58220-0600
990203007	FRP-95-832	37SFAN26SXN	PA58220-0700
1010010037	FRP-95-847	37SFAW21SXN	PA58220-0700
1010010060	FRP-95-847	37SFIN17SXN	PA58220-0800
1010010091	FRP-95-950	37SFIN21SXN	PA58220-0800
1010010093	FRP-95-950	37SFIN26SXN	PA58230-0020
1010010097	FRP-96-283	37SFIW17SXG	PA58230-0020
1010010104	FRP-96-283	37SFIW21SXG	PA58230-0025
1010809396	FRP-96-294	37SFIW21SXN	PA58230-0025
1011040041	FRP-96-294	37SFIW21SXNS_01	PA58230-0030
1011040046	FRP-96-296	37SFIW26SXG	PA58230-0030
1011060001	FRP-96-296	37SFIW26SXN	PA58230-0040
1011060005	FRP-96-301	37SFIW26SXNS	PA58230-0040
1011060018	FRP-96-301	37SFTF10SXG	PA58250-0025
1011100036	FRP-96-315	37SFTF10SXN	PA58250-0025
1011150008	FRP-96-315	37SFTF10SXNS	PA58250-0050
1011430010	FRP-96-641	37SFTF13SXG	PA58250-0050
1011600918	FRP-96-641	37SFTF13SXN	PA58250-0050
1011600982	FRP-96-653	37SFTF13SXNS	PA58250-0050
1011601982	FRP-96-653	37SFTF16SXN	PA58250-0100
1012010018	FRP-96-729	37SFTF16SXNS	PA58250-0100
1014001007	FRP-96-729	37SFTF19SXG	PA58250-0125
1014006039	FRP-96-806	37SFTF19SXN	PA58250-0125
1014010036	FRP-96-806	37SFTF19SXNS	PA58250-0140
1014010040	FRP-96-943	37SFTP13SXNS	PA58250-0140
1014010099	FRP-96-943	37SRTF19MXX	PA58250-0200
1014010116	FRP-96-944	3800 04 00	PA58250-0200
1014020000	FRP-96-944	3800 06 00	PA58250-1100
1014020003	FS.646 322 212	3800 08 00	PA58250-1100
1014020004	FS1200S	3800 10 00	PA58270-0015
1014020032	FS12LCF	3800 12 00	PA58270-0015
1014020065	FS1600S	3800 70 00	PA58270-0025
1014020068	FS160POLY	380011-12	PA58270-0025
1015000000	FS200SV	380011-24	PA58290-0040
1015010002	FS20860	380057-1	PA58290-0040
1015010004	FS400S	3800-PSN	PA58290-0080

1015010005	FS400S4	3800-PSN	PA58290-0080
1015120000	FS400S4F	3800-PSV	PA58550-0010
1016010000	FS400SV	3800-PSV	PA58550-0010
1016010001	FS600S	3801 04 10	PA59060-0005
1016010002	FS600SFV	3801 04 19	PA59060-0005
1018000000	FS643222112	3801 06 10	PA59060-0010
1018000001	FS643222122	3801 06 13	PA59060-0010
1018000002	FS643222212	3801 06 19	PA59060-0012
1018000003	FS643223132	3801 08 10	PA59060-0012
1018000004	FS643232112	3801 08 13	PA59060-0015
1018000006	FS643232122	3801 08 17	PA59060-0015
1018000007	FS643322112	3801 10 13	PA59060-0020
1018000008	FS643322122	3801 10 17	PA59060-0020
1018000010	FS643322212	3801 12 13	PA59060-0025
1018000018	FS643322222	3801 12 17	PA59060-0025
1018000021	FS643332112	3802 04 00	PA59060-0025
1018000022	FS643332212	3802 06 00	PA59060-0025
1018000023	FS67A222112	3802 08 00	PA59060-0030
1018000024	FS67B222112	3802 10 00	PA59060-0030
1018000025	FS67B222212	3802 12 00	PA59060-0040
1018000026	FS67B322112	3802 55 00	PA59060-0040
1018000027	FS67B322212	3802 56 00	PA59060-0050
1018000029	FS800S	3802 60 00	PA59060-0050
1018000031	FS-F-10	3802 62 00	PA59060-0050
1018000032	FS-F-11	3803 04 10	PA59060-0050
1018000036	FS-F-12	3803 06 10	PA59060-0080
1018000044	FS-F-14	3803 06 11	PA59060-0080
1018006017	FS-F-16	3803 06 13	PA59060-0110
1018006023	FS-F-18	3803 06 14	PA59060-0110
1018010032	FS-F-20	3803 08 10	PA59070-0005
1018020011	FS-F-22	3803 08 11	PA59070-0005
1050910002	FS-F-24	3803 08 13	PA59070-0010
1050910003	FS-F-28	3803 08 14	PA59070-0010
1050910004	FS-F-32	3803 08 17	PA59070-0025
1051300104	FS-F-38	3803 10 13	PA59070-0025
1061600233	FS-F-40	3803 10 14	PA59100-0005
1061600278	FS-F-48	3803 10 17	PA59100-0005
1081200025	FS-F-60	3804 04 00	PA59100-0010
1081200026	FSV-G2	3804 06 00	PA59100-0010
1091300015	FSV-G2	3804 08 00	PA59100-0015
1091300016	FTA1A10QN25G8X	3804 10 00	PA59100-0015
1091300017	FTA1A10QP25G8A	3804 12 00	PA59100-0020
1091300065	FTA1A10QP25G8C	3804 55 00	PA59100-0020
1091300071	FTA1A10QP25G8D	3804 56 00	PA59100-0025
1111701045	FTA1A10QP25G8X	3804 60 00	PA59100-0025
1111703281	FTA1A10QV25G8C	3804 62 00	PA59100-0030
1151826300	FTA1A10QV25G8X	3805 04 10	PA59100-0030
1160800003	FTA2A10QP25G8D	3805 04 11	PA59100-0040
1161300002	FTA2A10QP25G8X	3805 04 13	PA59100-0040
1161300003	FTA2A20QP25G8X	3805 06 10	PA59100-0050
1161300004	FTAE1A05Q	3805 06 11	PA59100-0050
1161300011	FTAE1A10Q	3805 06 13	PA59100-0080
1161300016	FTAE1A20Q	3805 06 14	PA59100-0080

1161300021	FTAE1B05Q	3805 08 10	PA59100-0080
1161300023	FTAE1B10Q	3805 08 11	PA59100-0080
1161300026	FTAE1B20Q	3805 08 13	PA59100-0140
1161300029	FTAE2A05Q	3805 08 14	PA59100-0140
1161300036	FTAE2A10Q	3805 08 17	PA59140-0025
1161300043	FTAE2A20Q	3805 10 13	PA59140-0025
1161300046	FTAE2B10Q	3805 10 14	PA59140-0035
1161300050	FTAE2B20Q	3805 10 17	PA59140-0035
1161600016	FTB1A05QP25G16X	3805 10 18	PA59140-0040
1161600101	FTB1A10QP25G16X	3805 12 13	PA59140-0040
1161700004	FTB1A10QV25G16D	3805 12 14	PA59140-0050
1181281131	FTB1A10QV25G16X	3805 12 17	PA59140-0050
1181282131	FTB1A20QV25G16X	3805 12 18	PA59140-0080
1181306113	FTB2A05QP25G16X	3805 12 21	PA59140-0080
1181310110	FTB2A10QE25G16C	3805 12 22	PA59140-0100
1181709006	FTB2A10QE25G16X	3805 55 11	PA59140-0100
1181709036	FTB2A10QP25G16X	3805 55 14	PA59140-0100
1181709609	FTB2A10QV25G16X	3805 56 11	PA59140-0100
1615859600	FTBE1A02Q	3805 56 14	PA59140-0125
1615859600	FTBE1A05Q	3805 60 14	PA59140-0125
2000009904	FTBE1A10Q	3805 60 18	PA59140-0160
2000010701	FTBE1A20Q	3805 62 14	PA59140-0160
2000010702	FTBE1B05Q	3805 62 18	PA59140-0175
2000025805	FTBE1B10Q	3805 62 22	PA59140-0175
2000091206	FTBE1B20Q	3806 04 00	PA59140-0200
2000091604	FTBE2A02Q	3806 06 00	PA59140-0200
2000100701	FTBE2A05Q	3806 08 00	PA59140-0210
2000104101	FTBE2A10Q	3806 10 00	PA59140-0210
2000104201	FTBE2A20Q	3806 12 00	PA59140-0250
2000104301	FTBE2B05Q	3806 55 00	PA59140-0250
2000105105	FTBE2B10Q	3806 56 00	PA59140-0270
2000132802	FTBE2B20Q	3806 60 00	PA59140-0270
2000335502	FTC1A10QP25G24X	3806 62 00	PA59140-0275
2000335702	FTC1A10QV25G24X	3808 04 10	PA59140-0275
2000337301	FTC1A20QP25G24X	3808 04 11	PA59140-0320
2000341803	FTC1A20QV25G24X	3808 04 13	PA59140-0320
2000342005	FTC2A05QP25G24X	3808 06 10	PA59140-0800
2000343401	FTC2A10QP25G24X	3808 06 11	PA59140-0800
2000375801	FTC2A10QP50G24X	3808 06 13	PA59140-1000
2000511701	FTC2A10QV25G24X	3808 06 14	PA59140-1000
2000511801	FTC2A20QV25G24X	3808 08 10	PA59150-0005
2000529904	FTCE1A05Q	3808 08 11	PA59150-0005
2000558402	FTCE1A10Q	3808 08 13	PA59150-0015
2000558403	FTCE1A20Q	3808 08 14	PA59150-0015
2000573201	FTCE1B05Q	3808 08 17	PA59150-0025
2000575501	FTCE1B10Q	3808 10 13	PA59150-0025
2000576004	FTCE1B20Q	3808 10 14	PA59150-0055
2000603701	FTCE2A02Q	3808 10 17	PA59150-0055
2000681801	FTCE2A05Q	3809 04 10	PA59170-0025
2000681803	FTCE2A10Q	3809 04 11	PA59170-0025
2000705802	FTCE2A20Q	3809 04 13	PA59170-0035
2000705804	FTCE2B05Q	3809 06 10	PA59170-0035
2000722301	FTCE2B10Q	3809 06 11	PA59170-0050

2000722401	FTCE2B20Q	3809 06 13	PA59170-0050
2000726401	FTF-120-G4	3809 06 14	PA59170-0050
2000736502	FTF-120-G4	3809 08 10	PA59170-0050
2000782801	FTF-120-G4-BODY	3809 08 11	PA59170-0060
2000809802	FTF-120-G4-BODY	3809 08 13	PA59170-0060
2001025702	FTF-15-G1	3809 08 14	PA59170-0100
2001025704	FTF-15-G1	3809 08 17	PA59170-0100
2001098201	FTF16RCFX	3809 10 13	PA59170-0125
2001145501	FTF-20B-G1	3809 10 14	PA59170-0125
2001145502	FTF-20B-G1	3809 10 17	PA59170-0140
2001161201	FTF-20B-G2	3809 10 18	PA59170-0140
2001172701	FTF-20B-G2	3810 EP	PA59170-0200
2001195701	FTF-20-G1	3810 EP	PA59170-0200
2001195704	FTF-20-G1	3810 H	PA59170-0320
2001195804	FTF20RCFX	3810 H	PA59170-0320
2001261801	FTF24RCFX	3810 HRF	PA59170-0500
2001261802	FTF32RCFX	3810 HV	PA59170-0500
2001262404	FTF32RSSX	3810 HV	PA59170-0900
2001311701	FTF40RCFX	3810 RV	PA59170-0900
2001311704	FTF48RCFX	3810 RVUV	PA60130-0010
2001328004	FTF-50-G1	3810 RVUV	PA60130-0010
2001329901	FTF-50-G1	3810 UV	PA60130-0015
2001334601	FTF-50-G2	3810 UV	PA60130-0015
2001354401	FTF-50-G2	3810 V	PA60130-0025
2001354501	FTF-5A-G1	3810 V	PA60130-0025
2001354502	FTF-5A-G1	3810 VUV	PA60130-0033
2001442201	FTF-5A-M5	3810 VUV	PA60130-0033
2001457604	FTF-5A-M5	3811 RFV	PA60130-0040
2001457704	FTF-60-G2	3811 RV	PA60130-0040
2001468201	FTF-60-G2	3811 RV	PA60130-0050
2001472201	FTF-60-G2-BODY	3811 V	PA60130-0050
2001476001	FTF-60-G2-BODY	3811 V	PA60130-0080
2001550401	FTK-15	3811FIL	PA60130-0080
2001567104	FTK-15	3811FIL	PA60130-0100
2001638101	FTK-20B	3812FIL	PA60130-0100
2007009806	FTK-20B	3812FIL	PA60140-0010
2007023601	FTK-2A	3815FIL	PA60140-0010
2007025004	FTK-2A	3815FIL	PA60140-0010
2007046501	FTK-50	3816 04 00	PA60140-0010
2007131401	FTK-50	3816 06 00	PA60140-0025
2007131402	FTK-5A	3816 08 00	PA60140-0025
2007134502	FTK-5A	3816 10 00	PA60150-0010
2007134503	FTK-60-G1	3816 12 00	PA60150-0010
2007157701	FTK-60-G1	3816 55 00	PA60150-0015
2007169101	FTL4	3816 56 00	PA60150-0015
2007178701	FTL6	3816 60 00	PA60150-0015ATEX
2007180001	FTL8	3816 62 00	PA60150-0015ATEX
2007180101	FTL8-4	3816FIL	PA60150-0020
2007180201	FTL8-6	3816FIL	PA60150-0020
2007181501	FTM-15-G1	3816-QC	PA60150-0025
2007220701	FTM-15-G1	3820 RFUV	PA60150-0025
2007234101	FTM-15-M5	3820 RFUV	PA60150-0025
2007234103	FTM-15-M5	3820 RUV	PA60150-0025

2007234104	FTM-20B-G1	3820 RUV	PA60150-0030
2007238002	FTM-20B-G1	3820 RV	PA60150-0030
2007263701	FTM-20B-G2	3820 UV	PA60150-0040
2007263702	FTM-20B-G2	3820 UV	PA60150-0040
2007268701	FTM-20B-M6	3820 V	PA60150-0050
2007271701	FTM-20B-M6	3820 V	PA60150-0050
2007271702	FTM-20-G1	3820-32-00800-0000-000000	PA60150-0050ATEX
2007271904	FTM-20-G1	3820-32-00800-0000-000000	PA60150-0050ATEX
2007271905	FTM-20-M5	3821 04 10	PA60150-0060
2007272003	FTM-20-M5	3821 04 11	PA60150-0060
2007272103	FTM-2A-M5	3821 04 13	PA60150-0080
2007272104	FTM-2A-M5	3821 06 10	PA60150-0080
2007272201	FTM-50-G1	3821 06 11	PA60150-0100
2007272302	FTM-50-G1	3821 06 13	PA60150-0100
2007272402	FTM-50-G2	3821 06 14	PA60150-0120
2007272501	FTM-50-G2	3821 08 10	PA60150-0120
2007272601	FTM-50-M6	3821 08 13	PA60150-0150
2007272602	FTM-50-M6	3821 08 14	PA60150-0150
2007272801	FTM-50-M8	3821 08 17	PA60210-0025
2007272802	FTM-50-M8	3821 10 13	PA60210-0025
2007272901	FTM-5A-G1	3821 10 14	PA60210-0050
2007273001	FTM-5A-G1	3821 10 17	PA60210-0050
2007273101	FTM-5A-M5	3821 10 18	PA60210-0050
2007273201	FTM-5A-M5	3821 12 13	PA60210-0050
2007273401	FTM-60-G2	3821 12 14	PA60210-0075
2007273501	FTM-60-G2	3821 12 17	PA60210-0075
2007273502	FTM-60-G2-BODY	3821 12 18	PA60210-0080
2007273601	FTM-60-G2-BODY	3821 12 21	PA60210-0080
2007273602	FTM-60-M10	3821 12 22	PA60210-0090
2007273702	FTM-60-M10	3821 55 11	PA60210-0090
2007273801	FTS-0001	3821 56 11	PA60210-0100
2007273802	FTS-0002	3821 56 14	PA60210-0100
2007273901	FTS-0003	3821 60 14	PA60210-0125
2007274001	FTS-0004	3821 60 18	PA60210-0125
2007274101	FTS-0005	3821 62 18	PA60210-0160
2007274201	FTS-0006	3821 62 22	PA60210-0160
2007274401	FTS-0007	3821 RFV	PA60210-0200
2007274501	FTS-0008	3821 RFV	PA60210-0200
2007274601	FTS-0009	3821 RV	PA60210-0250
2007274602	FTS-0010	3821 RV	PA60210-0250
2007274701	FTS-0011	3821 V	PA60210-0500
2007274801	FTS-0012	3821 V	PA60210-0500
2007275801	FTS-0013	3821-00230	PA60210-0600
2007275904	FTS-0014	3821-00230	PA60210-0600
2007275905	FTS-0027	3821-00460	PA60210-0700
2007276105	FTS-0028	3821-00460	PA60210-0700
2007276106	FTS-0029	3822-00320	PA60210-0800
2007276204	FTY-120-M18-G2	3822-00320	PA60210-0800
2007276205	FTY-120-M18-G2	3822-00450	PA60220-0020
2007276206	FTY-20B-M8-M5	3822-00450	PA60220-0020
2007276301	FTY-20B-M8-M5	3822-00600	PA60220-0025
2007276302	FTY-2A-M5-M3	3822-00600	PA60220-0025
2007276501	FTY-2A-M5-M3	3822-00800	PA60220-0050

2007276502	FTY-50-M8-M5	3822-00800	PA60220-0050
2007276604	FTY-50-M8-M5	3822-01250	PA60220-0080
2007277302	FTY-5A-M5-M5	3822-01250	PA60220-0080
2007277303	FTY-5A-M5-M5	3822-02355	PA60220-0090
2007277501	FTY-60-M14-G1	3822-02355	PA60220-0090
2007277502	FTY-60-M14-G1	3822-02760	PA60240-0025
2007277601	FTYS-120-20-G2	3822-02760	PA60240-0025
2007277702	FTYS-120-20-G2	3822-02900	PA60240-0050
2007277703	FTYS-120-70-G2	3822-02900	PA60240-0050
2007277801	FTYS-120-70-G2	3822-03460	PA60240-0080
2007277802	FTYS-20B-15-M5	3822-03460	PA60240-0080
2007278101	FTYS-20B-15-M5	3823-00320	PA60240-0100
2007278503	FTYS-20B-30-M5	3823-00320	PA60240-0100
2007278602	FTYS-20B-30-M5	3823-00450	PA60240-0125
2007278603	FTYS-20B-6-M5	3823-00450	PA60240-0125
2007278702	FTYS-20B-6-M5	3823-00580	PA60270-0500
2007278703	FTYS-2A-15-M3	3823-00580	PA60270-0500
2007278801	FTYS-2A-15-M3	3823-00600	PA60540-0025
2007279301	FTYS-2A-3-M3	3823-00600	PA60540-0025
2007279504	FTYS-2A-3-M3	3823-00650	PA61080-0005
2007279505	FTYS-50-15-M5	3823-00650	PA61080-0005
2007279604	FTYS-50-15-M5	3823-00800	PA61080-0015
2007279605	FTYS-50-30-M5	3823-00800	PA61080-0015
2007279705	FTYS-50-30-M5	3823-01000	PA61080-0025
2007279706	FTYS-50-6-M5	3823-01000	PA61080-0025
2007279801	FTYS-50-6-M5	3823-01100	PA61080-0050
2007279802	FTYS-5A-10-M5	3823-01100	PA61080-0050
2007279901	FTYS-5A-10-M5	3823-01250	PA61080-0080
2007280101	FTYS-5A-15-M5	3823-01250	PA61080-0080
2007280201	FTYS-5A-15-M5	3823-02050	PA61080-0100
2007280301	FTYS-5A-3-M5	3823-02050	PA61080-0100
2007280401	FTYS-5A-3-M5	3823-02500	PA61080-0110
2007280402	FTYS-60-30-G1	3823-02500	PA61080-0110
2007280501	FTYS-60-30-G1	3823-02760	PA61080-0140
2007280502	FTYS-60-50-G1	3823-02760	PA61080-0140
2007280601	FTYS-60-50-G1	3823-02900	PA61090-0010
2007280602	FTYS-60-70-G1	3823-02900	PA61090-0010
2007280701	FTYS-60-70-G1	3823-02980	PA61090-0010ATEX
2007280702	FU-HMX	3823-02980	PA61090-0010ATEX
2007280901	FUS310/14CFX	3823-03460	PA61090-0025
2007281001	FUS310CFX	3823-03460	PA61090-0025
2007281301	FUS310SS	3826 04 00	PA61090-0025ATEX
2007281401	FUS312.4404X	3826 06 00	PA61090-0025ATEX
2007281901	FUS312CFX	3826 08 00	PA61100-0005
2007281902	FUS312M16.4404X	3826 10 00	PA61100-0005
2007282101	FUS312SS	3826 12 00	PA61100-0010
2007282102	FUS314CFX	38282-10-10	PA61100-0010
2007282401	FUS316CFX	38282-10-10B	PA61100-0012
2007282402	FUS316SS	38282-12-12	PA61100-0012
2007282502	FUS320CFX	38282-12-12B	PA61100-0015
2007282503	FUS32CFX	38282-4-4B	PA61100-0015
2007282602	FUS33.4404X	38282-6-6B	PA61100-0020
2007282603	FUS33/M10.4404X	38282-8-8	PA61100-0020

2007282701	FUS33CFX	38282-8-8B	PA61100-0025
2007283002	FUS34.4404X	3831 04 10	PA61100-0025
2007283003	FUS34/31B/4404X	3831 04 13	PA61100-0025
2007283004	FUS34/M10.4404X	3831 04 19	PA61100-0025
2007283102	FUS34CFX	3831 06 10	PA61100-0025ATEX
2007283103	FUS34SS	3831 06 13	PA61100-0025ATEX
2007283201	FUS35/10.4404X	3831 08 10	PA61100-0030
2007283501	FUS35/10/31B/4404X	3831 08 13	PA61100-0030
2007283601	FUS35/10CFX	3831 08 17	PA61100-0035
2007283701	FUS35/10SS	3831 10 13	PA61100-0035
2007283801	FUS35/12CFX	3831 10 17	PA61100-0040
2007283802	FUS35/M10.4404X	3831 12 13	PA61100-0040
2007283902	FUS35CFX	3831 12 17	PA61100-0050
2007284101	FUS36.4404X	3831 12 21	PA61100-0050
2007284301	FUS36/14CFX	3831FIL	PA61100-0060
2007284401	FUS36/31B/4404X	3831FIL	PA61100-0060
2007284601	FUS36/M12.4404X	3832FIL	PA61100-0065
2007284602	FUS36CFX	3832FIL	PA61100-0065
2007284701	FUS36M12/31B/4404X	3836FIL	PA61100-0080
2007284702	FUS36SS	3836FIL	PA61100-0080
2007284801	FUS38/12.4404X	3837-00250	PA61100-0100
2007284802	FUS38/12CFX	3837-00250	PA61100-0100
2007284803	FUS38/12SS	3837-01450	PA61150-0025
2007284901	FUS38/M12.4404X	3837-01450	PA61150-0025
2007285001	FUS38/M12/3.1B/4404X	3837-01800	PA61150-0035
2007285101	FUS38CFX	3837-01800	PA61150-0035
2007286002	FUS38SS	3838-00550	PA61150-0050
2007286102	FUS610CFX	3838-00550	PA61150-0050
2007286201	FUS612CFX	3838-01750	PA61150-0080
2007286202	FUS62CFX	3838-01750	PA61150-0080
2007286301	FUS62SS	3838-01800	PA61150-0100
2007286401	FUS63CFX	3838-01800	PA61150-0100
2007286502	FUS63SS	3838-02300	PA61150-0140
2007287101	FUS64/12CFX	3838-02300	PA61150-0140
2007287301	FUS64CFX	3839-00800	PA61150-0160
2007287401	FUS64SS	3839-00800	PA61150-0160
2007287501	FUS65/12CFX	3839-02300	PA61150-0200
2007287601	FUS65CFX	3839-02300	PA61150-0200
2007287602	FUS65SS	3839-03870	PA61150-0250
2007287901	FUS66CFX	3839-03870	PA61150-0250
2007288001	FUS66SS	383FIL	PA61150-0900
2007294301	FUS68CFX	383FIL	PA61150-0900
2007294602	FUS68SS	3850 00 00 10	PA61160-0010
2007294702	FUSF310/14CF	3850-32-00570-0000-000000	PA61160-0010
2007309801	FUSF310CF	3850-32-00570-0000-000000	PA61160-0025
2007309802	FUSF312CF	3850-32-01100-0000-000000	PA61160-0025
2007326001	FUSF32CF	3850-32-01100-0000-000000	PA61160-0060
2007356601	FUSF33CF	3853FIL	PA61160-0060
2007356602	FUSF34CF	3853FIL	PA61160-0080
2007364103	FUSF35/10CF	3855FIL	PA61160-0080
2007375501	FUSF35/12CF	3855FIL	PA61180-0025
2007396701	FUSF36/14CF	3856FIL	PA61180-0025
2007410101	FUSF36CF	3856FIL	PA61180-0040

2007411202	FUSF38/12CF	3861FIL	PA61180-0040
2007411801	FUSF38CF	3861FIL	PA61180-0050
2007411901	FUSF62CF	3862FIL	PA61180-0050
2007412001	FUSF63CF	3862FIL	PA61480-0025
2007412101	FUSF64CF	3866 04 06	PA61480-0025
2007415801	FUSF65CF	3866 04 08	PA61480-0025ATEX
2007416801	FUSF66CF	3866 06 08	PA61480-0025ATEX
2007416802	FUSF68CF	3866 06 10	PA62090-0005
2007416902	FUSM310CFM	3866 08 10	PA62090-0005
2007417101	FUSM310SSM	3866 08 12	PA62090-0010
2007417201	FUSM312CFM	3866 10 12	PA62090-0010
2007417401	FUSM312SSM	3879 04 10	PA62090-0015
2007417601	FUSM314CFM	3879 04 13	PA62090-0015
2007417801	FUSM316CFM	3879 06 10	PA62090-0020
2007417901	FUSM320CFM	3879 06 13	PA62090-0020
2007418101	FUSM32CFM	3879 08 10	PA62090-0025
2007418201	FUSM33CFM	3879 08 13	PA62090-0025
2007424902	FUSM33SSM	3879 08 17	PA62090-0025ATEX
2007425001	FUSM34CFM	3879 10 13	PA62090-0025ATEX
2007425201	FUSM34SSM	3879 10 17	PA62090-0030
2007425202	FUSM35/10CFM	3879 12 13	PA62090-0030
2007425901	FUSM35/10SSM	3879 12 17	PA62090-0035
2007425902	FUSM35/12CFM	3879 12 21	PA62090-0035
2007426001	FUSM36/14CFM	3889 04 10	PA62090-0040
2007426002	FUSM36CFM	3889 04 11	PA62090-0040
2007449301	FUSM36SSM	3889 04 13	PA62090-0050
2007452402	FUSM38/12CFM	3889 06 10	PA62090-0050
2007484101	FUSM38/12SSM	3889 06 11	PA62090-0060
2007504501	FUSM38CFM	3889 06 13	PA62090-0060
2007534301	FUSM38SSM	3889 06 14	PA62090-0080
2007550001	FUSM610CFM	3889 08 10	PA62090-0080
2007553502	FUSM612CFM	3889 08 11	PA62090-0110
2007553503	FUSM62CFM	3889 08 13	PA62090-0110
2007556802	FUSM62SSM	3889 08 14	PA62090-0150
2007557201	FUSM63CFM	3889 08 17	PA62090-0150
2007564701	FUSM63SSM	3889 10 13	PA62100-0010
2007576801	FUSM64CFM	3889 10 14	PA62100-0010
2007579501	FUSM64SSM	3889 10 17	PA62100-0012
2007598401	FUSM65CFM	3889 10 18	PA62100-0012
2007598601	FUSM65SSM	3889 12 13	PA62100-0025
2007598801	FUSM66CFM	3889 12 14	PA62100-0025
2007598901	FUSM66SSM	3889 12 17	PA62120-0010
2007602102	FUSM68CFM	3889 12 18	PA62120-0010
2007613601	FUSM68SSM	3889 12 21	PA62120-0025
2007613602	FV101S	3889 12 22	PA62120-0025
2007616701	FW 14-1/2-SS	3889 55 11	PA62120-0050
2007634901	FX046642	3889 55 14	PA62120-0050
2007649501	FX046643	3889 56 11	PA63000-0010
2007664301	FY463118	3889 56 14	PA63000-0010
2007664401	FY466795	3889 60 14	PA63000-0015
2007675901	FYK-120-G1	3889 60 18	PA63000-0015
2007676303	FYK-120-G1	3889 62 14	PA63000-0015ATEX
2007718901	FYK-20B	3889 62 18	PA63000-0015ATEX

2007728801	FYK-20B	3889 62 22	PA63000-0020
2007728803	FYK-2A	3893 04 10	PA63000-0020
2007731401	FYK-2A	3893 04 13	PA63000-0025
2007731802	FYK-50	3893 04 19	PA63000-0025
2007758801	FYK-50	3893 06 10	PA63000-0025ATEX
2007783101	FYK-5A	3893 06 13	PA63000-0025ATEX
2007783201	FYK-5A	3893 08 10	PA63000-0030
2007783202	FYK-60-G1	3893 08 13	PA63000-0030
2007785203	FYK-60-G1	3893 08 17	PA63000-0040
2007785902	G00393	3893 10 13	PA63000-0040
2007812802	G00448	3893 10 17	PA63000-0050
2007818001	G00450Q	389-6911	PA63000-0050
2007820701	G00452	389-6911	PA63000-0060
2007821201	G00453	3898 04 10	PA63000-0060
2007836701	G00512	3898 04 13	PA63000-0080
2007836702	G00574	3898 04 19	PA63000-0080
2007844901	G00577	3898 06 10	PA63000-0100
2007845301	G00582	3898 06 13	PA63000-0100
2007845401	G00583	3898 06 19	PA63000-0120
2007845501	G00584	3898 08 10	PA63000-0120
2007851801	G00585	3898 08 13	PA63000-0130
2007859901	G00589	3898 08 17	PA63000-0130
2007860001	G00590	3898 10 13	PA63000-0150
2007860101	G00591	3898 10 17	PA63000-0150
2007863101	G00593	3899 04 10	PA63000-0200
2007872001	G00678	3899 04 13	PA63000-0200
2007888103	G00712	3899 04 19	PA63010-0010
2007888202	G00758	3899 06 10	PA63010-0010
2007889401	G00795	3899 06 13	PA63010-0015
2007891702	G00796	3899 06 19	PA63010-0015
2007891703	G00798	3899 08 10	PA63010-0025
2007892301	G00818	3899 08 13	PA63010-0025
2007894701	G00819	3899 08 17	PA63030-0025
2007901101	G00957	3899 10 13	PA63030-0025
2007901201	G00966	3899 10 17	PA63030-0050
2007901601	G00967	38DX70	PA63030-0050
2007901902	G00968	38DX70	PA64000-0025
2007901903	G00970	38KBAW21MEX	PA64000-0025
2007905602	G00971	38KBAW21MPN	PA67290-0005
2007910701	G00973Q	38KBAW21MPX	PA67290-0005
2007911603	G00974Q	38KBAW26MEX	PA67290-0010
2007918302	G00977	38KBAW26MPN	PA67290-0010
2007918303	G00978	38KBAW26MPX	PA67290-0015
2007918705	G00979	38KBAW26MPXS_03	PA67290-0015
2007919503	G00980	38KBAW26MVN	PA67290-0020
2007919504	G00981	38KBAW33MPN	PA67290-0020
2007920801	G00983Q	38KBAW33MPX	PA67290-0025
2007928401	G00987	38KBIW21MPN	PA67290-0025
2007928501	G00988	38KBIW21MPX	PA67290-0030
2007928601	G00993Q	38KBIW21MVN	PA67290-0030
2007928701	G01066	38KBIW26MEX	PA67290-0035
2007929201	G01067	38KBIW26MPN	PA67290-0035
2007931801	G01068Q	38KBIW26MPX	PA67290-0050

2007931802	G01069Q	38KBIW26MVN	PA67290-0050
2007934101	G01070	38KBIW26MVX	PA67300-0005
2007950301	G01071	38KBIW33MPN	PA67300-0005
2007953801	G01088Q	38KBIW33MPX	PA67300-0010
2007962201	G01089Q	38KBTF13MPN	PA67300-0010
2007963101	G01091	38KBTF13MPX	PA67300-0015
2007963201	G01094	38KBTF16MPN	PA67300-0015
2007964102	G01095	38KBTF16MPX	PA67300-0020
2007992301	G01096	38KBTF19MPN	PA67300-0020
2007992802	G01097	38KBTF19MPX	PA67300-0025
2007996701	G01098Q	38KBTF25MEN	PA67300-0025
2007996702	G01099Q	38KBTF25MPN	PA67300-0025
2008003602	G01100	38KBTF25MPX	PA67300-0025
2008006701	G01101	38KBTF25MVX	PA67300-0035
2008009003	G01118Q	38KFAW21MPX	PA67300-0035
2008014901	G01119Q	38KFTF25MPX	PA67300-0040
2008024502	G01278	38P102QBM3MG201	PA67300-0040
2008036101	G01279	38P105QBF1MG201	PA67300-0050
2008043301	G01280	38P105QBM3MG201	PA67300-0050
2008043401	G01281Q	38P105QBT1MG201	PA67310-0005
2008050401	G01282Q	38P110QBF1MG201	PA67310-0005
2008051301	G01283	38P110QBF2MH201	PA67310-0010
2008052601	G01284	38P110QBF3MG201	PA67310-0010
2008053301	G01300	38P110QBM3KG201	PA67310-0010
2008072901	G01301Q	38P110QBM3MG201	PA67310-0010
2008085901	G01302Q	38P110QBM3MG241	PA67310-0015
2008088302	G01312	38P110QBPMG201	PA67310-0015
2008089101	G01313	38P110QBPMG241	PA67310-0015
2008089301	G01314	38P110QBT1KG201	PA67310-0015
2008089401	G01315Q	38P110QBT1KH201	PA67310-0020
2008089501	G01316Q	38P110QBT1MG201	PA67310-0020
2008089701	G01317	38P110QBT1MG241	PA67310-0020
2008090301	G01318	38P110QHBT1MG202	PA67310-0020
2008090401	G01334	38P110QVM3MG201	PA67310-0025
2008091601	G01335Q	38P120QBM3MG201	PA67310-0025
2008094901	G01336Q	38P120QBT1KG201	PA67310-0025
2008145101	G01343	38P120QBT1MG201	PA67310-0025
2008151901	G01344	38P120QBT1MH201	PA67310-0030
2008188001	G01349	38P120QVM3MG201	PA67310-0030
2008257301	G01350	38P202QBM3MG241	PA67310-0040
2008270401	G01359	38P202QBNMG201	PA67310-0040
2008270402	G01360	38P202QBT1MG201	PA67310-0045
2008271201	G01365	38P202QBT1MG241	PA67310-0045
2008271202	G01366	38P202QHBM3MG202	PA67310-0050
2008272801	G01367	38P202QVF1MH201	PA67310-0050
2008272901	G01368	38P202QVM3MG201	PA67310-0080
2008273001	G01369Q	38P205QBF1MG201	PA67310-0080
2008273101	G01370Q	38P205QBF1MG241	PA67320-0005
2008276001	G01371	38P205QBF3MG241	PA67320-0005
2008282401	G01372	38P205QBM3KG201	PA67320-0005
2008282402	G01387	38P205QBM3MG201	PA67320-0005
2008283801	G01389Q	38P205QBT1MG201	PA67320-0010
2008284301	G01390Q	38P205QHBT1MG202	PA67320-0010

2008287601	G01398	38P205QHBT1MG242	PA67320-0010
2008287701	G01400	38P210QBF1MG201	PA67320-0010
2008291701	G01401	38P210QBF1MG241	PA67320-0015
2008292001	G01402Q	38P210QBM3KG201	PA67320-0015
2008295401	G01403Q	38P210QBM3MG201	PA67320-0020
2008299802	G01404	38P210QBM3MG241	PA67320-0020
2008299902	G01405	38P210QBM3MH201	PA67320-0025
2008301801	G01422Q	38P210QBPMG201	PA67320-0025
2008302601	G01423Q	38P210QBPMG241	PA67320-0025
2008302701	G01428Q	38P210QBT1MG201	PA67320-0025
2008302801	G01429Q	38P210QBT1MG241	PA67320-0025ATEX
2008302901	G01432Q	38P210QBT1MH201	PA67320-0025ATEX
2008303001	G01434Q	38P210QBT1MR201	PA67320-0030
2008303101	G01435Q	38P210QBT1MR241	PA67320-0030
2008305701	G01438Q	38P210QBT1MS241	PA67320-0035
2008309301	G01441Q	38P210QHBF2MG242	PA67320-0035
2008330101	G01442Q	38P210QHBM3MG242	PA67320-0040
2008331501	G01445Q	38P210QHBT1MG201	PA67320-0040
2008331602	G01446Q	38P210QHBT1MG202	PA67320-0050
2008334901	G01447Q	38P210QHBT1MG242	PA67320-0050
2032009033	G01448Q	38P210QHBT1MH202	PA67320-0050
2032009034	G01451Q	38P220QBM3MG201	PA67320-0050
2032012039	G01452Q	38P220QBT1MG201	PA67320-0050ATEX
2032012044	G01453Q	38P220QBT1MR241	PA67320-0050ATEX
2032012045	G01454Q	38SBAW21MEX	PA67320-0080
2032012046	G01458Q	38SBAW21MPN	PA67320-0080
2032013036	G01459Q	38SBAW21MPX	PA67330-0005
2032017026	G01460Q	38SBAW26MPN	PA67330-0005
2032017030	G01489Q	38SBAW26MPX	PA67330-0010
2032023068	G01576	38SBAW26MPXS_01	PA67330-0010
2032030046	G01639	38SBAW26MVN	PA67330-0010
2032030049	G01671	38SBAW33MPN	PA67330-0010
2035004073	G01775Q	38SBAW33MPX	PA67340-0005
2035008112	G01916Q	38SBIW21MPN	PA67340-0005
2035008125	G01922Q	38SBIW21MPX	PA67340-0010
2035008130	G01926Q	38SBIW26MEX	PA67340-0010
2035008138	G01927Q	38SBIW26MPN	PA67340-0025
2035025005	G01930Q	38SBIW26MPX	PA67340-0025
2036030021	G01932Q	38SBIW26MPXS	PA67350-0005
2036100000	G01934Q	38SBIW26MVN	PA67350-0005
2036430004	G01938Q	38SBIW26MVX	PA67350-0010
2037060022	G01940Q	38SBIW33MPN	PA67350-0010
2037100029	G01942Q	38SBIW33MPX	PA67350-0015
2038023076	G01946Q	38SBTF13MPN	PA67350-0015
2041006003	G01948Q	38SBTF13MPX	PA67350-0025
2041009005	G01950Q	38SBTF16MPN	PA67350-0025
2041012006	G01954Q	38SBTF16MPX	PA67360-0005
2041023013	G01956Q	38SBTF19MPN	PA67360-0005
2041027010	G01988	38SBTF19MPX	PA67360-0010
2041030011	G01989	38SBTF25MPN	PA67360-0010
2041039048	G01990	38SBTF25MPX	PA67360-0015
2041050013	G01991	38SBTF25MVX	PA67360-0015
2041050015	G01996	38SFAW21MXN	PA67360-0025

2041050062	G02000	38SFAW21MXX	PA67360-0025
2041080010	G02001	38SFAW26MXN	PA67370-0010
2041080023	G02002	38SFAW26MXX	PA67370-0010
2041100016	G02003	38SFAW33MXN	PA67370-0015
2041100018	G02006	38SFAW33MXX	PA67370-0015
2041150008	G02007	38SFIW21MXN	PA67370-0020
2041150013	G02008	38SFIW21MXX	PA67370-0020
2041200008	G02009	38SFIW26MXN	PA67370-0025
2042010001	G02012	38SFIW26MXX	PA67370-0025
2042010008	G02013	38SFIW33MXN	PA67370-0030
2042010009	G02014	38SFIW33MXX	PA67370-0030
2042020000	G02015	38SFTF13MXN	PA67370-0050
2042020001	G02018	38SFTF13MXX	PA67370-0050
2042020003	G02019	38SFTF16MXN	PA67370-0054
2042020006	G02020	38SFTF16MXX	PA67370-0054
2042020017	G02021	38SFTF19MXN	PA67370-0100
2042030002	G02062	38SFTF19MXX	PA67370-0100
2042030010	G02068	38SFTF25MXN	PA67370-0125
2042030012	G02074	38SFTF25MXX	PA67370-0125
2042030023	G02085	3900 04 00	PA67380-0005
2042040001	G02175Q	3900 06 00	PA67380-0005
2042040003	G02194	3900 08 00	PA67380-0010
2042040004	G02236	3900 10 00	PA67380-0010
2042040008	G02427	3900 12 00	PA67380-0015
2042040009	G02567Q	3901 04 10	PA67380-0015
2042040011	G02569Q	3901 04 19	PA67380-0020
2042040012	G02614	3901 06 10	PA67380-0020
2042040014	G02620	3901 06 13	PA67380-0025
2042040018	G02714Q	3901 06 19	PA67380-0025
2042040021	G02717Q	3901 08 10	PA67380-0030
2045002002	G02718Q	3901 08 13	PA67380-0030
2045004006	G02721Q	3901 08 17	PA67380-0040
2045007011	G02723Q	3901 10 13	PA67380-0040
2045007012	G02724Q	3901 10 17	PA67380-0050
2045007031	G02726Q	3901 12 13	PA67380-0050
2045007036	G02727Q	3901 12 17	PA67410-0010
2045012015	G03691Q	3902 04 00	PA67410-0010
2045012044	G03692	3902 06 00	PA67410-0015
2045012065	G03732Q	3902 08 00	PA67410-0015
2045020004	G03733Q	3902 10 00	PA67410-0025
2045020005	G03737Q	3902 12 00	PA67410-0025
2045020006	G03738Q	3902 55 00	PA67420-0005
2045020007	G03740Q	3902 56 00	PA67420-0005
2045020011	G03760Q	3902 60 00	PA67420-0010
2045025004	G03762Q	3902 62 00	PA67420-0010
2045025007	G03764Q	3903 04 10	PA67420-0015
2047010012	G03766Q	3903 04 11	PA67420-0015
2049000005	G03769Q	3903 04 13	PA67420-0017
2049000006	G03773Q	3903 06 10	PA67420-0017
2049000027	G03774Q	3903 06 11	PA67420-0025
2049000028	G03797Q	3903 06 13	PA67420-0025
2049000030	G03817	3903 06 14	PA67420-0030
2049000037	G03828	3903 08 10	PA67420-0030

2049000042	G04041Q	3903 08 11	PA67420-0040
2049000043	G04048Q	3903 08 13	PA67420-0040
2049000048	G04083Q	3903 08 14	PA67420-0050
2049000070	G04156Q	3903 10 13	PA67420-0050
2049000071	G04167Q	3903 10 14	PA67420-0060
2049000082	G04169Q	3903 10 17	PA67420-0060
2049000084	G04173	3903 10 18	PA67420-0070
2049000085	G04189Q	3-903-N552-9	PA67420-0070
2049000087	G04190Q	3904 04 00	PA67420-0080
2049000088	G04191Q	3904 06 00	PA67420-0080
2049000097	G04192Q	3904 08 00	PA67420-0100
2049000098	G04242	3904 10 00	PA67420-0100
2049000099	G04243	3904 12 00	PA67420-0110
2049010000	G04244	3904 55 00	PA67420-0110
2049010001	G04245	3904 56 00	PA67420-0160
2049010002	G04246	3904 60 00	PA67420-0160
2049010003	G04247	3904 62 00	PA67430-0010
2049010004	G04248	3-904-N552-9	PA67430-0010
2049010005	G04249	3-904-V894-9	PA67430-0025
2049010006	G04250	3905 04 10	PA67430-0025
2049010009	G04251	3905 04 11	PA67430-0050
2049010010	G04252	3905 04 13	PA67430-0050
2049010012	G04253	3905 06 10	PA67440-0010
2049010013	G04254	3905 06 11	PA67440-0010
2049010015	G04255	3905 06 13	PA67440-0010
2049010016	G04256	3905 06 14	PA67440-0010
2049010017	G04258	3905 08 10	PA67440-0015
2049010018	G04259	3905 08 11	PA67440-0015
2049010020	G04260	3905 08 13	PA67440-0025
2049010021	G04261	3905 08 14	PA67440-0025
2049010022	G04263	3905 08 17	PA67440-0030
2049010023	G04264	3905 10 13	PA67440-0030
2049010025	G04265	3905 10 14	PA67440-0040
2049010027	G04266	3905 10 17	PA67440-0040
2049010033	G04267	3905 10 18	PA67440-0050
2049010034	G04268	3905 12 13	PA67440-0050
2049010038	G04269	3905 12 14	PA67440-0050
2049010039	G04271	3905 12 17	PA67440-0050
2049010050	G04272	3905 12 18	PA67440-0080
2049010051	G04273	3905 12 21	PA67440-0080
2049010052	G04274	3905 12 22	PA67440-0080
2049010056	G04275	3905 55 11	PA67440-0080
2049010058	G04276	3905 55 14	PA67440-0100
2049010061	G04277	3905 56 11	PA67440-0100
2049010062	G04280	3905 56 14	PA67440-0110
2049010063	G04282	3905 60 14	PA67440-0110
2049010064	G04283	3905 60 18	PA67440-0125
2049010065	G04284	3905 62 14	PA67440-0125
2049010066	G04285	3905 62 18	PA67440-0150
2049010069	G04286	3905 62 22	PA67440-0150
2049020017	G04287	3-905-N552-9	PA67440-0160
2049030001	G04288	3906 04 00	PA67440-0160
2049030003	G04290	3906 06 00	PA67440-0200

2049030004	G04291	3906 08 00	PA67440-0200
2049030007	G04292	3906 10 00	PA67440-0250
2049030008	G04293	3906 12 00	PA67440-0250
2049030010	G04294	3906 55 00	PA67440-0320
2049030011	G04296	3906 56 00	PA67440-0320
2049030012	G04298	3906 60 00	PA67450-0010
2049030013	G04299	3906 62 00	PA67450-0010
2049030029	G04300	3906M	PA67450-0015
2049030115	G04301	3-906-N0702-9	PA67450-0015
2049040000	G04302	3-906-N552-9	PA67450-0025
2049040015	G04303	3-906-V894-9	PA67450-0025
2049040018	G04304	3-907-N552-9	PA67450-0030
2049040019	G04307	3908 04 10	PA67450-0030
2049040022	G04308	3908 04 11	PA67450-0050
2049040027	G04309	3908 04 13	PA67450-0050
2049040033	G04310	3908 06 10	PA67460-0010
2049050023	G04314	3908 06 11	PA67460-0010
2049050035	G04315	3908 06 13	PA67460-0015
2049050036	G04316	3908 06 14	PA67460-0015
2049050051	G04317	3908 08 10	PA67460-0020
2049050052	G04318	3908 08 11	PA67460-0020
2180500095	G04319	3908 08 13	PA67460-0025
2180500099	G04322	3908 08 14	PA67460-0025
2181303087	G04323	3908 08 17	PA67460-0025
2181305110	G04324	3908 10 13	PA67460-0025
2181700073	G04325	3908 10 14	PA67460-0025ATEX
2181700087	G04328	3908 10 17	PA67460-0025ATEX
2181700088	G04330	3908 10 18	PA67460-0030
2181701220	G04331	3-908-N0702-9	PA67460-0030
3074010001	G04332	3-908-N552-9	PA67460-0035
3074010002	G04333	3-908-V894-9	PA67460-0035
3074010003	G04336	3909 04 10	PA67460-0040
3074010004	G04337	3909 04 11	PA67460-0040
3074010005	G04342Q	3909 04 13	PA67460-0050
3074010007	G04343Q	3909 06 10	PA67460-0050
3074010008	G04344Q	3909 06 11	PA67460-0050
3074010009	G04345Q	3909 06 13	PA67460-0050
3074010010	G04348Q	3909 06 14	PA67460-0050ATEX
3074010014	G04351Q	3909 08 10	PA67460-0050ATEX
3074010015	G04352Q	3909 08 11	PA67460-0060
3074010019	G04353Q	3909 08 13	PA67460-0060
3074010027	G04354Q	3909 08 14	PA67460-0080
3074010028	G04358Q	3909 08 17	PA67460-0080
3080851607	G04359Q	3909 10 13	PA67460-0100
3081200025	G04360Q	3909 10 14	PA67460-0100
3081702110	G04361Q	3909 10 17	PA67460-0100ATEX
3081702310	G04364Q	3909-00600	PA67460-0100ATEX
3081793110	G04366Q	3909-00600	PA67460-0125
3081900021	G04368Q	3-910-N552-9	PA67460-0125
3081901022	G04369Q	3-910-V894-9	PA67460-0160
3081902021	G04370Q	3911FIL	PA67460-0160
3081902022	G04376Q	3911FIL	PA67460-0165
3081902119	G04377Q	3-912-N552-9	PA67460-0165

3081905021	G04382Q	3-912-V894-9	PA67460-0180
3081906021	G04383Q	3913681031-K	PA67460-0180
3081909521	G04384Q	3-914-N552-9	PA67460-0200
3081980021	G04385Q	3-914-V709-90	PA67460-0200
3081982021	G04386Q	3915P-023-000	PA67460-0200
3081983015	G04394Q	3916 04 00	PA67460-0200
3111211043	G04395Q	3916 06 00	PA67460-0250
3111221043	G04396Q	3916 08 00	PA67460-0250
3111700000	G04397Q	3916 10 00	PA67460-0320
3111700002	G04398	3916 12 00	PA67460-0320
3111700022	G04399	3916 55 00	PA67460-0350
3111700023	G04400	3916 56 00	PA67460-0350
3111700031	G04401	3916 60 00	PA67460-0400
3111700033	G04402	3916 62 00	PA67460-0400
3111700090	G04403	3-916-N0702-9	PA67460-0500
3111700101	G0440SX	3-916-N552-9	PA67460-0500
3111701000	G04455Q	3-916-V894-9	PA67460-0500TIMMER
3111701008	G04467	39182-12-10B	PA67460-0500TIMMER
3111701043	G04500	39182-12-12	PA67470-0010
3111701091	G04502	39182-12-12B	PA67470-0010
3111701102	G04656	39182-12-12C	PA67470-0015
3111702002	G04679Q	39182-2-4	PA67470-0015
3111702102	G04684Q	39182-2-4B	PA67470-0025
3111704033	G04687Q	39182-4-4	PA67470-0025
3111704101	G04688Q	39182-4-4B	PA67470-0030
3111705033	G04703	39182-4-4C	PA67470-0030
3111705101	G04704	39182-4-6	PA67470-0050
3111706101	G04705	39182-4-6B	PA67470-0050
3111706102	G04706	39182-4-6C	PA67470-0050
3111707102	G04711	39182-6-6	PA67470-0050
3111711102	G04712	39182-6-6B	PA67480-0010
3160800005	G04713	39182-6-6C	PA67480-0010
3161300001	G04714	39182-6-8B	PA67480-0015
3161310001	G04716	39182-8-10B	PA67480-0015
3161600007	G04717	39182-8-8	PA67480-0020
3161600013	G04718	39182-8-8B	PA67480-0020
3161600015	G04720	39182-8-8C	PA67480-0025
3161600016	G04721	3-920-N552-9	PA67480-0025
3161600030	G04722	3921 04 10	PA67480-0030
3161700003	G04724	3921 04 11	PA67480-0030
3161700008	G04725	3921 04 13	PA67480-0040
3181202002	G04726	3921 06 10	PA67480-0040
3181221260	G04727Q	3921 06 11	PA67480-0050
3181305411	G04730	3921 06 13	PA67480-0050
3181600001	G04739	3921 06 14	PA67480-0050
3181600003	G04745Q	3921 08 10	PA67480-0050
3181700028	G04748Q	3921 08 11	PA67480-0060
3181700029	G04LL71	3921 08 13	PA67480-0060
3181700250	G04LL71X	3921 08 14	PA67480-0070
3181700275	G04LLCF	3921 08 17	PA67480-0070
3181701072	G04LLCFX	3921 10 13	PA67480-0080
3181701128	G04LLMS	3921 10 14	PA67480-0080
3181701220	G04LLSA731BOFF71	3921 10 17	PA67480-0085

3181701250	G04ZLLCF	3921 10 18	PA67480-0085
3181701275	G06L31BOFF71	3921 12 13	PA67480-0100
3181702072	G06L71	3921 12 14	PA67480-0100
3181703072	G06L71X	3921 12 17	PA67480-0100ATEX
3181704003	G06LCF	3921 12 18	PA67480-0100ATEX
3181706072	G06LCFX	3921 12 21	PA67480-0110
3181708003	G06LDPR71CF	3921 12 22	PA67480-0110
3181710128	G06LL71	3921 55 11	PA67480-0120
3181711029	G06LL71X	3921 56 11	PA67480-0120
3181712073	G06LLCF	3921 56 14	PA67480-0121
3181712260	G06LLCFX	3921 60 14	PA67480-0121
3181713029	G06LLMS	3921 60 18	PA67480-0125
3181713072	G06LLMSX	3921 62 14	PA67480-0125
3181721029	G06LMS	3921 62 18	PA67480-0140
3181721412	G06LMSX	3921 62 22	PA67480-0140
3181722072	G06LSPH71	3922-16-00600-0000-000000	PA67480-0150
3181722260	G06S71	3922-16-00600-0000-000000	PA67480-0150
3181733128	G06S71X	3-924-N552-9	PA67480-0160
3181740128	G06SCF	39282-10-10	PA67480-0160
3181784075	G06SCFX	39282-12-12	PA67480-0160ATEX
3182203072	G06SMMSSPH71	39282-12-12B	PA67480-0160ATEX
3301325500	G06SMS	39282-12-12C	PA67480-0180
3302725000	G06SMSX	39282-16-16	PA67480-0180
3309110061	G06ZL71	39282-16-16B	PA67480-0190
3309110069	G06ZLCF	39282-4-4	PA67480-0190
3309110093	G06ZLLCF	39282-4-4B	PA67480-0200
3309110095	G06ZLVITCF	39282-4-4C	PA67480-0200
3309110096	G06ZS71	39282-6-6	PA67480-0250
3309110097	G06ZSCF	39282-6-6B	PA67480-0250
3309110098	G08L71	39282-6-6C	PA67480-0300
3309110099	G08L71X	39282-8-8	PA67480-0300
3309110100	G08LCF	39282-8-8B	PA67480-0320
3309110101	G08LCFX	39282-8-8C	PA67480-0320
3309110104	G08LDPR71CF	393000D012	PA67480-0360
3309110105	G08LL71	393000D024	PA67480-0360
3309110106	G08LL71X	393000H245	PA67480-0370
3309111328	G08LLCF	393000H246	PA67480-0370
3309111329	G08LLCFX	393000H445	PA67480-0400
3309111331	G08LLMS	393000H446	PA67480-0400
3309111334	G08LLMSX	393000K001	PA67480-0470
3309111335	G08LMS	393000K002	PA67480-0470
3309111336	G08LMSX	393000K003	PA67480-0500
3309111337	G08LSPH71	393000K004	PA67480-0500
3309111338	G08LSTL2CF	393000K005	PA67480-0550
3309111339	G08S71	393000K006	PA67480-0550
3309111340	G08S71X	393000K007	PA67490-0010
3309111341	G08SCF	393000K008	PA67490-0010
3309111342	G08SCFX	393000K009	PA67490-0015
3309111343	G08SMS	393000K010	PA67490-0015
3309111344	G08SMSX	393000K023	PA67490-0020
3309111345	G08ZL71	393000K027	PA67490-0020
3309111346	G08ZLCF	393000K028	PA67490-0025
3309111347	G08ZLSSACF	393000K031	PA67490-0025

3309111348	G08ZLVITCF	393000K033	PA67490-0025ATEX
3309111349	G08ZS71	393000K035	PA67490-0025ATEX
3309111350	G08ZSCF	393000K036	PA67490-0030
3309111351	G08ZSVITCF	393000K037	PA67490-0030
3309111352	G10L71	393000K044	PA67490-0040
3309111353	G10L71X	393000K055	PA67490-0040
3309111354	G10L71XBP	393000K058	PA67490-0050
3309111355	G10LCF	393000K062	PA67490-0050
3309111356	G10LCFX	393000K066	PA67490-0060
3309111357	G10LDPR71CF	393000K067	PA67490-0060
3309111358	G10LL71	393000K068	PA67490-0080
3309111359	G10LL71X	393000K073	PA67490-0080
3309111360	G10LLCF	393000K074	PA67490-0100
3309111361	G10LLCFX	393000K075	PA67490-0100
3309111362	G10LLMS	393000K076	PA67490-0125
3309111363	G10LLMSX	393000K077	PA67490-0125
3309111364	G10LMS	393000K134	PA67490-0140
3309111365	G10LMSX	393000K151	PA67490-0140
3309111366	G10LOFF71	393000K152	PA67490-0150
3309111367	G10LSPH71	393000K169	PA67490-0150
3309111368	G10S71	393000K170	PA67490-0160
3309111369	G10S71X	393000K171	PA67490-0160
3309111371	G10SCF	393000K172	PA67490-0180
3309111375	G10SCFX	393000K176	PA67490-0180
3309111376	G10SMS	393000K177	PA67490-0200
3309111378	G10SMSX	393000K178	PA67490-0200
3309111380	G10SSTOSS71	393000K179	PA67490-0250
3309111383	G10SSTOSSOR71	393000K180	PA67490-0250
3309111387	G10ZL71	393000K181	PA67490-0250
3309111389	G10ZLCF	393000K182	PA67490-0250
3309111390	G10ZLSSACF	393000K183	PA67490-0320
3309111391	G10ZLVITCF	393000K184	PA67490-0320
3309111392	G10ZLVITSSACF	393000K185	PA67490-0800
3309111393	G10ZS71	393000K186	PA67490-0800
3309111394	G10ZSCF	393000K187	PA67500-0010
3309111395	G10ZSNBR71	393000K188	PA67500-0010
3309111396	G10ZSVITCF	393000K189	PA67500-0020
3309111397	G124553	393000K190	PA67500-0020
3309111398	G124554	393000K191	PA67500-0025
3309111401	G12L71	393000K192	PA67500-0025
3309111405	G12L71X	393000K193	PA67500-0030
3309111406	G12L71XBP	393000K194	PA67500-0030
3309111407	G12LCF	393000K195	PA67500-0040
3309111408	G12LCFX	393000K196	PA67500-0040
3309111409	G12LDPR71CF	393000K197	PA67500-0050
3309111410	G12LDPR71MS	393000K198	PA67500-0050
3309111411	G12LL71	393000K205	PA67510-0010
3309111412	G12LLCF	393000K208	PA67510-0010
3309111415	G12LLCFX	393000K209	PA67510-0013
3309111416	G12LLMS	393000K233	PA67510-0013
3309111417	G12LLMSX	393000K235	PA67510-0025
3309111418	G12LMS	393000K236	PA67510-0025
3309111419	G12LMSX	393000K237	PA67510-0025

3309111420	G12LOFF71	393000K239	PA67510-0025
3309111421	G12LSPH71	393000K241	PA67510-0030
3309111422	G12S71	393000K242	PA67510-0030
3309111423	G12S71X	393000K245	PA67510-0039
3309111426	G12SCF	393000K246	PA67510-0039
3309111427	G12SCFX	393000K253	PA67510-0040
3309111428	G12SDPR71MS	393000K255	PA67510-0040
3309111429	G12SMMSSPH71	393000K259	PA67510-0050
3309111434	G12SMS	393000K284	PA67510-0050
3309111436	G12SMSX	393000K319	PA67510-0050
3309111439	G12SSTOSS71	393000K320	PA67510-0050
3309111440	G12ZL71	393000K337	PA67510-0060
3309111441	G12ZLCF	393000K339	PA67510-0060
3309111442	G12ZLSSACF	393000K340	PA67510-0076
3309111444	G12ZLVITCF	393000K341	PA67510-0076
3309111448	G12ZS71	393000K342	PA67510-0080
3309111451	G12ZSCF	393000K343	PA67510-0080
3309111453	G12ZSVITCF	393000K344	PA67510-0080ATEX
3309111454	G14S71	393000K355	PA67510-0080ATEX
3309111456	G14S71X	393000K408	PA67510-0090
3309111466	G14SCF	393000K409	PA67510-0090
3309111473	G14SCFX	393000K419	PA67510-0100
3309112221	G14SMS	393000K435	PA67510-0100
3309112229	G14SSTOSS71	393000K445	PA67510-0100
3309112234	G14ZS71	393000K446	PA67510-0100
3309112235	G14ZSCF	393000K469	PA67510-0110
3309112237	G14ZSVITCF	393000K470	PA67510-0110
3309112238	G15L71	393000K473	PA67510-0120
3309112239	G15L71X	393000K505	PA67510-0120
3309112240	G15L86CFVOLX	393000K506	PA67510-0120ATEX
3309112241	G15LCF	393000K537	PA67510-0120ATEX
3309112243	G15LCFVOLX	393000K538	PA67510-0125
3309112245	G15LCFX	393000K559	PA67510-0125
3309112247	G15LDPR71CF	393000K565	PA67510-0135
3309112248	G15LDPR71MS	393000K566	PA67510-0135
3309112253	G15LMS	393000K602	PA67510-0140
3309112254	G15LMSX	393000K603	PA67510-0140
3309112255	G15LSPH71	393000K616	PA67510-0150
3309112257	G15LSTOSSCF	393000K617	PA67510-0150
3309112258	G15ZL71	393000K632	PA67510-0160
3309112259	G15ZLCF	393000K646	PA67510-0160
3309112260	G15ZLSSACF	393000K656	PA67510-0180
3309112261	G15ZLVITCF	393000K657	PA67510-0180
3309112263	G15ZLVITSSACF	393000K746	PA67510-0185
3309112264	G16S71	393000K801	PA67510-0185
3309112266	G16S71X	393000K804	PA67510-0200
3309112271	G16SCF	393000K805	PA67510-0200
3309112273	G16SCFX	393000K807	PA67510-0210
3309112274	G16SMS	393000K808	PA67510-0210
3309112275	G16SMSX	393000K809	PA67510-0220
3309112278	G16ZS71	393000K811	PA67510-0220
3309112280	G16ZSCF	393000K812	PA67510-0250
3309112283	G16ZSNBR71	393000K813	PA67510-0250

3309112284	G16ZSVITCF	393000K817	PA67510-0300
3309112285	G18L71	393000K818	PA67510-0300
3309112293	G18L71X	393000K822	PA67510-0320
3309112296	G18LCF	393000K824	PA67510-0320
3309112299	G18LCFX	393000K825	PA67510-0350
3309112304	G18LDPR71CF	393000K826	PA67510-0350
3309112305	G18LDPR71MS	393000K827	PA67510-0400
3309112306	G18LMS	393000K828	PA67510-0400
3309112307	G18LMSX	393000K831	PA67510-0445
3309112308	G18LSPH71	393000K844	PA67510-0445
3309112309	G18ZL71	393000K845	PA67510-0450
3309112310	G18ZLCF	393000K846	PA67510-0450
3309120002	G18ZLVITCF	393000K847	PA67510-0460
3309121077	G18ZLVITSSACF	393000K849	PA67510-0460
3309121079	G20S	393000K850	PA67510-0500
3309121080	G20S71	393000K851	PA67510-0500
3309121082	G20S71X	393000K852	PA67510-0560
3309121083	G20SCF	393000K854	PA67510-0560
3309121084	G20SCFX	393000K855	PA67510-0600
3309121085	G20SMS	393000K857	PA67510-0600
3309121086	G20SMSX	393000K860	PA67510-0620
3309121087	G20SSTOSS71	393000K865	PA67510-0620
3309121089	G20SSTOSSCF	393000K866	PA67510-0650
3309121090	G20ZS71	393000K867	PA67510-0650
3309121091	G20ZSCF	393000K868	PA67510-0700
3309121092	G20ZSNBR71	393000K871	PA67510-0700
3309121094	G20ZSVITCF	393000K872	PA67510-0750
3309121095	G22L71	393000K892	PA67510-0750
3309121096	G22L71X	393000K903	PA67510-1000
3309121097	G22LCF	393000K904	PA67510-1000
3309121098	G22LCFVOLX	393000K908	PA67520-0010
3309121099	G22LCFX	393000K941	PA67520-0010
3309121103	G22LDPR71CF	393000K944	PA67520-0025
3309121105	G22LMS	393000K945	PA67520-0025
3309121106	G22LMSX	393000K946	PA67520-0030
3309121107	G22LSTOSS71	393000K947	PA67520-0030
3309121109	G22ZL71	393000K948	PA67520-0040
3309121114	G22ZLCF	393000K950	PA67520-0040
3309121116	G22ZLSSACF	393000K984	PA67520-0050
3309121121	G22ZLVITCF	393000M012	PA67520-0050
3309121122	G22ZLVITSSACF	393000M024	PA67520-0060
3309121123	G25S71	393000N012	PA67520-0060
3309121124	G25S71X	393000N024	PA67520-0070
3309121125	G25SCF	393000S214	PA67520-0070
3309123003	G25SCFX	393000S218	PA67520-0080
3309131011	G25SDPR71CF	393000S222	PA67520-0080
3309131013	G25SDPR71MS	393000S226	PA67520-0100
3309141008	G25SMS	393000S230	PA67520-0100
3309141009	G25ZS71	393000S231	PA67520-0125
3309141011	G25ZSCF	393000S252	PA67520-0125
3309210015	G25ZSVITCF	393000S291	PA67520-0130
3309210016	G28L71	393000S304	PA67520-0130
3309219020	G28L71X	393000S308	PA67520-0150

3309219021	G28LCF	393000S312	PA67520-0150
3309219022	G28LCFX	393000S316	PA67520-0160
3309219025	G28LDPR71CF	393000S328	PA67520-0160
3309219028	G28LMS	393000S332	PA67520-0200
3309219030	G28LMSX	393000S346	PA67520-0200
3311133001	G28LSTOSSCF	393000S355	PA67520-0210
3311612101	G28ZL71	393000S357	PA67520-0210
3311808600	G28ZLCF	393000S373	PA67520-0250
3312706000	G28ZLSSACF	393000S390	PA67520-0250
3312708000	G28ZLVITCF	393000S393	PA67520-0250
3315020210	G28ZLVITSSACF	393000S396	PA67520-0250
3315020212	G30S71	393000S399	PA67520-0300
3315040201	G30S71X	393000S401	PA67520-0300
3315040205	G30SCF	393000S402	PA67520-0320
3318112901	G30SCFX	393000S403	PA67520-0320
3319110011	G30SMS	393000S405	PA67520-0330
3319110096	G30SMSX	393000S408	PA67520-0330
3319110124	G30SSTOSS71	393000S413	PA67520-0350
3319110152	G30ZS71	393000S418	PA67520-0350
3319110154	G30ZSCF	393000S426	PA67520-0350ATEX
3319110192	G30ZSNBR71	393000S428	PA67520-0350ATEX
3319110206	G30ZSVITCF	393000S463	PA67520-0360
3319110230	G35L71	393000S464	PA67520-0360
3319110265	G35L71X	393000S473	PA67520-0400
3319110267	G35LCF	393000S490	PA67520-0400
3319111039	G35LCFX	393000S503	PA67520-0430
3319111040	G35LDPR71CF	393000S506	PA67520-0430
3319111041	G35LDPR71MS	393000S513	PA67520-0450
3319111087	G35LMS	393000S529	PA67520-0450
3319111105	G35LMSX	393000S532	PA67520-0490
3319111139	G35ZL71	393000S536	PA67520-0490
3319111140	G35ZLCF	393000S545	PA67520-0500
3319111143	G35ZLVITCF	393000S557	PA67520-0500
3319111153	G35ZLVITSSACF	393000S570	PA67520-0580
3319111186	G38S	393000S577	PA67520-0580
3319111196	G38S71	393000S578	PA67520-0600
3319111206	G38S71X	393000S582	PA67520-0600
3319111209	G38SCF	393000S594	PA67520-0630
3319111210	G38SCFX	393000S598	PA67520-0630
3319111211	G38SMS	393000S615	PA67520-0680
3319111218	G38ZS71	393000S618	PA67520-0680
3319111229	G38ZSCF	393000S639	PA67520-0700
3319111231	G38ZSVITCF	393000S660	PA67520-0700
3319111234	G42L71	393000S664	PA67520-0960
3319111245	G42L71X	393000S684	PA67520-0960
3319111246	G42LCF	393000S691	PA67520-1050
3319111248	G42LCFX	393000S713	PA67520-1050
3319111251	G42LDPR71CF	393000S723	PA67520-1150
3319111252	G42LMS	393000S732	PA67520-1150
3319111258	G42LSTOSSCF	393000S781	PA67520-1200
3319111261	G42ZL71	393000S832	PA67520-1200
3319111275	G42ZLCF	393000S865	PA67520-1500
3319111276	G42ZLVITCF	393000S869	PA67520-1500

3319111277	G4BMB10-1/4	393000S876	PA67520-1640
3319111278	G4BMB12-1/2	393000S879	PA67520-1640
3319111288	G4BMB14-1/2	393000S891	PA67520-1700
3319111296	G4BMB16-1/2	393000S911	PA67520-1700
3319111299	G4BMB18-1/2	393000S935	PA67520-2000
3319111304	G4BMB6-1/4	393000U013	PA67520-2000
3319111321	G4BMB6-1/8	393000U018	PA67540-0010
3319111322	G4BMB8-1/4	393000U020	PA67540-0010
3319111323	G4BMB8-1/8	393000U039	PA67540-0025
3319111324	G4BRAB12-3/4	393000U043	PA67540-0025
3319111325	G4BRAB16-1/2	393000U051	PA67540-0050
3319111326	G4BRAB6-1/8	393000U083	PA67540-0050
3319111334	G4BRAB8-1/4	393000U099	PA67540-0080
3319111335	G4BRAB8-3/8	393000U115	PA67540-0080
3319111337	G4PB4-1/8	393000U150	PA67550-0010
3319111338	G4PB6-1/4	393000U171	PA67550-0010
3319111339	G4PB6-1/8	393000U197	PA67550-0010
3319111340	G4PB8-1/4	393000U208	PA67550-0010
3319111341	G4PB8-1/8	393000U222	PA67550-0025
3319111342	G4PMB4-1/8	393000U223	PA67550-0025
3319111343	G4PMB6-1/4	393000U226	PA67550-0040
3319111344	G4PMB6-1/8	393000U258	PA67550-0040
3319111345	GA0040WBD3EG121	393000U407	PA67550-0050
3319111347	GA0040WBE3EG121	393000U537	PA67550-0050
3319111348	GA005QLVE1EG122	393000U839	PA67550-0125
3319111349	GA005QVE3EG121	393000W018	PA67550-0125
3319111352	GA0060WBE1EG121	3931 04 10	PA67550-0160
3319111353	GA010QLBD1EG121	3931 04 13	PA67550-0160
3319111354	GA010QVE3EG121	3931 04 19	PA67560-0010
3319111372	GA0120WBE3EG121	3931 06 10	PA67560-0010
3319111379	GA0XXXBP2EG121	3931 06 13	PA67560-0025
3319111383	GA2040WBE3EG161	3931 08 10	PA67560-0025
3319111385	GA210QBP2EG161	3931 08 13	PA67560-0030
3319111386	GA3040WBD3BG161	3931 08 17	PA67560-0030
3319111387	GA3040WBD3EG161	3931 10 13	PA67560-0040
3319111388	GA3040WBE3BG161	3931 10 17	PA67560-0040
3319111389	GA3040WBE3EG161	3931 12 13	PA67560-0050
3319111401	GA3040WBP2EG161	3931 12 17	PA67560-0050
3319111402	GA3040WVP2EG161	3931 12 21	PA67560-0050
3319111403	GA3060WBD3EG161	3937FIL	PA67560-0050
3319111408	GA3XXXBP2EG161	3937FIL	PA67560-0080
3319111414	GA4060WBP2EG201	3953FIL	PA67560-0080
3319111421	GA410CBD3EG201	3953FIL	PA67560-0125
3319111426	GA410CBE3BG201	3954FIL	PA67560-0125
3319111430	GA410CBE3EG201	3954FIL	PA67560-0160
3319111437	GA410CBP2BG201	3963FIL	PA67560-0160
3319111439	GA410QLBD1EG201	3963FIL	PA67560-0200
3319111440	GA420QLBP2EG201	3964FIL	PA67560-0200
3319111445	GA464463	3964FIL	PA67570-0010
3319111450	GA465496	3965FIL	PA67570-0010
3319111461	GA466596U002	3965FIL	PA67570-0025
3319111466	GA468012U002	3966 04 06	PA67570-0025
3319111470	GA469201	3966 04 08	PA67570-0040

3319111486	GA470015U207	3966 06 08	PA67570-0040
3319112061	GA4XXXBNEG201	3966 06 10	PA67570-0050
3319112077	GA4XXXBP2EG201	3966 08 10	PA67570-0050
3319112078	GA500208	3966 08 12	PA67570-0080
3319112079	GA500221	3966 10 12	PA67570-0080
3319112094	GA500248	397000K029	PA67570-0100
3319112100	GA6040WBE3BG241	397000K030	PA67570-0100
3319112135	GA6040WBE3EG241	397000K031	PA67570-0125
3319112136	GA6040WBE4BG241	397000K036	PA67570-0125
3319112148	GA610CBE3BG241	397000K037	PA67570-0160
3319112154	GA620QLBP2HG241	397000K038	PA67570-0160
3319112171	GA7040WBD3EG241	397001K054	PA67580-0010
3319112184	GA710QBE3EG241	397001K055	PA67580-0010
3319112189	GA710QLBD3EG241	397001S009	PA67580-0025
3319112211	GA710QLBE3ES241	397001S011	PA67580-0025
3319112214	GA720QBD3EG241	3979 04 10	PA67580-0030
3319112223	GA720QBE3EG241	3979 04 13	PA67580-0030
3319120002	GA720QLBP2EG241	3979 06 10	PA67580-0040
3319120009	GA7XXXBP2EG241	3979 06 13	PA67580-0040
3319120019	GA7XXXNNXG242	3979 08 10	PA67580-0050
3319120021	GAE	3979 08 13	PA67580-0050
3319120030	GAE-250	3979 08 17	PA67580-0080
3319120049	GAI04LLRCFX	3979 10 13	PA67580-0080
3319121016	GAI06L1/4NPT71	3979 10 17	PA67580-0100
3319121032	GAI06L1/4NPT71X	3979 12 13	PA67580-0100
3319121078	GAI06L1/8NPT71	3979 12 17	PA67580-0110
3319121081	GAI06L1/8NPTCF	3979 12 21	PA67580-0110
3319121083	GAI06L1/8NPTCFX	398000D853	PA67580-0125
3319121089	GAI06LM71	398000ECH2	PA67580-0125
3319121090	GAI06LM71X	398000ECS2	PA67580-0135
3319121093	GAI06LMCF	398000ECSK	PA67580-0135
3319121094	GAI06LMCFX	398000ESI2	PA67580-0160
3319121108	GAI06LMSA47CFX	398000K001	PA67580-0160
3319121109	GAI06LR1/271	398000K005	PA67580-0160
3319121114	GAI06LR1/471	398000K008	PA67580-0160
3319121119	GAI06LR1/471X	398000K009	PA67580-0200
3319121120	GAI06LR1/4CF	398000K010	PA67580-0200
3319121121	GAI06LR1/4CFX	398000K011	PA67580-0250
3319121128	GAI06LR1/4MS	398000K042	PA67580-0250
3319121132	GAI06LR3/8CF	398000K044	PA67580-0320
3319121137	GAI06LR71	398000K045	PA67580-0320
3319121147	GAI06LR71X	398000K047	PA67580-0500
3319121148	GAI06LRCF	398000K050	PA67580-0500
3319121175	GAI06LRCFX	398000K054	PA67580-1500
3319122011	GAI06LRDPR71CF	398000K058	PA67580-1500
3319122012	GAI06LRMS	398000K060	PA67590-0025
3319122014	GAI06S1/4NPT71	398000K061	PA67590-0025
3319122019	GAI06S1/4NPT71X	398000K067	PA67590-0025
3319122037	GAI06S1/8NPTCFX	398000K069	PA67590-0025
3319122051	GAI06SM71	398000K072	PA67590-0030
3319122052	GAI06SM71X	398000K073	PA67590-0030
3319130008	GAI06SMCF	398000K074	PA67590-0040
3319131010	GAI06SMCFX	398000K075	PA67590-0040

3319131019	GAI06SMDPR71CF	398000K097	PA67590-0050
3319141004	GAI06SR1/271X	398000K098	PA67590-0050
3319210034	GAI06SR3/8CF	398000K099	PA67590-0060
3319211010	GAI06SR71	398000K1	PA67590-0060
3319212004	GAI06SR71X	398000K100	PA67590-0070
3319219014	GAI06SRCF	398000K101	PA67590-0070
3319219026	GAI06SRCFX	398000K102	PA67590-0080
3319219027	GAI06SRMS	398000K103	PA67590-0080
3319219028	GAI06ZL1/4NPTCF	398000K104	PA67590-0100
3319219030	GAI06ZL1/8NPTCF	398000K105	PA67590-0100
3319219033	GAI06ZLM71	398000K106	PA67590-0125
3319219037	GAI06ZLMCF	398000K123	PA67590-0125
3319219046	GAI06ZLR1/471	398000K159	PA67590-0135
3319219054	GAI06ZLR1/4CF	398000K167	PA67590-0135
3319219055	GAI06ZLR71	398000K172	PA67590-0170
3319219067	GAI06ZLRCF	398000K173	PA67590-0170
3319219070	GAI06ZLRVITCF	398000K201	PA67590-0200
3319219091	GAI06ZSMCF	398000K204	PA67590-0200
3321133001	GAI06ZSR71	398000K209	PA67590-0250
3331223400	GAI06ZSRCF	398000K210	PA67590-0250
3331225400	GAI08L1/4NPT71	398000K211	PA67590-0300
3331228400	GAI08L1/4NPT71X	398000K212	PA67590-0300
3331233400	GAI08L1/4NPTCFX	398000K238	PA67590-0320
3331238400	GAI08LM14X1.5CFX	398000K259	PA67590-0320
3331244400	GAI08LM71	398000K260	PA67590-0730
3331252400	GAI08LM71X	398000K267	PA67590-0730
3331923603	GAI08LMCF	398000K271	PA67600-0010
3332628000	GAI08LMCFX	398000K272	PA67600-0010
3332633010	GAI08LR1/271	398000K292	PA67600-0020
3332728000	GAI08LR1/271X	398000K293	PA67600-0020
3332733000	GAI08LR1/2CF	398000K301	PA67600-0025
3332738000	GAI08LR1/2CFX	398000K318	PA67600-0025
3332819010	GAI08LR1/2MS	398000K373	PA67600-0030
3332833010	GAI08LR3/871	398000K404	PA67600-0030
3332933773	GAI08LR3/871X	398000K405	PA67600-0032
3332952440	GAI08LR3/8CF	398000K420	PA67600-0032
3333000100	GAI08LR3/8CFX	398000K540	PA67600-0035
3333040088	GAI08LR3/8DMSCF	398000K601	PA67600-0035
3335020203	GAI08LR3/8MS	398000K602	PA67600-0040
3335050205	GAI08LR71	398000K603	PA67600-0040
3338119901	GAI08LR71X	398000K604	PA67600-0050
3339110018	GAI08LRCF	398000K801	PA67600-0050
3339110032	GAI08LRCFX	398000K802	PA67600-0060
3339110129	GAI08LRDPR71MS	398000K803	PA67600-0060
3339110215	GAI08LRMS	398000K805	PA67600-0080
3339110221	GAI08LROFF71X	398000K806	PA67600-0080
3339110228	GAI08LRSPH71	398000K807	PA67600-0100
3339110230	GAI08S1/4NPT71	398000K808	PA67600-0100
3339110233	GAI08S1/4NPT71X	398000K816	PA67600-0100
3339110238	GAI08S1/4NPTCF	398000K850	PA67600-0100
3339110327	GAI08SM71	398000K851	PA67600-0125
3339110359	GAI08SM71X	398000K852	PA67600-0125
3339110361	GAI08SMCF	398000K860	PA67600-0140

3339110363	GAI08SMCFX	398000K958	PA67600-0140
3339110364	GAI08SR1/2CF	398000K964	PA67600-0160
3339110365	GAI08SR3/8MSX	398000S143	PA67600-0160
3339110372	GAI08SR71	398000S148	PA67600-0180
3339111004	GAI08SR71X	398000S151	PA67600-0180
3339111014	GAI08SRCF	398000S152	PA67600-0200
3339111015	GAI08SRCFX	398000S154	PA67600-0200
3339111018	GAI08SRMSX	398000S161	PA67600-0220
3339111021	GAI08ZLM71	398000S164	PA67600-0220
3339111028	GAI08ZLMCF	398000S165	PA67600-0224
3339111033	GAI08ZLR1/271	398000S166	PA67600-0224
3339111038	GAI08ZLR1/2CF	398000S170	PA67600-0250
3339111046	GAI08ZLR3/8CF	398000S174	PA67600-0250
3339111047	GAI08ZLR71	398000S177	PA67600-0300
3339111048	GAI08ZLRCF	398000S183	PA67600-0300
3339111061	GAI08ZSMCF	398000S191	PA67600-0315
3339111088	GAI08ZSR71	398000S219	PA67600-0315
3339111096	GAI08ZSRCF	398000S228	PA67600-0320
3339111105	GAI10L1/4NPT71	398000S229	PA67600-0320
3339111106	GAI10L1/4NPT71X	398000S230	PA67600-0465
3339111119	GAI10L1/4NPTCF	398000S231	PA67600-0465
3339111138	GAI10L1/4NPTCFX	398000S232	PA67600-0500
3339111150	GAI10LM71	398000S267	PA67600-0500
3339111151	GAI10LM71X	398000S268	PA67600-1500
3339111152	GAI10LMCF	398000S299	PA67600-1500
3339111154	GAI10LMCFX	398000S343	PA67600-2000
3339111166	GAI10LR1/271	398000S344	PA67600-2000
3339111168	GAI10LR1/271X	398000S345	PA67610-0005
3339111175	GAI10LR1/2CF	398000S363	PA67610-0005
3339111190	GAI10LR1/2CFX	398000S364	PA67610-0010
3339111192	GAI10LR1/2DPR71CF	398000S365	PA67610-0010
3339111193	GAI10LR1/2MS	398000S372	PA67620-0005
3339111194	GAI10LR3/871	398000S444	PA67620-0005
3339111195	GAI10LR3/871X	398000S445	PA67630-0010
3339111196	GAI10LR3/8CF	398000S446	PA67630-0010
3339111200	GAI10LR3/8CFX	398000S447	PA67630-0015
3339111212	GAI10LR3/8DMSCF	398000S463	PA67630-0015
3339111226	GAI10LR3/8DPR71CF	398000S464	PA67630-0020
3339111229	GAI10LR3/8MS	398000S465	PA67630-0020
3339111237	GAI10LR71	398000S466	PA67630-0025
3339111238	GAI10LR71X	398000S467	PA67630-0025
3339111239	GAI10LRCF	398000S472	PA67640-0010
3339111240	GAI10LRCFX	398000S475	PA67640-0010
3339111242	GAI10LRDPR71CF	398000S476	PA67640-0025
3339111244	GAI10LRMS	3989 04 10	PA67640-0025
3339111245	GAI10S3/8NPT71	3989 04 13	PA67640-0050
3339111259	GAI10S3/8NPT71X	3989 06 10	PA67640-0050
3339111260	GAI10S3/8NPTCF	3989 06 11	PA67690-0025
3339111263	GAI10S3/8NPTCFX	3989 06 13	PA67690-0025
3339111274	GAI10SM71	3989 06 14	PA67700-0040
3339111285	GAI10SMCF	3989 08 10	PA67700-0040
3339111287	GAI10SMCFX	3989 08 11	PA67700-0100
3339111290	GAI10SR1/271X	3989 08 13	PA67700-0100

3339111292	GAI10SR1/2CF	3989 08 14	PA67720-0012
3339111295	GAI10SR1/2CFX	3989 08 17	PA67720-0012
3339111300	GAI10SR1/2MS	3989 10 13	PA67720-0025
3339111308	GAI10SR71	3989 10 14	PA67720-0025
3339111310	GAI10SR71X	3989 10 17	PA67720-0040
3339111312	GAI10SRCF	3989 10 18	PA67720-0040
3339111314	GAI10SRCFX	3989 12 13	PA67720-0050
3339111323	GAI10SRSPH71	3989 12 14	PA67720-0050
3339111325	GAI10ZLM71	3989 12 17	PA67740-0320
3339111327	GAI10ZLMCF	3989 12 18	PA67740-0320
3339111328	GAI10ZLR1/271	3989 12 21	PA67740-0350
3339111329	GAI10ZLR1/2CF	3989 12 22	PA67740-0350
3339111330	GAI10ZLR1/2SSACF	3989 56 11	PA67920-0005
3339111331	GAI10ZLR3/8CF	3989 56 14	PA67920-0005
3339111332	GAI10ZLR71	3989 60 14	PA67920-0010
3339111334	GAI10ZLRCF	3989 60 18	PA67920-0010
3339111335	GAI10ZSM71	3989 62 14	PA67920-0010
3339111336	GAI10ZSMCF	3989 62 18	PA67920-0010
3339111337	GAI10ZSRCF	3989 62 22	PA67920-0015
3339111338	GAI12L1/2NPT71	3993 04 10	PA67920-0015
3339111339	GAI12L1/2NPT71X	3993 04 13	PA67920-0020
3339111340	GAI12L1/2NPTCF	3993 04 19	PA67920-0020
3339111352	GAI12L1/2NPTCFX	3993 06 10	PA67920-0025
3339111358	GAI12L1/4NPTCF	3993 06 13	PA67920-0025
3339111360	GAI12L3/8NPT71	3993 08 10	PA67920-0030
3339111362	GAI12L3/8NPT71X	3993 08 13	PA67920-0030
3339111371	GAI12L3/8NPTCF	3993 08 17	PA67920-0040
3339111378	GAI12L3/8NPTCFX	3993 10 13	PA67920-0040
3339111382	GAI12LM71	3993 10 17	PA67920-0100
3339111385	GAI12LM71X	3993FIL	PA67920-0100
3339111386	GAI12LMCF	3993FIL	PA67930-0005
3339111388	GAI12LMCFX	3996FIL	PA67930-0005
3339111396	GAI12LR1/271	3996FIL	PA67930-0010
3339111399	GAI12LR1/271X	3997FIL	PA67930-0010
3339111401	GAI12LR1/2CF	3997FIL	PA67930-0015
3339111407	GAI12LR1/2CFX	3998 04 10	PA67930-0015
3339111409	GAI12LR1/2MS	3998 04 13	PA67930-0020
3339111410	GAI12LR1/2MSX	3998 04 19	PA67930-0020
3339111420	GAI12LR1/471	3998 06 10	PA67930-0025
3339111422	GAI12LR1/471X	3998 06 13	PA67930-0025
3339111427	GAI12LR1/4CF	3998 06 19	PA67930-0030
3339111446	GAI12LR1/4CFX	3998 08 10	PA67930-0030
3339111447	GAI12LR71	3998 08 13	PA67930-0040
3339111448	GAI12LR71X	3998 08 17	PA67930-0040
3339111449	GAI12LRCF	3998 10 13	PA67930-0050
3339111450	GAI12LRCFX	3998 10 17	PA67930-0050
3339111451	GAI12LRDPR71MS	3998FIL	PA67930-0065
3339111452	GAI12LRMS	3998FIL	PA67930-0065
3339111453	GAI12S1/2NPT71	3999 04 10	PA67930-0125
3339111454	GAI12S1/2NPT71X	3999 04 13	PA67930-0125
3339111455	GAI12S1/2NPTCF	3999 04 19	PA67940-0005
3339111456	GAI12S1/4NPT71X	3999 06 10	PA67940-0005
3339111457	GAI12S1/4NPTCF	3999 06 13	PA67940-0010

3339111458	GAI12S1/4NPTCFX	3999 06 19	PA67940-0010
3339111459	GAI12S3/8NPT71	3999 08 10	PA67940-0015
3339111460	GAI12S3/8NPTCF	3999 08 13	PA67940-0015
3339111461	GAI12SM71	3999 08 17	PA67940-0020
3339111462	GAI12SM71X	3999 10 13	PA67940-0020
3339111464	GAI12SMCF	3999 10 17	PA67940-0025
3339111467	GAI12SMCFX	39B82-10-6BK	PA67940-0025
3339111468	GAI12SR1/271	39B82-12-6BK	PA67940-0030
3339111473	GAI12SR1/271X	39B82-15-8BK	PA67940-0030
3339111475	GAI12SR1/2CF	39B82-6-4BK	PA67940-0040
3339111476	GAI12SR1/2CFX	39B82-8-4BK	PA67940-0040
3339111479	GAI12SR1/2MS	39C82-10-6BK	PA67940-0050
3339111480	GAI12SR1/2SPH71	39C82-12-6BK	PA67940-0050
3339111482	GAI12SR1/4CFX	39C82-15-8BK	PA67940-0060
3339111483	GAI12SR71	39C82-6-4BK	PA67940-0060
3339111487	GAI12SR71X	39C82-8-4BK	PA67940-0080
3339111488	GAI12SRCF	39KBAW26MPN	PA67940-0080
3339111494	GAI12SRCFX	39KBAW26MPX	PA67940-0100
3339111497	GAI12ZLM71	39KBAW33MPN	PA67940-0100
3339111503	GAI12ZLMCF	39KBAW33MPX	PA67940-0160
3339111505	GAI12ZLR1/271	39KBAW42MPN	PA67940-0160
3339111506	GAI12ZLR1/2CF	39KBAW42MPX	PA67950-0005
3339111507	GAI12ZLR1/4CF	39KBIW26MPN	PA67950-0005
3339111508	GAI12ZLR71	39KBIW26MPX	PA67950-0005
3339111509	GAI12ZLRCF	39KBIW26MVN	PA67950-0005
3339111511	GAI12ZSMCF	39KBIW33MPN	PA67950-0010
3339111513	GAI12ZSMSSACF	39KBIW33MPX	PA67950-0010
3339111516	GAI12ZSR1/271	39KBIW33MVX	PA67950-0010
3339111518	GAI12ZSR71	39KBIW42MPN	PA67950-0010
3339111519	GAI12ZSRCF	39KBIW42MPX	PA67950-0015
3339111520	GAI14S1/2NPT71	39KBTF19MPN	PA67950-0015
3339111523	GAI14S1/2NPT71X	39KBTF19MPX	PA67950-0020
3339111531	GAI14SM71	39KBTF25MPN	PA67950-0020
3339111533	GAI14SM71X	39KBTF25MPX	PA67950-0025
3339111536	GAI14SMCF	39KBTF25MPXS	PA67950-0025
3339111538	GAI14SMCFX	39KFIW26MPX	PA67950-0030
3339111541	GAI14SR71	39KFIW33MPX	PA67950-0030
3339111543	GAI14SR71X	39KFTF25MPX	PA67950-0040
3339111551	GAI14SRCF	39KLAW26MPN	PA67950-0040
3339111556	GAI14SRCFX	39KLAW26MPX	PA67950-0050
3339111565	GAI14ZSM71	39KLAW33MEX	PA67950-0050
3339111567	GAI14ZSRCF	39KLAW33MPN	PA67950-0055
3339111580	GAI15L1/2NPT71	39KLAW33MPX	PA67950-0055
3339111581	GAI15L1/2NPT71X	39KLAW33MVX	PA67950-0060
3339111592	GAI15L1/2NPTCF	39KLAW42MPX	PA67950-0060
3339111596	GAI15LM71	39KLIW26MPN	PA67950-0070
3339111601	GAI15LM71X	39KLIW26MPX	PA67950-0070
3339111602	GAI15LMCF	39KLIW33MPN	PA67950-0080
3339111603	GAI15LMCFX	39KLIW33MPX	PA67950-0080
3339111604	GAI15LR3/8CF	39KLIW42MPX	PA67950-0090
3339111606	GAI15LR3/8CFX	39KLTF19MPN	PA67950-0090
3339111612	GAI15LR71	39KLTF19MPX	PA67950-0100
3339111620	GAI15LR71X	39KLTF25MPN	PA67950-0100

3339111627	GAI15LRCF	39KLTF25MPX	PA67950-0120
3339111630	GAI15LRCFX	39SBAW26MPN	PA67950-0120
3339111631	GAI15LRDPR71CF	39SBAW26MPX	PA67950-0125
3339111633	GAI15LRDPR71MS	39SBAW26MVX	PA67950-0125
3339111634	GAI15LRMS	39SBAW33MPN	PA67950-0160
3339111635	GAI15LRMSX	39SBAW33MPX	PA67950-0160
3339111636	GAI15ZLMCF	39SBAW42MPN	PA67950-0180
3339111638	GAI15ZLR71	39SBAW42MPX	PA67950-0180
3339111639	GAI15ZLRCF	39SBIW26MPN	PA67950-0240
3339111641	GAI15ZLRSSACF	39SBIW26MPX	PA67950-0240
3339111642	GAI15ZLRVITCF	39SBIW26MVN	PA67960-0005
3339111651	GAI16S1/2NPT71	39SBIW33MPN	PA67960-0005
3339111653	GAI16S1/2NPT71X	39SBIW33MPX	PA67970-0010
3339111656	GAI16S1/2NPTCF	39SBIW42MPN	PA67970-0010
3339111669	GAI16S1NPTMS	39SBIW42MPX	PA67970-0015
3339111672	GAI16SM71	39SBTF19MPN	PA67970-0015
3339111676	GAI16SM71X	39SBTF19MPX	PA67980-0005
3339111678	GAI16SMCF	39SBTF25MPN	PA67980-0005
3339111679	GAI16SMCFX	39SBTF25MPX	PA67980-0010
3339111682	GAI16SR3/471	39SFAW26MXN	PA67980-0010
3339111685	GAI16SR3/4CFX	39SFAW26MXX	PA67980-0020
3339111686	GAI16SR3/8CFX	39SFAW33MXN	PA67980-0020
3339111687	GAI16SR71	39SFAW33MXX	PA67980-0025
3339111688	GAI16SR71X	39SFAW42MXN	PA67980-0025
3339111691	GAI16SRCF	39SFAW42MXX	PA67990-0005
3339111694	GAI16SRCFX	39SFIW26MXN	PA67990-0005
3339111697	GAI16ZSMCF	39SFIW26MXX	PA67990-0010
3339111698	GAI16ZSR71	39SFIW33MXN	PA67990-0010
3339111701	GAI16ZSRCF	39SFIW33MXX	PA67990-0015
3339111704	GAI18L1/2NPT71	39SFIW42MXN	PA67990-0015
3339111705	GAI18L1/2NPT71X	39SFIW42MXX	PA67990-0025
3339111708	GAI18L1/2NPTCF	39SFTF19MXN	PA67990-0025
3339111714	GAI18L1/2NPTCFX	39SFTF19MXX	PA68000-0010
3339111720	GAI18LM71	39SFTF25MXN	PA68000-0010
3339111721	GAI18LM71X	39SFTF25MXX	PA68010-0005
3339111722	GAI18LMCF	39SLAW26MPN	PA68010-0005
3339111723	GAI18LMCFX	39SLAW26MPX	PA68010-0015
3339111724	GAI18LR3/871	39SLAW33MEX	PA68010-0015
3339111728	GAI18LR3/871X	39SLAW33MPN	PA68010-0020
3339111729	GAI18LR3/8CF	39SLAW33MPX	PA68010-0020
3339111731	GAI18LR3/8CFX	39SLAW33MVX	PA68020-0015
3339111732	GAI18LR71	39SLAW42MPX	PA68020-0015
3339111735	GAI18LR71X	39SLIW26MPN	PA68030-0025
3339111737	GAI18LRCF	39SLIW26MPX	PA68030-0025
3339111739	GAI18LRCFX	39SLIW33MPN	PA68070-0025
3339111741	GAI18LRDPR71CF	39SLIW33MPX	PA68070-0025
3339111742	GAI18LRMS	39SLIW42MPX	PA68160-0005
3339111743	GAI18LRMSX	39SLTF19MPN	PA68160-0005
3339111748	GAI18ZLMCF	39SLTF19MPX	PA68160-0010
3339111750	GAI18ZLR3/871	39SLTF25MPN	PA68160-0010
3339111753	GAI18ZLR3/8CF	39SLTF25MPX	PA68160-0020
3339111758	GAI18ZLR71	3AF82-4-4B	PA68160-0020
3339111763	GAI18ZLRCF	3AF82-4-4C	PA68160-0025

3339111764	GAI18ZLRVITCF	3AF82-4-6B	PA68160-0025
3339112002	GAI18ZLRVITSSACF	3AF82-6-6B	PA68160-0025
3339112035	GAI20S1/2NPT71	3AF82-6-8C	PA68160-0025
3339112059	GAI20S1/2NPTCF	3AF82-8-8C	PA68160-0030
3339112068	GAI20S3/4NPT71	3B182-10-10	PA68160-0030
3339112080	GAI20S3/4NPT71X	3B182-12-12	PA68160-0040
3339112098	GAI20S3/4NPTCF	3B182-16-16-K	PA68160-0040
3339112099	GAI20S3/4NPTCFX	3B182-4-4	PA68170-0005
3339112102	GAI20SMCF	3B182-6-6	PA68170-0005
3339112113	GAI20SMCFX	3B182-6-6B	PA68170-0010
3339112115	GAI20SR71	3B182-8-8	PA68170-0010
3339112124	GAI20SR71X	3B282-10-10	PA68170-0015
3339112133	GAI20SRCF	3B282-12-12	PA68170-0015
3339112143	GAI20SRCFX	3B282-12-12B	PA68170-0020
3339112177	GAI20SRMS	3B282-12-12C	PA68170-0020
3339112180	GAI20SRMSX	3B282-16-16-K	PA68170-0025
3339112207	GAI20ZSM71	3B282-4-4	PA68170-0025
3339112208	GAI20ZSMCF	3B282-4-4B	PA68170-0030
3339112212	GAI20ZSR71	3B282-4-4C	PA68170-0030
3339112214	GAI20ZSRCF	3B282-6-6	PA68170-0040
3339112219	GAI22L3/4NPT71	3B282-6-6B	PA68170-0040
3339112231	GAI22L3/4NPT71X	3B282-6-6C	PA68170-0070
3339112233	GAI22L3/4NPTCF	3B282-8-8	PA68170-0070
3339112238	GAI22L3/4NPTCFX	3B282-8-8B	PA68180-0015
3339112243	GAI22L3/4NPTDPR71CF	3B282-8-8C	PA68180-0015
3339112250	GAI22LM71	3B3S15L4	PA68180-0020
3339112274	GAI22LMCF	3B3S15P2	PA68180-0020
3339112281	GAI22LMCFX	3B3S15P4	PA68180-0025
3339112290	GAI22LR1/271	3B3S15P4-BO	PA68180-0025
3339112291	GAI22LR1/2CF	3B3S15P6	PA68180-0030
3339112292	GAI22LR1CF	3B3S15P8	PA68180-0030
3339112294	GAI22LR1CFX	3B3S20H4	PA68180-0040
3339112296	GAI22LR71	3B3S20M4	PA68180-0040
3339112302	GAI22LR71X	3B3S20M6	PA68180-0050
3339112303	GAI22LRCF	3B3S20M9	PA68180-0050
3339112322	GAI22LRCFX	3B6S15M12	PA68180-0060
3339112325	GAI22LRDPR71CF	3B6S15M6	PA68180-0060
3339112331	GAI22LRMS	3B6S15M9	PA68180-0070
3339112332	GAI22LRMSX	3B6S15P8	PA68180-0070
3339112333	GAI22ZLMCF	3BC3-316	PA68190-0025
3339112348	GAI22ZLR71	3BD3S15L4	PA68190-0025
3339112357	GAI22ZLRCF	3BD3S20H4	PA68190-0030
3339112361	GAI22ZLRVITCF	3BD6S15M12	PA68190-0030
3339112363	GAI25S1NPT71	3BD6S15M9-AO	PA68190-0040
3339112366	GAI25S1NPT71X	3BD6S15P8	PA68190-0040
3339112371	GAI25S1NPTCF	3BD82-6-6B	PA68190-0050
3339112373	GAI25S1NPTCFX	3BE82-4-4B	PA68190-0050
3339112374	GAI25SM71	3BE82-6-6B	PA68190-0070
3339112375	GAI25SMCF	3BE82-8-8B	PA68190-0070
3339112378	GAI25SMCFX	3BF3-316	PA68190-0100
3339112382	GAI25SR3/4CF	3BLEN3-316	PA68190-0100
3339112387	GAI25SR71	3BLP3-316	PA68190-0120
3339112388	GAI25SR71X	3C082-20-12BK	PA68190-0120

3339112393	GAI25SRCF	3C32F-F5	PA68220-0025
3339112395	GAI25SRCFX	3C382-10-4	PA68220-0025
3339112396	GAI25SRMS	3C382-10-4B	PA68230-0003
3339112399	GAI25ZSM71	3C382-10-4BK	PA68230-0003
3339112400	GAI25ZSR71	3C382-10-4C	PA68280-0005
3339112401	GAI25ZSRCF	3C382-10-6	PA68280-0005
3339112408	GAI28L1NPT71	3C382-10-6B	PA68280-0010
3339112419	GAI28L1NPT71X	3C382-10-6BK	PA68280-0010
3339112420	GAI28L1NPTCF	3C382-10-6C	PA68280-0020
3339112427	GAI28L1NPTCFX	3C382-12-12	PA68280-0020
3339112430	GAI28LM71	3C382-12-6	PA68280-0040
3339112433	GAI28LM71X	3C382-12-6B	PA68280-0040
3339112435	GAI28LMCF	3C382-12-6BK	PA68290-0005
3339112437	GAI28LMCFX	3C382-12-6C	PA68290-0005
3339112438	GAI28LR3/4CFX	3C382-12-8	PA68290-0010
3339112448	GAI28LR71	3C382-15-10	PA68290-0010
3339112449	GAI28LR71X	3C382-15-8	PA68290-0016
3339112451	GAI28LRCF	3C382-15-8B	PA68290-0016
3339112452	GAI28LRCFX	3C382-15-8BK	PA68290-0020
3339112455	GAI28LRDPR71CF	3C382-15-8C	PA68290-0020
3339112459	GAI28LRMS	3C382-18-10	PA68290-0025
3339112460	GAI28LRMSX	3C382-18-10BK	PA68290-0025
3339112471	GAI28ZLM71	3C382-18-10C	PA68290-0030
3339112477	GAI28ZLR71	3C382-18-12	PA68290-0030
3339112484	GAI28ZLRCF	3C382-22-12	PA68290-0040
3339112485	GAI28ZLRSSACF	3C382-22-12B	PA68290-0040
3339112488	GAI28ZLRVITCF	3C382-22-12BK	PA68290-0055
3339112492	GAI28ZLRVITSSACF	3C382-22-12C	PA68290-0055
3339114003	GAI30S11/4NPT71X	3C382-28-16BK	PA68290-0085
3339114004	GAI30SMCF	3C382-28-16C-K	PA68290-0085
3339115003	GAI30SMCFX	3C382-28-16-K	PA68290-0140
3339120022	GAI30SR71	3C382-6-4	PA68290-0140
3339120025	GAI30SR71X	3C382-6-4B	PA68300-0040
3339120073	GAI30SRCF	3C382-6-4BK	PA68300-0040
3339120095	GAI30SRCFX	3C382-6-4C	PA68300-0050
3339120096	GAI30SRDPR71CF	3C382-8-4	PA68300-0050
3339120097	GAI30ZSR71	3C382-8-4B	PA68300-0060
3339120102	GAI30ZSRCF	3C382-8-4BK	PA68300-0060
3339120103	GAI35L11/4NPT71	3C382-8-4C	PA68300-0080
3339120112	GAI35L11/4NPT71X	3C482-10-6	PA68300-0080
3339121019	GAI35L11/4NPTCF	3C482-10-6B	PA68310-0005
3339121053	GAI35LM71	3C482-10-6C	PA68310-0005
3339121061	GAI35LM71X	3C482-12-6	PA68310-0015
3339121073	GAI35LMCF	3C482-12-6C	PA68310-0015
3339121074	GAI35LMCFX	3C482-15-10-BK	PA68310-0025
3339121083	GAI35LR71	3C482-15-8	PA68310-0025
3339121086	GAI35LR71X	3C482-15-8B	PA68310-0030
3339121089	GAI35LRCF	3C482-18-10	PA68310-0030
3339121092	GAI35LRCFX	3C482-22-12	PA68310-0040
3339121093	GAI35LRMS	3C482-22-12B	PA68310-0040
3339121096	GAI35LRMSX	3C482-28-16-K	PA68310-0050
3339121101	GAI35ZLR71	3C482-6-4	PA68310-0050
3339121111	GAI35ZLRCF	3C482-8-4	PA68310-0080

3339121115	GAI38S11/2NPT71X	3C482-8-4C	PA68310-0080
3339121119	GAI38SMCF	3C582-10-4	PA68310-0090
3339121121	GAI38SR71	3C582-10-4BK	PA68310-0090
3339121129	GAI38SR71X	3C582-10-4C	PA68310-0100
3339121132	GAI38SRCF	3C582-10-6	PA68310-0100
3339121133	GAI38SRCFX	3C582-10-6B	PA68320-0005
3339121135	GAI38ZSM71	3C582-10-6C	PA68320-0005
3339121137	GAI38ZSRCF	3C582-12-6	PA68330-0015
3339121151	GAI42L11/2NPT71	3C582-12-6B	PA68330-0015
3339121163	GAI42L11/2NPT71X	3C582-12-6C	PA68330-0025
3339121176	GAI42L11/2NPTCF	3C582-15-8	PA68330-0025
3339121177	GAI42L11/2NPTCFX	3C582-15-8B	PA68350-0025
3339121195	GAI42LMCF	3C582-15-8C	PA68350-0025
3339121198	GAI42LMCFX	3C582-18-10	PA68360-0005
3339121203	GAI42LR71	3C582-18-10B	PA68360-0005
3339121206	GAI42LR71X	3C582-18-10C	PA68370-0010
3339121207	GAI42LRCF	3C582-22-12	PA68370-0010
3339121208	GAI42LRCFX	3C582-22-12B	PA68420-0050
3339121211	GAI42LRDPR71CF	3C582-22-12C	PA68420-0050
3339121218	GAI42ZLMCF	3C582-28-16-K	PAB.1730.10.10
3339121220	GAI42ZLR71	3C582-6-4	PAB.1730.10.5
3339121224	GAI42ZLRCF	3C582-6-4B	PAB.1730.40.10
3339121225	GARFGL050-000	3C582-6-4C	PAB.1730.40.5
3339121231	GARFGL050-070	3C582-8-4	PACKGA20VDHB06SX
3339121232	GARFGL050-085	3C582-8-4B	PACKGA24VDHA06SX
3339121233	GARFGL050-100	3C582-8-4C	PADA1007/A-A/B-B/V
3339121235	GARFGL100-000	3CA82-10-4	PADA1007/A-B/B-A
3339121236	GARFGL100-020	3CA82-10-6	PADA1007-AA-BB
3339121239	GARFGL100-030	3CA82-10-6B	PAE-ZXM13240
3339121247	GARFGL100-060	3CA82-12-6	PAE-ZXM13240
3339121250	GARFGL100-090	3CA82-12-6B	PAE-ZXM15063
3339121252	GARFGL100-300	3CA82-15-10B	PAE-ZXM15063
3339121253	GARFGL100-550	3CA82-15-8	PAE-ZXM180100
3339121254	GARFGL100-700	3CA82-15-8B	PAE-ZXM180100
3339121256	GARFGL150-000	3CA82-18-10	PAFG080/90G34CFM
3339121258	GARFGL150-015	3CA82-22-12	PAFG080/90G38CF
3339121264	GARFGL150-030	3CA82-28-16BK	PAFG080/90G38CFM
3339121270	GARFGL150-045	3CA82-6-4	PAFG080/90GCFM
3339121279	GARFGL150-050	3CA82-6-4B	PAFG080/90L-ACF
3339121281	GARFGL150-080	3CA82-8-4	PAFG080/90M12SCF
3339121284	GARFGL150-100	3CA82-8-4B	PAFG080/90M12SCFM
3339121285	GARFGL150-230	3CE82-10-6	PAFG080/90M12SOMDCFM
3339121289	GARFGL200-000	3CE82-12-6	PAFG080/90M12ZSCFM
3339121291	GARFGL200-010	3CE82-15-8	PAFG080/90M15LCF
3339121301	GARFGL200-045	3CE82-22-12	PAFG080/90M15LCFM
3339121303	GARFGL200-060	3CF82-10-4	PAFG080/90M15LOMDCFM
3339121304	GARFGL200-065	3CF82-10-6	PAFG080/90M15ZLCFM
3339121309	GARFGL200-080	3CF82-10-6B	PAFG080/90M16SCF
3339121311	GARFGL200-110	3CF82-12-6	PAFG080/90M16SCFM
3339121313	GARFGL200-140	3CF82-15-8	PAFG080/90M16SOMDCFM
3339122028	GARFGL200-150	3CF82-15-8C	PAFG080/90M16ZSCFM
3339122052	GARFGL250-000	3CF82-18-10	PAFG080/90X-ACFM
3339122054	GARFGL250-005	3CF82-22-12	PAFG080/90X-BCF

3339122058	GARFGL250-030	3CF82-6-4	PAFG080/90X-BCFM
3339122063	GARFGL250-050	3CF82-8-4	PAFG080/90X-CCFM
3339122074	GARFGL250-055	3D082-10-6	PAFG080G34CFM
3339122083	GARFGL250-075	3D082-10-6B	PAFG080G38CFM
3339122098	GARFGL250-730	3D082-10-6BK	PAFG080GCF
3339122105	GARFGL300-000	3D082-10-6C	PAFG080GCFM
3339122109	GARFGL300-030	3D082-12-6	PAFG080L-ACF
3339122111	GARFGL300-050	3D082-12-6C	PAFG080L-ACFM
3339122112	GARFGL300-070	3D082-15-8	PAFG080L-BCFM
3339122113	GARFGL300-345	3D082-15-8B	PAFG080L-CCFM
3339122117	GARFGL300-680	3D082-15-8BK	PAFG080X-ACFM
3339122118	GARFGL300-730	3D082-15-8C	PAFG080X-BCFM
3339122120	GARFGL350-000	3D082-18-10	PAFG080X-CCFM
3339122122	GARFGL350-100	3D082-18-10C	PAFG100/90G12CFM
3339122123	GARFGL350-1230	3D082-18-8C	PAFG100/90G1CFM
3339122127	GARFGL350-150	3D082-22-12	PAFG100/90GCF
3339122137	GARFGL350-350	3D082-22-12B	PAFG100/90GCFM
3339122141	GARFGL350-410	3D082-22-12BK	PAFG100/90GSSM
3339122144	GARFGL350-730	3D082-6-4	PAFG100/90L-ACF
3339122147	GARFGL350-745	3D082-8-4	PAFG100/90M16SCF
3339122148	GARFGL350-990	3D982-12-12	PAFG100/90M16SCFM
3339122150	GARFGL400-000	3D982-12-12B	PAFG100/90M16SOMDCFM
3339122151	GARFGL400-045	3D982-12-12C	PAFG100/90M16ZSCFM
3339122155	GARFGL400-165	3D982-2-4	PAFG100/90M20SCF
3339122156	GARFGL400-350	3D982-2-4B	PAFG100/90M20SCFM
3339122164	GARFGL400-770	3D982-2-4C	PAFG100/90M20SOMDCFM
3339122169	GARFGL400-900	3D982-4-4	PAFG100/90M20ZSCFM
3339122175	GARFGL450-000	3D982-4-4B	PAFG100/90M22LCF
3339122180	GARFGL450-010	3D982-4-4C	PAFG100/90M22LCFM
3339122183	GARFGL450-095	3D982-4-6	PAFG100/90M22LOMDCFM
3339122185	GARFGL450-150	3D982-4-6B	PAFG100/90M22ZLCFM
3339122186	GARFGL450-360	3D982-4-6C	PAFG100/90X-ACFM
3339122187	GARFGL500-625	3D982-6-6	PAFG100/90X-BCF
3339122194	GARFGL550-920	3D982-6-6B	PAFG100/90X-BCFM
3339122200	GARN08LCF	3D982-6-6BK	PAFG100/90X-CCFM
3339124002	GARN12LCF	3D982-6-6C	PAFG100G12CFM
3339130006	GARN15LCF	3D982-8-10	PAFG100G1CFM
3339130015	GARN22LCF	3D982-8-10C	PAFG100GCF
3339130016	GAUGE-AM10	3D982-8-8	PAFG100GCFM
3339130017	GAUGE-AM16	3D982-8-8B	PAFG100L-ACF
3339131011	GAUGE-AM20	3D982-8-8C	PAFG100L-ACFM
3339131014	GAUGE-AM25	3DAB-10-04	PAFG100L-BCFM
3339131018	GAUGE-AM6	3DAB-12-05	PAFG100X-ACFM
3339131023	GAUGE-AM8	3DAB-8-025	PAFG100X-BCFM
3339131032	GBK11/02	3DE82-10-4	PAFG100X-CCF
3339131037	GBK11/04	3DE82-8-4	PAFG100X-CCFM
3339131038	GBK17/03	3EE3-316	PAFG102/90G114CFM
3339131041	GBK17/04	3ET3-316	PAFG102/90G34CFM
3339131048	GBK17/05	3EV10V10	PAFG102/90G34CFU
3339131050	GBK17/06	3EV10V10	PAFG102/90GCF
3339131053	GBK17/07	3EV10V20-110	PAFG102/90GCFM
3339131056	GBK17/08	3EV10V20-110	PAFG102/90L-ACF
3339131060	GBK17/09	3EV10V20-110L5	PAFG102/90L-BCF

3339131061	GBK17/10	3EV10V20-110L5	PAFG102/90M20SCF
3339131062	GBK17/12	3EV10V20-230	PAFG102/90M20SCFM
3339131064	GBK23/02	3EV10V20-230	PAFG102/90M20SOMDCFM
3339131065	GBK23/03	3EV10V20-230L5	PAFG102/90M20ZSCFM
3339131066	GBK23/04	3EV10V20-230L5	PAFG102/90M25SCF
3339132013	GBK23/06	3EV10V20-24	PAFG102/90M25SCFM
3339132018	GBK23/09	3EV10V20-24	PAFG102/90M25SOMDCFM
3339132021	GBK23/10	3EV10V20-24L5	PAFG102/90M25ZSCFM
3339132023	GBK24/01	3EV10V20-24L5	PAFG102/90M28LCF
3339132025	GBK24/02	3EV10V20-48	PAFG102/90M28LCFM
3339132026	GBK24/03	3EV10V20-48	PAFG102/90M28LOMDCFM
3339132031	GBK24/04	3EV290V10	PAFG102/90M28ZLCFM
3339142002	GBK24/05	3EV290V10	PAFG102/90X-ACFM
3339520027	GBK24/06	3EV290V20-110	PAFG102/90X-BCFM
3339520054	GBK24/07	3EV290V20-110	PAFG102G114CFM
3339520056	GBK24/08	3EV290V20-110L5	PAFG102G34CFM
3339520065	GBK24/09	3EV290V20-110L5	PAFG102GCF
3339520075	GBK24/10	3EV290V20-230	PAFG102GCFM
3339521037	GBK24/11	3EV290V20-230	PAFG102L-ACF
3339521046	GBK24/12	3EV290V20-230L5	PAFG102L-ACFM
3339521048	GBK24/13	3EV290V20-230L5	PAFG102L-BCF
3339521050	GBK24/14	3EV290V20-24	PAFG102L-BCFM
3339521056	GBK24/21	3EV290V20-24	PAFG102X-ACFM
3339521059	GBK24/24	3EV290V20-24L5	PAFG102X-BCF
3339521060	GBK32/04	3EV290V20-24L5	PAFG102X-BCFM
3339521086	GBK32/05	3F4C80	PAFG102X-BCFU
3339521091	GBK32/07	3F4C80	PAFG102X-CCF
3339521093	GBK37/02	3FF3-316	PAFG102X-CCFM
3339521120	GBK37/03	3FF82-10-6B	PAFG104/90G112CFM
3339521121	GBK37/07	3FF82-12-6B	PAFG104/90G1CFM
3339521129	GBK37/08	3FF82-14-8B	PAFG104/90GCF
3339521135	GBK37/10	3FF82-16-8B	PAFG104/90GCFM
3339521136	GBK38/02	3FF82-18-10B	PAFG104/90L-ACF
3339521137	GBK38/03	3FF82-22-12B	PAFG104/90M25SCF
3339521139	GBK38/05	3FF82-6-4B	PAFG104/90M25SCFM
3339521140	GBK38/07	3FF82-8-4B	PAFG104/90M25SOMDCFM
3339521141	GBK38/08	3FSC2N-316	PAFG104/90M25ZSCFM
3339521148	GBK38/10	3J7352/B400	PAFG104/90M30SCF
3339521149	GBK40/02	3JC82-12-12	PAFG104/90M30SCFM
3339521155	GBK40/04	3JC82-4-4	PAFG104/90M30SOMDCFM
3339521158	GBK40/07	3JC82-6-6-SM	PAFG104/90M30ZSCFM
3339521159	GBK40/08	3JC82-8-10-SM	PAFG104/90M35LCF
3339521161	GBK52/03	3JC82-8-6-SM	PAFG104/90M35LCFM
3339521162	GBK53/06	3JC82-8-8-SM	PAFG104/90M35LOMDCFM
3339521168	GBK53/08	3K3121N	PAFG104/90M35ZLCFM
3339521169	GBK53/09	3K3121N	PAFG104/90X-ACFM
3339521170	GBK53/10	3KRAW17IW17	PAFG104/90X-BCFM
3339521173	GBMB10-1/4	3KRAW17IW17	PAFG104/90X-CCFM
3339521175	GBMB12-1/2	3MA2N-316	PAFG104G112CFM
3339521180	GBMB12-3/8	3MA4N-316	PAFG104G1CF
3339521181	GBMB6-1/4	3MBT2N-316	PAFG104G1CFM
3339521183	GBMB6-1/8	3MSC2N-316	PAFG104GCF
3339521185	GBRAB10-1/2	3MSC2N-B	PAFG104GCFM

3339521186	GBZ 10-1/2K-SS	3MSC4N-316	PAFG104GSSM
3339521188	GBZ 10-1/2-SS	3MSEL2N-316	PAFG104L-ACF
3339521190	GBZ 10-1/4K-SS	3MSEL4N-316	PAFG104L-ACFM
3339521192	GBZ 10-1/4-SS	3MTC2N-316	PAFG104L-BCFM
3339521196	GBZ 10-1/8K-SS	3MTC2N-M	PAFG104X-ACF
3339521201	GBZ 10-3/8K-SS	3MTC4N-316	PAFG104X-ACFM
3339521209	GBZ 10-3/8-SS	3NM82-12-12B	PAFG104X-BCF
3339521210	GBZ 12-1/2K-SS	3NM82-6-8B	PAFG104X-BCFM
3339521212	GBZ 12-1/2-SS	3NM82-8-8B	PAFG104X-CCF
3339521213	GBZ 12-1/4K-SS	3NU3-316	PAFG104X-CCFM
3339521214	GBZ 12-1/4-SS	3NUK3-316	PAFG106/90G114CFM
3339521215	GBZ 12-3/8K-SS	3-P-1024X	PAFG106/90GCFM
3339521216	GBZ 12-3/8-SS	3-P-1025	PAFG106/90L-ACF
3339521217	GBZ 16-1/2-SS	3-P-1026	PAFG106/90M35LCF
3339521218	GBZ 20-1/2-SS	3-P-1049	PAFG106/90M35LCFM
3339521222	GBZ 20-3/4-SS	3-P-202	PAFG106/90M35LOMDCFM
3339521234	GBZ 3-1/4-SS	3-P-282	PAFG106/90M35ZLCFM
3339521236	GBZ 3-1/8-SS	3-P-679	PAFG106/90M38SCF
3339521237	GBZ 6-1/2K-SS	3-P-726	PAFG106/90M38SCFM
3339521245	GBZ 6-1/2-SS	3-P-756	PAFG106/90M38SOMDCFM
3339521246	GBZ 6-1/4K-SS	3-P-758	PAFG106/90M38ZSCFM
3339521249	GBZ 6-1/4-SS	3-P-766	PAFG106/90M42LCF
3339521252	GBZ 6-1/8K-SS	3-P-768	PAFG106/90M42LCFM
3339521263	GBZ 6-1/8-SS	3-P-787	PAFG106/90M42LOMDCFM
3339522025	GBZ 6-3/8K-SS	3-P-825	PAFG106/90M42ZLCFM
3339522030	GBZ 6-3/8-SS	3-P-831	PAFG106/90X-ACFM
3339522040	GBZ 8-1/2K-SS	3-P-852	PAFG106/90X-BCF
3339522044	GBZ 8-1/2-SS	3-P-853	PAFG106/90X-BCFM
3339522052	GBZ 8-1/4K-SS	3-P-855	PAFG106G114CF
3339522056	GBZ 8-1/4-SS	3-P-872	PAFG106G114CFM
3339522061	GBZ 8-1/8-SS	3-P-876	PAFG106G2CFM
3339522063	GBZ 8-3/8K-SS	3-P-921X	PAFG106GCF
3339522064	GBZ 8-3/8-SS	3-P-957	PAFG106GCFM
3339522066	GDL-FD12-0080X0A-000-0000	3-P-997	PAFG106L-ACF
3339522067	GDL-FD12-0080X0A-000-0000	3RU1-316	PAFG106L-ACFM
3339522077	GDL-FD12-0140X0A-000-0000	3RU2-316	PAFG106L-BCF
3339522080	GDL-FD12-0140X0A-000-0000	3SC3-316	PAFG106L-BCFM
3339522082	GDL-FD12-0160A2A-010-0000	3TUR1-316	PAFG106X-ACF
3339522084	GDL-FD12-0160A2A-010-0000	3TUR2-316	PAFG106X-ACFM
3339522086	GDL-FD12-0180A1A-000-0000	3TUR4-316	PAFG106X-BCF
3339530005	GDL-FD12-0180A1A-000-0000	3V54D6X4MCH	PAFG106X-BCFM
3339530021	GDL-FD12-0190X0A-000-0000	3V54D6X5MCH	PAFG108G112CF
3339530022	GDL-FD12-0190X0A-000-0000	3VK1	PAFG108G112CFM
3339530028	GDL-FD12-0200A1A-000-0000	3VW82-10-6BK	PAFG108GCF
3339531004	GDL-FD12-0200A1A-000-0000	3YW82-10-6C-R0UND	PAFG108GCFM
3339531018	GDL-FD12-0200A2A-000-0000	3YW82-12-8C-R0UND	PAFG401/90G34CFM
3339531027	GDL-FD12-0200A2A-000-0000	3YW82-18-10C-R0UND	PAFG401/90G38CFM
3339531036	GDL-FD12-0230X0A-000-0000	3YW82-8-4C-R0UND	PAFG401/90GCF
3339531045	GDL-FD12-0230X0A-000-0000	4 ALOK-316-SET	PAFG401/90GCFM
3339531053	GDL-FD12-0250X0A-000-0000	4 ALOK-825-SET	PAFG401/90L-CCF
3339531058	GDL-FD12-0250X0A-000-0000	4 ALOK-B-SET	PAFG401/90M12SCF
3339531060	GDL-FD12-0300L1A-000-0000	4 ALOK-M-SET	PAFG401/90M12SCFM
3339531063	GDL-FD12-0300L1A-000-0000	4 AOEG5-S	PAFG401/90M12SOMDCFM

3339531065	GDL-FD12-0320A1A-000-0000	4 AOEL6-S	PAFG401/90M12ZSCFM
3339531068	GDL-FD12-0320A1A-000-0000	4 AOG5JG5-S	PAFG401/90M14SCF
3339531069	GDL-FD12-0355X0A-000-0000	4 BL-S	PAFG401/90M14SCFM
3339531070	GDL-FD12-0355X0A-000-0000	4 BMP7-SS	PAFG401/90M14SOMDCFM
3339531073	GDL-FD12-0500X0A-000-0000	4 BODY DIE	PAFG401/90M14ZSCFM
3339531075	GDL-FD12-0500X0A-000-0000	4 BTX-B	PAFG401/90M16SCF
3339531083	GDL-FD12-0620X0A-000-0000	4 BTX-S	PAFG401/90M16SCFM
3339531085	GDL-FD12-0620X0A-000-0000	4 BTX-SS	PAFG401/90M16SOMDCFM
3339531091	GDL-FD12-0965X0A-000-0000	4 BU-S	PAFG401/90M16ZSCFM
3339531092	GDL-FD12-0965X0A-000-0000	4 BZ-B	PAFG401/90X-ACFM
3339531096	GDL-FD12-1000L1A-000-0000	4 BZI-SS	PAFG401/90X-BCFM
3339531106	GDL-FD12-1000L1A-000-0000	4 BZP-SS	PAFG401/90X-CCFM
3339532004	GDL-FD12-1000X0A-000-0000	4 BZ-SS	PAFG401G34CF
3339532005	GDL-FD12-1000X0A-000-0000	4 C5BU-S	PAFG401G34CFM
3339532012	GDL-FD12-1032A1A-000-0000	4 C5OLO-S	PAFG401G38CFM
3339532017	GDL-FD12-1032A1A-000-0000	4 C5OX-S	PAFG401GCF
3339532020	GDL-FD15-0100L1A-000-0000	4 C6BU-S	PAFG401GCFM
3339532022	GDL-FD15-0100L1A-000-0000	4 C6LO-S	PAFG401L-ACFM
3339532024	GDL-FD15-0100X0A-000-0000	4 C6LO-S V0894	PAFG401L-BCFM
3339532025	GDL-FD15-0100X0A-000-0000	4 C6X-S	PAFG401L-CCFM
3339532027	GDL-FD15-0120A1A-000-0000	4 C6X-SS	PAFG401X-ACFM
3339532029	GDL-FD15-0120A1A-000-0000	4 CBU-S	PAFG401X-ASSM
3339532034	GDL-FD15-0120K1A-030-0000	4 CBU-SS	PAFG401X-BCFM
3339541013	GDL-FD15-0120K1A-030-0000	4 CC5OX-S	PAFG401X-CCF
3339542002	GDL-FD15-0140X0A-000-0000	4 CCCTX-S	PAFG401X-CCFM
3339542008	GDL-FD15-0140X0A-000-0000	4 CCTX-S	PAFG402/90G12CF
3339542010	GDL-FD15-0150X0A-000-0000	4 CLO-B	PAFG402/90G12CFM
3339542014	GDL-FD15-0150X0A-000-0000	4 CLO-S	PAFG402/90G1CFM
3339542015	GDL-FD15-0170X0A-000-0000	4 CP-625	PAFG402/90GCF
3339542016	GDL-FD15-0170X0A-000-0000	4 CP-B	PAFG402/90GCFM
3339545001	GDL-FD15-0175X0A-000-0000	4 CPI-SS-SET	PAFG402/90L-BCF
3341108700	GDL-FD15-0175X0A-000-0000	4 CP-M	PAFG402/90M16SCF
3341111200	GDL-FD15-0200X0A-000-0000	4 CP-SS	PAFG402/90M16SCFM
3341114200	GDL-FD15-0200X0A-000-0000	4 CP-SSHP	PAFG402/90M16SOMDCFM
3341123200	GDL-FD15-0200X0A-010-0000	4 CTX-B	PAFG402/90M16ZSCFM
3341206200	GDL-FD15-0200X0A-010-0000	4 CTX-S	PAFG402/90M20SCF
3341211900	GDL-FD15-0220X0A-000-0000	4 CW-SS	PAFG402/90M20SCFM
3341214200	GDL-FD15-0220X0A-000-0000	4 DBU-S	PAFG402/90M20SOMDCFM
3341216700	GDL-FD15-0245X0A-000-0000	4 DI FRIT-10MIC-SS	PAFG402/90M20ZSCFM
3341223200	GDL-FD15-0245X0A-000-0000	4 DI FRIT-2MIC-SS	PAFG402/90M22LCF
3341223303	GDL-FD15-0250X0A-000-0000	4 DI FRIT-5MIC-SS	PAFG402/90M22LCFM
3341231200	GDL-FD15-0250X0A-000-0000	4 DTX-S	PAFG402/90M22LOMDCFM
3341231303	GDL-FD15-0270A1A-040-0000	4 DTX-SS	PAFG402/90M22ZLCFM
3341233200	GDL-FD15-0270A1A-040-0000	4 EBU-S	PAFG402/90X-ACFM
3341233300	GDL-FD15-0300A1A-000-0000	4 ELO-S	PAFG402/90X-BCFM
3341500301	GDL-FD15-0300A1A-000-0000	4 ETX-B	PAFG402/90X-CCF
3341727300	GDL-FD15-0300X0A-000-0000	4 ETX-S	PAFG402/90X-CCFM
3341823603	GDL-FD15-0300X0A-000-0000	4 EW-SS	PAFG402G12CF
3341833600	GDL-FD15-0330A1A-000-0000	4 F5BU-S	PAFG402G12CFM
3341910603	GDL-FD15-0330A1A-000-0000	4 F5OHAO-S	PAFG402G1CF
3341912600	GDL-FD15-0330X0A-000-0000	4 F5OLO-S	PAFG402G1CFM
3341917600	GDL-FD15-0330X0A-000-0000	4 F5OLO-S V0894	PAFG402GCF
3341927600	GDL-FD15-0340A1A-000-0000	4 F5OX-S	PAFG402GCFM

3341928601	GDL-FD15-0340A1A-000-0000	4 F65OL-S	PAFG402L-ACF
3342719000	GDL-FD15-0340X0A-000-0000	4 F6X-S	PAFG402L-ACFM
3345041202	GDL-FD15-0340X0A-000-0000	4 FBU-S	PAFG402L-BCFM
3345041203	GDL-FD15-0350A1A-000-0000	4 FBU-SS	PAFG402X-ACF
3345050204	GDL-FD15-0350A1A-000-0000	4 FF5OLO-S	PAFG402X-ACFM
3348107406	GDL-FD15-0350X0A-000-0000	4 FF5OX-S	PAFG402X-BCFM
3348119100	GDL-FD15-0350X0A-000-0000	4 FF5OX-SS	PAFG402X-CCF
3348511100	GDL-FD15-0400X0A-000-0000	4 FLO-S	PAFG402X-CCFM
3349110005	GDL-FD15-0400X0A-000-0000	4 FNL-S	PAFG403/90G114CFM
3349110017	GDL-FD15-0450S1A-000-0000	4 FNMP7-SS	PAFG403/90G34CF
3349110018	GDL-FD15-0450S1A-000-0000	4 FNTX-B	PAFG403/90G34CFM
3349110035	GDL-FD15-0450X0A-000-0000	4 FNTX-S	PAFG403/90GCFM
3349110061	GDL-FD15-0450X0A-000-0000	4 FNTX-SS	PAFG403/90M20SCF
3349110074	GDL-FD15-0500A2A-000-0000	4 FNU-S	PAFG403/90M20SCFM
3349110075	GDL-FD15-0500A2A-000-0000	4 FNZ-B	PAFG403/90M20SOMDCFM
3349110079	GDL-FD15-0500L2A-000-0000	4 FNZ-SS	PAFG403/90M20ZSCFM
3349110092	GDL-FD15-0500L2A-000-0000	4 FX-B	PAFG403/90M25SCF
3349111003	GDL-FD15-0500X0A-000-0000	4 FX-SS	PAFG403/90M25SCFM
3349111004	GDL-FD15-0500X0A-000-0000	4 FX-SSHP	PAFG403/90M25SOMDCFM
3349111006	GDL-FD15-0560X0A-000-0000	4 G5HG5-S	PAFG403/90M25ZSCFM
3349111016	GDL-FD15-0560X0A-000-0000	4 G6X-S	PAFG403/90M28LCF
3349111018	GDL-FD15-0565X0A-000-0000	4 GAP GAUGE	PAFG403/90M28LCFM
3349111024	GDL-FD15-0565X0A-000-0000	4 GBU-S	PAFG403/90M28LOMDCFM
3349111026	GDL-FD15-0580X0A-020-0000	4 GBU-SS	PAFG403/90M28ZLCFM
3349111039	GDL-FD15-0580X0A-020-0000	4 GTX-S	PAFG403/90X-ACFM
3349111044	GDL-FD15-0600X0A-000-0000	4 GW-SS	PAFG403/90X-BCFM
3349111046	GDL-FD15-0600X0A-000-0000	4 HBU-S	PAFG403/90X-CCFM
3349111047	GDL-FD15-0650X0A-000-0000	4 HL6-S	PAFG403G114CFM
3349111052	GDL-FD15-0650X0A-000-0000	4 HLO-S	PAFG403G34CF
3349111053	GDL-FD15-0760K1C-000-0000	4 HP5N-S	PAFG403G34CFM
3349111056	GDL-FD15-0760K1C-000-0000	4 HP5ON-S	PAFG403GCF
3349111058	GDL-FD15-0800X0A-000-0000	4 HP5ON-S E0893	PAFG403GCFM
3349111060	GDL-FD15-0800X0A-000-0000	4 HP5ON-S V0894	PAFG403L-ACFM
3349111061	GDL-FD15-0870X0A-000-0000	4 HP5ON-SS	PAFG403L-BCF
3349111062	GDL-FD15-0870X0A-000-0000	4 HTX-S	PAFG403L-BCFM
3349111066	GDL-FD15-0900X0A-000-0000	4 HTX-S PL CAP	PAFG403X-ACFM
3349111067	GDL-FD15-0900X0A-000-0000	4 HW-SS	PAFG403X-BCFM
3349111068	GDL-FD15-0925X0A-000-0000	4 HX6-S	PAFG403X-CCFM
3349111073	GDL-FD15-0925X0A-000-0000	4 JBU-S	PAFG404/90G112CFM
3349111079	GDL-FD15-1000A1A-000-0000	4 JLO-S	PAFG404/90G1CF
3349111089	GDL-FD15-1000A1A-000-0000	4 JTX-B	PAFG404/90G1CFM
3349111090	GDL-FD15-1000A2A-000-0000	4 JTX-S BP	PAFG404/90GCF
3349111091	GDL-FD15-1000A2A-000-0000	4 JW-SS	PAFG404/90GCFM
3349111092	GDL-FD15-1000A3A-000-0000	4 JX6-S	PAFG404/90M25SCF
3349111093	GDL-FD15-1000A3A-000-0000	4 KBU-S	PAFG404/90M25SCFM
3349111094	GDL-FD15-1000X0A-000-0000	4 KBZ-B	PAFG404/90M25SOMDCFM
3349111097	GDL-FD15-1000X0A-000-0000	4 KBZ-SS	PAFG404/90M25ZSCFM
3349111111	GDL-FD15-1100X0A-000-0000	4 KLO-S	PAFG404/90M30SCF
3349111115	GDL-FD15-1100X0A-000-0000	4 KTX-S	PAFG404/90M30SCFM
3349111142	GDL-FD15-1142X0A-000-0000	4 KTX-SS	PAFG404/90M30SOMDCFM
3349111143	GDL-FD15-1142X0A-000-0000	4 KW-SS	PAFG404/90M30ZSCFM
3349111144	GDL-FD15-1142X0C-000-0000	4 LHTX-S	PAFG404/90M35LCF
3349111145	GDL-FD15-1142X0C-000-0000	4 LOHB3-S	PAFG404/90M35LCFM

3349111146	GDL-FD15-1150X0A-000-0000	4 LOHX6-S	PAFG404/90M35LOMDCFM
3349111147	GDL-FD15-1150X0A-000-0000	4 MDF-SS	PAFG404/90M35ZLCFM
3349111148	GDL-FD15-1200X0A-000-0000	4 MPBF-SS	PAFG404/90X-ACF
3349111149	GDL-FD15-1200X0A-000-0000	4 MPFF-SS	PAFG404/90X-ACFM
3349111151	GDL-FD15-1240X0A-000-0000	4 MTX-S	PAFG404/90X-BCFM
3349111152	GDL-FD15-1240X0A-000-0000	4 NUT DIE	PAFG404/90X-CCFM
3349111153	GDL-FD15-1370X0A-000-0000	4 OBU-S	PAFG404G112CFM
3349111154	GDL-FD15-1370X0A-000-0000	4 OTX-S	PAFG404G1CF
3349111155	GDL-FD15-1370X0C-000-0000	4 P5N-S	PAFG404G1CFM
3349111156	GDL-FD15-1370X0C-000-0000	4 P5ON-S	PAFG404GCF
3349111157	GDL-FD15-1370X0C-055-0000	4 P5ON-S E0540	PAFG404GCFM
3349111171	GDL-FD15-1370X0C-055-0000	4 P5ON-S V0894	PAFG404L-ACF
3349111172	GDL-FD15-1550X0A-000-0000	4 PANEL NUT-SS	PAFG404L-ACFM
3349111173	GDL-FD15-1550X0A-000-0000	4 PH-625NC	PAFG404L-BCFM
3349111174	GDL-FD15-1600L2A-000-0000	4 PH-6MO	PAFG404X-ACFM
3349111175	GDL-FD15-1600L2A-000-0000	4 PH-6MO-NC	PAFG404X-BCF
3349111176	GDL-FD15-1600X0A-000-0000	4 PH-825	PAFG404X-BCFM
3349111177	GDL-FD15-1600X0A-000-0000	4 PH-B	PAFG404X-CCFM
3349111178	GDL-FD15-1700X0A-000-0000	4 PHH-6MO	PAFG405/90G114CF
3349111179	GDL-FD15-1700X0A-000-0000	4 PHH-825	PAFG405/90G114CFM
3349111180	GDL-FD15-1800X0A-000-0000	4 PHH-B	PAFG405/90GCF
3349111182	GDL-FD15-1800X0A-000-0000	4 PH-HC	PAFG405/90GCFM
3349111183	GDL-FD15-2000X0A-000-0000	4 PHH-M	PAFG405/90M35LCF
3349111184	GDL-FD15-2000X0A-000-0000	4 PHH-SS	PAFG405/90M35LCFM
3349111185	GDL-FD15-2000X0A-000-0282	4 PH-M	PAFG405/90M35LOMDCFM
3349111186	GDL-FD15-2000X0A-000-0282	4 PH-SS	PAFG405/90M35ZLCFM
3349111187	GDL-FD15-2200X0A-000-0000	4 PH-SSHP	PAFG405/90M38SCF
3349111188	GDL-FD15-2200X0A-000-0000	4 PH-TI	PAFG405/90M38SCFM
3349111189	GDL-FD15-2500X0A-000-0000	4 PNBMP7-SS	PAFG405/90M38SOMDCFM
3349111190	GDL-FD15-2500X0A-000-0000	4 PNBZ-B	PAFG405/90M38ZSCFM
3349111191	GDL-FD15-3000X0A-000-0000	4 PNBZ-SS	PAFG405/90M42LCF
3349111192	GDL-FD15-3000X0A-000-0000	4 PNLO-S	PAFG405/90M42LCFM
3349111193	GDL-FD15-3280X0A-000-0000	4 PNTX-SS	PAFG405/90M42LOMDCFM
3349111194	GDL-FD15-3280X0A-000-0000	4 PNU-S	PAFG405/90M42ZLCFM
3349111195	GDL-FD15-4000X0A-000-0000	4 R5OLO-S	PAFG405/90X-ACF
3349111207	GDL-FD15-4000X0A-000-0000	4 R5OX-S	PAFG405/90X-ACFM
3349111236	GDL-FD20-0170X0A-000-0000	4 R5OX-SS	PAFG405/90X-BCFM
3349111238	GDL-FD20-0170X0A-000-0000	4 R6BU-S	PAFG405G114CF
3349111239	GDL-FD20-0180X0A-000-0000	4 R6LO-S	PAFG405G114CFM
3349111242	GDL-FD20-0180X0A-000-0000	4 R6LO-S PLUG	PAFG405GCF
3349111252	GDL-FD20-0200X0A-000-0000	4 R6X-S	PAFG405GCFM
3349111256	GDL-FD20-0200X0A-000-0000	4 R6X-S PL CAP PLUG	PAFG405L-ACFM
3349111263	GDL-FD20-0220A1A-020-0000	4 R6X-SS	PAFG405L-BCFM
3349111277	GDL-FD20-0220A1A-020-0000	4 RTX-S	PAFG405X-ACF
3349111278	GDL-FD20-0260X0A-000-0000	4 RTX-SS	PAFG405X-ACFM
3349111279	GDL-FD20-0260X0A-000-0000	4 S5OLO-S	PAFG405X-BCF
3349111280	GDL-FD20-0300X0A-000-0000	4 S5OX-S	PAFG405X-BCFM
3349111281	GDL-FD20-0300X0A-000-0000	4 S5OX-SS	PAFS080/90BS
3349111290	GDL-FD20-0304X0A-000-0000	4 S6BU-S	PAFS080/90BSM
3349111291	GDL-FD20-0304X0A-000-0000	4 S6LO-S	PAFS080/90BSS
3349111292	GDL-FD20-0400A1A-000-0000	4 S6X-S	PAFS080/90BSU
3349111293	GDL-FD20-0400A1A-000-0000	4 S6X-S PL CAP PLUG	PAFS080/90S21.6S
3349111294	GDL-FD20-0400X0A-000-0000	4 S6X-SS	PAFS080/90S21.6SM

3349111295	GDL-FD20-0400X0A-000-0000	4 SBR	PAFS080/90S21.6SS
3349111296	GDL-FD20-0460X0A-000-0000	4 STX-S	PAFS080/90S21.6SSM
3349111297	GDL-FD20-0460X0A-000-0000	4 TIZ .125-B	PAFS080/90S21.6SU
3349111299	GDL-FD20-0500A1A-000-0000	4 TIZ .125-SS	PAFS080BNBRSSM
3349111313	GDL-FD20-0500A1A-000-0000	4 TIZ .170-B	PAFS080BS
3349111315	GDL-FD20-0500X0A-000-0000	4 TIZ .170-SS	PAFS080BSM
3349111316	GDL-FD20-0500X0A-000-0000	4 TIZ .188-B	PAFS080BSS
3349111317	GDL-FD20-0600X0A-000-0000	4 TIZ .188-SS	PAFS080BSSM
3349111318	GDL-FD20-0600X0A-000-0000	4 TL-S	PAFS080BSU
3349111322	GDL-FD20-0648X0A-000-0000	4 TPL-S	PAFS080MAS
3349111325	GDL-FD20-0648X0A-000-0000	4 TPL-SS	PAFS080MASM
3349111328	GDL-FD20-0700X0A-000-0000	4 TU-S	PAFS080MASU
3349111329	GDL-FD20-0700X0A-000-0000	4 TX-B	PAFS080MBS
3349111330	GDL-FD20-0750X0A-000-0000	4 TX-S	PAFS080MBSM
3349111331	GDL-FD20-0750X0A-000-0000	4 TX-S BP	PAFS080MBSU
3349111332	GDL-FD20-0800X0A-000-0000	4 TX-SS	PAFS080S17.5NBRSSM
3349111333	GDL-FD20-0800X0A-000-0000	4 TZ-B	PAFS080S17.5S
3349111334	GDL-FD20-0820X0A-000-0000	4 TZ-SS	PAFS080S17.5SM
3349111335	GDL-FD20-0820X0A-000-0000	4 TZ-T	PAFS080S17.5SS
3349111336	GDL-FD20-0900A2A-000-0000	4 TZ-ZY	PAFS080S17.5SSM
3349111337	GDL-FD20-0900A2A-000-0000	4 V5BU-S	PAFS080S17.5SU
3349111338	GDL-FD20-0900X0A-000-0000	4 V5OLO-S	PAFS080S21.6NBRSSM
3349111339	GDL-FD20-0900X0A-000-0000	4 V5OX-S	PAFS080S21.6S
3349111341	GDL-FD20-0950X0A-025-0000	4 V5OX-SS	PAFS080S21.6SM
3349111342	GDL-FD20-0950X0A-025-0000	4 V6LO-S	PAFS080S21.6SS
3349111343	GDL-FD20-0998X0A-000-0000	4 V6X-S	PAFS080S21.6SSM
3349111344	GDL-FD20-0998X0A-000-0000	4 V6X-S PL CAP PLUG	PAFS080S21.6SU
3349111345	GDL-FD20-1000A2A-000-0000	4 V6X-SS	PAFS080UAS
3349111346	GDL-FD20-1000A2A-000-0000	4 VBU-S	PAFS080UASM
3349111347	GDL-FD20-1000S2A-000-0000	4 VTX-S	PAFS080UASU
3349111349	GDL-FD20-1000S2A-000-0000	4 VTX-S PL CAP	PAFS100/90BNBRSSM
3349111350	GDL-FD20-1000X0A-000-0000	4 VTX-SS	PAFS100/90BS
3349111351	GDL-FD20-1000X0A-000-0000	4 WBU-S	PAFS100/90BSM
3349111352	GDL-FD20-1300X0A-000-0000	4 WELO-S	PAFS100/90BSS
3349111353	GDL-FD20-1300X0A-000-0000	4 WELO-WLNL-S	PAFS100/90BSSM
3349111356	GDL-FD20-1500A2C-000-0000	4 WETX-S	PAFS100/90BSU
3349111357	GDL-FD20-1500A2C-000-0000	4 WETX-WLN-B	PAFS100/90S27.2S
3349111358	GDL-FD20-1500X0A-000-0000	4 WETX-WLN-S	PAFS100/90S27.2SM
3349111359	GDL-FD20-1500X0A-000-0000	4 WETX-WLN-SS	PAFS100/90S27.2SS
3349111360	GDL-FD20-1600A1A-000-0000	4 WGTX-S	PAFS100/90S27.2SSM
3349111361	GDL-FD20-1600A1A-000-0000	4 WGTX-WLN-S	PAFS100/90S27.2SU
3349111362	GDL-FD20-1600X0A-000-0000	4 WJJLO-S	PAFS100BNBRSSM
3349111363	GDL-FD20-1600X0A-000-0000	4 WJJTX-WLN-S	PAFS100BS
3349111364	GDL-FD20-2000X0A-000-0000	4 WJTX-WLN-S	PAFS100BSM
3349111365	GDL-FD20-2000X0A-000-0000	4 WJTX-WLN-SS	PAFS100BSS
3349111367	GDL-FD20-2400X0A-000-0000	4 WLNL-S	PAFS100BSSM
3349111378	GDL-FD20-2400X0A-000-0000	4 WLN-S	PAFS100BSU
3349111381	GDL-FD20-2426X0A-000-0000	4 WLO-S	PAFS100MAS
3349111384	GDL-FD20-2426X0A-000-0000	4 WLO-WLNL-S	PAFS100MASM
3349111385	GDL-FD25-0200A1A-000-0000	4 WLZ-SS	PAFS100MASU
3349111386	GDL-FD25-0200A1A-000-0000	4 WNLO-S	PAFS100MBS
3349111387	GDL-FD25-0200X0A-000-0000	4 WNTX-WLN-S	PAFS100MBSM
3349111389	GDL-FD25-0200X0A-000-0000	4 XHL6-S	PAFS100MBSU

3349111390	GDL-FD25-0240X0A-000-0000	4 XHLO-S	PAFS100S27.2NBRSSM
3349111391	GDL-FD25-0240X0A-000-0000	400-000013	PAFS100S27.2S
3349111392	GDL-FD25-0250X0A-000-0000	400-000017	PAFS100S27.2SM
3349111393	GDL-FD25-0250X0A-000-0000	400-000029	PAFS100S27.2SS
3349111394	GDL-FD25-0275X0A-000-0000	400-000030	PAFS100S27.2SSM
3349111395	GDL-FD25-0275X0A-000-0000	400-000033	PAFS100S27.2SU
3349111396	GDL-FD25-0275X0A-025-0000	400-000034	PAFS100UAS
3349111397	GDL-FD25-0275X0A-025-0000	400-000038	PAFS100UASM
3349111398	GDL-FD25-0300X0A-000-0000	400-000061	PAFS100UASU
3349111400	GDL-FD25-0300X0A-000-0000	400-000090	PAFS100UBS
3349111401	GDL-FD25-0300X0A-030-0000	400-000100	PAFS100UBSM
3349111403	GDL-FD25-0300X0A-030-0000	400-005004	PAFS100UBSU
3349111404	GDL-FE12-0230X0A-000-0000	400-005009	PAFS102/90BNBRSSM
3349111411	GDL-FE12-0230X0A-000-0000	400-010004	PAFS102/90BS
3349111412	GDS06	400-010010	PAFS102/90BSM
3349111415	GDS10	400-010120	PAFS102/90BSS
3349111417	GDS12	400-010200	PAFS102/90BSSM
3349111420	GDS14	400-010205	PAFS102/90BSU
3349111423	GDS18	400-010214	PAFS102/90S34.1S
3349111424	GDS28	400-010260	PAFS102/90S34.1SM
3349111425	GDS35	400-010280	PAFS102/90S34.1SS
3349111430	GDW	400-010290	PAFS102/90S34.1SSM
3349111433	GE04LL1/8NPT71	400-010292	PAFS102/90S34.1SU
3349111434	GE04LL1/8NPT71X	4000-40-00100-0000-000000	PAFS102B31BSM
3349111436	GE04LL1/8NPTCF	4000-40-00100-0000-000000	PAFS102BNBRSSM
3349111439	GE04LL1/8NPTCFX	4000-40-00125-0000-000000	PAFS102BS
3349111445	GE04LLM10X1BCF	4000-40-00125-0000-000000	PAFS102BSM
3349111446	GE04LLM10X1KEGCF	4000-40-00150-0000-000000	PAFS102BSS
3349111448	GE04LLM10X1KEGCFX	4000-40-00150-0000-000000	PAFS102BSSM
3349111452	GE04LLM6X1KEG71X	4000-40-00200-0000-000000	PAFS102BSU
3349111461	GE04LLM6X1KEGCF	4000-40-00200-0000-000000	PAFS102MAS
3349111465	GE04LLM6X1KEGCFX	4000-40-00206-0000-000000	PAFS102MASM
3349111466	GE04LLM71	4000-40-00206-0000-000000	PAFS102MASU
3349111471	GE04LLM71X	4000-40-00220-0000-000000	PAFS102MBS
3349111473	GE04LLMCF	4000-40-00220-0000-000000	PAFS102MBSM
3349111477	GE04LLMCFX	4000-40-00220-0001-000000	PAFS102MBSU
3349111478	GE04LLMEDOMDCF	4000-40-00220-0001-000000	PAFS102S34.1NBRSSM
3349111479	GE04LLMMS	4000-40-00280-1000-000000	PAFS102S34.1S
3349111480	GE04LLMSA108CF	4000-40-00280-1000-000000	PAFS102S34.1SM
3349111483	GE04LLMSA9331BOFF71	4000-40-00300-0000-000000	PAFS102S34.1SS
3349111484	GE04LLR71	4000-40-00300-0000-000000	PAFS102S34.1SSM
3349111491	GE04LLR71X	4000-40-00320-0000-000000	PAFS102S34.1SU
3349111494	GE04LLRACFX	4000-40-00320-0000-000000	PAFS102UAS
3349111498	GE04LLRCF	4000-40-00320-3000-000000	PAFS102UASM
3349111500	GE04LLRCFX	4000-40-00320-3000-000000	PAFS102UASU
3349111501	GE04LLRED71	4000-40-00350-0000-000000	PAFS102UBS
3349111502	GE04LLREDCF	4000-40-00350-0000-000000	PAFS102UBSM
3349111503	GE04LLREDOMD71	4000-40-00380-0000-000000	PAFS102UBSU
3349111504	GE04LLREDOMDCF	4000-40-00380-0000-000000	PAFS104/90B31BSM
3349111505	GE04LLREDVITOMDCF	4000-40-00400-0000-000000	PAFS104/90BNBRSSM
3349111506	GE04LLRMS	4000-40-00400-0000-000000	PAFS104/90BS
3349111511	GE04LLRSA188CF	4000-40-00400-0001-000000	PAFS104/90BSM
3349111514	GE04LLRSA188CFX	4000-40-00400-0001-000000	PAFS104/90BSS

3349111519	GE04ZLLM10X1BCF	4000-40-00450-0000-000000	PAFS104/90BSSM
3349111526	GE04ZLLMCF	4000-40-00450-0000-000000	PAFS104/90BSU
3349111528	GE04ZLLREDCF	4000-40-00450-9000-000000	PAFS104/90S42.8S
3349111529	GE05LLRCF	4000-40-00450-9000-000000	PAFS104/90S42.8SM
3349111530	GE06L1/2NPT71	4000-40-00460-0000-000000	PAFS104/90S42.8SS
3349111531	GE06L1/2NPT71X	4000-40-00460-0000-000000	PAFS104/90S42.8SSM
3349111532	GE06L1/2NPTCF	4000-40-00500-0000-000000	PAFS104/90S42.8SU
3349111541	GE06L1/2NPTCFX	4000-40-00500-0000-000000	PAFS104B31BSM
3349111545	GE06L1/2NPTMS	4000-40-00500-0100-000000	PAFS104BNBRSSM
3349111547	GE06L1/4NPT71	4000-40-00500-0100-000000	PAFS104BS
3349111550	GE06L1/4NPT71X	4000-40-00500-1100-000000	PAFS104BSM
3349111552	GE06L1/4NPTCF	4000-40-00500-1100-000000	PAFS104BSS
3349111561	GE06L1/4NPTCFX	4000-40-00515-0000-000000	PAFS104BSSM
3349111562	GE06L1/4NPTDPR71CF	4000-40-00515-0000-000000	PAFS104BSU
3349111563	GE06L1/4NPTMS	4000-40-00550-0000-000000	PAFS104BVITSM
3349111564	GE06L1/4NPTSPH71	4000-40-00550-0000-000000	PAFS104MAS
3349111565	GE06L1/8NPT71	4000-40-00570-0000-000000	PAFS104MASM
3349111566	GE06L1/8NPT71X	4000-40-00570-0000-000000	PAFS104MASU
3349111569	GE06L1/8NPTCF	4000-40-00600-0000-000000	PAFS104MBS
3349111570	GE06L1/8NPTCFX	4000-40-00600-0000-000000	PAFS104MBSM
3349111575	GE06L1/8NPTMS	4000-40-00610-0000-000000	PAFS104MBSU
3349111576	GE06L1/8NPTSPH71	4000-40-00610-0000-000000	PAFS104S42.8NBRSSM
3349111578	GE06L3/8NPT71	4000-40-00630-0000-000000	PAFS104S42.8S
3349111582	GE06L3/8NPT71X	4000-40-00630-0000-000000	PAFS104S42.8SM
3349111597	GE06L3/8NPTCF	4000-40-00640-0000-000000	PAFS104S42.8SS
3349111598	GE06L3/8NPTCFX	4000-40-00640-0000-000000	PAFS104S42.8SSM
3349111620	GE06L3/8NPTMS	4000-40-00660-0000-000000	PAFS104S42.8SU
3349111622	GE06L7/16UNF71	4000-40-00660-0000-000000	PAFS104S42.8VITSM
3349111623	GE06L7/16UNFCF	4000-40-00670-0000-000000	PAFS104UAS
3349111624	GE06L7/16UNFOMDCF	4000-40-00670-0000-000000	PAFS104UASM
3349111638	GE06LL1/4NPTCF	4000-40-00700-0000-000000	PAFS104UASU
3349111641	GE06LL1/8NPT71	4000-40-00700-0000-000000	PAFS104UBS
3349111649	GE06LL1/8NPTCF	4000-40-00705-0000-000000	PAFS104UBSM
3349111656	GE06LL1/8NPTCFX	4000-40-00705-0000-000000	PAFS104UBSU
3349111657	GE06LL1/8NPTMS	4000-40-00750-0000-000000	PAFS106/90BNBRSSM
3349111662	GE06LLM6X1KEG71	4000-40-00750-0000-000000	PAFS106/90BS
3349111664	GE06LLM6X1KEGCF	4000-40-00800-0000-000000	PAFS106/90BSM
3349111668	GE06LLM6X1KEGCFX	4000-40-00800-0000-000000	PAFS106/90BSS
3349111685	GE06LLM71	4000-40-00800-0010-000000	PAFS106/90BSSM
3349111687	GE06LLM71X	4000-40-00800-0010-000000	PAFS106/90BSU
3349111690	GE06LLM8X1KEG71X	4000-40-00800-0100-000000	PAFS106/90S48.6S
3349111691	GE06LLM8X1KEGCF	4000-40-00800-0100-000000	PAFS106/90S48.6SM
3349111701	GE06LLM8X1KEGCFX	4000-40-00800-1101-010000	PAFS106/90S48.6SS
3349111705	GE06LLMCF	4000-40-00800-1101-010000	PAFS106/90S48.6SSM
3349111712	GE06LLMCFX	4000-40-00830-0000-000000	PAFS106/90S48.6SU
3349111713	GE06LLMEDOMDCF	4000-40-00830-0000-000000	PAFS106B31BSM
3349111714	GE06LLMMS	4000-40-00836-0000-000000	PAFS106BNBRSSM
3349111715	GE06LLMSA16CF	4000-40-00836-0000-000000	PAFS106BS
3349111716	GE06LLR1/4KEGCF	4000-40-00880-0000-000000	PAFS106BSM
3349111717	GE06LLR71	4000-40-00880-0000-000000	PAFS106BSS
3349111718	GE06LLR71X	4000-40-00900-0000-000000	PAFS106BSSM
3349111719	GE06LLRCF	4000-40-00900-0000-000000	PAFS106BSU
3349111720	GE06LLRCFX	4000-40-00975-1100-000000	PAFS106MAS

3349111721	GE06LLRED71	4000-40-00975-1100-000000	PAFS106MASM
3349111726	GE06LLREDCF	4000-40-00980-0000-000000	PAFS106MASU
3349111732	GE06LLREDOMD71	4000-40-00980-0000-000000	PAFS106MBS
3349111733	GE06LLREDOMDCF	4000-40-01000-0000-000000	PAFS106MBSM
3349111734	GE06LLREDVITCF	4000-40-01000-0000-000000	PAFS106MBSU
3349111735	GE06LLRMS	4000-40-01050-0000-000000	PAFS106S48.6NBRSSM
3349111737	GE06LLRMSX	4000-40-01050-0000-000000	PAFS106S48.6S
3349111739	GE06LLRSA264MS	4000-40-01100-0000-000000	PAFS106S48.6SM
3349111741	GE06LM10X1KEGCFX	4000-40-01100-0000-000000	PAFS106S48.6SS
3349111744	GE06LM12EDVITOMDCF	4000-40-01200-0000-000000	PAFS106S48.6SSM
3349111753	GE06LM12X1.571X	4000-40-01200-0000-000000	PAFS106S48.6SU
3349111754	GE06LM12X1.5ACF	4000-40-01220-0000-000000	PAFS106UAS
3349111757	GE06LM12X1.5CF	4000-40-01220-0000-000000	PAFS106UASM
3349111758	GE06LM12X1.5CFX	4000-40-01250-0000-000000	PAFS106UASU
3349111759	GE06LM12X1.5EDCF	4000-40-01250-0000-000000	PAFS106UBS
3349111765	GE06LM12X1.5EDOMDCF	4000-40-01264-0000-000000	PAFS106UBSM
3349111767	GE06LM14X1.571X	4000-40-01264-0000-000000	PAFS106UBSU
3349111772	GE06LM14X1.5CF	4000-40-01300-0000-000000	PAFS108/90BNBRSSM
3349111773	GE06LM14X1.5CFX	4000-40-01300-0000-000000	PAFS108/90BS
3349111774	GE06LM14X1.5EDOMDCF	4000-40-01400-0000-000000	PAFS108/90BSM
3349111775	GE06LM16EDCF	4000-40-01400-0000-000000	PAFS108/90BSS
3349111776	GE06LM16EDOMDCF	4000-40-01550-0000-000022	PAFS108/90BSSM
3349111778	GE06LM16X1.5CF	4000-40-01550-0000-000022	PAFS108/90BSU
3349111781	GE06LM16X1.5CFX	4000-40-01550-3000-000000	PAFS108/90S61NBRSSM
3349111784	GE06LM18X1.5EDOMDCF	4000-40-01550-3000-000000	PAFS108/90S61S
3349111785	GE06LM22EDOMDCF	4000-40-01600-0000-000000	PAFS108/90S61SM
3349111786	GE06LM22X1.5CF	4000-40-01600-0000-000000	PAFS108/90S61SS
3349111792	GE06LM31BOFF71	4000-40-01600-9000-000000	PAFS108/90S61SSM
3349111793	GE06LM6KEG71	4000-40-01600-9000-000000	PAFS108/90S61SU
3349111794	GE06LM6KEGCF	4000-40-01673-0000-000000	PAFS108B31BSM
3349111795	GE06LM71	4000-40-01673-0000-000000	PAFS108BNBRSSM
3349111797	GE06LM71X	4000-40-01700-0000-000000	PAFS108BS
3349111802	GE06LM8X171	4000-40-01700-0000-000000	PAFS108BSM
3349111805	GE06LM8X1CF	4000-40-01800-0000-000000	PAFS108BSS
3349111809	GE06LM8X1EDCF	4000-40-01800-0000-000000	PAFS108BSSM
3349111822	GE06LM8X1EDOMDCF	4000-40-01830-0000-000000	PAFS108BSU
3349111824	GE06LM8X1KEGCF	4000-40-01830-0000-000000	PAFS108S61NBRSSM
3349111836	GE06LM8X1KEGCFX	4000-40-01900-0000-000000	PAFS108S61S
3349111840	GE06LMACF	4000-40-01900-0000-000000	PAFS108S61SM
3349111845	GE06LMACFX	4000-40-02000-0000-000000	PAFS108S61SS
3349111851	GE06LMCF	4000-40-02000-0000-000000	PAFS108S61SSM
3349111853	GE06LMCFX	4000-40-02300-0000-000000	PAFS108S61SU
3349111854	GE06LMDPR71CF	4000-40-02300-0000-000000	PAFS108S61VITSM
3349111855	GE06LMED71	4000-40-02400-0000-000000	PAFS110/90BS
3349111856	GE06LMEDCF	4000-40-02400-0000-000000	PAFS110/90BSM
3349111857	GE06LMEDOMD71	4000-40-02600-0000-000000	PAFS110/90BSSM
3349111859	GE06LMEDOMDCF	4000-40-02600-0000-000000	PAFS110/90BSU
3349111863	GE06LMEDSPH71	400-102106	PAFS110/90S76.6S
3349111864	GE06LMEDVITCF	400-102122	PAFS110/90S76.6SM
3349111865	GE06LMEDVITOMDCF	400-105411	PAFS110/90S76.6SU
3349111866	GE06LMMS	400-10M	PAFS110B31BSM
3349111867	GE06LMSA301CF	400-12M	PAFS110BNBRSSM
3349111868	GE06LMSA301CFX	400-204020	PAFS110BS

3349111880	GE06LR1/271	400-204025	PAFS110BSM
3349111890	GE06LR1/271X	4002FIL	PAFS110BSS
3349111892	GE06LR1/2CF	4002FIL	PAFS110BSSM
3349111896	GE06LR1/2CFX	400-300100	PAFS110BSU
3349111899	GE06LR1/2ED71	400-300502	PAFS110S76.6NBRSSM
3349111900	GE06LR1/2EDCF	400-300703	PAFS110S76.6S
3349111902	GE06LR1/2EDOMD71	400-300706	PAFS110S76.6SM
3349111903	GE06LR1/2EDOMDCF	400-300708	PAFS110S76.6SS
3349111906	GE06LR1/2EDVOMDCF	400-300709	PAFS110S76.6SSM
3349111910	GE06LR1/2KEG71	400-300710	PAFS110S76.6SU
3349111917	GE06LR1/2MS	400-300712	PAFS112B31BSM
3349111941	GE06LR1/2MSX	400-300715	PAFS112BNBRSSM
3349111942	GE06LR1/2SPH71	400-300716	PAFS112BS
3349111947	GE06LR1/471	400-302100	PAFS112BSM
3349111948	GE06LR1/471X	400-302102	PAFS112BSS
3349111964	GE06LR1/4CF	400-303102	PAFS112BSSM
3349111965	GE06LR1/4CFX	400-303105	PAFS112BSU
3349111966	GE06LR1/4DPR71CF	4003FIL	PAFS112S90.5NBRSSM
3349111967	GE06LR1/4ED71	4003FIL	PAFS112S90.5S
3349111968	GE06LR1/4EDCF	40043824+B	PAFS112S90.5SM
3349111969	GE06LR1/4EDMS	40043902+B	PAFS112S90.5SS
3349111970	GE06LR1/4EDOMD71	4004FIL	PAFS112S90.5SSM
3349111971	GE06LR1/4EDOMDCF	4004FIL	PAFS112S90.5SU
3349111972	GE06LR1/4EDOMDMS	400-6M	PAFS114BNBRSSM
3349111973	GE06LR1/4EDVITCF	400885261B	PAFS114BS
3349111975	GE06LR1/4EDVOMDCF	400-8M	PAFS114BSM
3349111976	GE06LR1/4KEG71	4009FIL	PAFS114BSS
3349111977	GE06LR1/4KEG71X	4009FIL	PAFS114BSSM
3349111978	GE06LR1/4KEGCF	401-000500	PAFS114BSU
3349111980	GE06LR1/4KEGCFX	4010-27-C	PAFS114S103NBRSSM
3349111982	GE06LR1/4MS	4010-28-C	PAFS114S103S
3349111983	GE06LR1/4MSX	4010-2P	PAFS114S103SM
3349111989	GE06LR1/4SPH71	4010-3P	PAFS114S103SS
3349111990	GE06LR1/8KEG71	4010-6P	PAFS114S103SSM
3349111997	GE06LR1/8KEG71X	4010FIL	PAFS114S103SU
3349111998	GE06LR1/8KEGCF	4010FIL	PAFS116B31BS
3349112001	GE06LR1/8KEGCFX	4012FIL	PAFS116BNBRSSM
3349112014	GE06LR1/8KEGMS	4012FIL	PAFS116BS
3349112027	GE06LR1/8KEGMSX	4014G0Z4-C	PAFS116BSM
3349112035	GE06LR3/871	4014G4X4-C	PAFS116BSS
3349112057	GE06LR3/871X	4015FIL	PAFS116BSSM
3349112058	GE06LR3/8CF	4015FIL	PAFS116BSU
3349112060	GE06LR3/8CFX	4016FIL	PAFS116S115.5NBRSSM
3349112063	GE06LR3/8DPR71CF	4016FIL	PAFS116S115.5S
3349112064	GE06LR3/8DPR71MS	4017FIL	PAFS116S115.5SM
3349112075	GE06LR3/8ED71	4017FIL	PAFS116S115.5SS
3349112082	GE06LR3/8EDCF	4019H	PAFS116S115.5SSM
3349112083	GE06LR3/8EDOMD71	401C	PAFS116S115.5SU
3349112084	GE06LR3/8EDOMDCF	401C	PAFS118BNBRSSM
3349112085	GE06LR3/8EDVOMDCF	4020 56 00WP2	PAFS118BS
3349112094	GE06LR3/8KEG71	4020 56 00WP3	PAFS118BSM
3349112095	GE06LR3/8MS	4020 60 00WP2	PAFS118BSS
3349112097	GE06LR3/8MSX	4020 60 00WP3	PAFS118BSSM

3349112101	GE06LR3/8SPH71	4021 56 14WP2	PAFS118BSU
3349112103	GE06LR71	4021 56 14WP3	PAFS118S142NBRSSM
3349112120	GE06LR71X	4021 60 18WP2	PAFS118S142S
3349112139	GE06LRACF	4021 60 18WP3	PAFS118S142SM
3349112148	GE06LRACFX	40-2110AR	PAFS118S142SS
3349112149	GE06LRAMSX	40-2110AR	PAFS118S142SSM
3349112151	GE06LRCF	4022 56 14WP2	PAFS118S142SU
3349112159	GE06LRCFX	4022 56 14WP3	PAFS401/90BNBRSSM
3349112161	GE06LRED71	4022 60 18WP2	PAFS401/90BS
3349112165	GE06LREDCF	4022 60 18WP3	PAFS401/90BSM
3349112167	GE06LREDDPR71CF	4023 60 22WP2	PAFS401/90BSS
3349112169	GE06LREDMS	4023 60 22WP3	PAFS401/90BSSM
3349112172	GE06LREDOMD71	402-4	PAFS401/90BSU
3349112173	GE06LREDOMD71BP	402-5	PAFS401/90S21.6S
3349112175	GE06LREDOMDCF	402-6	PAFS401/90S21.6SM
3349112176	GE06LREDOMDMS	402-8	PAFS401/90S21.6SS
3349112178	GE06LREDSA381OMDCF	402A	PAFS401/90S21.6SSM
3349112180	GE06LREDVITCF	402B	PAFS401/90S21.6SU
3349112181	GE06LREDVITOMDCF	402D	PAFS401B38NBRSSM
3349112182	GE06LRMS	402E	PAFS401B38S
3349112183	GE06LRMSX	403000E18M100	PAFS401B38SM
3349112187	GE06LRSPH71	4030FIL	PAFS401B38SS
3349112190	GE06S1/2NPT71	4030FIL	PAFS401B38SSM
3349112191	GE06S1/2NPT71X	4032FIL	PAFS401B38SU
3349112192	GE06S1/2NPTCF	4032FIL	PAFS401BS
3349112193	GE06S1/2NPTCFX	4034720-K050	PAFS401BSM
3349112194	GE06S1/4NPT71	40400R	PAFS401BSSM
3349112195	GE06S1/4NPT71X	40400R	PAFS401BSU
3349112196	GE06S1/4NPTCF	404050XR/08011701	PAFS401MAS
3349112197	GE06S1/4NPTCFX	404050XR/10053101	PAFS401MASM
3349112210	GE06S1/4NPTMS	404050XR/11082301	PAFS401MASU
3349112211	GE06S1/8NPT71	4040FIL	PAFS401MBS
3349112214	GE06S1/8NPT71X	4040FIL	PAFS401MBSM
3349112215	GE06S1/8NPTCF	4040FIL	PAFS401MBSU
3349112216	GE06S1/8NPTCFX	4040FIL	PAFS401S17.5S
3349112218	GE06S3/8NPT71	404100XR/11041601	PAFS401S17.5SM
3349112228	GE06S3/8NPT71X	404100XR/11080501	PAFS401S17.5SS
3349112230	GE06S3/8NPTCFX	40410AY	PAFS401S17.5SU
3349112232	GE06SM14X1.5CF	40410AY	PAFS401S21.6S
3349112238	GE06SM14X1.5CFX	404150XR/11051601	PAFS401S21.6SM
3349112239	GE06SM14X1.5EDCF	404150XR/11091501	PAFS401S21.6SU
3349112241	GE06SM14X1.5EDOMDCF	4041FIL	PAFS401UAS
3349112267	GE06SM71	4041FIL	PAFS401UASM
3349112272	GE06SM71X	4041FIL	PAFS401UASU
3349112275	GE06SMACFX	4041FIL	PAFS402/90B20X2SM3
3349112276	GE06SMCF	404200XR/10080401	PAFS402/90BNBRSSM
3349112279	GE06SMCFX	404200XR/11051601	PAFS402/90BS
3349112284	GE06SMED71	4042-OM/UK/DE/FR/IT	PAFS402/90BSM
3349112285	GE06SMEDCF	404300XR/13040201	PAFS402/90BSS
3349112289	GE06SMEDOMD71	4043-OM/UK/DE/FR/IT	PAFS402/90BSSM
3349112291	GE06SMEDOMDCF	404T02LXR/07062901	PAFS402/90BSU
3349112292	GE06SMEDVITCF	404T03XE/10022301	PAFS402/90S27.2S
3349112298	GE06SMEDVITOMDCF	404T03XE/11060901	PAFS402/90S27.2SM

3349112299	GE06SR1/271	404T05XE/10022301	PAFS402/90S27.2SS
3349112300	GE06SR1/271X	404T05XE/11060902	PAFS402/90S27.2SSM
3349112323	GE06SR1/2CF	404T06XE/11053101	PAFS402/90S27.2SU
3349112350	GE06SR1/2CFX	404T06XE/13032501	PAFS402BNBRSSM
3349112356	GE06SR1/2ED71	404T06XE/13052301	PAFS402BS
3349112362	GE06SR1/2EDCF	404T07XE/07011201	PAFS402BSM
3349112367	GE06SR1/2EDOMD71	404T07XE/12031901	PAFS402BSS
3349112381	GE06SR1/2EDOMDCF	404T07XE/13032501	PAFS402BSSM
3349112391	GE06SR1/4KEG71	404T08XE/12031201	PAFS402BSU
3349112393	GE06SR1/4KEGCF	404T09XE/10083101	PAFS402MAS
3349112397	GE06SR1/871	404T09XE/11051001	PAFS402MASM
3349112398	GE06SR1/871X	404T09XE/11113001	PAFS402MASU
3349112400	GE06SR1/8CF	404T11XE/07062201	PAFS402MBS
3349112406	GE06SR1/8ED71	404T11XE/11121601	PAFS402MBSM
3349112412	GE06SR1/8EDCF	404T13XE/07062201	PAFS402MBSU
3349112413	GE06SR1/8EDOMD71	404T13XE/07062202	PAFS402S27.2NBRSSM
3349112414	GE06SR1/8EDOMDCF	404T13XE/11051101	PAFS402S27.2S
3349112418	GE06SR3/871	404T13XE/12031501	PAFS402S27.2SM
3349112424	GE06SR3/871X	404T13XE/12101101	PAFS402S27.2SS
3349112451	GE06SR3/8CF	404T13XE/13022701	PAFS402S27.2SSM
3349112465	GE06SR3/8CFX	404T15XE/08070101	PAFS402S27.2SU
3349112471	GE06SR3/8ED71	404T15XE/10110201	PAFS402UAS
3349112477	GE06SR3/8EDCF	404T15XE/11032801	PAFS402UASM
3349112487	GE06SR3/8EDOMD71	404T15XE/12031901	PAFS402UASU
3349112492	GE06SR3/8EDOMDCF	404T15XE/13040801	PAFS402UBS
3349112493	GE06SR3/8EDVOMDCF	40501V2A	PAFS402UBSM
3349112494	GE06SR3/8MS	4050-27-C	PAFS402UBSU
3349112530	GE06SR71	4050-28-C	PAFS403/90BNBRSSM
3349112533	GE06SR71X	4050-2P	PAFS403/90BS
3349112538	GE06SRACF	4050-3P	PAFS403/90BSM
3349112541	GE06SRCF	4050-5	PAFS403/90BSS
3349112552	GE06SRCFX	4050-6P	PAFS403/90BSSM
3349112566	GE06SRDPR71MS	4052FIL	PAFS403/90BSU
3349112577	GE06SRED71	4052FIL	PAFS403/90S34.1S
3349112590	GE06SREDCF	4054G4X4-C	PAFS403/90S34.1SM
3349112601	GE06SREDOMD71	405V2A	PAFS403/90S34.1SS
3349112607	GE06SREDOMDCF	405V4A	PAFS403/90S34.1SSM
3349112608	GE06SREDVITCF	4061000XR/11051001	PAFS403/90S34.1SU
3349112614	GE06SREDVITOMDCF	406100XR/09082706	PAFS403/90S34X4.5S
3349112620	GE06SRMS	4061250XR/12052301	PAFS403BNBRSSM
3349112622	GE06SRMSX	4061750XR/11052001	PAFS403BS
3349112624	GE06SRSPH71	406200XR/11081801	PAFS403BSM
3349112628	GE06ZL1/4NPTCF	4064FIL	PAFS403BSS
3349112640	GE06ZLLREDCF	4064FIL	PAFS403BSSM
3349112658	GE06ZLM12X1.5EDCF	406600XR/10101401	PAFS403BSU
3349112689	GE06ZLMED71	406600XR/11052001	PAFS403MAS
3349112699	GE06ZLMEDCF	406600XR/11052002	PAFS403MASM
3349112700	GE06ZLMEDVITCF	40684-224-00A	PAFS403MASU
3349112703	GE06ZLR1/2ED71	4069W-023-000	PAFS403MBS
3349112704	GE06ZLR1/2EDCF	406V4A	PAFS403MBSM
3349112711	GE06ZLR1/4ED71	4070H-023-000	PAFS403MBSU
3349112712	GE06ZLR1/4EDCF	40-77032	PAFS403S34.1NBRSSM
3349112735	GE06ZLR1/4EDEPDM71	40-77032	PAFS403S34.1S

3349112738	GE06ZLR1/4EDVCF	4078-10	PAFS403S34.1SM
3349112748	GE06ZLR1/4KEGCF	4078-16	PAFS403S34.1SS
3349112759	GE06ZLR3/8ED71	4078-20	PAFS403S34.1SSM
3349112770	GE06ZLR3/8EDCF	4078-27	PAFS403S34.1SU
3349112780	GE06ZLRED71	409FIL	PAFS403UAS
3349112781	GE06ZLREDCF	409FIL	PAFS403UASM
3349112783	GE06ZLREDVITCF	40AP1CF	PAFS403UASU
3349112784	GE06ZSMED71	40AP2CF	PAFS403UBS
3349112785	GE06ZSMEDCF	40BF9933	PAFS403UBSM
3349112789	GE06ZSR1/2ED71	40CKO9900	PAFS403UBSU
3349112799	GE06ZSR1/2EDCF	40CL9900	PAFS404/90BNBRSSM
3349112800	GE06ZSR1/8ED71	40CN102QBM3KG241	PAFS404/90BS
3349112810	GE06ZSR1/8EDCF	40CN102QBT1KG241	PAFS404/90BSM
3349112812	GE06ZSR3/8ED71	40CN102QEVF1KG244	PAFS404/90BSS
3349112825	GE06ZSRED71	40CN105QBM3KG201	PAFS404/90BSSM
3349112829	GE06ZSREDCF	40CN105QBM3KG241	PAFS404/90BSU
3349112831	GE08L1/2NPT71	40CN105QBPKG241	PAFS404/90S42.8S
3349112833	GE08L1/2NPT71X	40CN105QBT1KG241	PAFS404/90S42.8SM
3349112836	GE08L1/2NPTCF	40CN105QBT1KG244	PAFS404/90S42.8SS
3349112839	GE08L1/2NPTCFX	40CN105QEVF1KG244	PAFS404/90S42.8SSM
3349112843	GE08L1/2NPTMS	40CN105QEVM3KG244	PAFS404/90S42.8SU
3349112844	GE08L1/4NPT71	40CN105QEVT1KG244	PAFS404BNBRSSM
3349112856	GE08L1/4NPT71X	40CN110QBM3GG201	PAFS404BS
3349112858	GE08L1/4NPTCF	40CN110QBM3GG241	PAFS404BSM
3349112879	GE08L1/4NPTCFX	40CN110QBM3KG241	PAFS404BSS
3349112880	GE08L1/4NPTDPR71CF	40CN110QBM3KG244	PAFS404BSSM
3349112882	GE08L1/4NPTMS	40CN110QBPKG201	PAFS404BSU
3349112887	GE08L1/4NPTMSX	40CN110QBT1KG201	PAFS404MAS
3349112903	GE08L1/8NPT71	40CN110QBT1KG241	PAFS404MASM
3349112904	GE08L1/8NPT71X	40CN110QEVM3KG244	PAFS404MASU
3349112946	GE08L1/8NPTCF	40CN110QEVM3KS164	PAFS404MBS
3349112951	GE08L1/8NPTCFX	40CN110QEVPKG244	PAFS404MBSM
3349113912	GE08L3/8NPT71	40CN110QEVT1KG204	PAFS404MBSU
3349113914	GE08L3/8NPT71X	40CN110QEVT1KG244	PAFS404S42.8NBRSSM
3349113923	GE08L3/8NPTCF	40CN110QEVT1KS164	PAFS404S42.8S
3349113924	GE08L3/8NPTCFX	40CN110QVT1MG207S17	PAFS404S42.8SM
3349114018	GE08L3/8NPTDPR71CF	40CN110QVT1PG204	PAFS404S42.8SS
3349114025	GE08L3/8NPTMS	40CN120QBM3GG241	PAFS404S42.8SSM
3349114026	GE08L7/16UNF71	40CN120QBM3KG201	PAFS404S42.8SU
3349114033	GE08L7/16UNFCF	40CN120QBM3KG241	PAFS404UAS
3349114046	GE08L7/16UNFOMD71	40CN120QBT1GG201	PAFS404UASM
3349114047	GE08L7/16UNFOMDCF	40CN120QBT1KG241	PAFS404UASU
3349114053	GE08L9/16UNFCF	40CN120QEVM3KG244	PAFS404UBS
3349114054	GE08L9/16UNFOMDCF	40CN120QEVT1KG204	PAFS404UBSM
3349114055	GE08LL1/4NPTCF	40CN120QEVT1KG244	PAFS404UBSU
3349114056	GE08LL1/8NPT71	40CN1WRBM3KG201	PAFS405/90BNBRSSM
3349114065	GE08LL1/8NPTCF	40CN1WRBM3KG241	PAFS405/90BS
3349114067	GE08LL1/8NPTCFX	40CN1WRBT1KG201	PAFS405/90BSM
3349114070	GE08LLM71	40CN1WRVM3KG244	PAFS405/90BSS
3349114072	GE08LLM71X	40CN202QBM3KG241	PAFS405/90BSSM
3349114075	GE08LLM8X1KEGCF	40CN202QBT1KG201	PAFS405/90BSU
3349115014	GE08LLM8X1KEGCFX	40CN202QEVM3KG244	PAFS405/90S48.6S
3349115019	GE08LLMACF	40CN202QEVT1KG204	PAFS405/90S48.6SM

3349115036	GE08LLMCF	40CN202QEVT1KG244	PAFS405/90S48.6SS
3349115040	GE08LLMCFX	40CN205QBF1KG241	PAFS405/90S48.6SSM
3349115042	GE08LLMMS	40CN205QBM3KG201	PAFS405/90S48.6SU
3349115043	GE08LLR1/471	40CN205QBM3KG241	PAFS405BNBRSSM
3349115045	GE08LLR1/4CF	40CN205QBPKG241	PAFS405BS
3349115046	GE08LLR1/4CFX	40CN205QBT1KG201	PAFS405BSM
3349115047	GE08LLR1/4MS	40CN205QBT1KG241	PAFS405BSS
3349115052	GE08LLR1/4MSX	40CN205QEVM3KG244	PAFS405BSSM
3349116008	GE08LLR71	40CN205QEVPKG244	PAFS405BSU
3349116015	GE08LLR71X	40CN205QEVT1KG244	PAFS405MAS
3349116031	GE08LLRACFX	40CN205QVT1KG241	PAFS405MASM
3349116033	GE08LLRCF	40CN210CBM3GS161	PAFS405MASU
3349116043	GE08LLRCFX	40CN210CBM3KG241	PAFS405MBS
3349116046	GE08LLRMS	40CN210QBF1KG241	PAFS405MBSM
3349116047	GE08LLRMSX	40CN210QBM3GG201	PAFS405MBSU
3349116051	GE08LM10X171X	40CN210QBM3GG241	PAFS405S48.6NBRSSM
3349116054	GE08LM10X1CF	40CN210QBM3GS161	PAFS405S48.6S
3349116059	GE08LM10X1CFX	40CN210QBM3KG201	PAFS405S48.6SM
3349116065	GE08LM10X1EDCF	40CN210QBM3KG241	PAFS405S48.6SS
3349116067	GE08LM10X1EDOMD71	40CN210QBPKG201	PAFS405S48.6SSM
3349116075	GE08LM10X1EDOMDCF	40CN210QBPKG241	PAFS405S48.6SU
3349116077	GE08LM10X1EDVITCF	40CN210QBT1GG201	PAFS405UAS
3349116078	GE08LM10X1EDVOMDCF	40CN210QBT1GG241	PAFS405UASM
3349116084	GE08LM12X1.5KEGCF	40CN210QBT1GS161	PAFS405UASU
3349116089	GE08LM12X1.5KEGCFX	40CN210QBT1KG201	PAFS405UBS
3349116094	GE08LM14X1.5CF	40CN210QBT1KG241	PAFS405UBSM
3349116096	GE08LM14X1.5CFX	40CN210QEVF1KG204	PAFS405UBSU
3349116110	GE08LM14X1.5EDCF	40CN210QEVM3KG204	PAFS406/90BNBRSSM
3349116124	GE08LM14X1.5EDOMD71	40CN210QEVM3KG244	PAFS406/90BS
3349116125	GE08LM14X1.5EDOMDCF	40CN210QEVPKG244	PAFS406/90BSM
3349116126	GE08LM16EDVITOMDCF	40CN210QEVT1KG244	PAFS406/90BSS
3349116128	GE08LM16X1.5EDCF	40CN210QVT1KG241	PAFS406/90BSSM
3349116129	GE08LM16X1.5EDOMDCF	40CN220QBM3GG241	PAFS406/90BSU
3349116130	GE08LM18X1.5CF	40CN220QBM3KG241	PAFS406/90S61NBRSSM
3349116131	GE08LM18X1.5CFX	40CN220QBM3KG244	PAFS406/90S61S
3349116133	GE08LM18X1.5EDCF	40CN220QBPKG241	PAFS406/90S61SM
3349116141	GE08LM18X1.5EDOMDCF	40CN220QBT1KG241	PAFS406/90S61SS
3349116145	GE08LM22EDOMDCF	40CN220QEVM3KG244	PAFS406/90S61SSM
3349116147	GE08LM22X1.5CFX	40CN220QEVT1KG204	PAFS406/90S61SU
3349116150	GE08LM22X1.5EDCF	40CN220QEVT1KG244	PAFS406BNBRSSM
3349116151	GE08LM71	40CN220QVF3KG244	PAFS406BS
3349116152	GE08LM71X	40CN220QVF4KG244	PAFS406BSM
3349116155	GE08LM8X1EDCF	40CN220QVKG241S06	PAFS406BSS
3349116161	GE08LMACF	40CN2WRVM3GG244	PAFS406BSSM
3349116163	GE08LMACFX	40CN99010-316	PAFS406BSU
3349116165	GE08LMBLKXBP	40CN99012-316	PAFS406S61NBRSSM
3349116172	GE08LMCF	40CN9904-316	PAFS406S61S
3349116184	GE08LMCFX	40CN9906-316	PAFS406S61SM
3349116186	GE08LMDPR71CF	40CN9908-316	PAFS406S61SS
3349116191	GE08LMED71	40CPM1CF	PAFS406S61SSM
3349116193	GE08LMEDCF	40CPM2CF	PAFS406S61SU
3349116208	GE08LMEDDPR71CF	40CPM2SS	PAFS407BNBRSSM
3349116209	GE08LMEDOMD71	40CS9600-1/4A	PAFS407BS

3349116217	GE08LMEDOMDCF	40CT9690	PAFS407BSM
3349116220	GE08LMEDVITCF	40CT9990	PAFS407BSS
3349116223	GE08LMEDVITOMDCF	40CX9999	PAFS407BSSM
3349116225	GE08LMMS	40F9933	PAFS407S76.6NBRSSM
3349116230	GE08LMMSX	40KAIW17MPN	PAFS407S76.6S
3349116249	GE08LMOB3X	40KAIW17MPNS_02	PAFS407S76.6SM
3349116250	GE08LR1/271	40KAIW17MPX	PAFS407S76.6SS
3349116251	GE08LR1/271X	40KAIW21MPN	PAFS407S76.6SSM
3349116253	GE08LR1/2CF	40KAIW21MPNS_01	PAFS408BNBRSSM
3349116260	GE08LR1/2CFX	40KAIW21MPX	PAFS408BS
3349116263	GE08LR1/2DPR71CF	40MAH16RH9	PAFS408BSM
3349116267	GE08LR1/2ED71	40MAH4RH9	PAFS408BSS
3349116270	GE08LR1/2EDCF	40MAH6RH9	PAFS408BSSM
3349116279	GE08LR1/2EDOMD71	40MAH9H9	PAFS408S90.5NBRSSM
3349116283	GE08LR1/2EDOMDCF	40MAH9RH9	PAFS408S90.5S
3349116285	GE08LR1/2EDVITCF	40MARH9RH9	PAFS408S90.5SM
3349116287	GE08LR1/2EDVITOMDCF	40PMQ1CF	PAFS408S90.5SS
3349116296	GE08LR1/2KEG71	40SFAK13SXN	PAFS408S90.5SSM
3349116298	GE08LR1/2MS	40SFAK17SXN	PAFSF080G38S
3349116303	GE08LR1/2MSX	40SFAK21SXN	PAFSF080G38SM
3349116310	GE08LR1/4KEG71	40SFAK26SXN	PAFSF080G38SU
3349116316	GE08LR1/4KEG71X	40SFIW17SXN	PAFSF080GS
3349116318	GE08LR1/4KEGCF	40SFIW21SXN	PAFSF080GSM
3349116325	GE08LR1/4KEGCFX	40SFIW26SXN	PAFSF080GSU
3349116329	GE08LR1/4KEGMS	40SFTF06SXN	PAFSF080S17.5S
3349116330	GE08LR1/4KEGMSX	40SFTF08SXN	PAFSF080S17.5SM
3349116333	GE08LR1/871	40SFTF10SXN	PAFSF080S17.5SU
3349116338	GE08LR1/871X	40SFTF13SXN	PAFSF080S21.6S
3349116339	GE08LR1/8CF	40SFTF19SXN	PAFSF080S21.6SM
3349116351	GE08LR1/8CFX	40UF9933	PAFSF080S21.6SU
3349116354	GE08LR1/8DPR71CF	40VM9071	PAFSF100G12S
3349116367	GE08LR1/8ED71	40VM9072	PAFSF100G12SM
3349116373	GE08LR1/8EDCF	40VM9075	PAFSF100G12SU
3349116374	GE08LR1/8EDDPR71CF	40VM9081	PAFSF100GS
3349116399	GE08LR1/8EDMS	40VM9082	PAFSF100GSM
3349116401	GE08LR1/8EDOMD71	4-1 FBZ-SS	PAFSF100GSU
3349116406	GE08LR1/8EDOMDCF	4-1 HBZ-SS	PAFSF100S21.6S
3349116407	GE08LR1/8EDOMDMS	4-1 TRBZ-SS	PAFSF100S21.6SM
3349116415	GE08LR1/8EDVITCF	4-1 Z2HLZ-1-SS	PAFSF100S21.6SU
3349116423	GE08LR1/8EDVOMDCF	4-1 Z2HLZ-2-SS	PAFSF100S27.2S
3349116427	GE08LR1/8KEG71	4-1 Z2HLZ-3-SS	PAFSF100S27.2SM
3349116438	GE08LR1/8KEG71X	4-1 Z2HLZ-4-SS	PAFSF100S27.2SU
3349116441	GE08LR1/8KEGCF	4-1 Z2HLZ7-2-SS	PAFSF102G34S
3349116444	GE08LR1/8KEGCFX	4-1 Z2HLZ7-3-SS	PAFSF102G34SM
3349116445	GE08LR1/8KEGMSX	4-1 Z2HLZ7-4-SS	PAFSF102G34SU
3349116446	GE08LR1/8MS	4-1 Z2HLZ7-SS	PAFSF102GS
3349116447	GE08LR1/8MSX	4-1 Z3HLZ7-SS	PAFSF102GSM
3349116455	GE08LR3/4EDOMDCF	4-1 ZHLW2-SS	PAFSF102GSU
3349116462	GE08LR3/871	4-1 ZHLZ7-SS	PAFSF102S27.2S
3349116464	GE08LR3/871X	4-1 ZHLZ-SS	PAFSF102S27.2SM
3349116468	GE08LR3/8CF	4-1/2 AW2-SS	PAFSF102S27.2SU
3349116472	GE08LR3/8CFX	4-1/2 ZHLW2-SS	PAFSF102S34.5S
3349116475	GE08LR3/8DMSCF	4-1/4 F5OG-S	PAFSF102S34.5SM

3349116476	GE08LR3/8DPR71CF	4-1/4 ZEBW2-SS	PAFSF102S34.5SU
3349116480	GE08LR3/8DPR71MS	4-1/4 ZELW2-SS	PAFSF104G1S
3349116499	GE08LR3/8ED71	4-1/4 ZHBW2-SS	PAFSF104G1SM
3349116501	GE08LR3/8EDCF	4-1/4 ZHLW2-SS	PAFSF104G1SU
3349116502	GE08LR3/8EDDPR71CF	4-1/8 F5OG-S	PAFSF104GS
3349116523	GE08LR3/8EDMS	4-1/8 ZEBW2-SS	PAFSF104GSM
3349116525	GE08LR3/8EDNBROMD71	4-1/8 ZELW2-SS	PAFSF104GSU
3349116527	GE08LR3/8EDOMD71	4-1/8 ZHBW2-SS	PAFSF104S34.5S
3349116541	GE08LR3/8EDOMDCF	4-1/8 ZHLW2-SS	PAFSF104S34.5SM
3349116546	GE08LR3/8EDVITCF	4-1/8F5OHG4S	PAFSF104S34.5SU
3349116554	GE08LR3/8EDVOMDCF	4-10 F5OX-S	PAFSF104S42.8S
3349116560	GE08LR3/8KEG71	410009-09	PAFSF104S42.8SM
3349120019	GE08LR3/8KEGCF	410017-100	PAFSF104S42.8SU
3349120025	GE08LR3/8KEGCFX	410017-120	PAFSF106G114S
3349120030	GE08LR3/8MS	410017-140	PAFSF106G114SM
3349120034	GE08LR71	410017-170	PAFSF106G114SU
3349120042	GE08LR71X	410017-200	PAFSF106GS
3349121011	GE08LRACF	410018-140	PAFSF106GSM
3349121041	GE08LRCF	410018-170	PAFSF106GSU
3349121042	GE08LRCFX	410018-200	PAFSF106S42.8S
3349121062	GE08LRDPR71CF	4100-40-00125-0000-000000	PAFSF106S42.8SM
3349121071	GE08LRED71	4100-40-00125-0000-000000	PAFSF106S42.8SU
3349121074	GE08LREDCF	4100-40-00300-0000-000000	PAFSF106S48.6S
3349121076	GE08LREDD2.5OMDCF	4100-40-00300-0000-000000	PAFSF106S48.6SM
3349121113	GE08LREDDPR71CF	4100-40-00350-0000-000000	PAFSF106S48.6SS
3349121117	GE08LREDI8OMDCF	4100-40-00350-0000-000000	PAFSF106S48.6SU
3349121121	GE08LREDMS	4100-40-00390-0000-000000	PAFSF108G112S
3349121129	GE08LREDNBROMD71	4100-40-00390-0000-000000	PAFSF108G112SM
3349121147	GE08LREDOMD71	4100-40-00400-0000-000000	PAFSF108G112SU
3349121150	GE08LREDOMDCF	4100-40-00400-0000-000000	PAFSF108GS
3349121160	GE08LREDOMDMS	4100-40-00430-0000-000000	PAFSF108GSM
3349121163	GE08LREDVITCF	4100-40-00430-0000-000000	PAFSF108GSU
3349121174	GE08LREDVITOMDCF	4100-40-00475-0000-000000	PAFSF108S48.6S
3349121175	GE08LRMS	4100-40-00475-0000-000000	PAFSF108S48.6SM
3349121176	GE08LRMSX	4100-40-00500-0000-000000	PAFSF108S48.6SU
3349121177	GE08S1/2NPT71	4100-40-00500-0000-000000	PAFSF108S61.0S
3349121178	GE08S1/2NPT71X	4100-40-00500-0000-000022	PAFSF108S61.0SM
3349121183	GE08S1/2NPTCF	4100-40-00500-0000-000022	PAFSF108S61.0SU
3349121184	GE08S1/2NPTCFX	4100-40-00520-0000-000000	PAFSF110G112S
3349121189	GE08S1/2NPTMS	4100-40-00520-0000-000000	PAFSF110G112SM
3349121194	GE08S1/4NPT	4100-40-00600-0000-000000	PAFSF110G2S
3349121196	GE08S1/4NPT71	4100-40-00600-0000-000000	PAFSF110G2SM
3349121212	GE08S1/4NPT71X	4100-40-00715-3000-000022	PAFSF110G2SU
3349121217	GE08S1/4NPTCF	4100-40-00715-3000-000022	PAFSF110G3/4S
3349121223	GE08S1/4NPTCFX	4100-40-00800-0000-000000	PAFSF110GS
3349121225	GE08S1/4NPTMS	4100-40-00800-0000-000000	PAFSF110GSM
3349121227	GE08S3/8NPT71	4100-40-00850-0000-000000	PAFSF110GSU
3349121231	GE08S3/8NPT71X	4100-40-00850-0000-000000	PAFSF110S61.0S
3349121243	GE08S3/8NPTCF	4100-40-00900-0000-000000	PAFSF110S61.0SM
3349121251	GE08S3/8NPTCFX	4100-40-00900-0000-000000	PAFSF110S61.0SSM
3349121256	GE08S7/16UNF71	4100-40-00950-0000-000000	PAFSF110S61.0SU
3349121259	GE08S7/16UNFCF	4100-40-00950-0000-000000	PAFSF110S76.6S
3349121263	GE08S7/16UNFOMD71	4100-40-01000-0000-000000	PAFSF110S76.6SM

3349121274	GE08S7/16UNFOMDCF	4100-40-01000-0000-000000	PAFSF110S76.6SU
3349121282	GE08S7/16UNFVITCF	4100-40-01000-0010-000000	PAFSF112G212S
3349121283	GE08S9/16UNFCFX	4100-40-01000-0010-000000	PAFSF112G212SM
3349121289	GE08SM12EDOMDCF	4100-40-01004-0000-000000	PAFSF112G212SU
3349121292	GE08SM12X1.5CF	4100-40-01004-0000-000000	PAFSF112G3/4S
3349121294	GE08SM12X1.5EDCF	4100-40-01380-0000-000000	PAFSF112GS
3349121296	GE08SM71	4100-40-01380-0000-000000	PAFSF112GSM
3349121302	GE08SM71X	4100-40-02500-0000-000000	PAFSF112GSU
3349121308	GE08SMACFX	4100-40-02500-0000-000000	PAFSF112S76.6S
3349121311	GE08SMCF	41025S-N	PAFSF112S76.6SM
3349121319	GE08SMCFX	4109FIL	PAFSF112S76.6SU
3349121329	GE08SMED71	4109FIL	PAFSF112S90.5S
3349121337	GE08SMEDCF	4110-5	PAFSF112S90.5SM
3349121338	GE08SMEDOMD71	4-12 FBZ-SS	PAFSF112S90.5SU
3349121340	GE08SMEDOMDCF	412 KIT	PAFSF114G3S
3349121341	GE08SMEDOMDNBR71	4-12 ZHLS-SS	PAFSF114G3SM
3349121344	GE08SMEDVITCF	41203B	PAFSF114G3SU
3349121345	GE08SMEDVITOMDCF	4120MAM10	PAFSF114GS
3349121355	GE08SMMS	4120R10MTC	PAFSF114GSM
3349121357	GE08SR1/271	4120R2410	PAFSF114GSU
3349121365	GE08SR1/271X	4120R2410MTC	PAFSF114S103S
3349121373	GE08SR1/2ACF	4120R2430	PAFSF114S103SM
3349121374	GE08SR1/2CF	4120R2430MTC	PAFSF114S103SU
3349121380	GE08SR1/2CFX	4120R30	PAFSF114S90.5S
3349121390	GE08SR1/2ED71	4120R30MTC	PAFSF114S90.5SM
3349121396	GE08SR1/2EDCF	4120RPA10MTC	PAFSF114S90.5SU
3349121401	GE08SR1/2EDOMD71	4120RPA2410MTC	PAFSF116G312S
3349121405	GE08SR1/2EDOMDCF	4120RV10	PAFSF116G312SM
3349121409	GE08SR1/2MS	4120RV30	PAFSF116G312SU
3349121410	GE08SR1/2MSX	412-3	PAFSF116GS
3349121417	GE08SR1/4KEGCF	412-4	PAFSF116GSM
3349121418	GE08SR1/4KEGCFX	412-5	PAFSF116GSU
3349121419	GE08SR1/871	412-6	PAFSF116S103S
3349121421	GE08SR1/8CF	4126G	PAFSF116S103SM
3349121422	GE08SR3/871	4126G-023-000	PAFSF116S103SU
3349121423	GE08SR3/871X	4-12F42EDMXS	PAFSF116S115.5S
3349121431	GE08SR3/8CF	412ST-3	PAFSF116S115.5SM
3349121435	GE08SR3/8CFX	412ST-4	PAFSF116S115.5SU
3349121440	GE08SR3/8DPR71CF	412ST-6	PAFSF118G4S
3349121441	GE08SR3/8ED71	4135-00950	PAFSF118G4SM
3349121442	GE08SR3/8EDCF	4135-00950	PAFSF118G4SU
3349121452	GE08SR3/8EDOMD71	4140-2582	PAFSF118GS
3349121455	GE08SR3/8EDOMDCF	41410BS3	PAFSF118GSM
3349121459	GE08SR3/8EDVOMDCF	41410BS3	PAFSF118GSU
3349121467	GE08SR3/8MS	4141FIL	PAFSF118S115.5S
3349121474	GE08SR3/8MSX	4141FIL	PAFSF118S115.5SM
3349121476	GE08SR71	4150-5	PAFSF118S115.5SU
3349121477	GE08SR71X	4-16 ZHLW-SS	PAFSF118S142.5S
3349121482	GE08SRCF	416-000005	PAFSF118S142.5SM
3349121487	GE08SRCFX	416-000120	PAFSF118S142.5SU
3349121494	GE08SRED71	416-000160	PAFSF401G38S
3349121497	GE08SREDCF	416-000200	PAFSF401G38SM
3349121505	GE08SREDMS	416-000210	PAFSF401G38SU

3349121507	GE08SREDOMD71	416-000400	PAFSF401GS
3349121510	GE08SREDOMDCF	416-000440	PAFSF401GSM
3349121511	GE08SREDVITOMDCF	416-000443	PAFSF401GSU
3349121515	GE08SRMS	416-001100	PAFSF401S17.5S
3349121518	GE08SRMSX	416-001115	PAFSF401S17.5SM
3349121521	GE08ZL1/4NPTCF	416-001120	PAFSF401S17.5SU
3349121533	GE08ZL1/4NPTVITSSAMS	416-001290	PAFSF401S21.6S
3349121539	GE08ZL7/16UNFCF	416-001320	PAFSF401S21.6SM
3349121541	GE08ZL7/16UNFVITCF	416-001325	PAFSF401S21.6SU
3349121542	GE08ZLM18X1.5EDCF	416-001330	PAFSF402G12S
3349121554	GE08ZLMED71	416-001340	PAFSF402G12SM
3349121558	GE08ZLMEDCF	416-001343	PAFSF402G12SU
3349121559	GE08ZLMEDSSACF	416-001344	PAFSF402GS
3349121562	GE08ZLMEDVITCF	416-001357	PAFSF402GSM
3349121566	GE08ZLR1/2ED71	4160RHH10MTC	PAFSF402GSU
3349121567	GE08ZLR1/2EDCF	4160RHHV10MTC	PAFSF402S21.6S
3349121574	GE08ZLR1/8ED71	4160RHHV10MTC-SLV	PAFSF402S21.6SM
3349121576	GE08ZLR1/8EDCF	4160RP10DRCR	PAFSF402S21.6SU
3349121577	GE08ZLR1/8EDVSSACF	4160RPA10MTC-B	PAFSF402S27.2S
3349121582	GE08ZLR1/8KEGSSACF	416-200105	PAFSF402S27.2SM
3349121583	GE08ZLR3/8ED71	416-201010	PAFSF402S27.2SU
3349121592	GE08ZLR3/8EDCF	416-201012	PAFSF403G34S
3349121598	GE08ZLR3/8EDSSACF	416-201020	PAFSF403G34SM
3349121599	GE08ZLR3/8EDVITCF	416-201022	PAFSF403G34SU
3349121602	GE08ZLR3/8EDVSSACF	416-201030	PAFSF403GS
3349121604	GE08ZLRED71	416-201032	PAFSF403GSM
3349121607	GE08ZLREDCF	416-201070	PAFSF403GSU
3349121608	GE08ZLREDNBR71	416-201072	PAFSF403S27.2S
3349121611	GE08ZLREDSSACF	416-201080	PAFSF403S27.2SM
3349121612	GE08ZLREDVITCF	416-201084	PAFSF403S27.2SU
3349121613	GE08ZS1/4NPTCF	416-201086	PAFSF403S34.5S
3349121617	GE08ZS7/16UNFCF	4168.2	PAFSF403S34.5SM
3349121618	GE08ZSMED71	4189M	PAFSF403S34.5SU
3349121621	GE08ZSMEDCF	41DTMC400C45000	PAFSF404G1S
3349121623	GE08ZSMEDVITCF	41DTMC400C45000	PAFSF404G1SM
3349121628	GE08ZSR1/2ED71	41KFAW21MPN	PAFSF404G1SU
3349121631	GE08ZSR1/2EDCF	41KFAW21MPNS_01	PAFSF404GS
3349121633	GE08ZSR1/8EDCF	41KFAW21MVN	PAFSF404GSM
3349121661	GE08ZSR3/8ED71	41KFAW26MPN	PAFSF404GSU
3349121663	GE08ZSR3/8EDCF	41KFIM22MPN	PAFSF404S34.5S
3349121665	GE08ZSRED71	41KFIW21MPN	PAFSF404S34.5SM
3349121668	GE08ZSREDCF	41KFIW26MPN	PAFSF404S34.5SU
3349121672	GE08ZSREDVCF	41KFTF10MPN	PAFSF404S42.8S
3349121689	GE10L1/2NPT71	41KFTF13MPN	PAFSF404S42.8SM
3349121691	GE10L1/2NPT71X	41KFTF13MVN	PAFSF404S42.8SU
3349121692	GE10L1/2NPTCF	41KFTF16MPN	PAFSF405G114S
3349121693	GE10L1/2NPTCFX	41KFTF19MPN	PAFSF405G114SM
3349121698	GE10L1/2NPTMS	41SFAW17MXN	PAFSF405G114SU
3349121700	GE10L1/4NPT71	41SFAW21MXN	PAFSF405GS
3349121713	GE10L1/4NPT71X	41SFAW26MXN	PAFSF405GSM
3349121714	GE10L1/4NPTCF	41SFIM22MXN	PAFSF405GSU
3349121726	GE10L1/4NPTCFX	41SFIW21MXC	PAFSF405S42.8S
3349121734	GE10L1/4NPTDPR71CF	41SFIW21MXN	PAFSF405S42.8SM

3349121736	GE10L1/4NPTMS	41SFIW26MXN	PAFSF405S42.8SU
3349121739	GE10L1/4NPTMSX	41SFTF08MXN	PAFSF405S48.6S
3349121742	GE10L1/8NPT71	41SFTF10MXN	PAFSF405S48.6SM
3349121751	GE10L1/8NPT71X	41SFTF13MXN	PAFSF405S48.6SU
3349121752	GE10L1/8NPTCF	41SFTF16MXN	PAFSF406G112S
3349121757	GE10L1/8NPTCFX	41SFTF19MXN	PAFSF406G112SM
3349121760	GE10L1/8NPTMS	41TTFC060P10000	PAFSF406G112SU
3349121762	GE10L3/4NPT71	41TTFC060P10000	PAFSF406GS
3349121763	GE10L3/4NPT71X	4-2 B2HF-SS	PAFSF406GSM
3349121769	GE10L3/4NPTCF	4-2 CBZ-B	PAFSF406GSU
3349122002	GE10L3/4UNFOMDCF	4-2 CBZ-SS	PAFSF406S48.6S
3349122017	GE10L3/8NPT71	4-2 DBZ-SS	PAFSF406S48.6SM
3349122032	GE10L3/8NPT71X	4-2 ELZ-SS	PAFSF406S48.6SU
3349122036	GE10L3/8NPTCF	4-2 FBMP7-SS	PAFSF406S61.0S
3349122049	GE10L3/8NPTCFX	4-2 FBZ-B	PAFSF406S61.0SM
3349122053	GE10L3/8NPTMS	4-2 FBZ-SS	PAFSF406S61.0SU
3349122056	GE10L3/8NPTMSX	4-2 FE-SS	PAG-10A-NBR
3349122068	GE10L7/16UNF71	4-2 FH2BZ-SS	PAG-10A-NBR
3349122082	GE10L7/16UNF71X	4-2 FH4BZ-SS	PAG-10A-SI
3349122091	GE10L7/16UNFCF	4-2 FHC-625	PAG-10A-SI
3349122103	GE10L7/16UNFOMDCF	4-2 FHC-B	PAG-15A-NBR
3349122106	GE10L7/16UNFVITOMDCF	4-2 FHC-HC	PAG-15A-NBR
3349122107	GE10L9/16UNFCF	4-2 FHC-SS	PAG-15A-SI
3349122108	GE10L9/16UNFOMDCF	4-2 FHC-SSHP	PAG-15A-SI
3349122119	GE10L9/16UNFVOMDCF	4-2 GBZ-B	PAG-20A-NBR
3349122124	GE10LL1/4NPTCF	4-2 GBZ-SS	PAG-20A-NBR
3349122140	GE10LLR71	4-2 GH2BZ-SS	PAG-20A-SI
3349122142	GE10LLRCF	4-2 HBZ-B	PAG-20A-SI
3349122143	GE10LLRCFX	4-2 HBZ-SS	PAG-25-NBR
3349122148	GE10LLRMS	4-2 HTX-S	PAG-25-NBR
3349122149	GE10LM10X171	4-2 MHN-SS	PAG-25-SI
3349122151	GE10LM10X171X	4-2 MHN-SSHP	PAG-25-SI
3349122157	GE10LM10X1CF	4-2 RA-B	PAG-30-NBR
3349122200	GE10LM10X1CFX	4-2 RA-SS	PAG-30-NBR
3349122208	GE10LM10X1EDOMDCF	4-2 RA-SSHP	PAG-30-SI
3349122213	GE10LM10X1EDVITCF	4-2 RB-B	PAG-30-SI
3349122227	GE10LM10X1EDVOMDCF	4-2 RB-HC	PAG-40-NBR
3349122228	GE10LM12EDDPR71CF	4-2 RB-HC	PAG-40-NBR
3349122234	GE10LM12EDVITOMDCF	4-2 RB-S	PAG-40-SI
3349122240	GE10LM12X1.571	4-2 RB-SS	PAG-40-SI
3349122241	GE10LM12X1.571X	4-2 RB-SSHP	PAG-50-NBR
3349122244	GE10LM12X1.5CF	4-2 SE-B	PAG-50-NBR
3349122252	GE10LM12X1.5CFX	4-2 SE-SS	PAG-50-SI
3349122256	GE10LM12X1.5ED71	4-2 T2HF-B	PAG-50-SI
3349122262	GE10LM12X1.5EDCF	4-2 T2HF-SS	PAGL102G14S
3349122263	GE10LM12X1.5EDOMD71	4-2 T2HG-B	PAGL102M10S
3349122266	GE10LM12X1.5EDOMDCF	4-2 T2HG-SS	PAGL104G14S
3349122269	GE10LM12X1.5EDVITCF	4-2 TRBZ-B	PAGL104M10S
3349122270	GE10LM14X1.5KEGCFX	4-2 TRBZ-SS	PAGL104M10SS
3349122273	GE10LM16EDCF	4-2 TRTX-S	PAGL106G14S
3349122274	GE10LM16EDVITOMDCF	4-2 VBZ-SS	PAGL106G14SS
3349122279	GE10LM16EDVOMDCF	4-2 WBZ-SS	PAGL106M10S
3349122280	GE10LM16X1.571	4-2 XHBZ-SS	PAGL108G14S

3349122281	GE10LM16X1.571X	4-2 ZH2LX-SS-D950373	PAGL108G14SS
3349122283	GE10LM16X1.5ACFX	4-2 ZHBF5-SS	PAGL108M10S
3349122288	GE10LM16X1.5CF	420-000004	PAGL110G14S
3349122296	GE10LM16X1.5CFX	420-000005	PAGL110M10S
3349122310	GE10LM16X1.5ED71	420-000006	PAGL112G14S
3349122311	GE10LM16X1.5EDCF	420-000011	PAGL112M10S
3349122315	GE10LM16X1.5EDOMD71	420-000016	PAGL114G14S
3349122323	GE10LM16X1.5EDOMDCF	420-000031	PAGL114M10S
3349122325	GE10LM18EDCF	420-000034	PAGL116G14S
3349122337	GE10LM18EDVOMDCF	420-000041	PAGL116M10S
3349122340	GE10LM18X1.571	420-000051	PAGL118G14S
3349122349	GE10LM18X1.571X	4200-40-00170-0000-000000	PAGL118M10S
3349122350	GE10LM18X1.5CF	4200-40-00170-0000-000000	PAGL401G14S
3349122351	GE10LM18X1.5CFX	4200-40-00200-0000-000000	PAGL402G14S
3349122363	GE10LM18X1.5EDCF	4200-40-00200-0000-000000	PAGL403G14CF
3349122367	GE10LM18X1.5EDOMD71	4200-40-00220-0000-000000	PAGL403G14S
3349122368	GE10LM18X1.5EDOMDCF	4200-40-00220-0000-000000	PAGL403M10S
3349122377	GE10LM22DPR71CF	4200-40-00250-0000-000000	PAGL404G14CF
3349124002	GE10LM22EDDPR71CF	4200-40-00250-0000-000000	PAGL404G14S
3349124015	GE10LM22X1.571	4200-40-00280-0000-000000	PAGL404M10S
3349124030	GE10LM22X1.571X	4200-40-00280-0000-000000	PAGL404UN9/16S
3349124033	GE10LM22X1.5CF	4200-40-00285-0000-000000	PAGL405G14S
3349125024	GE10LM22X1.5CFX	4200-40-00285-0000-000000	PAGL405M10S
3349131002	GE10LM22X1.5ED71	4200-40-00350-0000-000000	PAGL406G14S
3349131004	GE10LM22X1.5EDCF	4200-40-00350-0000-000000	PAGL406M10S
3349131014	GE10LM22X1.5EDOMD71	4200-40-00370-0000-0000B2	PAGL408G14S
3349131052	GE10LM22X1.5EDOMDCF	4200-40-00370-0000-0000B2	PAGL408M10S
3349131057	GE10LM22X1.5MS	4200-40-00375-0000-000000	PAGL410G14S
3349131058	GE10LM71	4200-40-00375-0000-000000	PAGL410M10S
3349131059	GE10LM71X	4200-40-00380-0000-000000	PARFLAREECO230V
3349131069	GE10LMA71X	4200-40-00380-0000-000000	PATM10
3349131075	GE10LMACF	4200-40-00400-0000-000000	PATM12
3349131082	GE10LMACFX	4200-40-00400-0000-000000	PATM16
3349131094	GE10LMAX	4200-40-00450-0000-000000	PATM-20A-SI-G1
3349131095	GE10LMCF	4200-40-00450-0000-000000	PATM-20A-SI-G1
3349131103	GE10LMCFX	4200-40-00500-0000-000000	PATM22
3349131106	GE10LMDPR71CF	4200-40-00500-0000-000000	PATM25
3349131112	GE10LMED71	4200-40-00515-0000-000000	PAX-CN90L0
3349131113	GE10LMEDCF	4200-40-00515-0000-000000	PAX-CN90L0
3349131116	GE10LMEDDPR71CF	4200-40-00530-0000-000000	PAX-M1112
3349131121	GE10LMEDOMD71	4200-40-00530-0000-000000	PAX-M1112
3349131122	GE10LMEDOMDCF	4200-40-00550-0000-000000	PAX-M1115
3349131131	GE10LMEDSA388OMDCF	4200-40-00550-0000-000000	PAX-M1115
3349131134	GE10LMEDVCF	4200-40-00560-0000-000000	PB03249-000
3349131135	GE10LMEDVITCF	4200-40-00560-0000-000000	PB03249-000
3349131141	GE10LMEDVITOMDCF	4200-40-00570-0000-000000	PB10349-022
3349131151	GE10LMMS	4200-40-00570-0000-000000	PB10349-022
3349131167	GE10LMMSX	4200-40-00575-0000-000000	PB10549-000
3349131168	GE10LMSA182CFX	4200-40-00575-0000-000000	PB10549-000
3349131174	GE10LMSA335CFX	4200-40-00575-3000-000000	PB10549-010
3349132025	GE10LMSA385OMDCF	4200-40-00575-3000-000000	PB10549-010
3349132031	GE10LR	4200-40-00575-3000-000022	PB10549-100
3349132034	GE10LR1/271	4200-40-00575-3000-000022	PB10549-100

3349132037	GE10LR1/271X	4200-40-00600-0000-000000	PB11G04DJCSS
3349132040	GE10LR1/2CF	4200-40-00600-0000-000000	PB11G04DJCSS
3349132045	GE10LR1/2CFX	4200-40-00650-0000-000000	PB12G04DJCRSS
3349141005	GE10LR1/2DPR71CF	4200-40-00650-0000-000000	PB12G04DJCRSS
3349141010	GE10LR1/2ED71	4200-40-00660-0000-000000	PB12G04DJCSS
3349141014	GE10LR1/2EDCF	4200-40-00660-0000-000000	PB12G04DJCSS
3349210017	GE10LR1/2EDDPR71CF	4200-40-00700-0000-000000	PB12G04WGDRSS
3349210032	GE10LR1/2EDMS	4200-40-00700-0000-000000	PB12G04WGDRSS
3349210046	GE10LR1/2EDNBROMD71	4200-40-00710-0000-010000	PB13049-000
3349210051	GE10LR1/2EDOMD71	4200-40-00710-0000-010000	PB13049-000
3349210052	GE10LR1/2EDOMDCF	4200-40-00715-0000-000000	PB13149-000
3349210063	GE10LR1/2EDOMDMS	4200-40-00715-0000-000000	PB13149-000
3349210069	GE10LR1/2EDVITCF	4200-40-00715-3000-010000	PB13149-008
3349210099	GE10LR1/2EDVOMDCF	4200-40-00715-3000-010000	PB13149-008
3349210104	GE10LR1/2KEG71	4200-40-00748-0000-000000	PB13249-000
3349210108	GE10LR1/2KEGCF	4200-40-00748-0000-000000	PB13249-000
3349210111	GE10LR1/2KEGCFX	4200-40-00750-0000-000000	PB13449-005
3349211016	GE10LR1/2MS	4200-40-00750-0000-000000	PB13449-005
3349211026	GE10LR1/2MSX	4200-40-00775-0000-000000	PB13549-007
3349211034	GE10LR1/2SPH71	4200-40-00775-0000-000000	PB13549-007
3349211041	GE10LR1/4KEG71	4200-40-00800-0000-000000	PB13549-055
3349211049	GE10LR1/4KEG71X	4200-40-00800-0000-000000	PB13549-055
3349211058	GE10LR1/4KEGCF	4200-40-00800-B000-000000	PB13649-005
3349211069	GE10LR1/4KEGCFX	4200-40-00800-B000-000000	PB13649-005
3349211070	GE10LR1/4KEGMS	4200-40-00825-0000-000000	PB13649-007
3349211074	GE10LR1/4KEGMSX	4200-40-00825-0000-000000	PB13649-007
3349211084	GE10LR1/871	4200-40-00850-0000-000000	PB13649-044
3349211088	GE10LR1/871X	4200-40-00850-0000-000000	PB13649-044
3349211091	GE10LR1/8CF	4200-40-00860-0000-000000	PB15549-008
3349211105	GE10LR1/8CFX	4200-40-00860-0000-000000	PB15549-008
3349211107	GE10LR1/8ED71	4200-40-00870-3000-000000	PB21600-045
3349211108	GE10LR1/8EDCF	4200-40-00870-3000-000000	PB21600-045
3349211119	GE10LR1/8EDOMD71	4200-40-00900-0000-000000	PB21605-520
3349211126	GE10LR1/8EDOMDCF	4200-40-00900-0000-000000	PB21605-520
3349211141	GE10LR1/8EDVOMDCF	4200-40-00950-0000-000000	PB21607-120
3349211142	GE10LR1/8KEGCF	4200-40-00950-0000-000000	PB21607-120
3349211144	GE10LR1/8KEGCFX	4200-40-00965-0000-000000	PB21607-121
3349211148	GE10LR1/8MS	4200-40-00965-0000-000000	PB21607-121
3349211149	GE10LR3/4EDOMDCF	4200-40-00980-0000-000000	PB2160K-508
3349211152	GE10LR3/871	4200-40-00980-0000-000000	PB2160K-508
3349211165	GE10LR3/871X	4200-40-01000-0000-000000	PB2160K-520
3349211166	GE10LR3/8ACF	4200-40-01000-0000-000000	PB2160K-520
3349211167	GE10LR3/8ACFX	4200-40-01030-0000-000000	PB2160K-555
3349211169	GE10LR3/8CF	4200-40-01030-0000-000000	PB2160K-555
3349211172	GE10LR3/8CFX	4200-40-01050-0000-000000	PB2160K-600
3349211175	GE10LR3/8DMSCF	4200-40-01050-0000-000000	PB2160K-600
3349211179	GE10LR3/8DPR71CF	4200-40-01100-0000-000000	PB2160M-084
3349211186	GE10LR3/8ED71	4200-40-01100-0000-000000	PB2160M-084
3349211199	GE10LR3/8EDCF	4200-40-01200-0000-000000	PB2160M-085
3349211210	GE10LR3/8EDDPR71CF	4200-40-01200-0000-000000	PB2160M-085
3349211217	GE10LR3/8EDMS	4200-40-01250-0000-000000	PB2160M-109
3349211218	GE10LR3/8EDNBROMD71	4200-40-01250-0000-000000	PB2160M-109
3349211224	GE10LR3/8EDOMD71	4200-40-01300-0000-000000	PB2160S-505

3349211232	GE10LR3/8EDOMDCF	4200-40-01300-0000-000000	PB2160S-505
3349212025	GE10LR3/8EDOMDMS	4200-40-01300-B000-000000	PB2160T-010
3349212026	GE10LR3/8EDVITCF	4200-40-01300-B000-000000	PB2160T-010
3349212027	GE10LR3/8EDVOMDCF	4200-40-01350-0000-000000	PB2160Y-525
3349212050	GE10LR3/8KEG71	4200-40-01350-0000-000000	PB2160Y-525
3349212058	GE10LR3/8KEG71X	4200-40-01360-0000-000000	PB21611-523
3349212069	GE10LR3/8KEGCF	4200-40-01360-0000-000000	PB21611-523
3349212070	GE10LR3/8KEGCFX	4200-40-01400-0000-000000	PB21614-520
3349212071	GE10LR3/8KEGMS	4200-40-01400-0000-000000	PB21614-520
3349212082	GE10LR3/8MS	4200-40-01420-3000-000000	PB21630-078
3349212083	GE10LR3/8MSX	4200-40-01420-3000-000000	PB21630-078
3349212085	GE10LR71	4200-40-01440-0000-000000	PB21649-010
3349212095	GE10LR71X	4200-40-01440-0000-000000	PB21649-010
3349212101	GE10LRA71X	4200-40-01450-0000-000000	PB21649-010EX
3349212111	GE10LRACF	4200-40-01450-0000-000000	PB21649-010EX
3349214015	GE10LRACFX	4200-40-01500-0000-000000	PB21649-015
3349214023	GE10LRCF	4200-40-01500-0000-000000	PB21649-015
3349214034	GE10LRCFX	4200-40-01520-0000-000000	PB21649-017
3349214035	GE10LRDPR71CF	4200-40-01520-0000-000000	PB21649-017
3349214044	GE10LRDPR71MS	4200-40-01550-0000-000000	PB21649-020
3349214045	GE10LRED71	4200-40-01550-0000-000000	PB21649-020
3349214046	GE10LREDCF	4200-40-01600-0000-000000	PB21649-023
3349214050	GE10LREDDPR71CF	4200-40-01600-0000-000000	PB21649-023
3349214054	GE10LREDEPDM71	4200-40-02000-0000-000000	PB21649-026
3349214055	GE10LREDI8OMDCF	4200-40-02000-0000-000000	PB21649-026
3349214056	GE10LREDMS	4200-40-02500-0000-000000	PB21649-027
3349214057	GE10LREDNBROMD71	4200-40-02500-0000-000000	PB21649-027
3349214060	GE10LREDOMD71	420-100103	PB21649-030
3349214064	GE10LREDOMD71BP	420-100105	PB21649-030
3349215002	GE10LREDOMDCF	420-100107	PB21649-031
3349215015	GE10LREDOMDMS	420-100112	PB21649-031
3349215026	GE10LREDVITCF	420-100122	PB21649-033
3349215042	GE10LREDVITOMDCF	420-100421	PB21649-033
3349215043	GE10LREDVITOMDMS	420-100422	PB21649-046
3349215044	GE10LRMS	420-100423	PB21649-046
3349218025	GE10LRMSX	420-100715	PB21649-053
3349218031	GE10LRSA342OMDCF	420-100716	PB21649-053
3349218032	GE10LRSPH71	420-100718	PB21649-054
3349218035	GE10S1/2NPT71	420-100721	PB21649-054
3349218043	GE10S1/2NPT71X	420-100722	PB21649-054
3349218044	GE10S1/2NPTCF	420-100724	PB21649-054
3349218045	GE10S1/2NPTCFX	420-100726	PB21649-056
3349218046	GE10S1/2NPTMS	420-100727	PB21649-056
3349218052	GE10S1/4NPT71	420-100737	PB21649-059
3349218055	GE10S1/4NPT71X	420-100760	PB21649-059
3349218058	GE10S1/4NPTCF	420-100761	PB21649-059
3349218060	GE10S1/4NPTCFX	420-100762	PB21649-059
3349218061	GE10S3/4NPT71X	420-100763	PB21649-081
3349218067	GE10S3/4NPTCF	420-100765	PB21649-081
3349218071	GE10S3/4NPTCFX	420-100770	PB21649-088
3349218074	GE10S3/8NPT71	420-100772	PB21649-088
3349218076	GE10S3/8NPT71X	420-100774	PB21649-089
3349218078	GE10S3/8NPTCF	420-100779	PB21649-089

3349218079	GE10S3/8NPTCFX	420-100780	PB21649-090
3349218086	GE10S9/16UNF71	420-100781	PB21649-090
3349218087	GE10S9/16UNFCF	420-100788	PB21649-101
3349218089	GE10S9/16UNFOMD71	420-101842	PB21649-101
3349218093	GE10S9/16UNFOMD71N	420-101852	PB21649-111
3349218094	GE10S9/16UNFOMDCF	420-101865	PB21649-111
3349218095	GE10SM12X1.5CF	4202 10 17 20	PB21649-112
3349218096	GE10SM14EDOMDCF	4202 10 17 30	PB21649-112
3349218098	GE10SM18X1.5EDCF	4202 15 21 20	PB21649-115
3349218100	GE10SM71	4202 15 21 30	PB21649-115
3349218104	GE10SM71X	4202 20 27 20	PB21649-116
3349218105	GE10SMCF	4202 20 27 30	PB21649-116
3349218112	GE10SMCFX	4202 25 34 20	PB21649-118
3349218113	GE10SMED71	4202 25 34 30	PB21649-118
3349218121	GE10SMEDCF	4202 32 42 20	PB21649-125
3349219009	GE10SMEDOMD71	4202 32 42 30	PB21649-125
3349219031	GE10SMEDOMDCF	4202 40 49 20	PB21649-126
3349219033	GE10SMEDSTOSSORCF	4202 40 49 30	PB21649-126
3349219034	GE10SMEDVITCF	4202 50 48 20	PB21649-127
3349219057	GE10SMEDVITOMDCF	4202 50 48 30	PB21649-127
3349219072	GE10SMMS	4203 10 18 20	PB21649-128
3349219074	GE10SMSTOSS71	4212 10 17 20	PB21649-128
3349219082	GE10SMSTOSSCF	4212 10 17 30	PB21649-129
3349219083	GE10SMSTOSSCFX	4212 15 21 20	PB21649-129
3349219084	GE10SR1/271	4212 15 21 30	PB21649-131
3349219085	GE10SR1/271X	4212 20 27 20	PB21649-131
3349219109	GE10SR1/2ACF	4212 20 27 30	PB21649-132
3349219115	GE10SR1/2CF	4212 25 34 20	PB21649-132
3349219117	GE10SR1/2CFX	4212 25 34 30	PB21649-212
3349219118	GE10SR1/2ED71	4212 32 42 20	PB21649-212
3349219119	GE10SR1/2EDCF	4212 32 42 30	PB21649-213
3349219120	GE10SR1/2EDOMD71	4212 40 49 20	PB21649-213
3349219121	GE10SR1/2EDOMDCF	4212 40 49 30	PB21649-305
3349219122	GE10SR1/2EDOMDCN	4212 50 48 20	PB21649-305
3349219123	GE10SR1/2EDOMDMS	4212 50 48 30	PB21649-307
3349219124	GE10SR1/2EDVOMDCF	421F35	PB21649-307
3349219128	GE10SR1/2MS	421F35	PB21649-500
3349219134	GE10SR1/2MSX	421F35-2995-481865C2	PB21649-500
3349219148	GE10SR1/471	421F35-2995-481865C2	PB21649-502
3349219149	GE10SR1/471X	421F35-2995-492425C2	PB21649-502
3349219155	GE10SR1/4CF	421F35-2995-492425C2	PB21649-506
3349219158	GE10SR1/4CFX	421RH-20	PB21649-506
3349219166	GE10SR1/4ED71	421RH-24	PB21649-507
3349219170	GE10SR1/4EDCF	421RH-32	PB21649-507
3349219176	GE10SR1/4EDOMD71	421SN-10	PB21649-508
3349219177	GE10SR1/4EDOMD71N	421SN-12	PB21649-508
3349219178	GE10SR1/4EDOMDCF	421SN-16	PB21649-520
3349219179	GE10SR1/4EDVITCF	421SN-20	PB21649-520
3349219182	GE10SR1/4EDVOMDCF	421SN-24	PB21649-525
3349219190	GE10SR1/4KEGCF	421SN-32	PB21649-525
3349219191	GE10SR1/4MS	421SN-4	PB21649-527
3349219195	GE10SR1/8EDOMDCF	421SN-5	PB21649-527
3349219196	GE10SR3/8KEGCF	421SN-6	PB21649-531

3349219202	GE10SR3/8KEGCFX	421SN-8	PB21649-531
3349219203	GE10SR3/8KLBLKOELX	421WC-12	PB21649-550
3349219209	GE10SR71	421WC-16	PB21649-550
3349219210	GE10SR71X	421WC-4	PB21649-554
3349219213	GE10SRAMSX	421WC-6	PB21649-554
3349219214	GE10SRCF	421WC-8	PB21649-600
3349219216	GE10SRCFX	422-10	PB21649-600
3349219219	GE10SRED71	422-12	PB21649-800
3349219220	GE10SREDCF	422-16	PB21649-800
3349219221	GE10SREDMS	4222 10 17 20	PB21649-800
3349219247	GE10SREDOMD71	4222 10 17 30	PB21649-800
3349219248	GE10SREDOMD71N	4222 15 21 20	PB21649-803
3349219252	GE10SREDOMDCF	4222 15 21 30	PB21649-803
3349219253	GE10SREDVITCF	4222 20 27 20	PB21649-804
3349219254	GE10SREDVITOMDCF	4222 20 27 30	PB21649-804
3349219256	GE10SRMS	4222 25 34 20	PB21649-N010
3349219260	GE10SRMSX	4222 25 34 30	PB21649-N010
3349219264	GE10SRSPH71	4222 32 42 20	PB21649-N017
3349219269	GE10SRSTOSSCF	4222 32 42 30	PB21649-N017
3349219287	GE10ZL1/2NPT71	4222 40 49 20	PB21649-N500
3349219291	GE10ZL1/4NPT71	4222 40 49 30	PB21649-N500
3349219292	GE10ZL1/4NPTCF	4222 50 48 20	PB216NN-500
3349219293	GE10ZL3/8NPTCF	4222 50 48 30	PB216NN-500
3349219295	GE10ZL7/16UNFCF	422-20	PB2170E-N509
3349219296	GE10ZL7/16UNFVITCF	422-24	PB2170E-N509
3349219311	GE10ZLM10X1EDCF	4222FIL	PB2170K-520
3349219314	GE10ZLM12EDSSACF	4222FIL	PB2170K-520
3349219315	GE10ZLM12EDVITCF	422-32	PB2170K-600
3349219316	GE10ZLM12X1.5ED71	422-4	PB2170K-600
3349219317	GE10ZLM12X1.5EDCF	422-5	PB2170S-505
3349219337	GE10ZLM16EDCF	422-6	PB2170S-505
3349219356	GE10ZLM16EDSSACF	422-8	PB21730-547
3349219363	GE10ZLM16X1.5ED71	4-2-4 MBZ-SS	PB21730-547
3349219382	GE10ZLM18EDCF	4-2-4 RBZ-B	PB21730-548
3349219383	GE10ZLM22X1.5EDCF	4-2-4 RBZ-SS	PB21730-548
3349219399	GE10ZLMED71	4-24 ZHLS-SS	PB21749-006
3349219406	GE10ZLMEDCF	4241.P	PB21749-006
3349219408	GE10ZLMEDSSACF	424-16	PB21749-010
3349219413	GE10ZLMEDVITCF	424-20	PB21749-010
3349219419	GE10ZLMEDVITSSACF	424-24	PB21749-010EX
3349219430	GE10ZLR1/2ED71	4243 00 00 01	PB21749-010EX
3349219437	GE10ZLR1/2EDCF	4243 00 15 20	PB21749-015
3349219438	GE10ZLR1/2EDSSACF	4243 00 15 30	PB21749-015
3349219439	GE10ZLR1/8ED71	4243 00 25 20	PB21749-017
3349219442	GE10ZLR1/8EDCF	4243 00 50 20	PB21749-017
3349219444	GE10ZLR1/8EDNBR71	424-300114	PB21749-032
3349219448	GE10ZLR3/8ED71	424-300503	PB21749-032
3349219453	GE10ZLR3/8EDCF	424-300514	PB21749-067
3349219455	GE10ZLR3/8EDVITCF	424-300516	PB21749-067
3349219456	GE10ZLRED71	424-301010	PB21749-070
3349219472	GE10ZLREDCF	424-32	PB21749-070
3349219473	GE10ZLREDSSACF	424-400010	PB21749-070
3349219474	GE10ZLREDVCF	424-600603	PB21749-070

3349219493	GE10ZLREDVITCF	424-600604	PB21749-082
3349219495	GE10ZS3/8NPTCF	424-600705	PB21749-082
3349219505	GE10ZS9/16UNFCF	424-600706	PB21749-088
3349219508	GE10ZSMED71	424-600800	PB21749-088
3349219519	GE10ZSMEDCF	424-600805	PB21749-092
3349520007	GE10ZSR1/2ED71	4246FIL	PB21749-092
3349520015	GE10ZSR1/2EDCF	4246FIL	PB21749-110
3349520022	GE10ZSR1/2EDNBR71	4248FIL	PB21749-110
3349520024	GE10ZSR1/2EDVITCF	4248FIL	PB21749-130
3349520029	GE10ZSR1/4ED71	4249FIL	PB21749-130
3349520033	GE10ZSR1/4EDCF	4249FIL	PB21749-500
3349521003	GE10ZSR1/4EDNBR71	426-10-RL	PB21749-500
3349521012	GE10ZSR1/4EDVITCF	426-12-RL	PB21749-508
3349521014	GE10ZSRED71	426-16-RL	PB21749-508
3349521020	GE10ZSREDCF	426-20	PB21749-525
3349521022	GE10ZSREDNBR71	426-24	PB21749-525
3349521025	GE10ZSREDVITCF	426-32	PB21749-536
3349521026	GE12L1/2NPT71	426-4-RL	PB21749-536
3349521031	GE12L1/2NPT71X	426-6-RL	PB21749-554
3349521034	GE12L1/2NPTCF	426-8-RL	PB21749-554
3349521041	GE12L1/2NPTCFX	4271-01610	PB21749-700
3349521043	GE12L1/2NPTDPR71CF	4271-01610	PB21749-700
3349521048	GE12L1/2NPTMS	4271FIL	PB21749-800
3349521053	GE12L1/2NPTSPH71	4271FIL	PB21749-800
3349521056	GE12L1/4NPT71	427FIL	PB21749-800
3349521060	GE12L1/4NPT71X	427FIL	PB21749-800
3349521061	GE12L1/4NPTCF	4-2829S	PB21749-806
3349521065	GE12L1/4NPTCFX	4282W	PB21749-806
3349521066	GE12L1/4NPTDPR71CF	4292FIL	PB21749-852
3349521067	GE12L1/4NPTMS	4292FIL	PB21749-852
3349521071	GE12L1/4NPTSPH71	4295FIL	PB21749-853
3349522005	GE12L1/8NPT71	4295FIL	PB21749-853
3349530001	GE12L1/8NPT71X	4298 00 01	PB21749-N015
3349530004	GE12L1/8NPTCFX	4298 01 01	PB21749-N015
3349530005	GE12L3/4NPT71	4298 01 02	PB21749-N506
3349530007	GE12L3/4NPTCF	4298 02 01	PB21749-N506
3349530008	GE12L3/4NPTCFX	4298 02 02	PB21750-N010
3349530009	GE12L3/4NPTDPR71CF	4298FIL	PB21750-N010
3349531008	GE12L3/4UNF71	4298FIL	PB23649-015
3349531011	GE12L3/4UNFCF	4299 01 01	PB23649-015
3349531014	GE12L3/4UNFOMD71	4299 01 02	PB23730-017
3349531019	GE12L3/4UNFOMDCF	4299 02 01	PB23730-017
3349532001	GE12L3/8NPT71	4299 02 02	PB3090U-050
3349550001	GE12L3/8NPT71X	4-2HMK4S	PB3090U-050
3349560001	GE12L3/8NPTCF	4-2HMK4SS	PB30949-020
3349610007	GE12L3/8NPTCFX	4-2HMTXSS	PB30949-020
3349611005	GE12L3/8NPTMS	4-2K FBZ-SS	PB30949-030
3349611011	GE12L7/16UNFCF	4-2K GBZ-SS	PB30949-030
3349611014	GE12L7/16UNFCFX	4-2K T2HF-SS	PB30949-040
3349611015	GE12L7/16UNFOMDCF	4-2K T2HG-SS	PB30949-040
3349611071	GE12L7/8UNF71	42KAIW21MPC	PB30949-051
3349611077	GE12L7/8UNFCF	42KFAW21MPC	PB30949-051
3349611078	GE12L7/8UNFCFX	42KFAW26MPC	PB35049-000

3349611084	GE12L7/8UNFOMD71	42KFIW21MPC	PB35049-000
3349611087	GE12L7/8UNFOMDCF	42KFIW26MEC	PB35049-000
3349612048	GE12L9/16UNF71	42KFIW26MPC	PB35049-000
3349612051	GE12L9/16UNFCF	42KFTF09MPC	PB35149-000
3349621018	GE12L9/16UNFOMD71	42KFTF13MPC	PB35149-000
3349621022	GE12L9/16UNFOMDCF	42KFTF19MPC	PB35249-000
3349621023	GE12LLR3/871	4-2MHN-825	PB35249-000
3349621024	GE12LLR3/8CF	4-2R CBZ-SS	PB35249-000
3349621027	GE12LLR3/8CFX	4-2R FBZ-SS	PB35249-000
3450500004	GE12LLR3/8MS	4-2RB-6MO	PB35349-000
3459100119	GE12LLR3/8MSX	4-2RB-825	PB35349-000
3459100142	GE12LLR71	42SFAW21MXC	PB35349-000
3459149001	GE12LLRCF	42SFAW26MXC	PB35349-000
3459149002	GE12LLRCFX	42SFIW21MXC	PB35449-000
3459149003	GE12LLRMS	42SFIW26MXC	PB35449-000
3459149101	GE12LM12X1.5CF	42SFTF09MXC	PB35449-000
3459149105	GE12LM12X1.5CFX	42SFTF10MXC	PB35449-000
3459149110	GE12LM12X1.5EDCF	42SFTF13MXC	PB35530-001
3459149126	GE12LM12X1.5EDOMD71	42SFTF19MXC	PB35530-001
3459149131	GE12LM12X1.5EDOMDCF	4-2TRMTXSS	PB35549-000
3459149143	GE12LM12X1.5EDVITCF	4-3 HBZ-SS	PB35549-000
3459500190	GE12LM12X1.5EDVOMDCF	4-3 HTX-S	PB35549-000
3459500192	GE12LM14EDCF	4-3 TRBZ-SS	PB35549-000
3460300093	GE12LM14EDVOMDCF	4300-40-00150-3000-000000	PB36949-000
3460310330	GE12LM14X1.571	4300-40-00150-3000-000000	PB36949-000
3460500005	GE12LM14X1.571X	4300-40-00150-3010-000000	PB37349-000
3460500067	GE12LM14X1.5CF	4300-40-00150-3010-000000	PB37349-000
3460500146	GE12LM14X1.5CFX	4300-40-00300-0000-000000	PB37349-000
3460500151	GE12LM14X1.5EDCF	4300-40-00300-0000-000000	PB37349-000
3460500152	GE12LM14X1.5EDOMD71	4300-40-00400-0000-000000	PB3740K-004
3460500298	GE12LM14X1.5EDOMDCF	4300-40-00400-0000-000000	PB3740K-004
3460500366	GE12LM16X1.5KEG71	4300-40-00500-0000-000000	PB37449-000
3460500434	GE12LM18EDVOMDCF	4300-40-00500-0000-000000	PB37449-000
3460501131	GE12LM18X1.571	4300-40-00600-0000-000000	PB37849-000
3460505459	GE12LM18X1.571X	4300-40-00600-0000-000000	PB37849-000
3460506324	GE12LM18X1.5ACF	4300-40-00630-0000-000000	PB3790K-004
3460506377	GE12LM18X1.5CF	4300-40-00630-0000-000000	PB3790K-004
3460506386	GE12LM18X1.5CFX	4300-40-00700-0000-000000	PB4000K-150
3460509210	GE12LM18X1.5ED71	4300-40-00700-0000-000000	PB4000K-150
3460509939	GE12LM18X1.5EDCF	4300-40-00700-0010-000000	PB4000K-225
3460510984	GE12LM18X1.5EDOMD71	4300-40-00700-0010-000000	PB4000K-225
3469000137	GE12LM18X1.5EDOMDCF	4300-40-00795-0000-000000	PB4000K-250
3469000159	GE12LM18X1.5EDVITCF	4300-40-00795-0000-000000	PB4000K-250
3469001002	GE12LM18X1.5KEG71X	4300-40-00800-0000-000000	PB40030-131
3469002001	GE12LM22EDVOMDCF	4300-40-00800-0000-000000	PB40030-131
3469002003	GE12LM22X1.571	4300-40-00800-1000-000000	PB40030-133
3469002007	GE12LM22X1.571X	4300-40-00800-1000-000000	PB40030-133
3469003001	GE12LM22X1.5ACFX	4300-40-00800-1001-000000	PB40034-117
3469100117	GE12LM22X1.5CF	4300-40-00800-1001-000000	PB40034-117
3469100139	GE12LM22X1.5CFX	4300-40-00900-0000-000000	PB40049-100
3469100167	GE12LM22X1.5ED71	4300-40-00900-0000-000000	PB40049-100
3469102214	GE12LM22X1.5EDCF	4300-40-00960-0000-000000	PB40049-101
3469106002	GE12LM22X1.5EDOMD71	4300-40-00960-0000-000000	PB40049-101

3469106121	GE12LM22X1.5EDOMDCF	4300-40-01000-0000-000000	PB40049-101
3469142144	GE12LM71	4300-40-01000-0000-000000	PB40049-101
3469142145	GE12LM71X	4300-40-01000-1000-000000	PB40049-102
3469149003	GE12LMACF	4300-40-01000-1000-000000	PB40049-102
3469149103	GE12LMACFVOLX	4300-40-01000-7000-000000	PB40049-116
3469149107	GE12LMACFX	4300-40-01000-7000-000000	PB40049-116
3469149108	GE12LMAVMECFX	4300-40-01050-0000-000000	PB40049-116
3469149112	GE12LMCF	4300-40-01050-0000-000000	PB40049-116
3469149113	GE12LMCFX	4300-40-01400-0000-000000	PB40049-126
3469149114	GE12LMED71	4300-40-01400-0000-000000	PB40049-126
3469149115	GE12LMEDCF	4300-40-01400-1000-000000	PB40049-129
3469149172	GE12LMEDOMD71	4300-40-01400-1000-000000	PB40049-129
3469149179	GE12LMEDOMDCF	4300-40-02182-0000-000000	PB40049-200
3469149185	GE12LMEDSA381OMDCF	4300-40-02182-0000-000000	PB40049-200
3469149201	GE12LMEDVITCF	4300-40-03050-0000-000000	PB40105-121
3469149296	GE12LMEDVITOMDCF	4300-40-03050-0000-000000	PB40105-121
3469203116	GE12LMMS	43004L-200	PB4010C-N119
3469203168	GE12LR1/271	43004L-200	PB4010C-N119
3469203201	GE12LR1/271X	43004R-200	PB4010K-150
3469203209	GE12LR1/2A71	43004R-200	PB4010K-150
3469203214	GE12LR1/2ACF	43004S-100	PB4010K-250
3469203215	GE12LR1/2ACFX	43004S-100	PB4010K-250
3469205175	GE12LR1/2AVOLCFX	43007A	PB4010T-101
3469425301	GE12LR1/2CF	43007A	PB4010T-101
3469425302	GE12LR1/2CFX	430089W	PB4010Y-126
3469425303	GE12LR1/2DPR71CF	430089W	PB4010Y-126
3469425324	GE12LR1/2DPR71MS	430095W	PB40115-121
3500508063	GE12LR1/2ED71	430095W	PB40115-121
3509622005	GE12LR1/2EDCF	430096W	PB40118-045
3509622007	GE12LR1/2EDDPR71CF	430096W	PB40118-045
3509622014	GE12LR1/2EDMS	430137W	PB4011K-248
3509622017	GE12LR1/2EDNBROMD71	430137W	PB4011K-248
3509642038	GE12LR1/2EDOMD71	430138W	PB4011K-251
3509642047	GE12LR1/2EDOMDCF	430138W	PB4011K-251
3509732001	GE12LR1/2EDOMDMS	4310FIL	PB4011K-253
3509732004	GE12LR1/2EDVITCF	4310FIL	PB4011K-253
3509732016	GE12LR1/2EDVOMDCF	4320266/4	PB40130-208
3509732023	GE12LR1/2KEG71	4326FIL	PB40130-208
3509732027	GE12LR1/2KEG71X	4326FIL	PB40149-030
3509732028	GE12LR1/2KEGCF	4327FIL	PB40149-030
3509812003	GE12LR1/2KEGCFX	4327FIL	PB40149-100
3519001114	GE12LR1/2KEGMS	4329FIL	PB40149-100
3519120104	GE12LR1/2MS	4329FIL	PB40149-101
3520500005	GE12LR1/2MSX	4330FIL	PB40149-101
3529102324	GE12LR1/2SA29971	4330FIL	PB40149-101
3529102362	GE12LR1/2SPH71	4331FIL	PB40149-101
3529132140	GE12LR1/4	4331FIL	PB40149-102
3529132142	GE12LR1/471	4360-01133	PB40149-102
3529142120	GE12LR1/471X	4360-01133	PB40149-107
3529142122	GE12LR1/4A71	436-10-BLU-RL	PB40149-107
3529201118	GE12LR1/4ACF	436-12-BLU-RL	PB40149-110
3529203140	GE12LR1/4ACFX	436-16-BLU-RL	PB40149-110
3529203148	GE12LR1/4CF	436-6-BLU-RL	PB40149-116

3529203149	GE12LR1/4CFX	436-8-BLU-RL	PB40149-116
3559107385	GE12LR1/4DPR71CF	4372FIL	PB40149-116
3911401623	GE12LR1/4ED71	4372FIL	PB40149-116
3911402081	GE12LR1/4EDCF	4373FIL	PB40149-126
3911425507	GE12LR1/4EDDPR71CF	4373FIL	PB40149-126
3911425612	GE12LR1/4EDMS	4386FIL	PB40149-143
3911781103	GE12LR1/4EDNBROMD71	4386FIL	PB40149-143
3911781117	GE12LR1/4EDOMD71	4397FIL	PB40149-148
3911781118	GE12LR1/4EDOMD71BP	4397FIL	PB40149-148
3911801304	GE12LR1/4EDOMDCF	43CB16	PB40149-149
3911801335	GE12LR1/4EDVITCF	43CKO16	PB40149-149
3911801336	GE12LR1/4EDVOMDCF	43CL16	PB40149-154
3911801340	GE12LR1/4KEG71	43CN16010-316	PB40149-154
3911801410	GE12LR1/4KEG71X	43CN16012-316	PB40149-155
3911801451	GE12LR1/4KEGCF	43CN1606-304	PB40149-155
3911803542	GE12LR1/4KEGCFX	43CN1606-316	PB40149-200
3911803549	GE12LR1/4KEGMS	43CN1608-316	PB40149-200
3911822071	GE12LR1/4MS	43CP160	PB40149-202
3911822072	GE12LR1/4MSX	43CT16	PB40149-202
3911822073	GE12LR1/4SPH71	43CX16	PB40149-203
3911822101	GE12LR1/871	43F16	PB40149-203
3911822102	GE12LR1/871X	43F41633	PB40149-204
3911822170	GE12LR1/8CF	4-3F5OMXSS	PB40149-204
3911822254	GE12LR1/8CFX	43F61633	PB40149-205
3911822265	GE12LR1/8ED71	43F91633	PB40149-205
3911822474	GE12LR1/8EDCF	4-3HMTXSS	PB40149-207
3911822531	GE12LR1/8EDOMD71	43M164B3	PB40149-207
3911822617	GE12LR1/8EDOMDCF	43M166B3	PB40149-213
3911822618	GE12LR1/8EDVITCF	43M169B3	PB40149-213
3911822619	GE12LR1/8KEGCFX	43M416B3	PB40149-N116
3911822620	GE12LR171	43M616B3	PB40149-N116
3911822621	GE12LR1CFX	43M916B3	PB40199-N108
3911822622	GE12LR3/471	43SC16071	PB40199-N108
3911822623	GE12LR3/471X	43TC16	PB401NN-100
3911822624	GE12LR3/4ACFX	43UF16	PB401NN-100
3911822625	GE12LR3/4CF	43Y16071	PB40249-100
3911822626	GE12LR3/4CFX	4-4 B2HF-B	PB40249-100
3911822628	GE12LR3/4DPR71CF	4-4 B2HF-SS	PB402NN-100
3911822630	GE12LR3/4ED71	4-4 B2HT2-SS	PB402NN-100
3911822631	GE12LR3/4EDCF	4-4 C5BZ-SS	PB40305-120
3911822632	GE12LR3/4EDNBROMD71	4-4 CBMP7-SS	PB40305-120
3911822633	GE12LR3/4EDOMD71	4-4 CBU-S	PB4030J-124
3911822634	GE12LR3/4EDOMDCF	4-4 CBZ-B	PB4030J-124
3911822635	GE12LR3/4EDVOMDCF	4-4 CBZ-SS	PB4030K-120
3911822637	GE12LR3/4KEGCF	4-4 CCCTX-S	PB4030K-120
3911822638	GE12LR3/8KEG71	4-4 CCTX-S	PB40318-045
3911822639	GE12LR3/8KEG71X	4-4 CLO-S	PB40318-045
3911822720	GE12LR3/8KEGCF	4-4 CLO-S V0894	PB40349-100
3911822721	GE12LR3/8KEGCFX	4-4 CTX-B	PB40349-100
3911822722	GE12LR3/8KEGMS	4-4 CTX-S	PB40349-107
3911822723	GE12LR3/8KEGMSX	4-4 CTX-SS	PB40349-107
3911822724	GE12LR71	4-4 CW-SS	PB40349-120
3911822727	GE12LR71X	4-4 DBZ-B	PB40349-120

3911822728	GE12LRACF	4-4 DBZ-SS	PB403NN-100
3911822732	GE12LRACFVOLX	4-4 DTX-S	PB403NN-100
3911822733	GE12LRACFX	4-4 DTX-SS	PB4040K-153
3911822734	GE12LRCF	4-4 DW-SS	PB4040K-153
3911822735	GE12LRCFX	4-4 EBMP7-SS	PB40447-100
3911822736	GE12LRDPR71MS	4-4 EBZ-B	PB40447-100
3911822737	GE12LRED71	4-4 EBZ-SS	PB40449-100
3911822738	GE12LREDCF	4-4 F6X-S	PB40449-100
3911822741	GE12LREDD1.5OMDCF	4-4 FBMP7-SS	PB40449-100
3911822743	GE12LREDDPR71CF	4-4 FBU-S	PB40449-100
3911822799	GE12LREDMS	4-4 FBU-SS	PB40449-104
3911832063	GE12LREDNBROMD71	4-4 FBZ-B	PB40449-104
3911832071	GE12LREDOMD71	4-4 FBZ-SS	PB40449-109
3911832086	GE12LREDOMDCF	4-4 FE-6MO	PB40449-109
3911832087	GE12LREDOMDCFBP	4-4 FE-B	PB404NN-100
3911832133	GE12LREDOMDMS	4-4 FE-B-OXY	PB404NN-100
3911832143	GE12LREDVITCF	4-4 FE-HC	PB4050J-100
3911832144	GE12LREDVITOMDCF	4-4 FE-SS	PB4050J-100
3911832147	GE12LRMS	4-4 FE-SSHP	PB4050K-153
3911832151	GE12LRMSX	4-4 FH2BZ-SS	PB4050K-153
3911832154	GE12LRSPH71	4-4 FH4BZ-SS	PB40530-120
3911832155	GE12LRVOLCFX	4-4 FHC-6MO	PB40530-120
3911832156	GE12LUNFSA329CFX	4-4 FHC-B	PB40530-123
3911832157	GE12S1/2NPT71	4-4 FHC-HC	PB40530-123
3911832158	GE12S1/2NPT71X	4-4 FHC-SS	PB40549-100
3911832159	GE12S1/2NPTCF	4-4 FHC-SSHP	PB40549-100
3911832160	GE12S1/2NPTCFX	4-4 FHOA-SS	PB40549-100
3911832161	GE12S1/4NPT71	4-4 FLO-S	PB40549-100
3911832162	GE12S1/4NPT71X	4-4 FLO-SS	PB40549-104
3911832163	GE12S1/4NPTCF	4-4 FTX-S	PB40549-104
3911832165	GE12S1/4NPTCFX	4-4 FW-SS	PB40549-107
3911832177	GE12S3/4NPT71	4-4 G6X-S	PB40549-107
3911832178	GE12S3/4NPT71X	4-4 G6X-SS	PB40549-109
3911832179	GE12S3/4NPTCF	4-4 GBMP7-SS	PB40549-109
3911832182	GE12S3/4NPTCFX	4-4 GBU-S	PB40549-121
3911832187	GE12S3/4UNF71	4-4 GBU-SS	PB40549-121
3911832188	GE12S3/4UNFCF	4-4 GBZ-B	PB40549-122
3911832189	GE12S3/4UNFOMD71	4-4 GBZ-SS	PB40549-122
3911832190	GE12S3/4UNFOMDCF	4-4 GH2BZ-SS	PB40549-125
3911832192	GE12S3/8NPT71	4-4 GTX-S	PB40549-125
3911832193	GE12S3/8NPT71X	4-4 GW-SS	PB40549-126
3911832194	GE12S3/8NPTCF	4-4 HBMP7-SS	PB40549-126
3911832195	GE12S3/8NPTCFX	4-4 HBZ-B	PB40549-148
3911832196	GE12S7/8UNFOMDCF	4-4 HBZ-SS	PB40549-148
3911832198	GE12S9/16UNFCF	4-4 MCN-B	PB40549-148
3911832290	GE12S9/16UNFOMD71	4-4 MCN-SS	PB40549-148
3911832291	GE12S9/16UNFOMDCF	4-4 ME-B	PB40549-N100
3911832334	GE12SM12X1.5CFX	4-4 ME-SS	PB40549-N100
3911832335	GE12SM12X1.5EDOMD71	4-4 ME-SSHP	PB40549-N109
3911832336	GE12SM14SA274CF	4-4 MHLN-3.0-SSHP	PB40549-N109
3911832337	GE12SM14X1.571	4-4 MHLN-4.0-SSHP	PB40649-100
3911832338	GE12SM14X1.5CF	4-4 MHLN-625 2.0	PB40649-100
3911832339	GE12SM14X1.5CFX	4-4 MHLN-625 2.5	PB40649-101

3911832340	GE12SM14X1.5ED71	4-4 MHLN-625 3.0	PB40649-101
3911832341	GE12SM14X1.5EDCF	4-4 MHLN-625 4.0	PB40649-102
3911832342	GE12SM14X1.5EDOMD71	4-4 MHLN-6MO 2.0	PB40649-102
3911832396	GE12SM14X1.5EDOMDCF	4-4 MHLN-6MO 3.0	PB40649-116
3911832397	GE12SM14X1.5EDVITCF	4-4 MHLN-6MO 4.0	PB40649-116
3911832468	GE12SM16EDOMDCF	4-4 MHLN-B 2.5	PB40649-N100
3911832511	GE12SM16EDVITOMDCF	4-4 MHLN-B 3.0	PB40649-N100
3911832577	GE12SM16X1.5CF	4-4 MHLN-HC 3.0	PB40705-120
3911832578	GE12SM16X1.5CFX	4-4 MHLN-HC 4.0	PB40705-120
3911832579	GE12SM16X1.5EDOMD71	4-4 MHLN-M 3.0	PB4070K-136
3911832581	GE12SM20X1.5CFX	4-4 MHLN-M 4.0	PB4070K-136
3911832582	GE12SM22X1.571	4-4 MHLN-SS 1.5	PB4070Y-126
3911832583	GE12SM22X1.5CF	4-4 MHLN-SS 2.0	PB4070Y-126
3911832584	GE12SM22X1.5CFX	4-4 MHLN-SS 2.5	PB40747-120
3911832598	GE12SM22X1.5EDCF	4-4 MHLN-SS 3.0	PB40747-120
3911832610	GE12SM22X1.5EDOMD71	4-4 MHLN-SS 4.0	PB40749-100
3911832696	GE12SM22X1.5EDOMDCF	4-4 MHLN-SS 6.0	PB40749-100
3911832698	GE12SM71	4-4 MHN-625	PB40749-101
3911832704	GE12SM71X	4-4 MHN-B	PB40749-101
3911832716	GE12SMACFX	4-4 MHNK-SSHP	PB40749-102
3911832766	GE12SMCF	4-4 MHN-M	PB40749-102
3911832770	GE12SMCFX	4-4 MHNR-SS	PB40749-116
3911832772	GE12SMED71	4-4 MHN-SS	PB40749-116
3911832783	GE12SMEDCF	4-4 MHN-SSHP	PB40749-120
3911832810	GE12SMEDOMD71	4-4 MP7PC-SS	PB40749-120
3911832811	GE12SMEDOMDCF	4-4 P2HF-SS	PB40749-130
3911832812	GE12SMEDSTOSSOR71	4-4 P2LZ6-SS	PB40749-130
3911832879	GE12SMEDVITOMDCF	4-4 RA-625	PB40749-131
3911832891	GE12SMMS	4-4 RA-B	PB40749-131
3911832892	GE12SMSTOSS71	4-4 RA-M	PB40749-135
3911832893	GE12SR1/231BOFF71	4-4 RA-SS	PB40749-135
3911832894	GE12SR1/271	4-4 RA-SSHP	PB40749-N100
3911832895	GE12SR1/271X	4-4 SE-B	PB40749-N100
3911832896	GE12SR1/2ACF	4-4 SE-SS	PB40749-N116
3911832949	GE12SR1/2ACFX	4-4 SVE-B	PB40749-N116
3911832972	GE12SR1/2AMSX	4-4 SVE-SS	PB407NN-100
3911842189	GE12SR1/2CF	4-4 T2H2BZ-SS	PB407NN-100
3911842244	GE12SR1/2CFX	4-4 T2HF-B	PB40849-100
3911842272	GE12SR1/2ED71	4-4 T2HF-SS	PB40849-100
3911842285	GE12SR1/2EDCF	4-4 T2HG-B	PB40849-104
3911842351	GE12SR1/2EDOMD71	4-4 T2HG-SS	PB40849-104
3912080080	GE12SR1/2EDOMDCF	4-4 TRBZ-SS	PB40849-107
3912183232	GE12SR1/2EDVITCF	4-4 V5BZ-SS	PB40849-107
3912183238	GE12SR1/2EDVOMDCF	4-4 VBZ-SS	PB40849-110
3912185109	GE12SR1/2KEG71X	4-4 VTX-S	PB40849-110
3912281010	GE12SR1/2MS	4-4 VTX-SS	PB408NN-100
3912281012	GE12SR1/2MSX	4-4 WBMP7-SS	PB408NN-100
3912282082	GE12SR1/2OFF71	4-4 WBZ-B	PB40947-100
3912282117	GE12SR1/2SPH71	4-4 WBZ-SS	PB40947-100
3912286004	GE12SR1/471	4-4 WGTX-S	PB40949-100
3912681362	GE12SR1/471X	4-4 WGTX-WLN-S	PB40949-100
3912686016	GE12SR1/4CF	4-4 X41HBMP7-SS	PB40949-100
3912686063	GE12SR1/4CFX	4-4 X42HBMP7-SS	PB40949-100

3912881118	GE12SR1/4ED71	4-4 X6HBZ6-SS	PB40949-104
3912881122	GE12SR1/4EDCF	4-4 XH2BZ-SS	PB40949-104
3912881138	GE12SR1/4EDNBROMD71	4-4 XHBZ-SS	PB40949-107
3912881363	GE12SR1/4EDOMD71	4-4 ZEBW-SS	PB40949-107
3912881437	GE12SR1/4EDOMDCF	4-4 ZELW-SS	PB40949-110
3912881611	GE12SR1/4EDVITCF	4-4 ZH3LA-SS	PB40949-110
3912881965	GE12SR1/4EDVOMDCF	4-4 ZHBA5-SS	PB40949-N100
3912882148	GE12SR1/4MS	4-4 ZHBA-SS	PB40949-N100
3912882168	GE12SR3/471	4-4 ZHBF5-SS	PB40949-N123
3912882181	GE12SR3/4CFX	4-4 ZHBW-SS	PB40949-N123
3912882182	GE12SR3/4EDCF	4-4 ZHLW-SS	PB409NN-100
3912882184	GE12SR3/4EDOMD71	4-4 ZPC-B	PB409NN-100
3912882219	GE12SR3/4EDOMDCF	4-4 ZPC-SS	PB44149-030
3912882491	GE12SR71	4-400	PB44149-030
3912883058	GE12SR71X	4400-40-00150-0000-000000	PB45049-000
3912883104	GE12SRCF	4400-40-00150-0000-000000	PB45049-000
3912883111	GE12SRCFX	4400-40-00320-0000-000000	PB45049-001
3912883115	GE12SRED71	4400-40-00320-0000-000000	PB45049-001
3912883119	GE12SREDCF	4400-40-00400-0000-000000	PB45049-002
3912883178	GE12SREDNBROMD71	4400-40-00400-0000-000000	PB45049-002
3912883193	GE12SREDOMD71	4400-40-00600-0000-000000	PB45049-004
3912883206	GE12SREDOMDCF	4400-40-00600-0000-000000	PB45049-004
3912883232	GE12SREDVITCF	4400-40-00650-0000-000000	PB45049-016
3912883252	GE12SREDVITOMDCF	4400-40-00650-0000-000000	PB45049-016
3912883253	GE12SRMS	4400-40-00700-0000-000000	PB45049-070
3912883254	GE12SRSTOSS71	4400-40-00700-0000-000000	PB45049-070
3913381040	GE12SRSTOSSCF	4400-40-00705-0000-000000	PB45049-N000
3919997022	GE12ZL1/4NPT71	4400-40-00705-0000-000000	PB45049-N000
3919997058	GE12ZL1/4NPTCF	4400-40-00800-0000-000000	PB45049-N004
3919997089	GE12ZL1/4NPTVITCF	4400-40-00800-0000-000000	PB45049-N004
4079010000	GE12ZL3/4UNFCF	4400-40-00900-0000-000000	PB45049-N070
4079010001	GE12ZL3/4UNFVITCF	4400-40-00900-0000-000000	PB45049-N070
4079010003	GE12ZL3/8NPT71	4400-40-01000-0000-000000	PB450NN-000
4079010004	GE12ZL7/8UNFCF	4400-40-01000-0000-000000	PB450NN-000
4079010005	GE12ZL7/8UNFVITCF	4400-40-01700-0000-000000	PB4510E-001
4145059480	GE12ZL9/16UNFCF	4400-40-01700-0000-000000	PB4510E-001
4145059480	GE12ZLM14EDVITCF	4400-40-01925-0000-000000	PB4510G-011
4145059580	GE12ZLM14X1.5EDCF	4400-40-01925-0000-000000	PB4510G-011
4145059580	GE12ZLM18X1.5EDCF	4400-40-02442-0000-000000	PB4510G-016
4145064590	GE12ZLM22X1.5ED71	4400-40-02442-0000-000000	PB4510G-016
4145064590	GE12ZLM22X1.5EDCF	4400-40-03500-0000-012000	PB4510G-027
4180502147	GE12ZLM8X1EDCF	4400-40-03500-0000-012000	PB4510G-027
6084000001	GE12ZLMED71	4400-40-04350-0000-000000	PB4510H-001
6084000005	GE12ZLMEDCF	4400-40-04350-0000-000000	PB4510H-001
6084000006	GE12ZLR1/2ED71	4401-00414	PB4510W-001
7020040000	GE12ZLR1/2EDCF	4401-00414	PB4510W-001
7020040002	GE12ZLR1/2EDVITCF	4401-00910	PB45130-002
7020040004	GE12ZLR1/2KEGCF	4401-00910	PB45130-002
7020040009	GE12ZLR1/4ED71	4401-01000	PB45149-000
7020040010	GE12ZLR1/4EDCF	4401-01000	PB45149-000
7020040011	GE12ZLR1/4EDNBR71	4401-01064	PB45149-000
7020040013	GE12ZLR1/4EDVITCF	4401-01064	PB45149-000
7020040014	GE12ZLR1/8ED71	4401-01144	PB45149-001

7020075002	GE12ZLR1/8EDCF	4401-01144	PB45149-001
7020075006	GE12ZLR3/4ED71	4401-01380	PB45149-002
7020075007	GE12ZLR3/4EDCF	4401-01380	PB45149-002
7021010000	GE12ZLRED71	4401-01604	PB45149-003
7021010002	GE12ZLREDCF	4401-01604	PB45149-003
7021010003	GE12ZLREDVITCF	4401-01680	PB45149-003EX
7021010006	GE12ZS3/4UNFCF	4401-01680	PB45149-003EX
7021010007	GE12ZS9/16UNFCF	4402 07 13	PB45149-004
7021010008	GE12ZSM14X1.5EDCF	4402 10 17	PB45149-004
7021010010	GE12ZSM22X1.5EDCF	4402 13 21	PB45149-004EX
7021020000	GE12ZSMED71	4402-00300	PB45149-004EX
7021020001	GE12ZSMEDCF	4402-00300	PB45149-007
7021020004	GE12ZSR1/2ED71	4402-00400	PB45149-007
7021020008	GE12ZSR1/2EDCF	4402-00400	PB45149-016
7021020009	GE12ZSR1/2EDVITCF	4402-00450	PB45149-016
7021020011	GE12ZSR1/4ED71	4402-00450	PB45149-018EX
7021020014	GE12ZSR1/4EDCF	4402-01175	PB45149-018EX
7021723800	GE12ZSR1/4EDVCF	4402-01175	PB45149-027
7022003001	GE12ZSR3/4EDCF	4403-00450	PB45149-027
7022003002	GE12ZSRED71	4403-00450	PB45149-046
7022003004	GE12ZSREDCF	4403-00500	PB45149-046
7022003006	GE12ZSREDVITCF	4403-00500	PB45149-048
7022003008	GE14S1/2NPT71	4403-00800	PB45149-048
7022003010	GE14S1/2NPT71X	4403-00800	PB45149-049
7022003012	GE14S1/2NPTCF	4403-03120	PB45149-049
7022006000	GE14S1/2NPTCFX	4403-03120	PB45149-060
7022006001	GE14S1NPT71X	4404-00500	PB45149-060
7022006002	GE14S1NPTCFX	4404-00500	PB45149-070
7022006003	GE14S3/4NPT71	4404-00600	PB45149-070
7022006004	GE14S3/4NPT71X	4404-00600	PB45149-071
7022006005	GE14S3/4NPTCF	4404-00800	PB45149-071
7022006007	GE14S3/4NPTCFX	4404-00800	PB45149-102
7022006008	GE14S3/8NPT71	4404-01144	PB45149-102
7022006010	GE14S3/8NPT71X	4404-01144	PB45149-N000
7022006011	GE14S3/8NPTCF	4404-01380	PB45149-N000
7022006019	GE14S3/8NPTCFX	4404-01380	PB45149-N003
7022010000	GE14SM16X1.5EDOMD71	4404-03000	PB45149-N003
7022010001	GE14SM71	4404-03000	PB45149-N016
7022010002	GE14SM71X	4404-06900	PB45149-N016
7022010003	GE14SMCF	4404-06900	PB45149-N102
7022010004	GE14SMCFX	4405-01100	PB45149-N102
7022010005	GE14SMED71	4405-01100	PB451NN-001
7022010007	GE14SMEDCF	4405-01200	PB451NN-001
7022010008	GE14SMEDOMD71	4405-01200	PB451NN-016
7022010014	GE14SMEDOMDCF	441-10	PB451NN-016
7022010015	GE14SMEDSTOSSORCF	441-10-RL	PB45200-030
7022010019	GE14SMSTOSS71	441-12	PB45200-030
7022020000	GE14SR1/471	441-12-RL	PB45203-026
7022020001	GE14SR1/4EDOMD71	441-16	PB45203-026
7022020002	GE14SR3/471	4411FIL	PB4520G-027
7022020003	GE14SR3/4ED71	4411FIL	PB4520G-027
7022020004	GE14SR3/4EDOMD71	4412FIL	PB4520G-048
7022020005	GE14SR3/4EDOMDCF	4412FIL	PB4520G-048

7022020006	GE14SR3/871	4413FIL	PB4520G-050
7022020009	GE14SR3/871X	4413FIL	PB4520G-050
7022020011	GE14SR3/8CF	441-4	PB4520K-000
7022020012	GE14SR3/8CFX	4414FIL	PB4520K-000
7022020014	GE14SR3/8ED71	4414FIL	PB4520T-001
7022020015	GE14SR3/8EDCF	441-4-RL	PB4520T-001
7022020017	GE14SR3/8EDOMD71	441-5	PB4520Y-029
7022744000	GE14SR3/8EDOMDCF	4415FIL	PB4520Y-029
7022836000	GE14SR3/8MS	4415FIL	PB45230-024
7025006000	GE14SR71	441-5-RL	PB45230-024
7025006002	GE14SR71X	441-6	PB45249-000
7025006006	GE14SRCF	441-6-RL	PB45249-000
7025015000	GE14SRCFX	441-8	PB45249-001
7025015005	GE14SRED71	441-8-RL	PB45249-001
7025015011	GE14SREDCF	441RH-10	PB45249-002
7026003000	GE14SREDOMD71	441RH-12	PB45249-002
7026003001	GE14SREDOMDCF	441RH-16	PB45249-002
7026003003	GE14SRMS	441RH-4	PB45249-002
7026003005	GE14SRSTOSS71	441RH-5	PB45249-003
7026003009	GE14ZSMEDCF	441RH-6	PB45249-003
7026003010	GE14ZSR3/4ED71	441RH-8	PB45249-004
7026015000	GE14ZSR3/8ED71	4-4-2 JLZ-B	PB45249-004
7026015002	GE14ZSR3/8EDCF	4-4-2 JLZ-SS	PB45249-004EX
7026015005	GE14ZSRED71	4-4-2 OBZ-SS	PB45249-004EX
7026015006	GE14ZSREDCF	4-4-2 SBZ-SS	PB45249-007
7026015008	GE14ZSREDNBR71	4421FIL	PB45249-007
7026015010	GE15L1/2NPT71	4421FIL	PB45249-016
7027003000	GE15L1/2NPT71X	4422FIL	PB45249-016
7027003002	GE15L1/2NPTCF	4422FIL	PB45249-027
7027003004	GE15L1/2NPTCFX	4423FIL	PB45249-027
7027010002	GE15L1/2NPTMS	4423FIL	PB45249-036
7027010008	GE15L1/2NPTVOLCFX	4424FIL	PB45249-036
7027020011	GE15L1/4NPTCFX	4424FIL	PB45249-048
7027020012	GE15L11/16UNCF	4425FIL	PB45249-048
7028003001	GE15L11/16UNOMDCF	4425FIL	PB45249-049
7028006000	GE15L1NPT71	442KLJKX-A3XD	PB45249-049
7028006001	GE15L1NPT71X	442XBAHP-W3XQ	PB45249-070
7028010000	GE15L1NPTCF	442XQAHX-A3XD	PB45249-070
7028010001	GE15L3/4NPT71	442XQAHX-A3XY	PB45249-073
7028010002	GE15L3/4NPT71X	4431FIL	PB45249-073
7028020000	GE15L3/4NPTCF	4431FIL	PB45249-078
7028020002	GE15L3/4NPTCFX	443776W	PB45249-078
7029110006	GE15L3/4UNF71	443776W	PB45249-082
7029110009	GE15L3/4UNFCF	443777W	PB45249-082
7029110011	GE15L3/4UNFOMD71	443777W	PB45249-102
7029110017	GE15L3/4UNFOMDCF	443778W	PB45249-102
7029110021	GE15L3/4UNFVITOMDCF	443778W	PB45249-N001
7029110026	GE15L3/8NPT71	443779W	PB45249-N001
7029110033	GE15L3/8NPT71X	443779W	PB452NN-001
7029110034	GE15L3/8NPTCF	443780W	PB452NN-001
7029110043	GE15L3/8NPTCFX	443780W	PB4530G-000
7029110046	GE15L3/8NPTDPR71CF	443781W	PB4530G-000
7029110048	GE15L3/8NPTMSX	443781W	PB45316-200

7029110049	GE15L7/8UNFCF	443782W	PB45316-200
7029110072	GE15L7/8UNFOMDCF	443782W	PB45349-000
7029110073	GE15L7/8UNFVITOMDCF	443783W	PB45349-000
7029111001	GE15L9/16UNFOMDCF	443783W	PB45349-000EX
7029111003	GE15LEDCP301672CFVO	443784W	PB45349-000EX
7029111004	GE15LM12EDOMDCF	443784W	PB45349-006
7029111017	GE15LM14EDVITOMDCF	443785W	PB45349-006
7029111018	GE15LM14X1.571X	443785W	PB45349-006
7029111020	GE15LM14X1.5CFX	443786W	PB45349-006
7029111021	GE15LM14X1.5EDOMDCF	443786W	PB45349-058
7029111030	GE15LM16EDVOMDCF	443787W	PB45349-058
7029111032	GE15LM16EDVOMDCFVOL	443787W	PB45349-080
7029111044	GE15LM16X1.5CF	443788W	PB45349-080
7029111045	GE15LM16X1.5CFX	443788W	PB45349-150
7029111048	GE15LM16X1.5EDCF	443789W	PB45349-150
7029111051	GE15LM16X1.5EDOMD71	443789W	PB45349-N006
7029111052	GE15LM16X1.5EDOMDCF	443790W	PB45349-N006
7029111053	GE15LM20X1.5EDOMDCF	443790W	PB4540E-000
7029111054	GE15LM22EDDPR71CF	443791W	PB4540E-000
7029111057	GE15LM22EDVOMDCF	443791W	PB4540G-000
7029111059	GE15LM22X1.571	443792W	PB4540G-000
7029111061	GE15LM22X1.571X	443792W	PB4540G-010
7029111063	GE15LM22X1.5CF	443793W	PB4540G-010
7029111066	GE15LM22X1.5CFX	443793W	PB4540G-058
7029111070	GE15LM22X1.5DPR71CF	443794W	PB4540G-058
7029111072	GE15LM22X1.5ED71	443794W	PB4540H-000
7029111073	GE15LM22X1.5EDCF	443796W	PB4540H-000
7029111075	GE15LM22X1.5EDOMD71	443796W	PB4540K-000
7029111076	GE15LM22X1.5EDOMDBL71	443797W	PB4540K-000
7029111079	GE15LM22X1.5EDOMDCF	443797W	PB4540K-006
7029111086	GE15LM22X1.5EDVITCF	443798W	PB4540K-006
7029111087	GE15LM26X1.5ACFX	443798W	PB4540K-100
7029111088	GE15LM26X1.5EDCF	443799W	PB4540K-100
7029111089	GE15LM26X1.5EDOMDCF	443799W	PB4540K-120
7029111091	GE15LM27X2EDOMDCF	443800W	PB4540K-120
7029111093	GE15LM71	443800W	PB4540K-200
7029111094	GE15LM71X	443801W	PB4540K-200
7029111097	GE15LMCF	443801W	PB4540S-070
7029111098	GE15LMCFX	443802W	PB4540S-070
7029111109	GE15LMDPR71CF	443802W	PB4540T-025
7029111110	GE15LMDPR71MS	443803W	PB4540T-025
7029111112	GE15LMED71	443803W	PB4540Y-026
7029111117	GE15LMEDCF	443804W	PB4540Y-026
7029111124	GE15LMEDMS	443804W	PB45411-044
7029111134	GE15LMEDOMD71	443805W	PB45411-044
7029111138	GE15LMEDOMDCF	443805W	PB45416-200
7029111146	GE15LMEDOMDCFBP	443806W	PB45416-200
7029111150	GE15LMEDVITCF	443806W	PB4541P-000
7029111153	GE15LMEDVITOMDCF	443807W	PB4541P-000
7029111156	GE15LMEDVOMDVOLCF	443807W	PB45420-054
7029111161	GE15LMMS	443808W	PB45420-054
7029111167	GE15LR	443808W	PB45427-011
7029111168	GE15LR1/2KEG71	443809W	PB45427-011

7029111178	GE15LR1/2KEG71X	443809W	PB4542F-054
7029111186	GE15LR1/2KEGCF	443811W	PB4542F-054
7029111188	GE15LR1/2KEGCFX	443811W	PB45430-100
7029111194	GE15LR1/2KEGMS	4-4-4 FT-625	PB45430-100
7029111196	GE15LR1/2KEGMSX	4-4-4 FT-6MO	PB45430-140
7029111206	GE15LR1/471	4-4-4 FT-B	PB45430-140
7029111207	GE15LR1/4CF	4-4-4 FT-M	PB45430-215
7029111208	GE15LR1/4CFX	4-4-4 FT-SS	PB45430-215
7029111215	GE15LR1/4EDCF	4-4-4 FT-SSHP	PB45430-223
7029111230	GE15LR1/4EDOMD71	4-4-4 FT-TI	PB45430-223
7029111239	GE15LR1/4EDOMDCF	4-4-4 JBMP7-SS	PB45448-209
7029111241	GE15LR1/4EDOMDMS	4-4-4 JBZ-B	PB45448-209
7029111251	GE15LR11/4EDCF	4-4-4 JBZ-SS	PB45449-000
7029111252	GE15LR1ED71	4-4-4 MBT-SS	PB45449-000
7029111256	GE15LR1EDVITOMDCF	4-4-4 MBZ-SS	PB45449-000EX
7029111268	GE15LR3/471	4-4-4 MT-B	PB45449-000EX
7029111276	GE15LR3/471X	4-4-4 MT-SS	PB45449-006
7029111284	GE15LR3/4CF	4-4-4 MT-SSHP	PB45449-006
7029111287	GE15LR3/4CFX	4-4-4 MTX-SS	PB45449-006EX
7029111288	GE15LR3/4DPR71CF	4-4-4 OBZ-SS	PB45449-006EX
7029111291	GE15LR3/4ED71	4-4-4 OTX-SS	PB45449-009
7029112039	GE15LR3/4EDCF	4-4-4 R5BZ-SS	PB45449-009
7029112042	GE15LR3/4EDOMD71	4-4-4 RBZ-B	PB45449-009
7029112046	GE15LR3/4EDOMDCF	4-4-4 RBZ-SS	PB45449-009
7029112048	GE15LR3/4EDOMDMS	4-4-4 RTX-S	PB45449-010
7029112052	GE15LR3/4EDVOMDCF	4-4-4 RTX-SS	PB45449-010
7029112054	GE15LR3/4KEGCFX	4-4-4 SBMP7-SS	PB45449-010EX
7029112062	GE15LR3/4MS	4-4-4 SBU-S	PB45449-010EX
7029112070	GE15LR3/4MSX	4-4-4 SBZ-B	PB45449-011
7029112074	GE15LR3/871	4-4-4 SBZ-SS	PB45449-011
7029112075	GE15LR3/871X	4-4-4 ST-B	PB45449-021
7029112090	GE15LR3/8ACFX	4-4-4 ST-SS	PB45449-021
7029112098	GE15LR3/8CF	4-4-4 STX-S	PB45449-026
7029112105	GE15LR3/8CFX	4-4-4 STX-SS	PB45449-026
7029112107	GE15LR3/8DPR71CF	4441FIL	PB45449-027
7029112115	GE15LR3/8DPR71MS	4441FIL	PB45449-027
7029112117	GE15LR3/8ED71	4443FIL	PB45449-030
7029112119	GE15LR3/8EDCF	4443FIL	PB45449-030
7029112121	GE15LR3/8EDDPR71CF	444494W	PB45449-031
7029112125	GE15LR3/8EDMS	444494W	PB45449-031
7029112143	GE15LR3/8EDOMD71	444497W	PB45449-033
7029112148	GE15LR3/8EDOMDCF	444497W	PB45449-033
7029112150	GE15LR3/8EDOMDMS	444499W	PB45449-036
7029112151	GE15LR3/8EDVITCF	444499W	PB45449-036
7029112161	GE15LR3/8EDVOMDCF	4444FIL	PB45449-040
7029112192	GE15LR3/8KEG71	4444FIL	PB45449-040
7029113005	GE15LR3/8KEG71X	444500W	PB45449-041
7029113913	GE15LR3/8KEGCF	444500W	PB45449-041
7029113914	GE15LR3/8KEGCFX	4445FIL	PB45449-042
7029113915	GE15LR3/8KEGMS	4445FIL	PB45449-042
7029113916	GE15LR3/8KEGMSX	4447R	PB45449-049
7029113917	GE15LR3/8MS	4-4-4R4OMLOS	PB45449-049
7029113921	GE15LR3/8MSX	4-4-4R4OMXS	PB45449-050

7029113923	GE15LR71	4-4-4S4OMLOS	PB45449-050
7029113924	GE15LR71X	445R10	PB45449-058
7029113925	GE15LRACFX	445R10MTC	PB45449-058
7029113926	GE15LRCF	445R1230	PB45449-060
7029113927	GE15LRCFX	445R1230MTC	PB45449-060
7029115003	GE15LRDPR71CF	445R30	PB45449-066
7029115004	GE15LRDPR71MS	445R30MTC	PB45449-066
7029115005	GE15LRED71	4-4-6 S5OLO-S	PB45449-070
7029120005	GE15LREDCF	4461FIL	PB45449-070
7029120006	GE15LREDDPR71CF	4461FIL	PB45449-070EX
7029120020	GE15LREDMS	446-707-025	PB45449-070EX
7029120023	GE15LREDNBROMD71	446-707-025	PB45449-075
7029120025	GE15LREDOMD71	446-707-045	PB45449-075
7029120039	GE15LREDOMD71BP	446-707-045	PB45449-080
7029120047	GE15LREDOMDCF	4-4-6R6MLOS	PB45449-080
7029120067	GE15LREDOMDMS	4-4-6S5OMLOS	PB45449-080EX
7029121002	GE15LREDVITCF	449-00517-0	PB45449-080EX
7029121004	GE15LREDVITOMDCF	449-01015-8	PB45449-083
7029121019	GE15LRMS	449-01048-8	PB45449-083
7029121033	GE15LRMSX	4-4C3MXS	PB45449-097
7029121038	GE15LRSPH71	4-4C3MXSS	PB45449-097
7029121044	GE15LRSTOSSCF	4-4C4MXS	PB45449-098
7029121045	GE15ZL1/2NPTCF	4-4C4OMLOS	PB45449-098
7029121049	GE15ZL3/4UNFCF	4-4C4OMLOSEPDM	PB45449-100
7029121066	GE15ZL3/4UNFVITCF	4-4C4OMLOSS	PB45449-100
7029121079	GE15ZL3/8NPTCF	4-4C4OMXS	PB45449-106
7029121083	GE15ZL7/8UNFCF	4-4C4OMXSS	PB45449-106
7029121110	GE15ZLM16EDCF	4-4CMTXSS	PB45449-110
7029121117	GE15ZLM16X1.5EDCF	4-4F3MK4S	PB45449-110
7029121120	GE15ZLM22X1.5ED71	4-4F3MK4SS	PB45449-127
7029121122	GE15ZLM22X1.5EDCF	4-4F3MXS	PB45449-127
7029121130	GE15ZLMED71	4-4F3MXSS	PB45449-150
7029121142	GE15ZLMEDCF	4-4F42EDMLOS	PB45449-150
7029121149	GE15ZLMEDNBR71	4-4F42EDMLOSBP	PB45449-150EX
7029121154	GE15ZLR1/2KEGCF	4-4F42EDMLOSEPDM	PB45449-150EX
7029121158	GE15ZLR3/4ED71	4-4F42EDMLOSS	PB45449-151
7029121162	GE15ZLR3/4EDCF	4-4F42EDMLOSSV	PB45449-151
7029121164	GE15ZLR3/4EDVCF	4-4F42EDMLOSV	PB45449-152
7029121165	GE15ZLR3/4EDVSSACF	4-4F42EDMXS	PB45449-152
7029121171	GE15ZLR3/8ED71	4-4F42EDMXSBP	PB45449-158
7029121175	GE15ZLR3/8EDCF	4-4F42EDMXSS	PB45449-158
7029121178	GE15ZLR3/8EDVCF	4-4F42EDMXSSV	PB45449-200
7029122001	GE15ZLRED71	4-4F4MXS	PB45449-200
7029122011	GE15ZLREDCF	4-4F4OMXB	PB45449-212
7029122021	GE15ZLREDSSACF	4-4F4OMXS	PB45449-212
7029122022	GE15ZLREDVITCF	4-4F4OMXSS	PB45449-212
7029122023	GE16S1/2NPT71	4-4F4OMXSV	PB45449-212
7029122029	GE16S1/2NPT71X	4-4F63MXS	PB45449-252
7029122039	GE16S1/2NPTCF	4-4F63MXSS	PB45449-252
7029122042	GE16S1/2NPTCFX	4-4F642EDMLS	PB45449-302
7029122046	GE16S1/2NPTMS	4-4F642EDMLSSVCAP	PB45449-302
7029122051	GE16S1/2NPTMSX	4-4F642EDMXS	PB45449-N000
7029122052	GE16S11/16UNOMDCF	4-4F642EDMXSBP	PB45449-N000

7029122059	GE16S1NPT71X	4-4F642EDMXSS	PB45449-N006
7029122065	GE16S1NPTCF	4-4F64OMXS	PB45449-N006
7029122070	GE16S1NPTCFX	4-4F6MK4S	PB45449-N031
7029132006	GE16S3/4NPT71	4-4F6MK4SS	PB45449-N031
7029132008	GE16S3/4NPT71X	4-4F6MXSS	PB45449-N070
7029132009	GE16S3/4NPTCF	4-4FMK4S	PB45449-N070
7029210070	GE16S3/4NPTCFX	4-4FMK4SS	PB45449-N084
7029211005	GE16S3/4UNF71	4-4FMTXB	PB45449-N084
7029211012	GE16S3/4UNFCF	4-4FMTXS	PB45449-N100
7029211023	GE16S3/4UNFOMD71	4-4FMTXSS	PB45449-N100
7029211031	GE16S3/4UNFOMDCF	4-4G4MK4S	PB45449-N150
7029214004	GE16S3/8NPT71	4-4G4MLOSMO	PB45449-N150
7029215003	GE16S3/8NPT71X	4-4G4MLOSSMO	PB454NN-000
7029218002	GE16S3/8NPTCF	4-4G4MLSMO	PB454NN-000
7029218006	GE16S3/8NPTCFX	4-4G4MXBMO	PB45503-039
7029218010	GE16S7/8UNF71	4-4G4MXS	PB45503-039
7029218011	GE16S7/8UNFCF	4-4G4MXSMO	PB4550G-000
7029218013	GE16S7/8UNFOMD71	4-4G4MXSS	PB4550G-000
7029218015	GE16S7/8UNFOMDCF	4-4G4MXSSMO	PB4550G-058
7029218017	GE16SM14X1.5CFX	4-4GC GBZ-SS	PB4550G-058
7029218018	GE16SM16EDOMDCF	4-4GMTXB	PB4550K-000
7029218020	GE16SM18X1.571X	4-4GMTXS	PB4550K-000
7029218023	GE16SM18X1.5CF	4-4GMTXSS	PB4550K-200
7029218025	GE16SM18X1.5CFX	4-4K CBZ-SS	PB4550K-200
7029219003	GE16SM18X1.5ED71	4-4K FBZ-SS	PB4550T-025
7029219004	GE16SM18X1.5EDCF	4-4K GBZ-SS	PB4550T-025
7029219015	GE16SM18X1.5EDOMD71	4-4K MHN-B	PB4550Y-026
7029219016	GE16SM18X1.5EDOMDCF	4-4K MHN-SS	PB4550Y-026
7029219018	GE16SM18X1.5X	4-4K RA-SS	PB45530-221
7029219019	GE16SM20EDOMDCF	4-4K T2HF-B	PB45530-221
7029219020	GE16SM26EDOMDCF	4-4K T2HF-SS	PB45549-000
7029219023	GE16SM26X1.5CFX	4-4K6OO4MXS	PB45549-000
7029219029	GE16SM27X2CFX	4-4K6PP4MXS	PB45549-000EX
7029219031	GE16SM27X2EDCF	4-4MHN-825	PB45549-000EX
7029219050	GE16SM27X2EDOMDCF	4-4R CBZ-SS	PB45549-006
7029219054	GE16SM71	4-4R FBZ-SS	PB45549-006
7029219063	GE16SM71X	4-4R MHN-B	PB45549-006EX
7029219071	GE16SMA71X	4-4R MHN-M	PB45549-006EX
7029219074	GE16SMACFX	4-4R MHN-SS	PB45549-010
7029219078	GE16SMCF	4-4R RA-6MO	PB45549-010
7029219081	GE16SMCFX	4-4R RA-B	PB45549-010EX
7029219088	GE16SMED71	4-4R RA-SS	PB45549-010EX
7029219089	GE16SMEDCF	4-4R T2HF-SS	PB45549-026
7029219092	GE16SMEDNBROMD71	4-4R T2HG-SS	PB45549-026
7029219126	GE16SMEDOMD71	4-4R6O4MXS	PB45549-030
7029219127	GE16SMEDOMDCF	4-4R6P4MLOS	PB45549-030
7029220003	GE16SMEDVITCF	4-4R6P4MXS	PB45549-030
7029230001	GE16SMEDVITOMDCF	4-4RHZ42EDMXSCF	PB45549-030
7029230002	GE16SMMS	4-4V3MXS	PB45549-058
7029520007	GE16SR1/2KEG71X	4-4V4OMLOS	PB45549-058
7029520011	GE16SR1/2KEGCF	4-4V4OMXS	PB45549-064
7029520027	GE16SR1/2KEGCFX	4-4V4OMXSS	PB45549-064
7029521007	GE16SR1/4CFX	4-5 F5OLO-S	PB45549-070

7029521008	GE16SR1/4EDOMD71	4-5 F5OX-S	PB45549-070
7029521012	GE16SR1/4EDOMDCF	45039595-00	PB45549-078
7029521014	GE16SR171X	45039595-06	PB45549-078
7029521015	GE16SR1EDCF	45039595-08	PB45549-100
7029521018	GE16SR1EDOMDCF	45039595-10	PB45549-100
7029521020	GE16SR1EDVITOMDCF	45039595-12	PB45549-110
7029521025	GE16SR3/471	45039595-14	PB45549-110
7029521033	GE16SR3/471X	45039595-15	PB45549-130
7029521058	GE16SR3/4ACF	45039595-18	PB45549-130
7029521065	GE16SR3/4CF	45039595-20	PB45549-132
7029521066	GE16SR3/4CFX	45039595-25	PB45549-132
7029521068	GE16SR3/4ED71	45039595-26	PB45549-140
7029521070	GE16SR3/4EDCF	45039595-30	PB45549-140
7029521072	GE16SR3/4EDOMD71	45039967-60	PB45549-150
7029521078	GE16SR3/4EDOMDCF	450CMTF	PB45549-150
7029521088	GE16SR3/4EDVITCF	450CMTF	PB45549-151
7029521091	GE16SR3/4EDVOMDCF	450CS	PB45549-151
7029521101	GE16SR3/4MS	450CS	PB45549-200
7029521105	GE16SR3/871	450CSA	PB45549-200
7029521112	GE16SR3/871X	450CSA	PB45549-252
7029521113	GE16SR3/8CF	450R	PB45549-252
7029522002	GE16SR3/8CFX	450R	PB45549-N000
7029522003	GE16SR3/8ED71	45104V4A	PB45549-N000
7029522004	GE16SR3/8EDCF	4510FIL	PB455NN-000
7029522009	GE16SR3/8EDOMD71	4510FIL	PB455NN-000
7029522015	GE16SR3/8EDOMDCF	451212MSN	PB4560G-053
7029522021	GE16SR3/8EDVITCF	451-4	PB4560G-053
7029522023	GE16SR3/8EDVOMDCF	451TC-10	PB45616-200
7029522024	GE16SR3/8KEGCFX	451TC-10-RL	PB45616-200
7029522025	GE16SR3/8MS	451TC-12	PB45649-000
7029522026	GE16SR71	451TC-12-RL	PB45649-000
7029522035	GE16SR71X	451TC-16	PB45649-000
7029522037	GE16SRA71X	451TC-16-RL	PB45649-000
7029522042	GE16SRACF	451TC-4	PB45649-001
7029522044	GE16SRACFX	451TC-4-RL	PB45649-001
7029522045	GE16SRCF	451TC-6	PB45649-002
7029522046	GE16SRCFX	451TC-6-RL	PB45649-002
7029522049	GE16SRED71	451TC-8	PB45649-004
7029522050	GE16SREDCF	451TC-8-RL	PB45649-004
7029522051	GE16SREDCFX	4520FIL	PB45649-004EX
7029522052	GE16SREDOMD71	4520FIL	PB45649-004EX
7029525001	GE16SREDOMDCF	4525FIL	PB45649-010
7029530008	GE16SREDVITCF	4525FIL	PB45649-010
7029530009	GE16SREDVITOMDCF	452BS1TF	PB45649-016
7029531001	GE16SRMS	452BS1TF	PB45649-016
7029531008	GE16SRMSX	4530FIL	PB45649-031
7029531021	GE16SRSTOSSCF	4530FIL	PB45649-031
7029531029	GE16SRX	4540FIL	PB45649-058
7029531032	GE16ZS1/2NPT71	4540FIL	PB45649-058
7029531033	GE16ZS3/4UNF71	454AS	PB45649-102
7029531036	GE16ZS3/4UNFCF	454AS	PB45649-102
7029531046	GE16ZS7/8UNFCF	454ATA	PB45649-N000
7029532002	GE16ZSM18EDCF	454ATA	PB45649-N000

7029532005	GE16ZSM18X1.5EDCF	454ATC	PB45649-N002
7029532007	GE16ZSMED71	454ATC	PB45649-N002
7029532009	GE16ZSMEDCF	454ATF	PB4570G-003
7029541002	GE16ZSR1/2KEGCF	454ATF	PB4570G-003
7029611003	GE16ZSR3/4ED71	454MTA	PB4570G-016
7029611014	GE16ZSR3/4EDCF	454MTA	PB4570G-016
7029611034	GE16ZSR3/4EDNBR71	454MTL	PB4570H-001
7029611035	GE16ZSR3/4EDVITCF	454MTL	PB4570H-001
7029612005	GE16ZSR3/8ED71	454TF	PB4570K-000
7029612015	GE16ZSR3/8EDCF	454TF	PB4570K-000
7029621002	GE16ZSR3/8EDNBR71	4554V4A	PB4570K-074
7041240400	GE16ZSR3/8EDVITCF	4556-25-00900-H100-000000	PB4570K-074
7041275400	GE16ZSRED71	4556-25-00900-H100-000000	PB4570K-200
7049110003	GE16ZSREDCF	4556-25-02050-H100-000000	PB4570K-200
7049110020	GE16ZSREDNBR71	4556-25-02050-H100-000000	PB4570K-206
7049110022	GE16ZSREDVITCF	4556-25-03915-H100-000000	PB4570K-206
7049111005	GE18L1/2NPT71	4556-25-03915-H100-000000	PB4570K-225
7049111012	GE18L1/2NPT71X	4557-32-00770-H100-000000	PB4570K-225
7049111013	GE18L1/2NPTCF	4557-32-00770-H100-000000	PB4570Y-026
7049111015	GE18L1/2NPTCFX	4557-32-01800-H100-000000	PB4570Y-026
7049111016	GE18L1/2NPTMS	4557-32-01800-H100-000000	PB45711-059
7049111020	GE18L11/16UNCF	4557-32-01850-H100-000000	PB45711-059
7049111024	GE18L11/16UNFOMDCF	4557-32-01850-H100-000000	PB45711-059
7049111026	GE18L11/16UNOMDCF	4557-32-01900-H100-000000	PB45711-059
7049111030	GE18L1NPT71	4557-32-01900-H100-000000	PB45711-062
7049111032	GE18L1NPT71X	4557-32-02100-H100-000000	PB45711-062
7049111033	GE18L1NPTCF	4557-32-02100-H100-000000	PB45712-000
7049111038	GE18L1NPTCFX	4557-32-02650-H100-000000	PB45712-000
7049111039	GE18L3/4NPT71	4557-32-02650-H100-000000	PB45716-200
7049111040	GE18L3/4NPT71X	4557-32-02800-H100-000000	PB45716-200
7049111042	GE18L3/4NPTCF	4557-32-02800-H100-000000	PB4571H-055
7049111045	GE18L3/4NPTCFX	455SA	PB4571H-055
7049111046	GE18L3/4UNF71	455SA	PB4571R-N065
7049111047	GE18L3/4UNFCF	455TF	PB4571R-N065
7049111050	GE18L3/4UNFOMD71	455TF	PB4571R-N065
7049111053	GE18L3/4UNFOMDCF	456V2A	PB4571R-N065
7049111054	GE18L3/8NPT71	456V4A	PB45722-015
7049111055	GE18L3/8NPT71X	457MTF	PB45722-015
7049111058	GE18L3/8NPTCF	457MTF	PB4572R-025
7049111059	GE18L3/8NPTCFX	457S	PB4572R-025
7049111061	GE18L7/8UNFCF	457S	PB45730-016
7049111062	GE18L7/8UNFCFX	457TF	PB45730-016
7049111063	GE18L7/8UNFOMD71	457TF	PB45730-073
7049111067	GE18L7/8UNFOMDCF	4-5F5OMXSS	PB45730-073
7049111070	GE18L7/8UNFVITCF	45KFAW13MPX	PB45730-096
7049111072	GE18LM16CFX	45KFAW17MPX	PB45730-096
7049111073	GE18LM16X1.5EDOMDCF	45KFAW17MVX	PB45730-217
7049111076	GE18LM18EDVITOMDCF	45KFAW21MPX	PB45730-217
7049111079	GE18LM18X1.571	45KFIW13MPX	PB45735-000
7049111080	GE18LM18X1.5CF	45KFIW17MPX	PB45735-000
7049111082	GE18LM18X1.5CFX	45KFIW17MVX	PB45735-000
7049111084	GE18LM18X1.5ED71	45M102QBPKG163	PB45735-000
7049111085	GE18LM18X1.5EDCF	45M102QBT1KG201	PB45748-209

7049111089	GE18LM18X1.5EDOMD71	45M105QBPKG161	PB45748-209
7049111096	GE18LM18X1.5EDOMDCF	45M105QBPKG163	PB45748-N209
7049111098	GE18LM20X1.5CFX	45M105QEBM3KG161	PB45748-N209
7049112003	GE18LM26EDVITOMDCF	45M110QBPKG161	PB45748-N233
7049112004	GE18LM26EDVOMDCF	45M110QEBM3KG201	PB45748-N233
7049112008	GE18LM26X1.5CF	45M110QEBPKG161	PB45749-000
7049112011	GE18LM26X1.5CFX	45M110QEBT1KG161	PB45749-000
7049112014	GE18LM26X1.5EDCF	45M110QHBPXG162	PB45749-001
7049112016	GE18LM26X1.5EDOMDCF	45M120QBPKG161	PB45749-001
7049112018	GE18LM27X2CF	45M120QEBPKG161	PB45749-002
7049112019	GE18LM27X2CFX	45M120QEBT1KG161	PB45749-002
7049112020	GE18LM71	45M120QVPXG162	PB45749-002
7049112021	GE18LM71X	45M2060WVPKG201	PB45749-002
7049112027	GE18LMACF	45M210QBM3KG241	PB45749-003
7049112029	GE18LMACFX	45M210QBPKG161	PB45749-003
7049112030	GE18LMCF	45M210QBPKG201	PB45749-003EX
7049112035	GE18LMCFX	45M210QBPKG201F1	PB45749-003EX
7049112040	GE18LMED71	45M210QBPKG241	PB45749-004
7049112041	GE18LMEDCF	45M210QBPKG243	PB45749-004
7049112042	GE18LMEDDPR71CF	45M210QBPKR241	PB45749-004
7049112043	GE18LMEDOMD71	45M210QEBM3KG201	PB45749-004
7049112044	GE18LMEDOMDCF	45M210QEBPKG201	PB45749-004EX
7049112047	GE18LMEDVITCF	45M210QHBF1NG242	PB45749-004EX
7049112053	GE18LMEDVITOMDCF	45M210QHBPXG162	PB45749-006
7049112055	GE18LMMS	45M220QBPHG161	PB45749-006
7049112059	GE18LMSTOSSMSX	45M220QBPKG161	PB45749-008
7049113911	GE18LR1/2KEG71	45M220QBPKG201	PB45749-008
7049113912	GE18LR1/2KEG71X	45M220QEBPKG201	PB45749-008
7049113913	GE18LR1/2KEGCF	45M220QEVPKG201	PB45749-008
7049113914	GE18LR1/2KEGCFX	45M302QBPKG163	PB45749-012
7049113915	GE18LR1/2KEGMS	45M310QBM3KG241	PB45749-012
7049121010	GE18LR1/4EDOMDCF	45M310QBPKG161S13	PB45749-013
7049121011	GE18LR171	45M310QBPKG241	PB45749-013
7049121015	GE18LR1CF	45M310QBPKG243	PB45749-015
7049121018	GE18LR1EDCF	45M310QBPXG162	PB45749-015
7049121021	GE18LR1EDOMD71	45M310QBPXG242	PB45749-016
7049121022	GE18LR1EDOMDCF	45M310QBT1NG242	PB45749-016
7049121025	GE18LR1EDVITOMDCF	45M310QEBPKG241	PB45749-018
7049121033	GE18LR3/471	45M310QEBPXG162	PB45749-018
7049121034	GE18LR3/471X	45M320QBPKG161	PB45749-023
7049121042	GE18LR3/4CF	45M320QBPKG201	PB45749-023
7049121047	GE18LR3/4CFX	45M320QBPKG241	PB45749-023EX
7049122004	GE18LR3/4ED71	45M320QEBPKG241	PB45749-023EX
7049122006	GE18LR3/4EDCF	45M4040WBPKG241	PB45749-026
7049122014	GE18LR3/4EDDPR71CF	45M405QBPXG242	PB45749-026
7049122019	GE18LR3/4EDOMD71	45RVP9072	PB45749-028
7049122026	GE18LR3/4EDOMDCF	45RVP9072-CE	PB45749-028
7049122029	GE18LR3/4EDOMDMS	45SFAW13SXN	PB45749-031
7049122040	GE18LR3/4EDVITCF	45SFAW17SXN	PB45749-031
7049122041	GE18LR3/4EDVITOMDCF	45SFIW13SXN	PB45749-031
7049122042	GE18LR3/4EDVOMDCF	45SFIW17SXN	PB45749-031
7049210001	GE18LR3/4KEGCF	4-6 BAR-HANDLE	PB45749-031EX
7049211004	GE18LR3/4KEGCFX	4-6 C5OLO-S	PB45749-031EX

7049211005	GE18LR3/4MS	4-6 C5OX-S	PB45749-036
7049211007	GE18LR3/871	4-6 CBZ-B	PB45749-036
7049211009	GE18LR3/871X	4-6 CBZ-SS	PB45749-041
7049219004	GE18LR3/8ACFX	4-6 CTX-S	PB45749-041
7049219010	GE18LR3/8CF	4-6 DBZ-SS	PB45749-043
7049219011	GE18LR3/8CFX	4-6 F5BU-S	PB45749-043
7049219015	GE18LR3/8ED71	4-6 F5OG5-S	PB45749-048
7049219016	GE18LR3/8EDCF	4-6 F5OLO-S	PB45749-048
7049219029	GE18LR3/8EDDPR71CF	4-6 FBU-S	PB45749-048EX
7049219036	GE18LR3/8EDOMD71	4-6 FBZ-SS	PB45749-048EX
7049219037	GE18LR3/8EDOMDCF	4-6 FH2BZ-SS	PB45749-053
7049219042	GE18LR3/8EDVITCF	4-6 FH4BZ-SS	PB45749-053
7049219050	GE18LR3/8EDVOMDCF	4-6 FLO-S	PB45749-053
7049219068	GE18LR3/8MS	4-6 FTX-S	PB45749-053
7049520008	GE18LR71	4-6 GBZ-B	PB45749-055
7049520013	GE18LR71X	4-6 GBZ-SS	PB45749-055
7049521004	GE18LRACF	4-6 LOHB3-S	PB45749-056
7049521007	GE18LRACFX	4-6 T2HF-SS	PB45749-056
7049521011	GE18LRAVOLCFX	4-6 T2HG-SS	PB45749-058
7049521012	GE18LRCF	4-6 TRBZ-SS	PB45749-058
7049521013	GE18LRCFX	4-6 V5OLO-S	PB45749-058
7049521019	GE18LRDPR71CF	4-6 XHBZ-SS	PB45749-058
7049521033	GE18LRDPR71MS	4-6 ZPC-SS	PB45749-064
7049521042	GE18LRED71	4602 06 13	PB45749-064
7049521048	GE18LREDCF	4602 07 17	PB45749-065
7049521055	GE18LREDDPR71CF	4602 10 21	PB45749-065
7049521061	GE18LREDMS	4602 13 27	PB45749-074
7049521064	GE18LREDNBROMD71	4602 18 34	PB45749-074
7049521067	GE18LREDOMD71	460R10	PB45749-087
7049521079	GE18LREDOMDCF	460R30	PB45749-087
7049521082	GE18LREDOMDMS	460R30MTC	PB45749-089
7049521085	GE18LREDVITCF	460RHH10MTC	PB45749-089
7049521087	GE18LREDVITOMDCF	461LT-10	PB45749-095EX
7049521088	GE18LRMS	461LT-12	PB45749-095EX
7049522002	GE18LRMSX	461LT-16	PB45749-098
7049522003	GE18LRSPH71	461LT-4	PB45749-098
7049522006	GE18LRSTOSSCF	461LT-5	PB45749-099
7049522009	GE18LRSTOSSCFX	461LT-6	PB45749-099
7049522011	GE18ZL1/2NPT71	461LT-8	PB45749-102
7049522014	GE18ZL1/2NPTCF	4620A	PB45749-102
7049522018	GE18ZL3/4NPTCF	4620A	PB45749-102
7049522026	GE18ZL3/4UNF71	462-10	PB45749-102
7049522027	GE18ZL3/4UNFCF	462-10-RL	PB45749-104EX
7049522030	GE18ZL3/8NPT71	462-12	PB45749-104EX
7049522031	GE18ZL3/8NPTCF	462-12-RL	PB45749-109
7049522034	GE18ZL7/8UNFCF	462-16	PB45749-109
7049522041	GE18ZLM18X1.5EDCF	462-16-RL	PB45749-123
7049530005	GE18ZLMED71	4621A	PB45749-123
7049531009	GE18ZLMEDCF	4621A	PB45749-129
7049531011	GE18ZLR3/4ED71	462-20-WR	PB45749-129
7049531012	GE18ZLR3/4EDCF	4622A	PB45749-201
7049531013	GE18ZLR3/4EDVCF	4622A	PB45749-201
7049531015	GE18ZLR3/8ED71	4623A	PB45749-201

7049531027	GE18ZLR3/8EDCF	4623A	PB45749-201
7049531028	GE18ZLR3/8EDVCF	462-4	PB45749-205EX
7049531037	GE18ZLR3/8EDVITCF	4624A	PB45749-205EX
7049531041	GE18ZLRED71	4624A	PB45749-300
7049531050	GE18ZLREDCF	462-4-RL	PB45749-300
7049531051	GE18ZLREDSSACF	462-5	PB45749-300
7049531055	GE18ZLREDVITCF	462-5-RL	PB45749-300
7049531062	GE18ZLREDVITSSACF	462-6	PB45749-301
7049532001	GE20S1/2NPT71	462-6-RL	PB45749-301
7049532002	GE20S1/2NPT71X	462-8	PB45749-304
7049532003	GE20S1/2NPTCF	462-8-RL	PB45749-304
7049532006	GE20S1/2NPTCFX	462ST-10	PB45749-N000
7049532025	GE20S11/16UN71	462ST-12	PB45749-N000
7049532031	GE20S11/16UNCF	462ST-16	PB45749-N001
7049532043	GE20S11/16UNOMD71	462ST-20	PB45749-N001
7049542001	GE20S11/16UNOMDCF	462ST-4	PB45749-N002
7059110001	GE20S11/16UNOMDVICF	462ST-5	PB45749-N002
7059111007	GE20S11/16UNVOMDCF	462ST-6	PB45749-N004
7059111009	GE20S15/16UNCF	462ST-8	PB45749-N004
7059111010	GE20S15/16UNOMDCF	462TC-10	PB45749-N023
7059111011	GE20S1NPT71	462TC-12	PB45749-N023
7059111012	GE20S1NPT71X	462TC-16	PB45749-N074
7059111014	GE20S1NPTCF	462TC-4	PB45749-N074
7059111015	GE20S1NPTCFX	462TC-5	PB457NN-001
7059522001	GE20S3/4NPT71	462TC-6	PB457NN-001
7059522002	GE20S3/4NPT71X	462TC-8	PB45803-038
7059531001	GE20S3/4NPTCF	4630A	PB45803-038
7059532001	GE20S3/4NPTCFX	4630A	PB4580G-003
7059532002	GE20S3/4NPTMS	4631A	PB4580G-003
7121100195	GE20S3/4UNFCF	4631A	PB4580G-053
7121100195	GE20S3/4UNFOMD71	463-5	PB4580G-053
7181711045	GE20S3/4UNFOMDCF	463-5-BLU	PB4580K-000
7186781146	GE20S7/8UNF71	463-5-BLU-RL	PB4580K-000
8050007011	GE20S7/8UNFCF	463-5-RL	PB4580K-200
8050007018	GE20S7/8UNFOMD71	463-6	PB4580K-200
8050007019	GE20S7/8UNFOMDCF	463-6-BLU	PB4580K-303
8050007025	GE20SM18X1.5EDCF	463-6-BLU-RL	PB4580K-303
8050007026	GE20SM18X1.5EDOMDCF	463-6-RL	PB4580T-001
8050007030	GE20SM22X1.5CF	463-8	PB4580T-001
8050007031	GE20SM22X1.5CFX	463-8-BLU	PB4580T-002
8050007043	GE20SM22X1.5EDCF	463-8-BLU-RL	PB4580T-002
8050007046	GE20SM22X1.5EDOMDCF	463-8-RL	PB4580Y-026
8050007078	GE20SM26X1.5ACFVOLX	4642FIL	PB4580Y-026
8050010011	GE20SM26X1.5ACFX	4642FIL	PB45812-000
8050010014	GE20SM33X2A71X	4-6-4R5OMLOS	PB45812-000
8050010017	GE20SM33X2EDOMDCF	465FIL	PB45816-200
8050010018	GE20SM71	465FIL	PB45816-200
8050010090	GE20SM71X	4661V2A	PB45830-072
8050010095	GE20SMCF	4-6C4OMLOS	PB45830-072
8051014175	GE20SMCFX	4-6C4OMXS	PB45849-000
8051014180	GE20SMED71	4-6C4OMXSS	PB45849-000
8051014181	GE20SMEDCF	4-6C5OMLOS	PB45849-001
8051014183	GE20SMEDOMD71	4-6C5OMLOSS	PB45849-001

8051014185	GE20SMEDOMDCF	4-6C5OMXSS	PB45849-002
8051014187	GE20SMEDVITOMDCF	4-6F3MK4S	PB45849-002
8051014188	GE20SMMS	4-6F3MK4SS	PB45849-004
8051014189	GE20SMSTOSS71	4-6F3T4S	PB45849-004
8051014190	GE20SR	4-6F42EDMLOS	PB45849-004
8051014198	GE20SR1/271	4-6F42EDMLOSCAP	PB45849-004
8051014199	GE20SR1/271X	4-6F42EDMLOSEPDM	PB45849-004EX
8051014200	GE20SR1/2A71X	4-6F42EDMLOSS	PB45849-004EX
8051014207	GE20SR1/2CF	4-6F42EDMXS	PB45849-006
8051014214	GE20SR1/2CFX	4-6F42EDMXSS	PB45849-006
8051014215	GE20SR1/2ED71	4-6F42MLS	PB45849-007
8051014225	GE20SR1/2EDCF	4-6F4OMXS	PB45849-007
8051014246	GE20SR1/2EDOMD71	4-6F4OMXSS	PB45849-016
8051014250	GE20SR1/2EDOMDCF	4-6F5OMLOS	PB45849-016
8051014253	GE20SR1/2EDVITCF	4-6F5OMLOSBP	PB45849-023
8051014257	GE20SR1/2EDVOMDCF	4-6F5OMLOSBPNB	PB45849-023
8051014258	GE20SR1/2KEGCFX	4-6F5OMLOSS	PB45849-026
8051014298	GE20SR1/2MS	4-6F5OMLOSV	PB45849-026
8051014312	GE20SR11/271	4-6F5OMXS	PB45849-031
8051014324	GE20SR11/2EDOMD71	4-6F5OMXSS	PB45849-031
8051014328	GE20SR11/471	4-6F6MK4S	PB45849-048
8051014340	GE20SR11/4CF	4-6F6MK4SS	PB45849-048
8051020095	GE20SR11/4CFX	4-6FMK4S	PB45849-058
8051020096	GE20SR11/4ED71	4-6FMK4SS	PB45849-058
8051020097	GE20SR11/4EDOMD71	4-6FMTXSS	PB45849-065
8051020101	GE20SR11/4EDOMDCF	4-6GMTXSS	PB45849-065
8051020118	GE20SR171	4-6K FBZ-SS	PB45849-068
8051020122	GE20SR171X	4-6K GBZ-SS	PB45849-068
8051020128	GE20SR1CF	4-6L LOHU86-S	PB45849-076
8051020169	GE20SR1CFX	4-6MMLOHB3S	PB45849-076
8051020197	GE20SR1ED71	4-6R FBZ-SS	PB45849-078
8052023080	GE20SR1EDCF	4-6S LOHU86-S	PB45849-078
8052023082	GE20SR1EDOMD71	4710-00650	PB45849-086
8052023098	GE20SR1EDOMDCF	4710-00650	PB45849-086
8052023110	GE20SR1EDVITOMDCF	4710-00665	PB45849-102
8052023113	GE20SR1KEGCFX	4710-00665	PB45849-102
8052023143	GE20SR1MS	4710-00850	PB45849-109
8052023147	GE20SR3/4KEGCF	4710-00850	PB45849-109
8052023156	GE20SR3/8EDOMDCF	4710V4A	PB45849-124
8052023158	GE20SR31B71	471TC-10	PB45849-124
8052023168	GE20SR71	471TC-12	PB45849-200
8052023173	GE20SR71X	471TC-16	PB45849-200
8052023186	GE20SRACFX	471TC-4	PB45849-204EX
8052023203	GE20SRCF	471TC-5	PB45849-204EX
8052030110	GE20SRCFX	471TC-6	PB45849-301
8052030113	GE20SRED71	471TC-8	PB45849-301
8052030123	GE20SREDCF	472TC-20	PB45849-N000
8052030166	GE20SREDOMD71	472TC-24	PB45849-N000
8052030171	GE20SREDOMDCF	472TC-32	PB45849-N002
8052030177	GE20SREDOMDCFBP	4731FIL	PB45849-N002
8052030188	GE20SREDVITCF	4731FIL	PB45849-N074
8052030208	GE20SREDVITOMDCF	4751FIL	PB45849-N074
8052030217	GE20SRMS	4751FIL	PB458NN-000

8052035128	GE20SRMSX	4755E	PB458NN-000
8052035136	GE20SRSA310OMDCF	4768X	PB458NN-001
8052035152	GE20SRSTOSSCF	477-10	PB458NN-001
8052035163	GE20ZS11/16UNCF	477-12	PB46049-000
8052035177	GE20ZS3/4UNFCF	477-16	PB46049-000
8052035203	GE20ZS7/8UNFCF	477-4	PB46049-000
8060035003	GE20ZS7/8UNFVITCF	477-5	PB46049-000
8060035004	GE20ZSMED71	477-6	PB46104-000
8060035010	GE20ZSMEDCF	477-8	PB46104-000
8060035036	GE20ZSR1/2CF	477ST-10	PB4610E-000
8060035046	GE20ZSR1/2ED71	477ST-12	PB4610E-000
8060035047	GE20ZSR1/2EDCF	477ST-16	PB4610G-004
8060035048	GE20ZSR1/2EDNBR71	477ST-4	PB4610G-004
8060035052	GE20ZSR1/2EDVITCF	477ST-5	PB4610H-000
8060035061	GE20ZSR1ED71	477ST-6	PB4610H-000
8060050026	GE20ZSR1EDCF	477ST-8	PB4610K-000
8060050027	GE20ZSR1EDVITCF	4-8 C5OX-S	PB4610K-000
8060050028	GE20ZSRED71	4-8 CBZ-B	PB4610Z-000
8060050029	GE20ZSREDCF	4-8 CBZ-SS	PB4610Z-000
8060050031	GE20ZSREDNBR71	4-8 CTX-S	PB46147-000
8060050032	GE20ZSREDVITCF	4-8 DBZ-SS	PB46147-000
8060050033	GE22L1/2NPT71	4-8 F5OLO-S	PB46148-000
8060050034	GE22L1/2NPT71X	4-8 F5OX-S	PB46148-000
8060070002	GE22L1/2NPTCF	4-8 FBU-S	PB46149-000
8060070007	GE22L1/2NPTCFX	4-8 FBZ-B	PB46149-000
8060200011	GE22L11/16UNCF	4-8 FBZ-SS	PB46149-003
8060200013	GE22L11/16UNFCF	4-8 FH2BZ-SS	PB46149-003
8060300001	GE22L11/16UNOMD71	4-8 FH4BZ-SS	PB46149-004
8060300002	GE22L11/16UNOMDCF	4-8 FTX-S	PB46149-004
8061000000	GE22L11/16UNVOMDCF	4-8 GBZ-B	PB46149-004
8061000004	GE22L15/16UN71	4-8 GBZ-SS	PB46149-004
8061000005	GE22L15/16UNCF	4-8 T2HF-SS	PB46149-004EX
8061000009	GE22L15/16UNOMDCF	4-8 T2HG-SS	PB46149-004EX
8061000010	GE22L1NPT71	4-8 TRBZ-SS	PB46149-007
8061000011	GE22L1NPT71X	4-8 ZHBA-SS	PB46149-007
8069000013	GE22L1NPTCF	4-8 ZHLS-SS	PB46149-024
8069000015	GE22L1NPTCFX	4-8 ZPC-SS	PB46149-024
8069000016	GE22L3/4NPT71	480-8M-30	PB46149-300
8069000018	GE22L3/4NPT71X	4810 08 13	PB46149-300
8069000020	GE22L3/4NPTCF	4810 10 17	PB46149-301
8069000034	GE22L3/4NPTCFX	4810 15 21	PB46149-301
8069000045	GE22L3/4NPTMS	4810 20 27	PB46149-N000
8069000046	GE22L3/4UNFCF	4810 25 34	PB46149-N000
8069000070	GE22L3/8NPT71	4810000A	PB461NN-000
8204045001	GE22L3/8NPTCFX	4810000A	PB461NN-000
8204045001	GE22L7/8UNF71	4810003D	PB46203-030
8204046062	GE22L7/8UNFCF	4810003D	PB46203-030
8204046062	GE22L7/8UNFOMD71	4810003N	PB4620K-000
8204130007	GE22L7/8UNFOMDCF	4810003N	PB4620K-000
8204130007	GE22L7/8UNFVOMDCF	4810004K	PB4620Y-000
8204130360	GE22LM18X1.5CFX	4810004K	PB4620Y-000
8204130360	GE22LM18X1.5EDOMDCF	4810005P	PB4622R-000
8204131047	GE22LM18X1.5X	4810005P	PB4622R-000

8204131047	GE22LM22EDVOMDCF	4810006J	PB46249-000
8204131054	GE22LM22EDVOMDVOLCF	4810006J	PB46249-000
8204131054	GE22LM22X1.571	481000A2	PB46249-003EX
8204131125	GE22LM22X1.571X	481000A2	PB46249-003EX
8204131125	GE22LM22X1.5CF	481000A4	PB46249-004
8204131191	GE22LM22X1.5CFX	481000A4	PB46249-004
8204131191	GE22LM22X1.5ED71	481000B2	PB46249-004EX
8204131612	GE22LM22X1.5EDCF	481000B2	PB46249-004EX
8204131612	GE22LM22X1.5EDOMD71	481000C1	PB46249-007
8204132135	GE22LM22X1.5EDOMDCF	481000C1	PB46249-007
8204132135	GE22LM27X2CF	481000C2	PB46249-N003
8204132138	GE22LM27X2CFX	481000C2	PB46249-N003
8204132138	GE22LM27X2EDCF	481000C4	PB462NN-000
8204132267	GE22LM27X2EDOMDCF	481000C4	PB462NN-000
8204132267	GE22LM30X1.5CFX	481000C5	PB46449-300
8204132286	GE22LM33X2CFX	481000C5	PB46449-300
8204132286	GE22LM33X2EDOMDCF	481000C7	PB46449-500
8204132290	GE22LM71	481000C7	PB46449-500
8204132290	GE22LM71X	481000S7	PB46449-N300
8204132307	GE22LMACF	481000S7	PB46449-N300
8204132307	GE22LMACFVOLX	481-00100	PB4670K-101
8204132451	GE22LMCF	481-00100	PB4670K-101
8204132451	GE22LMCFX	481-00110	PB4670T-103
8204139882	GE22LMED71	481-00110	PB4670T-103
8204139882	GE22LMEDCF	481-00111	PB46748-101
8204139929	GE22LMEDOMD71	481-00111	PB46748-101
8204139929	GE22LMEDOMDCF	481-00120	PB46749-101
8204139932	GE22LMEDVITCF	481-00120	PB46749-101
8204139932	GE22LMEDVITOMDCF	481-00125	PB46749-101EX
8204139944	GE22LMEDVITOMDVOLCF	481-00125	PB46749-101EX
8204139944	GE22LMMS	481-00150	PB46749-104
8204139945	GE22LMMSX	481-00150	PB46749-104
8204139945	GE22LMSTOSS71	481-00165	PB46749-N101
8204139951	GE22LR1/271	481-00165	PB46749-N101
8204139951	GE22LR1/271X	481-00180	PB4680G-101
8204139962	GE22LR1/2CF	481-00180	PB4680G-101
8204139962	GE22LR1/2CFX	481-00190	PB46847-101
8204139997	GE22LR1/2ED71	481-00190	PB46847-101
8204139997	GE22LR1/2ED83OMDCF	481-00200	PB46849-101
8204160049	GE22LR1/2EDCF	481-00200	PB46849-101
8204160049	GE22LR1/2EDDPR71CF	481-00240	PB46849-101EX
8204160112	GE22LR1/2EDOMD71	481-00240	PB46849-101EX
8204160112	GE22LR1/2EDOMDCF	481-00250	PB46849-N101
8204750007	GE22LR1/2EDOMDMS	481-00250	PB46849-N101
8204750007	GE22LR1/2EDVITCF	481-00265	PB47049-100
8204750056	GE22LR1/2EDVOMDCF	481-00265	PB47049-100
8204750056	GE22LR1/2KEG71X	481-00270	PB4710G-100
8204950147	GE22LR1/2KEGCF	481-00270	PB4710G-100
8204950147	GE22LR1/2MS	481-00300	PB4710G-200
8204950201	GE22LR1/2MSX	481-00300	PB4710G-200
8204950201	GE22LR11/4EDOMDCF	481-00315	PB4710K-100
8204950266	GE22LR171	481-00315	PB4710K-100
8204950266	GE22LR171X	481-00320	PB4710K-200

8231112712	GE22LR1CF	481-00320	PB4710K-200
8231112838	GE22LR1CFX	481-00340	PB4710K-212
8231120462	GE22LR1ED71	481-00340	PB4710K-212
8231600100	GE22LR1EDCF	481-00350	PB47149-021
8231600456	GE22LR1EDDPR71CF	481-00350	PB47149-021
8234000621	GE22LR1EDMS	481-00400	PB47149-100
8234000628	GE22LR1EDOMD71	481-00400	PB47149-100
8234700201	GE22LR1EDOMDCF	481-00430	PB47149-200
8234800105	GE22LR1EDOMDMS	481-00430	PB47149-200
8234890270	GE22LR1EDVITCF	481-00440	PB47149-201
8234890271	GE22LR1EDVITOMDCF	481-00440	PB47149-201
8234890575	GE22LR1KEGMS	481-00450	PB47149-201
8234890625	GE22LR1MS	481-00450	PB47149-201
8234890633	GE22LR1MSX	481-00500	PB47149-204
8234890634	GE22LR3/4KEG71	481-00500	PB47149-204
8234890708	GE22LR3/4KEG71X	481-00550	PB47149-205
8234891029	GE22LR3/4KEGCF	481-00550	PB47149-205
8234930268	GE22LR3/4KEGCFX	481-00560	PB47149-210
8234930280	GE22LR3/4KEGMS	481-00560	PB47149-210
8234931519	GE22LR3/4KEGMSX	481-00570	PB47149-215
8234939001	GE22LR3/8EDCF	481-00570	PB47149-215
8234939021	GE22LR71	481-00600	PB47149-N100
8234939022	GE22LR71X	481-00600	PB47149-N100
8234939023	GE22LRACF	481-00620	PB47149-N200
8234939027	GE22LRACFX	481-00620	PB47149-N200
8234939028	GE22LRAMSX	481-00625	PB47149-N201
8234939031	GE22LRCF	481-00625	PB47149-N201
8234939032	GE22LRCFX	481-00650	PB47149-N253
8234939091	GE22LRDPR71CF	481-00650	PB47149-N253
9000003001	GE22LRDPR71MS	481-00670	PB4720K-100
9000003003	GE22LRED71	481-00670	PB4720K-100
9000003004	GE22LREDCF	481-00700	PB4720K-212
9000006000	GE22LREDDPR71CF	481-00700	PB4720K-212
9000006001	GE22LREDMS	481-00735	PB4720T-207
9000006002	GE22LREDNBROMD71	481-00735	PB4720T-207
9000010000	GE22LREDOMD71	481-00750	PB47249-100
9000010001	GE22LREDOMDCF	481-00750	PB47249-100
9000010003	GE22LREDOMDMS	481-00765	PB47249-200
9000010004	GE22LREDVITCF	481-00765	PB47249-200
9000010008	GE22LREDVITOMDCF	481-00790	PB47249-200
9000010014	GE22LRMS	481-00790	PB47249-200
9000020000	GE22LRMSX	481-00800	PB47249-201
9000020003	GE22LRSTOSSCF	481-00800	PB47249-201
9000020004	GE22ZL1/2NPTCF	481-00850	PB47249-204
9000040000	GE22ZL11/16UNCF	481-00850	PB47249-204
9000040001	GE22ZL11/16UNVITCF	481-00900	PB47249-210
9000040002	GE22ZL15/16UNCF	481-00900	PB47249-210
9000060000	GE22ZL3/4NPT71	481-00920	PB47249-253
9000060003	GE22ZL3/4NPTCF	481-00920	PB47249-253
9000120000	GE22ZL7/8UNFCF	481-00934	PB47249-N100
9000120001	GE22ZLM22X1.5ED71	481-00934	PB47249-N100
9000500001	GE22ZLM22X1.5EDCF	481-00950	PB47249-N201
9019010000	GE22ZLMED71	481-00950	PB47249-N201

9019010002	GE22ZLMEDCF	481-00960	PB47730-001
9019015001	GE22ZLMEDVITSSACF	481-00960	PB47730-001
9090050700	GE22ZLR1/2ED71	481-01000	PB48049-000
9090050700	GE22ZLR1/2EDCF	481-01000	PB48049-000
9090050900	GE22ZLR1/2EDSSACF	481-01020	PB48049-002
9090050900	GE22ZLR1/2EDVCF	481-01020	PB48049-002
9090051000	GE22ZLR1ED71	481-01050	PB48049-003
9090051000	GE22ZLR1EDCF	481-01050	PB48049-003
9090051100	GE22ZLR1EDVCF	481-01100	PB480NN-000
9090051100	GE22ZLR3/4KEGCF	481-01100	PB480NN-000
9090051500	GE22ZLRCF	481-01150	PB48147-000
9090051500	GE22ZLRED71	481-01150	PB48147-000
9120029030	GE22ZLREDCF	481-01170	PB48148-009
9120029104	GE22ZLREDSSACF	481-01170	PB48148-009
9120029105	GE22ZLREDVITCF	481-01180	PB48148-021
9120029106	GE25S11/16UN71	481-01180	PB48148-021
9120029107	GE25S11/16UNCF	481-01200	PB48149-000
9120029108	GE25S11/16UNOMD71	481-01200	PB48149-000
9120029109	GE25S11/16UNOMDCF	481-01220	PB48149-000
9120029110	GE25S11/16UNOMDVICF	481-01220	PB48149-000
9120029111	GE25S11/2NPT71	481-01240	PB48149-001
9120029112	GE25S11/2NPT71X	481-01240	PB48149-001
9120029113	GE25S11/2NPTCFX	481-01260	PB48149-002
9120029114	GE25S11/4NPT71	481-01260	PB48149-002
9120029115	GE25S11/4NPT71X	481-01306	PB48149-003
9120029116	GE25S11/4NPTCFX	481-01306	PB48149-003
9120029117	GE25S15/16UN71	481-01350	PB48149-004
9120029118	GE25S15/16UNCF	481-01350	PB48149-004
9120029119	GE25S15/16UNFCF	481-01400	PB48149-006
9120029120	GE25S15/16UNOMD71	481-01400	PB48149-006
9120029121	GE25S15/16UNOMDCF	481-01420	PB48149-N000
9120029122	GE25S15/16UNOMDVICF	481-01420	PB48149-N000
9120029123	GE25S1NPT71	481-01450	PB48149-N035
9120029124	GE25S1NPT71X	481-01450	PB48149-N035
9120029130	GE25S1NPTCF	481-01490	PB48237-020
9120029151	GE25S1NPTCFX	481-01490	PB48237-020
9120029153	GE25S1NPTDPR71CF	481-01500	PB48249-000
9120029154	GE25S3/4NPT71	481-01500	PB48249-000
9120029155	GE25S3/4NPT71X	481-01550	PB48249-000
9120029156	GE25S3/4NPTCF	481-01550	PB48249-000
9120029157	GE25S3/4NPTCFX	481-01600	PB48249-001
9120029158	GE25SM22EDOMDCF	481-01600	PB48249-001
9120029159	GE25SM22X1.5EDOMD71	481-01620	PB48249-002
9120029160	GE25SM26X1.5EDOMDCF	481-01620	PB48249-002
9120029161	GE25SM27X2EDOMDCF	481-01646	PB48349-000
9120029162	GE25SM71	481-01646	PB48349-000
9120029163	GE25SM71X	481-01650	PB48349-000
9120029164	GE25SMA71X	481-01650	PB48349-000
9120029165	GE25SMCF	481-01680	PB48349-001
9120029166	GE25SMCFX	481-01680	PB48349-001
9120029168	GE25SMED71	481-01700	PB48349-002
9120029171	GE25SMEDCF	481-01700	PB48349-002
9120029176	GE25SMEDOMD71	481-01745	PB48349-003

9120029203	GE25SMEDOMDCF	481-01745	PB48349-003
9120029206	GE25SMEDSTOSSORCF	481-01800	PB48349-004
9120029207	GE25SMEDVITOMDCF	481-01800	PB48349-004
9120029214	GE25SR1/2CF	481-01820	PB48349-N000
9120029215	GE25SR1/2ED71	481-01820	PB48349-N000
9120029250	GE25SR1/2EDCF	481-01900	PB48349-N002
9120029251	GE25SR1/2EDOMD71	481-01900	PB48349-N002
9120029252	GE25SR1/2EDOMDCF	481-01910	PB48400-061
9120029253	GE25SR1/2EDVITCF	481-01910	PB48400-061
9120029254	GE25SR1/2EDVOMDCF	481-02000	PB4840H-025
9120029255	GE25SR11/2CFX	481-02000	PB4840H-025
9120029259	GE25SR11/2DPR71CF	481-02050	PB4840K-005
9120029260	GE25SR11/2ED71	481-02050	PB4840K-005
9120029261	GE25SR11/2EDCF	481-02250	PB4840Y-000
9120029262	GE25SR11/2EDOMD71	481-02250	PB4840Y-000
9120029263	GE25SR11/2EDOMDCF	481-02650	PB48416-005
9120029264	GE25SR11/2EDVITCF	481-02650	PB48416-005
9120029265	GE25SR11/471X	481-02850	PB4841V-063EX
9120029266	GE25SR11/4CF	481-02850	PB4841V-063EX
9120029267	GE25SR11/4CFX	4810440P	PB4842R-000
9120029269	GE25SR11/4ED71	4810440P	PB4842R-000
9120029301	GE25SR11/4EDCF	481-04475	PB48430-004EX
9120029302	GE25SR11/4EDOMD71	481-04475	PB48430-004EX
9120029303	GE25SR11/4EDOMDCF	481044A5	PB48430-024
9120029304	GE25SR11/4EDVOMDCF	481044A5	PB48430-024
9120029305	GE25SR1KEG71	481044A7	PB48430-024
9120029306	GE25SR1KEGCFX	481044A7	PB48430-024
9120029307	GE25SR3/471	481044A9	PB48430-048
9120029308	GE25SR3/471X	481044A9	PB48430-048
9120029309	GE25SR3/4ACFVOLX	481044F4	PB48435-000
9120029310	GE25SR3/4CF	481044F4	PB48435-000
9120029311	GE25SR3/4CFX	481044S2	PB48448-009
9120029312	GE25SR3/4ED71	481044S2	PB48448-009
9120029313	GE25SR3/4EDCF	4810450A	PB48449-000
9120029314	GE25SR3/4EDOMD71	4810450A	PB48449-000
9120029315	GE25SR3/4EDOMDCF	4810453D	PB48449-000
9120029316	GE25SR3/4EDVIOMDCF	4810453D	PB48449-000
9120029317	GE25SR3/4EDVITCF	481045C2	PB48449-001
9120029318	GE25SR3/4EDVOMDCF	481045C2	PB48449-001
9120029319	GE25SR3/4KEGCFX	481-04800	PB48449-002
9120029320	GE25SR3/4MS	481-04800	PB48449-002
9120029321	GE25SR3/8EDOMDCF	4811803D	PB48449-002
9120029904	GE25SR71	4811803D	PB48449-002
9120029906	GE25SR71X	481180C2	PB48449-003
9120029907	GE25SRACF	481180C2	PB48449-003
9120029908	GE25SRACFX	4811FIL	PB48449-003
9120029909	GE25SRCF	4811FIL	PB48449-003
9120029910	GE25SRCFX	4812 10 13	PB48449-003EX
9120029911	GE25SRDPR71MS	4812 10 17	PB48449-003EX
9120029912	GE25SRED71	4812 15 21	PB48449-004
9120029913	GE25SREDCF	4812 20 27	PB48449-004
9120029914	GE25SREDI14OMDCF	4812 25 34	PB48449-004
9120029915	GE25SREDMS	4812 32 42	PB48449-004

9120029916	GE25SREDOMD71	4812 40 49	PB48449-004EX
9120029917	GE25SREDOMDCF	4812 50 48	PB48449-004EX
9120029918	GE25SREDSTOSSORCF	4812FIL	PB48449-005
9120029919	GE25SREDVITCF	4812FIL	PB48449-005
9120029923	GE25SREDVITOMDCF	4813 15 22	PB48449-005
9120029926	GE25SRMS	4813FIL	PB48449-005
9120029959	GE25SRSTOSSCF	4813FIL	PB48449-010
9120029966	GE25ZS11/16UNCF	4813FIL	PB48449-010
9120030006	GE25ZS11/16UNVITCF	4813FIL	PB48449-010
9120030008	GE25ZS15/16UNCF	4815FIL	PB48449-010
9120030012	GE25ZS15/16UNFCF	4815FIL	PB48449-011
9120030013	GE25ZS1NPTCF	4816FIL	PB48449-011
9120030014	GE25ZS3/4NPT71	4816FIL	PB48449-012
9120030015	GE25ZSMED71	4818651T	PB48449-012
9120030016	GE25ZSMEDCF	4818651T	PB48449-016
9120030017	GE25ZSR1/2ED71	4818653D	PB48449-016
9120030023	GE25ZSR1/2EDCF	4818653D	PB48449-026
9120030057	GE25ZSR1/2EDVITCF	481865A2	PB48449-026
9120030062	GE25ZSR11/4ED71	481865A2	PB48449-036
9120030065	GE25ZSR11/4EDCF	481865A4	PB48449-036
9120030415	GE25ZSR11/4EDVITCF	481865A4	PB48449-040
9120030419	GE25ZSR3/4ED71	481865A5	PB48449-040
9120030420	GE25ZSR3/4EDCF	481865A5	PB48449-055
9120030422	GE25ZSR3/4EDVITCF	481865A9	PB48449-055
9120030434	GE25ZSRED71	481865A9	PB48449-063EX
9120039012	GE25ZSREDCF	481865B2	PB48449-063EX
9120039014	GE25ZSREDVITCF	481865B2	PB48449-N000
9120039027	GE28L1/2NPTCFX	481865C1	PB48449-N000
9120039054	GE28L11/16UNCF	481865C1	PB48449-N001
9120039056	GE28L11/16UNOMD71	481865C2	PB48449-N001
9120039059	GE28L11/16UNOMDCF	481865C2	PB48449-N004
9120039063	GE28L11/4NPT71	481865C5	PB48449-N004
9120039065	GE28L11/4NPT71X	481865C5	PB48449-N045
9120039067	GE28L11/4NPTCF	481865J3	PB48449-N045
9120039072	GE28L11/4NPTCFX	481865J3	PB484NN-000
9120039098	GE28L15/16UNCF	481865K8	PB484NN-000
9120059052	GE28L15/16UNOMD71	481865K8	PB4850K-005
9120059053	GE28L15/16UNOMDCF	482-00100	PB4850K-005
9120059054	GE28L15/16UNVOMDCF	482-00100	PB4850Y-000
9120059055	GE28L1NPT71	482-00125	PB4850Y-000
9120059056	GE28L1NPT71X	482-00125	PB48516-000
9120059110	GE28L1NPTCF	482-00150	PB48516-000
9120059115	GE28L1NPTCFX	482-00150	PB48530-035
9120059182	GE28L1NPTMS	482-00180	PB48530-035
9120069086	GE28L3/4NPT71	482-00180	PB48530-049
9120069087	GE28L3/4NPT71X	482-00200	PB48530-049
9120079115	GE28L3/4NPTCF	482-00200	PB48547-000
9120079134	GE28L3/4NPTCFX	482-00250	PB48547-000
9120079135	GE28L7/8UNFCF	482-00250	PB48549-000
9120079266	GE28L7/8UNFOMDCF	482-00300	PB48549-000
9120079275	GE28LM22EDOMDCF	482-00300	PB48549-001
9120079296	GE28LM22X1.5EDOMD71	482-00320	PB48549-001
9120079297	GE28LM26EDOMDCF	482-00320	PB48549-002

9120088009	GE28LM26X1.5CF	482-00330	PB48549-002
9120088010	GE28LM26X1.5CFX	482-00330	PB48549-003
9120089002	GE28LM27EDOMDCF	482-00350	PB48549-003
9120089003	GE28LM27X2CFX	482-00350	PB48549-004
9120089040	GE28LM30EDVITOMDCF	482-00375	PB48549-004
9120089041	GE28LM30X1.5EDOMDCF	482-00375	PB48549-004EX
9120089042	GE28LM42X2EDOMDCF	482-00380	PB48549-004EX
9120089050	GE28LM71	482-00380	PB48549-010
9120089051	GE28LM71X	482-00400	PB48549-010
9120089060	GE28LMACFX	482-00400	PB48549-012
9120089061	GE28LMCF	482-00410	PB48549-012
9120089062	GE28LMCFX	482-00410	PB48549-026
9120089070	GE28LMED71	482-00450	PB48549-026
9120089201	GE28LMEDCF	482-00450	PB48549-036
9120089202	GE28LMEDDPR71CF	482-00460	PB48549-036
9120089208	GE28LMEDOMD71	482-00460	PB48549-041
9120089212	GE28LMEDOMDCF	482-00480	PB48549-041
9120089217	GE28LMEDVITCF	482-00480	PB48549-043
9120089224	GE28LMEDVITOMDCF	482-00485	PB48549-043
9120089234	GE28LR	482-00485	PB48549-N000
9120089238	GE28LR1/271	482-00500	PB48549-N000
9120089243	GE28LR1/271X	482-00500	PB48549-N001
9120089250	GE28LR1/2CF	482-00530	PB48549-N001
9120089257	GE28LR1/2CFX	482-00530	PB485NN-001
9120089258	GE28LR1/2ED71	482-00540	PB485NN-001
9120089259	GE28LR1/2EDCF	482-00540	PB48612-003
9120089260	GE28LR1/2EDOMD71	482-00550	PB48612-003
9120089263	GE28LR1/2EDOMDCF	482-00550	PB48711-067
9120089264	GE28LR11/2EDCF	482-00570	PB48711-067
9120089268	GE28LR11/2EDOMDCF	482-00570	PB48729-077
9120089282	GE28LR11/471	482-00600	PB48729-077
9120089284	GE28LR11/471X	482-00600	PB48730-010
9120089286	GE28LR11/4CF	482-00610	PB48730-010
9120089290	GE28LR11/4CFX	482-00610	PB48730-012
9120089291	GE28LR11/4DPR71CF	482-00650	PB48730-012
9120089293	GE28LR11/4ED71	482-00650	PB48730-044
9120089296	GE28LR11/4EDCF	482-00670	PB48730-044
9120089297	GE28LR11/4EDOMD71	482-00670	PB48730-047
9120089301	GE28LR11/4EDOMDCF	482-00700	PB48730-047
9120089302	GE28LR11/4EDVITCF	482-00700	PB48730-066
9120089303	GE28LR11/4EDVOMDCF	482-00710	PB48730-066
9120089305	GE28LR11/4KEGCFX	482-00710	PB48730-119
9120089307	GE28LR1KEG71	482-00750	PB48730-119
9120089308	GE28LR1KEG71X	482-00750	PB48730-120
9120089309	GE28LR1KEGCF	482-00769	PB48730-120
9120089310	GE28LR1KEGCFX	482-00769	PB48730-131
9120089328	GE28LR3/471	482-00800	PB48730-131
9120089332	GE28LR3/471X	482-00800	PB48749-072
9120089343	GE28LR3/4CF	482-00840	PB48749-072
9120089352	GE28LR3/4CFX	482-00840	PB48749-081
9120089354	GE28LR3/4DPR71CF	482-00850	PB48749-081
9120089358	GE28LR3/4ED71	482-00850	PB48749-087
9120089361	GE28LR3/4EDCF	482-00880	PB48749-087

9120089362	GE28LR3/4EDMS	482-00880	PB48749-101
9120089363	GE28LR3/4EDOMD71	482-00900	PB48749-101
9120089366	GE28LR3/4EDOMDCF	482-00900	PB48749-105
9120089371	GE28LR3/4EDVITCF	482-01000	PB48749-105
9120089372	GE28LR3/4EDVOMDCF	482-01000	PB48749-113
9120089373	GE28LR3/4MS	482-01050	PB48749-113
9120089377	GE28LR3/8EDOMDCF	482-01050	PB48749-116
9120089387	GE28LR71	482-01055	PB48749-116
9120089391	GE28LR71X	482-01055	PB48749-117
9120089392	GE28LRACF	482-01100	PB48749-117
9120089393	GE28LRACFX	482-01100	PB48749-122
9120089394	GE28LRAMS	482-01150	PB48749-122
9120089395	GE28LRAMSX	482-01150	PB48749-126
9120089506	GE28LRCF	482-01200	PB48749-126
9120089507	GE28LRCFX	482-01200	PB48749-128
9120089512	GE28LRDPR71CF	482-01290	PB48749-128
9120089514	GE28LRDPR71MS	482-01290	PB48749-129
9120089541	GE28LRED71	482-01300	PB48749-129
9120089552	GE28LREDCF	482-01300	PB48749-130
9120089553	GE28LREDDPR71CF	482-01350	PB48749-130
9120089554	GE28LREDMS	482-01350	PB48749-132
9120089585	GE28LREDNBROMD71	482-01400	PB48749-132
9120089586	GE28LREDOMD71	482-01400	PB48749-134
9120089587	GE28LREDOMD71BP	482-01500	PB48749-134
9120089591	GE28LREDOMDCF	482-01500	PB48749-136
9120089592	GE28LREDOMDMS	482-01550	PB48749-136
9120089593	GE28LREDVITCF	482-01550	PB48749-137
9120089594	GE28LREDVITOMDCF	482-01600	PB48749-137
9120089595	GE28LRMS	482-01600	PB48749-139
9120089597	GE28LRMSX	482-01650	PB48749-139
9120089598	GE28LRSTOSSCF	482-01650	PB48830-093
9120089612	GE28ZL11/16UNCF	482-01800	PB48830-093
9120089614	GE28ZL15/16UNCF	482-01800	PB48830-095
9120089615	GE28ZL1NPTCF	482-01810	PB48830-095
9120089617	GE28ZLMED71	482-01810	PB48849-015
9120089618	GE28ZLMEDCF	482-01820	PB48849-015
9120089619	GE28ZLR1/2ED71	482-01820	PB48849-040
9120089667	GE28ZLR1/2EDCF	482-01850	PB48849-040
9120089684	GE28ZLR11/4ED71	482-01850	PB48849-050
9120089692	GE28ZLR11/4EDCF	482-02000	PB48849-050
9120089693	GE28ZLR11/4EDVITCF	482-02000	PB48849-051
9120089722	GE28ZLR3/4ED71	482-02050	PB48849-051
9120089723	GE28ZLR3/4EDCF	482-02050	PB48849-055
9120089725	GE28ZLR3/4EDSSACF	482-02054	PB48849-055
9120091001	GE28ZLR3/4EDVCF	482-02054	PB48849-058
9120091002	GE28ZLR3/4EDVITCF	482-02160	PB48849-058
9120091003	GE28ZLRCF	482-02160	PB48849-094
9120091005	GE28ZLRED71	482-02200	PB48849-094
9120091007	GE28ZLREDCF	482-02200	PB48849-099
9120091008	GE28ZLREDVITCF	482-02250	PB48849-099
9120091009	GE28ZLREDVITSSACF	482-02250	PB48849-121
9120091012	GE30S11/2NPT71	482-02300	PB48849-121
9120091013	GE30S11/2NPT71X	482-02300	PB48849-123

9120091015	GE30S11/2NPTCF	482-02330	PB48849-123
9120091016	GE30S11/4NPT71	482-02330	PB48849-124
9120091017	GE30S11/4NPT71X	482-02420	PB48849-124
9120091018	GE30S11/4NPTCF	482-02420	PB48849-133
9120091019	GE30S11/4NPTCFX	482-02600	PB48849-133
9120091021	GE30S15/16UN71	482-02600	PB49049-000
9120091022	GE30S15/16UNCF	482-02650	PB49049-000
9120091023	GE30S15/16UNFOMDCF	482-02650	PB49049-003
9120091024	GE30S15/16UNOMD71	482-02900	PB49049-003
9120091025	GE30S15/16UNOMDCF	482-02900	PB49139-000
9120091026	GE30S15/16UNVOMDCF	482-03050	PB49139-000
9120091027	GE30S15/8UNCF	482-03050	PB49148-000
9120091028	GE30S15/8UNOMDCF	482-03455	PB49148-000
9120091029	GE30S1NPT71	482-03455	PB49148-004
9120091030	GE30S1NPT71X	482-03650	PB49148-004
9120091031	GE30S1NPTCF	482-03650	PB49149-000
9120091044	GE30S1NPTCFX	482-03890	PB49149-000
9120091057	GE30S3/4NPT71	482-03890	PB49149-001
9120091058	GE30S3/4NPT71X	4820-40-01050-0000-000000	PB49149-001
9120091059	GE30S3/4NPTCFX	4820-40-01050-0000-000000	PB49149-003
9120091060	GE30SM33X2CFX	4820-40-01050-0010-000000	PB49149-003
9120091061	GE30SM71	4820-40-01050-0010-000000	PB49149-004
9120091067	GE30SM71X	4820-40-01210-0000-000000	PB49149-004
9120091069	GE30SMCF	4820-40-01210-0000-000000	PB49149-N000
9120091074	GE30SMCFX	4820-40-01360-0000-000000	PB49149-N000
9120091087	GE30SMEDCF	4820-40-01360-0000-000000	PB49149-N001
9120091095	GE30SMEDOMD71	4820-40-01400-0000-000000	PB49149-N001
9120092001	GE30SMEDOMDCF	4820-40-01400-0000-000000	PB49149-N004
9120092010	GE30SMEDSTOSSORCF	482-07000	PB49149-N004
9120092014	GE30SMEDVITOMDCF	482-07000	PB4920G-000
9120092015	GE30SR	4821-00400	PB4920G-000
9120092016	GE30SR11/2CF	4821-00400	PB49249-000
9120092018	GE30SR11/2CFX	4821-00600	PB49249-000
9120092020	GE30SR11/2ED71	4821-00600	PB49249-001
9120092021	GE30SR11/2EDCF	4821-00800	PB49249-001
9120092023	GE30SR11/2EDOMD71	4821-00800	PB49249-003
9120092029	GE30SR11/2EDOMDCF	4821-00920	PB49249-003
9120092032	GE30SR11/2EDVOMDCF	4821-00920	PB49249-004
9120092036	GE30SR171	4821-01200	PB49249-004
9120092037	GE30SR171X	4821-01200	PB49249-N000
9120092041	GE30SR1CF	4822-00250	PB49249-N000
9120092046	GE30SR1CFX	4822-00250	PB49349-000
9120092047	GE30SR1ED71	4822-00400	PB49349-000
9120092055	GE30SR1EDCF	4822-00400	PB49349-003
9120092058	GE30SR1EDOMD71	4822-00430	PB49349-003
9120092059	GE30SR1EDOMDCF	4822-00430	PB49349-004
9120092060	GE30SR1EDVITCF	4822-00500	PB49349-004
9120092071	GE30SR1EDVOMDCF	4822-00500	PB4940K-000
9120092079	GE30SR1KEGCFX	4822-00570	PB4940K-000
9120092080	GE30SR1MS	4822-00570	PB49448-000
9120092082	GE30SR3/471X	4822-00600	PB49448-000
9120092085	GE30SR3/4ACF	4822-00600	PB49449-000
9120092086	GE30SR3/4EDCF	4822-00650	PB49449-000

9120092092	GE30SR3/4EDOMDCF	4822-00650	PB49449-003
9120092096	GE30SR71	4822-00700	PB49449-003
9120092101	GE30SR71X	4822-00700	PB49449-004
9120092103	GE30SRACFX	4822-00750	PB49449-004
9120092112	GE30SRCF	4822-00750	PB4950K-000
9120092113	GE30SRCFX	4822-00780	PB4950K-000
9120092132	GE30SRED71	4822-00780	PB49549-000
9120092136	GE30SREDCF	4822-00790	PB49549-000
9120092139	GE30SREDOMD71	4822-00790	PB49549-003
9120092144	GE30SREDOMDCF	4822-00800	PB49549-003
9120092148	GE30SREDSTOSSORCF	4822-00800	PB49549-004
9120092151	GE30SREDVITCF	4822-00850	PB49549-004
9120092152	GE30SREDVITOMDCF	4822-00850	PB495NN-000
9120092184	GE30SRMS	4822-00880	PB495NN-000
9120092192	GE30SRMSX	4822-00880	PB5430K-021
9120092196	GE30ZS15/16UNCF	4822-00900	PB5430K-021
9120092214	GE30ZS15/8UNCF	4822-00900	PB5430U-020
9120092215	GE30ZSMEDCF	4822-00920	PB5430U-020
9120092216	GE30ZSR11/2ED71	4822-00920	PB5430U-021
9120092218	GE30ZSR11/2EDCF	4822-00947	PB5430U-021
9120092219	GE30ZSR11/2EDNBR71	4822-00947	PB5430U-023
9120092222	GE30ZSR1ED71	4822-01000	PB5430U-023
9120092244	GE30ZSR1EDCF	4822-01000	PB5430U-041
9120092253	GE30ZSR1EDNBR71	4822-01050	PB5430U-041
9120092260	GE30ZSRED71	4822-01050	PB5430U-053
9120092264	GE30ZSREDCF	4822-01210	PB5430U-053
9120092271	GE30ZSREDNBR71	4822-01210	PB54349-000
9120092272	GE30ZSREDVITCF	4822-01220	PB54349-000
9120092278	GE35L11/2NPTCFX	4822-01220	PB54349-001
9120092299	GE35L11/4NPT71	4822-01250	PB54349-001
9120092315	GE35L11/4NPT71X	4822-01250	PB54349-002
9120092319	GE35L11/4NPTCF	4822-01260	PB54349-002
9120092331	GE35L11/4NPTCFX	4822-01260	PB54349-003
9120092334	GE35L11/4NPTMS	4822-01295	PB54349-003
9120092341	GE35L15/16UNCF	4822-01295	PB54349-020
9120092342	GE35L15/16UNOMDCF	4822-01300	PB54349-020
9120092343	GE35L15/16UNVOMDCF	4822-01300	PB54349-020EX
9120092345	GE35L15/8UNCF	4822-01450	PB54349-020EX
9120092346	GE35L15/8UNFCF	4822-01450	PB54349-021
9120092348	GE35L15/8UNFVOMDCF	4822-01473	PB54349-021
9120092355	GE35L15/8UNOMDCF	4822-01473	PB54349-021EX
9120092364	GE35L1NPT71X	4822-01700	PB54349-021EX
9120092369	GE35L1NPTCF	4822-01700	PB54349-022
9120092381	GE35L1NPTCFX	4822-01750	PB54349-022
9120092404	GE35LM33X2EDCF	4822-01750	PB54349-023
9120092429	GE35LM48X2EDOMDCF	4822-01800	PB54349-023
9120092430	GE35LM71	4822-01800	PB54349-030
9120092458	GE35LM71X	4822-01835	PB54349-030
9120092477	GE35LMCF	4822-01835	PB54349-033
9120092480	GE35LMCFX	4822-01870	PB54349-033
9120092501	GE35LMED71	4822-01870	PB54349-033EX
9120092502	GE35LMEDCF	4822-02000	PB54349-033EX
9120092506	GE35LMEDOMD71	4822-02000	PB54349-040

9120092556	GE35LMEDOMDCF	4822-02150	PB54349-040
9120092557	GE35LMEDVITCF	4822-02150	PB54349-041
9120092596	GE35LMEDVITOMDCF	4822-02500	PB54349-041
9120092597	GE35LR1/271	4822-02500	PB54349-042
9120092601	GE35LR1/271X	4822-02630	PB54349-042
9120098505	GE35LR1/2CFX	4822-02630	PB54349-043
9120098509	GE35LR1/2EDCF	4822-02635	PB54349-043
9120099611	GE35LR11/271	4822-02635	PB54349-050
9120099612	GE35LR11/271X	4822-02800	PB54349-050
9120099613	GE35LR11/2CF	4822-02800	PB54349-053
9120099614	GE35LR11/2CFX	482245C7	PB54349-053
9120099637	GE35LR11/2ED71	482245C7	PB54349-200
9120099650	GE35LR11/2EDCF	4823-00125	PB54349-200
9120099656	GE35LR11/2EDOMD71	4823-00125	PB54349-202
9120099657	GE35LR11/2EDOMDCF	4823-00380	PB54349-202
9120099658	GE35LR11/2EDVITCF	4823-00380	PB54349-N003
9120099662	GE35LR11/2EDVOMDCF	4823-00400	PB54349-N003
9120099664	GE35LR11/4KEG71	4823-00400	PB54349-N022
9120099666	GE35LR11/4KEGCF	4823-00430	PB54349-N022
9120099680	GE35LR11/4KEGCFX	4823-00430	PB54349-N030
9120099686	GE35LR171	4823-00500	PB54349-N030
9120099706	GE35LR171X	4823-00500	PB548-02DHCSS
9120099708	GE35LR1CF	4823-00570	PB548-02DHCSS
9120099711	GE35LR1CFX	4823-00570	PB548G02DHCSS
9120099712	GE35LR1ED71	4823-00600	PB548G02DHCSS
9120099713	GE35LR1EDCF	4823-00600	PB55149-032
9120099714	GE35LR1EDDPR71CF	4823-00620	PB55149-032
9120099715	GE35LR1EDOMD71	4823-00620	PB55249-000
9120099717	GE35LR1EDOMDCF	4823-00650	PB55249-000
9120099718	GE35LR1EDVITCF	4823-00650	PB55249-002
9120099806	GE35LR1EDVITOMDCF	4823-00660	PB55249-002
9120099807	GE35LR1KEGCF	4823-00660	PB55249-016
9120099812	GE35LR1KEGCFX	4823-00700	PB55249-016
9120099814	GE35LR1MS	4823-00700	PB55249-027
9120099825	GE35LR3/471	4823-00750	PB55249-027
9120099841	GE35LR3/471X	4823-00750	PB55249-042
9120099901	GE35LR3/4CF	4823-00780	PB55249-042
9120099904	GE35LR3/4CFX	4823-00780	PB55249-060
9120099905	GE35LR3/4EDOMD71	4823-00790	PB55249-060
9120099906	GE35LR3/4EDOMDCF	4823-00790	PB55249-070
9120099907	GE35LR3/4KEGCF	4823-00798	PB55249-070
9120099909	GE35LR71	4823-00798	PB55249-N000
9120099910	GE35LR71X	4823-00800	PB55249-N000
9120099911	GE35LRACFX	4823-00800	PB55249-N002
9120099912	GE35LRCF	4823-00825	PB55249-N002
9120099915	GE35LRCFX	4823-00825	PB552NN-000
9120099917	GE35LRDPR71CF	4823-00850	PB552NN-000
9120099927	GE35LRED	4823-00850	PB55302-024
9120099928	GE35LRED71	4823-00860	PB55302-024
9120099930	GE35LREDCF	4823-00860	PB5530G-016
9120099937	GE35LREDDPR71CF	4823-00880	PB5530G-016
9120099953	GE35LREDMS	4823-00880	PB5530G-027
9120099962	GE35LREDOMD71	4823-00900	PB5530G-027

9120099963	GE35LREDOMDCF	4823-00900	PB5530H-001
9120099964	GE35LREDVITCF	4823-00920	PB5530H-001
9120099965	GE35LREDVITOMDCF	4823-00920	PB5530K-000
9120099966	GE35LRMS	4823-00950	PB5530K-000
9120099967	GE35LRSTOSSCF	4823-00950	PB55313-001
9120099968	GE35ZL15/16UNCF	4823-00980	PB55313-001
9120099995	GE35ZL15/8UN71	4823-00980	PB55330-080
9120099999	GE35ZL15/8UNCF	4823-01000	PB55330-080
9120100213	GE35ZLMED71	4823-01000	PB55349-000
9120100214	GE35ZLMEDCF	4823-01160	PB55349-000
9120100226	GE35ZLMEDVITCF	4823-01160	PB55349-002
9120100227	GE35ZLR11/2ED71	4823-01210	PB55349-002
9120100240	GE35ZLR11/2EDCF	4823-01210	PB55349-008
9120100256	GE35ZLR11/4KEGCF	4823-01220	PB55349-008
9120100277	GE35ZLR1ED71	4823-01220	PB55349-009
9120100282	GE35ZLR1EDCF	4823-01250	PB55349-009
9120100288	GE35ZLR1EDVCF	4823-01250	PB55349-009
9120100346	GE35ZLR3/4CF	4823-01260	PB55349-009
9120100348	GE35ZLRED71	4823-01260	PB55349-012
9120100397	GE35ZLREDCF	4823-01295	PB55349-012
9120199904	GE35ZLREDVITCF	4823-01295	PB55349-016
9120199923	GE388047U001	4823-01300	PB55349-016
9120199924	GE388048U001	4823-01300	PB55349-017
9120199927	GE38S11/2NPT71	4823-01450	PB55349-017
9120199928	GE38S11/2NPT71X	4823-01450	PB55349-026
9120199941	GE38S11/2NPTCF	4823-01525	PB55349-026
9120199943	GE38S11/2NPTCFX	4823-01525	PB55349-027
9120199944	GE38S11/4NPT71	4823-01550	PB55349-027
9120199945	GE38S11/4NPT71X	4823-01550	PB55349-027
9120199946	GE38S11/4NPTCF	4823-01700	PB55349-027
9120199949	GE38S11/4NPTCFX	4823-01700	PB55349-033
9120199950	GE38S15/8UN71	4823-01750	PB55349-033
9120199951	GE38S15/8UNCF	4823-01750	PB55349-034
9120199952	GE38S15/8UNOMDCF	4823-01800	PB55349-034
9120199953	GE38S17/8UNOMDCF	4823-01800	PB55349-039
9120199954	GE38S1NPT71	4823-01835	PB55349-039
9120199956	GE38S1NPT71X	4823-01835	PB55349-060
9120199959	GE38S1NPTCF	4823-01870	PB55349-060
9121545064	GE38S1NPTCFX	4823-01870	PB55349-070
9121546003	GE38SM71	4823-02000	PB55349-070
9121553026	GE38SM71X	4823-02000	PB55349-N000
9121565201	GE38SMCF	4823-02150	PB55349-N000
9121565201	GE38SMCFX	4823-02150	PB55349-N009
9121565202	GE38SMED71	4823-02200	PB55349-N009
9121565202	GE38SMEDCF	4823-02200	PB55349-N012
9121565203	GE38SMEDOMD71	4823-02325	PB55349-N012
9121565203	GE38SMEDOMDCF	4823-02325	PB55349-N039
9121565204	GE38SMEDSTOSSORCF	4823-02500	PB55349-N039
9121565204	GE38SR	4823-02500	PB55349-N070
9121565205	GE38SR11/2KEGCF	4823-02600	PB55349-N070
9121565205	GE38SR11/471	4823-02600	PB5550G-047
9121565206	GE38SR11/471X	4823-02630	PB5550G-047
9121565206	GE38SR11/4CF	4823-02630	PB55513-081

9121565207	GE38SR11/4CFX	4823-02635	PB55513-081
9121565207	GE38SR11/4ED71	4823-02635	PB55549-000
9121565208	GE38SR11/4EDCF	4823-02800	PB55549-000
9121565208	GE38SR11/4EDOMD71	4823-02800	PB55549-005
9121565209	GE38SR11/4EDOMDCF	4823-02835	PB55549-005
9121565209	GE38SR11/4EDVOMDCF	4823-02835	PB55549-006
9121565252	GE38SR11/4MS	4823-03100	PB55549-006
9121565252	GE38SR171	4823-03100	PB55549-006
9121565253	GE38SR1CFX	4823-04000	PB55549-006
9121565253	GE38SR1EDCF	4823-04000	PB55549-047
9121565257	GE38SR1EDOMD71	4824-01000	PB55549-047
9121565257	GE38SR1EDOMDCF	4824-01000	PB55549-075
9121565258	GE38SR71	4824-01300	PB55549-075
9121565258	GE38SR71X	4824-01300	PB55549-077
9121565259	GE38SRCF	4825-00710	PB55549-077
9121565259	GE38SRCFX	4825-00710	PB55549-N000
9121568601	GE38SRED71	4825-00800	PB55549-N000
9121568601	GE38SREDCF	4825-00800	PB55549-N005
9121568602	GE38SREDOMD71	4825-00920	PB55549-N005
9121568602	GE38SREDOMDCF	4825-00920	PB55549-N006
9121568603	GE38SREDSA1OMD71	4825-01000	PB55549-N006
9121568603	GE38SREDVITCF	4825-01000	PB5560E-000
9121568604	GE38SREDVITOMDCF	4825-01300	PB5560E-000
9121568604	GE38SRMS	4825-01300	PB5560G-000
9121568605	GE38SRSTOSS71X	4825-01700	PB5560G-000
9121568605	GE38SRSTOSSCF	4825-01700	PB5560G-025
9121568606	GE38ZS15/8UNCF	4826-00100	PB5560G-025
9121568606	GE38ZSMED71	4826-00100	PB5560G-047
9121568607	GE38ZSMEDCF	4826-00710	PB5560G-047
9121568607	GE38ZSR11/4ED71	4826-00710	PB5560H-000
9121568608	GE38ZSR11/4EDCF	4826-00800	PB5560H-000
9121568608	GE38ZSR1EDCF	4826-00800	PB5560K-000
9121568609	GE38ZSRED71	4826-01000	PB5560K-000
9121568609	GE38ZSREDCF	4826-01000	PB5560K-100
9121569304	GE38ZSREDNBR71	4826-01300	PB5560K-100
9121569304	GE38ZSREDVITCF	4826-01300	PB5560K-200
9121569305	GE42L11/2NPT71	4826-01700	PB5560K-200
9121569305	GE42L11/2NPT71X	4826-01700	PB5560S-049
9121569306	GE42L11/2NPTCF	4826-03500	PB5560S-049
9121569306	GE42L11/2NPTCFX	4826-03500	PB5560S-076
9121569307	GE42L11/4NPT71	482605C2	PB5560S-076
9121569307	GE42L11/4NPT71X	482605C2	PB5560Y-020
9121580321	GE42L11/4NPTCF	482606160C2	PB5560Y-020
9121580339	GE42L11/4NPTCFX	482606160C2	PB55611-062
9121580343	GE42L15/8UNCF	4826063D	PB55611-062
9121580389	GE42L15/8UNOMDCF	4826063D	PB55611-062
9121581021	GE42L17/8UNCF	482606C2	PB55611-062
9121581024	GE42L17/8UNOMDCF	482606C2	PB55611-944
9121581025	GE42LM27X2EDOMDCF	482635S5	PB55611-944
9121581030	GE42LM42X2CF	482635S5	PB55613-082
9121581040	GE42LM42X2CFX	482635S6	PB55613-082
9121581042	GE42LM71	482635S6	PB55630-020
9121583023	GE42LM71X	482722P1	PB55630-020

9121590291	GE42LMCF	482722P1	PB55630-124
9121590291	GE42LMCFX	4827253D	PB55630-124
9121590293	GE42LMDPR71CF	4827253D	PB55648-209
9121590293	GE42LMED71	482725C2	PB55648-209
9121591091	GE42LMEDCF	482725C2	PB55649-000
9121591091	GE42LMEDOMD71	4827303D	PB55649-000
9121591092	GE42LMEDOMDCF	4827303D	PB55649-000EX
9121591092	GE42LMEDVITOMDCF	482730A5	PB55649-000EX
9121591093	GE42LR11/2KEG71	482730A5	PB55649-005
9121591093	GE42LR11/2KEG71X	482730C2	PB55649-005
9121591094	GE42LR11/2KEGCF	482730C2	PB55649-006
9121591094	GE42LR11/2KEGCFX	482740C2	PB55649-006
9121594805	GE42LR11/2KEGMS	482740C2	PB55649-006EX
9121594805	GE42LR11/471	48287001N7	PB55649-006EX
9121594809	GE42LR11/471X	48287001N7	PB55649-007
9121594809	GE42LR11/4CF	483-00080	PB55649-007
9121594812	GE42LR11/4CFX	483-00080	PB55649-009
9121594812	GE42LR11/4ED71	483-00100	PB55649-009
9121597097	GE42LR11/4EDCF	483-00100	PB55649-020
9121597097	GE42LR11/4EDDPR71CF	483-00105	PB55649-020
9121644601	GE42LR11/4EDOMD71	483-00105	PB55649-023
9121644601	GE42LR11/4EDOMDCF	483-00125	PB55649-023
9121644602	GE42LR11/4EDVITCF	483-00125	PB55649-025
9121644602	GE42LR11/4EDVOMDCF	483-00150	PB55649-025
9121644603	GE42LR11/4KEGCF	483-00150	PB55649-027
9121644603	GE42LR11/4KEGCFX	483-00200	PB55649-027
9121644604	GE42LR171	483-00200	PB55649-032
9121644604	GE42LR171X	483-00206	PB55649-032
9121644605	GE42LR1CF	483-00206	PB55649-034
9121644605	GE42LR1CFX	483-00220	PB55649-034
9121644606	GE42LR1ED71	483-00220	PB55649-041
9121644606	GE42LR1EDCF	483-00250	PB55649-041
9121644607	GE42LR1EDDPR71CF	483-00250	PB55649-047
9121644607	GE42LR1EDOMD71	483-00260	PB55649-047
9121644608	GE42LR1EDOMDCF	483-00260	PB55649-047
9121644608	GE42LR1EDVITCF	483-00300	PB55649-047
9121644701	GE42LR1EDVITOMDCF	483-00300	PB55649-048
9121644701	GE42LR2EDOMDCF	483-00330	PB55649-048
9121644702	GE42LR71	483-00330	PB55649-057
9121644702	GE42LR71X	483-00380	PB55649-057
9121644703	GE42LRACFX	483-00380	PB55649-059
9121644703	GE42LRCF	483-00400	PB55649-059
9121644704	GE42LRCFX	483-00400	PB55649-063
9121644704	GE42LRDPR71CF	483-00430	PB55649-063
9121644705	GE42LRED	483-00430	PB55649-070
9121644705	GE42LRED71	483-00450	PB55649-070
9121644706	GE42LREDCF	483-00450	PB55649-071
9121644706	GE42LREDDPR71CF	483-00475	PB55649-071
9121644707	GE42LREDMS	483-00475	PB55649-072
9121644707	GE42LREDOMD71	483-00500	PB55649-072
9121644708	GE42LREDOMDCF	483-00500	PB55649-075
9121644708	GE42LREDOMDMS	483-00510	PB55649-075
9121644801	GE42LREDVITCF	483-00510	PB55649-075EX

9121644801	GE42LREDVITOMDCF	483-00515	PB55649-075EX
9121644802	GE42LRMS	483-00515	PB55649-077
9121644802	GE42LRMSX	483-00530	PB55649-077
9121644803	GE42LRSTOSSCF	483-00530	PB55649-077
9121644803	GE42ZL15/8UNCF	483-00540	PB55649-077
9121644805	GE42ZL17/8UNCF	483-00540	PB55649-078
9121644805	GE42ZLMED71	483-00550	PB55649-078
9121644901	GE42ZLMEDCF	483-00550	PB55649-079
9121644901	GE42ZLR11/4ED71	483-00560	PB55649-079
9121644902	GE42ZLR11/4EDCF	483-00560	PB55649-080
9121644902	GE42ZLR11/4EDVITCF	483-00570	PB55649-080
9121644903	GE42ZLR1ED71	483-00570	PB55649-100
9121644903	GE42ZLR1EDCF	483-00575	PB55649-100
9121644904	GE42ZLR1EDVITCF	483-00575	PB55649-100
9121644904	GE42ZLRED71	483-00600	PB55649-100
9121644905	GE42ZLREDCF	483-00600	PB55649-100EX
9121644905	GE42ZLREDVITCF	483-00620	PB55649-100EX
9121644906	GE463568U001	483-00620	PB55649-101
9121644906	GE465853U002	483-00630	PB55649-101
9121644907	GE467159U001	483-00630	PB55649-101EX
9121644907	GEARBOX MOUNTING	483-00640	PB55649-101EX
9121644908	GEB1/2CFX	483-00640	PB55649-109
9121644908	GEB1/2ED71	483-00650	PB55649-109
9121647001	GEB1/2EDCF	483-00650	PB55649-200
9121647001	GEB11/4X11/2EDCF	483-00660	PB55649-200
9121647002	GEB3/4EDCFX	483-00660	PB55649-N000
9121647002	GEH SCM-1XX BKT	483-00665	PB55649-N000
9121647003	GEM-VM50	483-00665	PB55649-N000EX
9121647003	GEO04LLM10X1CF	483-00700	PB55649-N000EX
9121647005	GEO04LLM10X1OMDCF	483-00700	PB55649-N005
9121647005	GEO04LLM71	483-00730	PB55649-N005
9121655101	GEO04LLMCF	483-00730	PB55649-N006
9121655101	GEO04LLMOMDCF	483-00750	PB55649-N006
9121655201	GEO04ZLLM10X1CF	483-00750	PB55649-N023
9121655201	GEO04ZLLMCF	483-00780	PB55649-N023
9121655301	GEO06LLMCF	483-00780	PB55649-N075
9121655301	GEO06LLMOMDCF	483-00790	PB55649-N075
9121655302	GEO06LLMVITOMDCF	483-00790	PB55649-N077
9121655302	GEO06LMCF	483-00800	PB55649-N077
9121655401	GEO06LMOMDCF	483-00800	PB556NN-000
9121655401	GEO06LMVITOMDCF	483-00805	PB556NN-000
9121655407	GEO06SMCF	483-00805	PB55749-002
9121655407	GEO06SMOMDCF	483-00830	PB55749-002
9121655501	GEO06ZLLMCF	483-00830	PB55749-052
9121655501	GEO06ZLM71	483-00850	PB55749-052
9121655507	GEO06ZLMCF	483-00850	PB5580G-060
9121655507	GEO06ZSMCF	483-00880	PB5580G-060
9121655601	GEO08LM14X1.5CF	483-00880	PB55816-200
9121655601	GEO08LM14X1.5OMDCF	483-00900	PB55816-200
9121655607	GEO08LMCF	483-00900	PB55816-202
9121655607	GEO08LMOMD71	483-00915	PB55816-202
9121658043	GEO08LMOMDCF	483-00915	PB55830-070
9121658043	GEO08LMVITCF	483-00960	PB55830-070

9121658046	GEO08LMVITOMDCF	483-00960	PB55849-000
9121658046	GEO08SM12X1.5OMDCF	483-00965	PB55849-000
9121658060	GEO08SMCF	483-00965	PB55849-002
9121658060	GEO08SMOMDCF	483-01000	PB55849-002
9121658061	GEO08SMVITOMDCF	483-01000	PB55849-002
9121658061	GEO08ZLMCF	483-01050	PB55849-002
9121658063	GEO10LM12X1.5CF	483-01050	PB55849-007
9121658063	GEO10LM12X1.5OMDCF	483-01100	PB55849-007
9121658064	GEO10LM16X1.5CF	483-01100	PB55849-012
9121658064	GEO10LM16X1.5OMDCF	483-01110	PB55849-012
9121658065	GEO10LM22X1.5OMDCF	483-01110	PB55849-012
9121658065	GEO10LM71	483-01130	PB55849-012
9121658066	GEO10LMCF	483-01130	PB55849-014
9121658066	GEO10LMOMD71	483-01150	PB55849-014
9121658070	GEO10LMOMDCF	483-01150	PB55849-016
9121658070	GEO10LMVITOMDCF	483-01200	PB55849-016
9121658071	GEO10SM14X1.5CF	483-01200	PB55849-020
9121658071	GEO10SMCF	483-01210	PB55849-020
9121658072	GEO10SMOMD71	483-01210	PB55849-058
9121658072	GEO10SMOMDCF	483-01215	PB55849-058
9121658073	GEO10SMVITOMDCF	483-01215	PB55849-080
9121658073	GEO10ZLMCF	483-01220	PB55849-080
9121658074	GEO10ZLMSSACF	483-01220	PB55849-226
9121658074	GEO10ZSMCF	483-01240	PB55849-226
9121658075	GEO10ZSMVITCF	483-01240	PB55849-N000
9121658075	GEO12LM14X1.5CF	483-01250	PB55849-N000
9121658076	GEO12LM14X1.5OMDCF	483-01250	PB55849-N002
9121658076	GEO12LM14X1.5VOMDCF	483-01260	PB55849-N002
9121658077	GEO12LM18X1.5OMDCF	483-01260	PB558G02DGCSS
9121658077	GEO12LM22X1.5CF	483-01270	PB558G02DGCSS
9121658078	GEO12LM22X1.5OMDCF	483-01270	PB558NN-002
9121658078	GEO12LM71	483-01295	PB558NN-002
9121658079	GEO12LMCF	483-01295	PB55900-016
9121658079	GEO12LMCFX	483-01300	PB55900-016
9121658099	GEO12LMOMD71	483-01300	PB55902-024
9121658099	GEO12LMOMDCF	483-01320	PB55902-024
9121658404	GEO12LMVITOMDCF	483-01320	PB55903-030
9121658404	GEO12SMCF	483-01350	PB55903-030
9121658802	GEO12SMOMD71	483-01350	PB5590E-000
9121658802	GEO12SMOMDCF	483-01380	PB5590E-000
9121658803	GEO12SMVITOMDCF	483-01380	PB5590G-016
9121658803	GEO12ZLM71	483-01400	PB5590G-016
9121658804	GEO12ZLMCF	483-01400	PB5590H-001
9121658804	GEO12ZLMVITCF	483-01415	PB5590H-001
9121659195	GEO12ZSMCF	483-01415	PB5590K-000
9121659195	GEO15LM16X1.5OMDCF	483-01450	PB5590K-000
9121659196	GEO15LM22OMDCF	483-01450	PB5590K-002
9121659196	GEO15LM22PEOMDCFVOL	483-01500	PB5590K-002
9121659197	GEO15LMCF	483-01500	PB5590K-200
9121659197	GEO15LMOMDCF	483-01520	PB5590K-200
9121659198	GEO15LMVITOMDCF	483-01520	PB5590S-073
9121659198	GEO15ZLMCF	483-01550	PB5590S-073
9121659199	GEO16SMCF	483-01550	PB5590W-001

9121659199	GEO16SMOMD71	483-01650	PB5590W-001
9121679580	GEO16SMOMDCF	483-01650	PB5590Y-020
9121679580	GEO16SMVITOMDCF	483-01680	PB5590Y-020
9121679581	GEO16ZSM27X2CF	483-01680	PB55922-015
9121679581	GEO16ZSMCF	483-01700	PB55922-015
9121679582	GEO18LM18OMDCF	483-01700	PB5592R-020
9121679582	GEO18LM71	483-01730	PB5592R-020
9121679583	GEO18LMCF	483-01730	PB55930-026
9121679583	GEO18LMOMD71	483-01750	PB55930-026
9121679920	GEO18LMOMDCF	483-01750	PB55930-026
9121679920	GEO18LMVITOMDCF	483-01800	PB55930-026
9121679921	GEO18ZLM71	483-01800	PB55930-N048
9121679921	GEO18ZLMCF	483-01830	PB55930-N048
9121679922	GEO18ZLMSSACF	483-01830	PB55947-004EX
9121679922	GEO20SM22X1.5OMDCF	483-01870	PB55947-004EX
9121679923	GEO20SMCF	483-01870	PB55947-018
9121679923	GEO20SMOMDCF	483-01900	PB55947-018
9121679924	GEO20SMVITOMDCF	483-01900	PB55948-209
9121679924	GEO20ZSMCF	483-02000	PB55948-209
9121711655	GEO22LM22X1.5OMDCF	483-02000	PB55949-000
9121711655	GEO22LM26X1.5OMDCF	483-02070	PB55949-000
9121715901	GEO22LM27X2CF	483-02070	PB55949-002
9121715901	GEO22LM27X2OMD71	483-02100	PB55949-002
9121715902	GEO22LM27X2OMDCF	483-02100	PB55949-006
9121715902	GEO22LM27X2VITOMDCF	483-02135	PB55949-006
9121715903	GEO22LM33X2VITOMDCF	483-02135	PB55949-006EX
9121715903	GEO22ZLM27X2CF	483-02150	PB55949-006EX
9121715904	GEO25SM27X2OMDCF	483-02150	PB55949-007
9121715904	GEO25SMCF	483-02200	PB55949-007
9121715905	GEO25SMOMDCF	483-02200	PB55949-008
9121715905	GEO25SMVITOMDCF	483-02230	PB55949-008
9121715906	GEO25ZSMCF	483-02230	PB55949-010
9121715906	GEO28LM27X2OMDCF	483-02250	PB55949-010
9121715907	GEO28LMCF	483-02250	PB55949-011
9121715907	GEO28LMOMDCF	483-02285	PB55949-011
9121715924	GEO28LMVITOMDCF	483-02285	PB55949-012
9121715924	GEO28ZLMCF	483-02300	PB55949-012
9121715925	GEO30SMOMDCF	483-02300	PB55949-012
9121715925	GEO30ZSMCF	483-02400	PB55949-012
9121715933	GEO35LM33X2OMDCF	483-02400	PB55949-014
9121715933	GEO35LMCF	483-02450	PB55949-014
9121715934	GEO35LMOMDCF	483-02450	PB55949-016
9121715934	GEO38SMOMDCF	483-02500	PB55949-016
9121715935	GEO42LM42X2OMDCF	483-02500	PB55949-020
9121715935	GEO42LMCF	483-02600	PB55949-020
9121715936	GEO42LMOMDCF	483-02600	PB55949-038
9121715936	GF400S	483-02650	PB55949-038
9121715937	GFG2PK0.6-10	483-02650	PB55949-040
9121715937	GFG2PK0.6V-10	483-02700	PB55949-040
9121715941	GFG2PK1.0-10	483-02700	PB55949-044
9121715941	GFG2PK1.6-10	483-02735	PB55949-044
9121715945	GFG2PK1.6V-10	483-02735	PB55949-048
9121715945	GFG2PK12-10	483-02750	PB55949-048

9121715946	GFG2PK12V-10	483-02750	PB55949-049
9121715946	GFG2PK18-10	483-02800	PB55949-049
9121715947	GFG2PK18V-10	483-02800	PB55949-058
9121715947	GFG2PK3.2-10	483-02950	PB55949-058
9121715950	GFG2PK3.2V-10	483-02950	PB55949-065
9121715950	GFG2PK6.3-10	483-03200	PB55949-065
9121715951	GFG2PK6.3V-10	483-03200	PB55949-065
9121715951	GFG2PKC0.6-10	483-03286	PB55949-065
9121715965	GFG2PKC0.6-10X	483-03286	PB55949-071
9121715965	GFG2PKC0.6V-10	483-04350	PB55949-071
9121715967	GFG2PKC1.0-10	483-04350	PB55949-073
9121715967	GFG2PKC1.0-10X	483-04570	PB55949-073
9121715969	GFG2PKC1.0V-10	483-04570	PB55949-080
9121715969	GFG2PKC1.0V-10X	4831FIL	PB55949-080
9121715980	GFG2PKC1.6-10	4831FIL	PB55949-081
9121715980	GFG2PKC1.6-10X	4832 10 13	PB55949-081
9121715981	GFG2PKC1.6V-10	4832 10 17	PB55949-082
9121715981	GFG2PKC12-10	4832 15 21	PB55949-082
9121715985	GFG2PKC18-10	4832 20 27	PB55949-084
9121715985	GFG2PKC18-10X	4832 25 34	PB55949-084
9121715991	GFG2PKC18V-10	4832 32 42	PB55949-084
9121715991	GFG2PKC18V-10X	4832 40 49	PB55949-084
9121716225	GFG2PKC3.2-10	4832 50 48	PB55949-087
9121716225	G-FG2PKC3.2-10	48327002C4	PB55949-087
9121717014	GFG2PKC3.2-10X	48327002C4	PB55949-090
9121717014	GFG2PKC3.2V-10	4832703P	PB55949-090
9121717016	GFG2PKC6.3-10	4832703P	PB55949-092
9121717016	GFG2PKC6.3-10X	483270C2	PB55949-092
9121717018	GFG2PKC6.3V-10	483270C2	PB55949-200
9121717018	GFG2PKCS0.6-10	4832FIL	PB55949-200
9121717019	GFG2PKCS0.6-10X	4832FIL	PB55949-221
9121717019	GFG2PKCS0.6V-10	4833713D	PB55949-221
9121717020	GFG2PKCS1.0-10	4833713D	PB55949-222
9121717020	GFG2PKCS1.0-10X	483371C2	PB55949-222
9121717028	GFG2PKCS1.0V-10	483371C2	PB55949-N000
9121717028	GFG2PKCS1.0V-10X	483371C4	PB55949-N000
9121717029	GFG2PKCS1.6-10	483371C4	PB55949-N002
9121717029	GFG2PKCS1.6-10X	4833FIL	PB55949-N002
9121717105	GFG2PKCS1.6V-10	4833FIL	PB55949-N008
9121717105	GFG2PKCS12-10	4834664P	PB55949-N008
9121718905	GFG2PKCS12-10X	4834664P	PB55949-N016
9121718905	GFG2PKCS12V-10	483510P0	PB55949-N016
9121718906	GFG2PKCS18-10	483510P0	PB55949-N048
9121718906	GFG2PKCS18-10X	483510S5	PB55949-N048
9121718907	GFG2PKCS18V-10	483510S5	PB55949-N049
9121718907	GFG2PKCS18V-10X	483510S6	PB55949-N049
9121718915	GFG2PKCS3.2-10	483510S6	PB55949-N222
9121718915	GFG2PKCS3.2-10X	483520P0	PB55949-N222
9121718916	GFG2PKCS3.2V-10	483520P0	PB559NN-000
9121718916	GFG2PKCS6.3-10	483520S6	PB559NN-000
9121718926	GFG2PKCS6.3-10X	483520S6	PB559NN-001
9121718926	GFG2PKCS6.3V-10X	483541B5	PB559NN-001
9121718955	GFG2PKS0.6-10	483541B5	PB5620K-000

9121718955	GFG2PKS0.6V-10	483541B7	PB5620K-000
9121718961	GFG2PKS1.0-10	483541B7	PB56216-000
9121718961	GFG2PKS1.0V-10	483541P8	PB56216-000
9121718962	GFG2PKS1.6-10	483541P8	PB56249-000
9121718962	GFG2PKS1.6V-10	483541T1	PB56249-000
9121718963	GFG2PKS12-10	483541T1	PB56302-000
9121718963	GFG2PKS12V-10	48358001N7	PB56302-000
9121718964	GFG2PKS18-10	48358001N7	PB56303-030
9121718964	GFG2PKS18V-10	483590P0	PB56303-030
9121718965	GFG2PKS3.2-10	483590P0	PB56303-035
9121718965	GFG2PKS3.2V-10	483590S4	PB56303-035
9121718966	GFG2PKS6.3-10	483590S4	PB5630G-000
9121718966	GFG2PKS6.3V-10	483764B7	PB5630G-000
9121718967	GFS32/12GCF	483764B7	PB5630H-000
9121718967	GFS32/12GCFM	483764Q1	PB5630H-000
9121719001	GFS32/12GSS	483764Q1	PB5630K-000
9121719001	GFS32/12NCFM	483764Q9	PB5630K-000
9121719002	GFS32/12NSS	483764Q9	PB5630Y-000
9121719002	GFS32/15L71X	483764T1	PB5630Y-000
9121719004	GFS32/15LCF	483764T1	PB56313-000
9121719004	GFS32/15LCFX	483816C2	PB56313-000
9121719035	GFS32/15LOMDCF	483816C2	PB5632R-000
9121719035	GFS32/15LOMDCFU	4838244J	PB5632R-000
9121719036	GFS32/15ZLCF	4838244J	PB56348-000
9121719036	GFS32/16S71	483824B5	PB56348-000
9121719510	GFS32/16S71X	483824B5	PB56349-000
9121719510	GFS32/16SCF	483824B7	PB56349-000
9121719970	GFS32/16SCFX	483824B7	PB56349-004
9121720595	GFS32/16SOMDCF	483824P8	PB56349-004
9121720595	GFS32/16SOMDCFU	483824P8	PB56349-004
9121720596	GFS32/16ZS71	483824T1	PB56349-004
9121720596	GFS32/16ZSCF	483824T1	PB56349-010
9121720597	GFS32/18L71X	483824T6	PB56349-010
9121720597	GFS32/18LCF	483824T6	PB56349-010
9121720598	GFS32/18LCFX	48396001N7	PB56349-010
9121720598	GFS32/18LOMDCF	48396001N7	PB56349-N000
9121720601	GFS32/18LOMDCFU	484-00120	PB56349-N000
9121720601	GFS32/18ZLCF	484-00120	PB56349-N010
9121720602	GFS32/38GCFM	484-00125	PB56349-N010
9121720602	GFS32/38GSS	484-00125	PB56849-000EX
9121720603	GFS32/38NCFM	484-00150	PB56849-000EX
9121720603	GFS32/38NSS	484-00150	PB56849-N000
9121720604	GFS33/12GCF	484-00225	PB56849-N000
9121720604	GFS33/12GCFM	484-00225	PB5690G-000
9121720605	GFS33/12GSS	484-00250	PB5690G-000
9121720605	GFS33/12NCFM	484-00250	PB5690K-000
9121720606	GFS33/12NSS	484-00300	PB5690K-000
9121720606	GFS33/16S71X	484-00300	PB56949-000
9121720607	GFS33/16SCF	484-00320	PB56949-000
9121720607	GFS33/16SCFX	484-00320	PB56949-000EX
9121720608	GFS33/16SOMDCF	484-00360	PB56949-000EX
9121720608	GFS33/16SOMDCFU	484-00360	PB56949-004
9121720609	GFS33/16ZSCF	484-00500	PB56949-004

9121720609	GFS33/18LCF	484-00500	PB56949-N000
9121720610	GFS33/18LCFX	484-00550	PB56949-N000
9121720610	GFS33/18LOMDCF	484-00550	PB57249-100
9121720611	GFS33/18LOMDCFU	484-00580	PB57249-100
9121720611	GFS33/18ZLCF	484-00580	PB57249-100
9121720612	GFS33/20S71	484-00600	PB57249-100
9121720612	GFS33/20S71X	484-00600	PB57249-200
9121720613	GFS33/20SCF	484-00610	PB57249-200
9121720613	GFS33/20SCFX	484-00610	PB57249-200EX
9121720614	GFS33/20SOMD71	484-00650	PB57249-200EX
9121720614	GFS33/20SOMDCF	484-00650	PB57249-201
9121720615	GFS33/20SOMDCFU	484-00660	PB57249-201
9121720615	GFS33/20ZSCF	484-00660	PB57249-201
9121720616	GFS33/22L71X	484-00675	PB57249-201
9121720616	GFS33/22LCF	484-00675	PB57249-201EX
9121720617	GFS33/22LCFX	484-00700	PB57249-201EX
9121720617	GFS33/22LOMDCF	484-00700	PB57249-204
9121720618	GFS33/22LVITCF	484-00720	PB57249-204
9121720618	GFS33/22ZLCF	484-00720	PB57249-204EX
9121720619	GFS33/25S71X	484-00750	PB57249-204EX
9121720619	GFS33/25SCF	484-00750	PB5730G-201
9121720620	GFS33/25SCFX	484-00770	PB5730G-201
9121720620	GFS33/25SOMD71	484-00770	PB5731A-201
9121720621	GFS33/25SOMDCF	484-00800	PB5731A-201
9121720621	GFS33/25SOMDCFU	484-00800	PB57349-100
9121720622	GFS33/25ZSCF	484-00880	PB57349-100
9121720622	GFS33/28LCF	484-00880	PB57349-200
9121720623	GFS33/28LCFX	484-00900	PB57349-200
9121720623	GFS33/28LOMDCF	484-00900	PB57349-200EX
9121720624	GFS33/28LOMDCFU	484-01000	PB57349-200EX
9121720624	GFS33/28ZLCF	484-01000	PB57349-201
9121720625	GFS33/34GCFM	484-01020	PB57349-201
9121720625	GFS33/34GSS	484-01020	PB57349-201EX
9121720626	GFS33/34NCFM	484-01030	PB57349-201EX
9121720626	GFS33/34NSS	484-01030	PB57349-204
9121720627	GFS34/1GCF	484-01100	PB57349-204
9121720627	GFS34/1GCFM	484-01100	PB57349-204
9121720628	GFS34/1GSS	484-01130	PB57349-204
9121720628	GFS34/1NCFM	484-01130	PB57349-204EX
9121720630	GFS34/1NSS	484-01175	PB57349-204EX
9121720630	GFS34/20S71X	484-01175	PB57349-210
9121720633	GFS34/20SCF	484-01200	PB57349-210
9121720633	GFS34/20SOMDCF	484-01200	PB57349-215
9121720636	GFS34/20SOMDCFU	484-01250	PB57349-215
9121720636	GFS34/20ZSCF	484-01250	PB57349-N100
9121720637	GFS34/25S71X	484-01300	PB57349-N100
9121720637	GFS34/25SCF	484-01300	PB57349-N201
9121720638	GFS34/25SCFX	484-01350	PB57349-N201
9121720638	GFS34/25SOMD71	484-01350	PB57349-N204
9121720639	GFS34/25SOMDCF	484-01400	PB57349-N204
9121720639	GFS34/25SOMDCFU	484-01400	PB58249-000
9121742111	GFS34/25ZSCF	484-01500	PB58249-000
9121742111	GFS34/28L71X	484-01500	PB58249-001

9121742112	GFS34/28LCF	484-01600	PB58249-001
9121742112	GFS34/28LCFX	484-01600	PB58249-002
9121742113	GFS34/28LOMDCF	484-01625	PB58249-002
9121742113	GFS34/28LOMDCFU	484-01625	PB58349-000
9121742201	GFS34/28L-SP144CF	484-01700	PB58349-000
9121742201	GFS34/28LVITOMDCF	484-01700	PB58349-002
9121742202	GFS34/28ZLCF	484-01830	PB58349-002
9121742202	GFS34/30S71X	484-01830	PB58349-002
9121742203	GFS34/30SCF	484-02100	PB58349-002
9121742203	GFS34/30SCFX	484-02100	PB58349-035
9121742204	GFS34/30SOMD71	484-02110	PB58349-035
9121742204	GFS34/30SOMDCF	484-02110	PB58349-N000
9121950151	GFS34/30SOMDCFU	484-02200	PB58349-N000
9121950151	GFS34/30ZS71	484-02200	PB58349-N001
9122178008	GFS34/30ZSCF	484-02285	PB58349-N001
9122178011	GFS34/34GCF	484-02285	PB58349-N002
9122178014	GFS34/34GCFM	484-02300	PB58349-N002
9122178015	GFS34/34NCFM	484-02300	PB58516-000
9122226002	GFS34/34NSS	484-02320	PB58516-000
9122226002	GFS34/42LOMDCF	484-02320	PB58516-002
9122226003	GFS35/114GCF	484-02500	PB58516-002
9122226003	GFS35/114GCFM	484-02500	PB5851V-059EX
9122226004	GFS35/114GSS	484-04000	PB5851V-059EX
9122226004	GFS35/114NCFM	484-04000	PB58549-000
9122226005	GFS35/114NSS	4843FIL	PB58549-000
9122226005	GFS35/1GCF	4843FIL	PB58549-001
9122226006	GFS35/1GCFM	4844FIL	PB58549-001
9122226006	GFS35/1GSS	4844FIL	PB58549-002
9122226007	GFS35/1NCFM	4849901P	PB58549-002
9122226007	GFS35/1NSS	4849901P	PB58549-010
9122230308	GFS35/25S/10CF	4849903P	PB58549-010
9122230309	GFS35/25S/10OMDCF	4849903P	PB58549-013
9122265600	GFS35/25S71X	484990P0	PB58549-013
9122265600	GFS35/25SCF	484990P0	PB58549-016
9122268913	GFS35/25SCFX	485-00200	PB58549-016
9122268913	GFS35/25SOMDCF	485-00200	PB58549-031
9122292101	GFS35/25SOMDCFU	485-00240	PB58549-031
9122292101	GFS35/25SVITCF	485-00240	PB58549-046
9122292110	GFS35/25ZS/10CF	485-00300	PB58549-046
9122292110	GFS35/25ZSCF	485-00300	PB585NN-000
9122292124	GFS35/28LCF	485-00370	PB585NN-000
9122292124	GFS35/28LCFX	485-00370	PB58600-045
9122292131	GFS35/28LOMDCF	485-00400	PB58600-045
9122292131	GFS35/28LOMDCFU	485-00400	PB5860H-036
9122292154	GFS35/28ZLCF	485-00430	PB5860H-036
9122292154	GFS35/30S/10CF	485-00430	PB5860H-037
9122298611	GFS35/30S/10OMDCF	485-00440	PB5860H-037
9122298611	GFS35/30S71X	485-00440	PB5860K-012
9122298612	GFS35/30SCF	485-00500	PB5860K-012
9122298612	GFS35/30SCFX	485-00500	PB5860Y-000
9122298613	GFS35/30SOMDCF	485-00590	PB5860Y-000
9122298613	GFS35/30SOMDCFU	485-00590	PB58630-070
9122298614	GFS35/30SVITCF	485-00600	PB58630-070

9122298614	GFS35/30ZS/10CF	485-00600	PB58630-101
9122298615	GFS35/30ZSCF	485-00620	PB58630-101
9122298615	GFS35/35L/10CF	485-00620	PB58648-014
9122298616	GFS35/35L/10OMD71	485-00635	PB58648-014
9122298616	GFS35/35L/10OMDCF	485-00635	PB58649-000
9122298617	GFS35/35L71X	485-00650	PB58649-000
9122298617	GFS35/35LCF	485-00650	PB58649-001
9122298618	GFS35/35LCFX	485-00660	PB58649-001
9122298618	GFS35/35LOMDCF	485-00660	PB58649-002
9122298619	GFS35/35LOMDCFU	485-00680	PB58649-002
9122298619	GFS35/35ZL/10CF	485-00680	PB58649-003EX
9122352088	GFS35/35ZLCF	485-00700	PB58649-003EX
9122352088	GFS35/35ZLVITCF	485-00700	PB58649-008
9122352089	GFS35/38S/10CF	485-00710	PB58649-008
9122352089	GFS35/38S/10OMDCF	485-00710	PB58649-009
9122352090	GFS35/38SCF	485-00735	PB58649-009
9122352090	GFS35/38SCFX	485-00735	PB58649-013
9122352091	GFS35/38SOMDCF	485-00750	PB58649-013
9122352091	GFS35/38SOMDCFU	485-00750	PB58649-016
9122352093	GFS35/38ZS/10CF	485-00762	PB58649-016
9122352093	GFS35/38ZSCF	485-00762	PB58649-028
9122352100	GFS36/112GCF	485-00785	PB58649-028
9122352100	GFS36/112GCFM	485-00785	PB58649-033
9122380490	GFS36/112GSS	485-00800	PB58649-033
9122380490	GFS36/112NCFM	485-00800	PB58649-045
9122404701	GFS36/112NSS	485-00900	PB58649-045
9122404701	GFS36/114GCFM	485-00900	PB58649-046
9122421921	GFS36/114GSS	485-01000	PB58649-046
9122421921	GFS36/114NCFM	485-01000	PB58649-048
9122421922	GFS36/114NSS	485-01060	PB58649-048
9122421922	GFS36/35L71X	485-01060	PB58649-049
9122421924	GFS36/35LCF	485-01070	PB58649-049
9122421924	GFS36/35LCFX	485-01070	PB58649-055
9122421925	GFS36/35LOMDCF	485-01100	PB58649-055
9122421925	GFS36/35LOMDCFU	485-01100	PB58649-065
9122421926	GFS36/35ZLCF	485-01120	PB58649-065
9122421926	GFS36/38S71	485-01120	PB58649-N000
9122436081	GFS36/38SCF	485-01200	PB58649-N000
9122436081	GFS36/38SCFX	485-01200	PB58649-N001
9122518990	GFS36/38SOMD71	485-01220	PB58649-N001
9122518990	GFS36/38SOMDCF	485-01220	PB58649-N002
9122520051	GFS36/38SOMDCFU	485-01300	PB58649-N002
9122520051	GFS36/38ZSCF	485-01300	PB586NN-000
9122520054	GFS36/42L71X	485-01370	PB586NN-000
9122520054	GFS36/42LCF	485-01370	PB586NN-001
9122520055	GFS36/42LCFX	485-01400	PB586NN-001
9122520055	GFS36/42LOMD71	485-01400	PB586NN-002
9122600090	GFS36/42LOMDCF	485-01500	PB586NN-002
9122600090	GFS36/42LOMDCFU	485-01500	PB58730-053
9123100602	GFS36/42LVITCF	485-01600	PB58730-053
9123751202	GFS36/42LVITOMDCF	485-01600	PB58849-089
9123751202	GFS36/42ZLCF	485-01720	PB58849-089
9123860111	GFS38/112GCF	485-01720	PB58849-110

9123860111	GFS38/112GCFM	485-01850	PB58849-110
9123861499	GFS38/112GSS	485-01850	PB5890S-090
9123861499	GFS38/112NCFM	485-01920	PB5890S-090
9123950900	GFS38/112NSS	485-01920	PB5890S-096
9123950900	GFS38/2GCF	485-01925	PB5890S-096
9123956005	GFS38/2GCFM	485-01925	PB58949-008
9123956005	GFS38/2GSS	485-02000	PB58949-008
9123958812	GFS38/2NCFM	485-02000	PB58949-013
9123958824	GFS38/2NSS	485-02100	PB58949-013
9123971402	GFS62/12GCF	485-02100	PB58949-016
9123971402	GFS62/12GCFM	485-02120	PB58949-016
9123971404	GFS62/12GSS	485-02120	PB58949-032
9123971404	GFS62/12NCFM	485-02200	PB58949-032
9123971405	GFS62/12NSS	485-02200	PB58949-041
9123971405	GFS62/12S71X	485-02300	PB58949-041
9123971406	GFS62/12SCF	485-02300	PB58949-042
9123971406	GFS62/12SCFX	485-02413	PB58949-042
9123981801	GFS62/12SOMDCF	485-02413	PB58949-064
9123981801	GFS62/12SOMDCFU	485-02500	PB58949-064
9123981802	GFS62/12ZSCF	485-02500	PB58949-071
9123981802	GFS62/14S71X	485-02530	PB58949-071
9123981803	GFS62/14SCF	485-02530	PB58949-076
9123981803	GFS62/14SOMDCF	485-02600	PB58949-076
9123981804	GFS62/14SOMDCFU	485-02600	PB58949-078
9123981804	GFS62/14ZSCF	485-02620	PB58949-078
9123981805	GFS62/16S71X	485-02620	PB58949-093
9123981805	GFS62/16SCF	485-02700	PB58949-093
9123981807	GFS62/16SCFX	485-02700	PB58949-098
9123981807	GFS62/16SOMD71	485-02750	PB58949-098
9123985301	GFS62/16SOMDCF	485-02750	PB58949-102
9123985301	GFS62/16SOMDCFU	485-02950	PB58949-102
9123985302	GFS62/16SVITCF	485-02950	PB58949-105
9123985302	GFS62/16ZSCF	485-03000	PB58949-105
9123985303	GFS62/38GCFM	485-03000	PB58949-111
9123985303	GFS62/38NCFM	485-03350	PB58949-111
9123985304	GFS62/38NSS	485-03350	PB58949-113
9123985304	GFS63/12GCF	485-03700	PB58949-113
9124808100	GFS63/12GCFM	485-03700	PB58949-116
9124808100	GFS63/12GSS	485-04000	PB58949-116
9124808200	GFS63/12NCFM	485-04000	PB58949-117
9124808200	GFS63/12NSS	4850-40-00125-0000-000000	PB58949-117
9124808300	GFS63/16S71X	4850-40-00125-0000-000000	PB58949-118
9124808300	GFS63/16SCF	4850-40-00275-0000-000000	PB58949-118
9124808400	GFS63/16SCFX	4850-40-00275-0000-000000	PB58949-119
9124808400	GFS63/16SOMD71	4850-40-01000-0000-000000	PB58949-119
9124808600	GFS63/16SOMDCF	4850-40-01000-0000-000000	PB58949-123
9124808600	GFS63/16SOMDCFU	485-04050	PB58949-123
9124820500	GFS63/16ZSCF	485-04050	PB58949-126
9124820500	GFS63/20S71X	485-04350	PB58949-126
9124820600	GFS63/20SCF	485-04350	PB58949-127
9124820600	GFS63/20SCFX	485-05920	PB58949-127
9124820700	GFS63/20SOMD71	485-05920	PB58949-128
9124820700	GFS63/20SOMDCF	485-06570	PB58949-128

9124820800	GFS63/20SOMDCFU	485-06570	PB58949-129
9124820800	GFS63/20ZSCF	4851003D	PB58949-129
9124820900	GFS63/25S71X	4851003D	PB58949-130
9124820900	GFS63/25SCF	4851003N	PB58949-130
9124821000	GFS63/25SCFX	4851003N	PB58949-133
9124821000	GFS63/25SOMD71	485100C2	PB58949-133
9124821100	GFS63/25SOMDCF	485100C2	PB59230-022
9124821100	GFS63/25SOMDCFU	485100C7	PB59230-022
9124822100	GFS63/25ZS71	485100C7	PB59249-010
9124822100	GFS63/25ZSCF	485400C2	PB59249-010
9124822200	GFS63/30SCF	485400C2	PB59249-012
9124822200	GFS63/30SCFX	485400C4	PB59249-012
9125918500	GFS63/30SOMDCF	485400C4	PB59249-012
9125918500	GFS63/30SOMDCFU	486-00300	PB59249-012
9125963303	GFS63/30ZSCF	486-00300	PB5930K-010
9125963304	GFS63/34GCF	486-00360	PB5930K-010
9125996100	GFS63/34GCFM	486-00360	PB59349-002
9125996100	GFS63/34GSS	486-00600	PB59349-002
9125996310	GFS63/34NCFM	486-00600	PB59349-010
9125996310	GFS63/34NSS	486-00700	PB59349-010
9125998001	GFS63/38SOMDCF	486-00700	PB59349-011
9125998001	GFS64/1GCF	486-00730	PB59349-011
9125998003	GFS64/1GCFM	486-00730	PB59349-012
9125998003	GFS64/1GSS	486-00800	PB59349-012
9125998004	GFS64/1NCFM	486-00800	PB59349-018
9125998004	GFS64/1NSS	486-00825	PB59349-018
9125998005	GFS64/20S71X	486-00825	PB59349-020
9125998005	GFS64/20SCF	486-00850	PB59349-020
9125998006	GFS64/20SOMDCF	486-00850	PB59349-020
9125998006	GFS64/20SOMDCFU	486-01030	PB59349-020
9125998007	GFS64/20ZSCF	486-01030	PB59349-N010
9125998007	GFS64/25S71X	486-01070	PB59349-N010
9125998008	GFS64/25SCF	486-01070	PB59349-N012
9125998008	GFS64/25SCFX	486-01170	PB59349-N012
9125998010	GFS64/25SOMDCF	486-01170	PB59349-N020
9125998010	GFS64/25SOMDCFU	486-01200	PB59349-N020
9125998011	GFS64/25SVITCF	486-01200	PB593NN-010
9125998011	GFS64/25SVITOMDCF	486-01260	PB593NN-010
9126180901	GFS64/25ZSCF	486-01260	PB59549-000
9126181622	GFS64/30S71X	486-01300	PB59549-000
9126181633	GFS64/30SCF	486-01300	PB59649-000
9126181638	GFS64/30SCFX	486-01460	PB59649-000
9126181649	GFS64/30SOMD71	486-01460	PB59649-010
9126181653	GFS64/30SOMDCF	486-01500	PB59649-010
9126181654	GFS64/30SOMDCFU	486-01500	PB59649-021
9126181657	GFS64/30ZSCF	486-01520	PB59649-021
9126181684	GFS64/34GCF	486-01520	PB5980G-10000N-XX1
9126181692	GFS64/34GCFM	486-01700	PB5980G-10000N-XX1
9126181697	GFS64/34GSS	486-01700	PB5980G-10100N-XXX
9126181701	GFS64/34NCFM	486-01800	PB5980G-10100N-XXX
9126181703	GFS64/34NSS	486-01800	PB5980K-10000N-XXX
9126181743	GFS64/38SCFX	486-02000	PB5980K-10000N-XXX
9126181813	GFS64/38SOMDCF	486-02000	PB5980K-10100N-XXX

9126181822	GFS65/114GCF	486-02100	PB5980K-10100N-XXX
9126181861	GFS65/114GCFM	486-02100	PB59815-10100N-XXX
9126204504	GFS65/114GSS	486-02200	PB59815-10100N-XXX
9126204504	GFS65/114NCFM	486-02200	PB59846-10100N-XXX
9126323201	GFS65/114NSS	486-02300	PB59846-10100N-XXX
9126344301	GFS65/1GCF	486-02300	PB59849-06000N-XXX
9126344301	GFS65/1GCFM	486-02400	PB59849-06000N-XXX
9126344302	GFS65/1GSS	486-02400	PB59849-06000N-XXX
9126344302	GFS65/1NCFM	486-02500	PB59849-06000N-XXX
9126344309	GFS65/1NSS	486-02500	PB59849-06006N-XXX
9126344309	GFS65/25S/12CF	486-03040	PB59849-06006N-XXX
9126344321	GFS65/25S71X	486-03040	PB59849-06100N-XXX
9126344321	GFS65/25SCF	486-03350	PB59849-06100N-XXX
9126344322	GFS65/25SCFX	486-03350	PB59849-06100N-XXX
9126344322	GFS65/25SOMDCF	486-03700	PB59849-06100N-XXX
9126344329	GFS65/25SOMDCFU	486-03700	PB59849-10000N-XXX
9126344329	GFS65/25ZSCF	486-03740	PB59849-10000N-XXX
9126344341	GFS65/30S/12CF	486-03740	PB59849-10000N-XXX
9126344341	GFS65/30S/12OMDCF	486-04392	PB59849-10000N-XXX
9126344342	GFS65/30S71X	486-04392	PB59849-10000N-XXX
9126344342	GFS65/30SCF	486-04400	PB59849-10000N-XXX
9126344343	GFS65/30SCFU	486-04400	PB59849-10000N-XXX
9126344343	GFS65/30SCFX	486-04500	PB59849-10000N-XXX
9126344344	GFS65/30SOMD71	486-04500	PB59849-10000U-XXX
9126344344	GFS65/30SOMDCF	486-05092	PB59849-10000U-XXX
9126344345	GFS65/30SOMDCFU	486-05092	PB59849-10010N-XXX
9126344345	GFS65/30SOMDOZCF	4862650P	PB59849-10010N-XXX
9126344346	GFS65/30ZS/12CF	4862650P	PB59849-10010N-XXX
9126344346	GFS65/30ZSCF	486265A2	PB59849-10010N-XXX
9126344348	GFS65/38S/12CF	486265A2	PB59849-10100N-XXX
9126344348	GFS65/38S/12OMDCF	486265A7	PB59849-10100N-XXX
9126344349	GFS65/38S71X	486265A7	PB59849-10100N-XXX
9126344349	GFS65/38SCF	486265C1	PB59849-10100N-XXX
9126344350	GFS65/38SCFX	486265C1	PB59849-10100U-XXX
9126344350	GFS65/38SOMD71	486265C2	PB59849-10100U-XXX
9126344361	GFS65/38SOMDCF	486265C2	PB59849-10110N-XXX
9126344361	GFS65/38SOMDCFU	486265F4	PB59849-10110N-XXX
9126344362	GFS65/38SVITCF	486265F4	PB59849-10200N-XXX
9126344362	GFS65/38ZS/12CF	486265S2	PB59849-10200N-XXX
9126344363	GFS65/38ZSCF	486265S2	PB59849-10200N-XXX
9126344363	GFS66/112GCF	487-00200	PB59849-10200N-XXX
9126344381	GFS66/112GCFM	487-00200	PB59849-12000N-XXX
9126344381	GFS66/112GSS	487-00250	PB59849-12000N-XXX
9126344382	GFS66/112NCFM	487-00250	PB59849-12315N-XXX
9126344382	GFS66/112NSS	487-00400	PB59849-12315N-XXX
9126344391	GFS66/114GCFM	487-00400	PB59849-69010N-XXX
9126344391	GFS66/114GSS	487-00450	PB59849-69010N-XXX
9126344392	GFS66/114NCFM	487-00450	PB59949-06100N-XXX
9126344392	GFS66/114NSS	487-00500	PB59949-06100N-XXX
9126386055	GFS66/30S71X	487-00500	PB59949-08000N-XXX
9126454811	GFS66/30SCF	487-00510	PB59949-08000N-XXX
9126454811	GFS66/30SCFX	487-00510	PB59949-10000N-XXX
9126454812	GFS66/30SOMD71	487-00515	PB59949-10000N-XXX

9126454812	GFS66/30SOMDCF	487-00515	PB59949-10010N-XX6
9126454815	GFS66/30SOMDCFU	487-00550	PB59949-10010N-XX6
9126454815	GFS66/30ZSCF	487-00550	PB59949-10010N-XXX
9126454817	GFS66/38S71X	487-00580	PB59949-10010N-XXX
9126454817	GFS66/38SCF	487-00580	PB59949-10100N-XXX
9126454818	GFS66/38SCFX	487-00600	PB59949-10100N-XXX
9126454818	GFS66/38SOMD71	487-00600	PB59949-10210N-XXX
9126454819	GFS66/38SOMDCF	487-00650	PB59949-10210N-XXX
9126454819	GFS66/38SOMDCFU	487-00650	PB60149-02005N-XXX
9126461304	GFS66/38ZSCF	487-00675	PB60149-02005N-XXX
9126461304	GFS68/112GCF	487-00675	PB60149-08010N-XX4
9126461305	GFS68/112GCFM	487-00700	PB60149-08010N-XX4
9126461305	GFS68/112GSS	487-00700	PB60149-08010N-XX4
9126510051	GFS68/112NCFM	487-00750	PB60149-08010N-XX4
9126510051	GFS68/112NSS	487-00750	PB60149-10000N-XXX
9126510052	GFS68/2GCFM	487-00765	PB60149-10000N-XXX
9126510052	GFS68/2GSS	487-00765	PB60149-10000N-XXX
9126510053	GFS68/2NCFM	487-00800	PB60149-10000N-XXX
9126510053	GFS68/2NSS	487-00800	PB60149-10000N-XXX
9126725405	GFSG32/12GSS	487-00805	PB60149-10000N-XXX
9126725405	GFSG32/12NSS	487-00805	PB60149-10000U-XXX
9126725406	GFSG32/38GSS	487-00850	PB60149-10000U-XXX
9126725406	GFSG32/38NSS	487-00850	PB60149-10010N-XXX
9126725407	GFSG33/12GSS	487-00900	PB60149-10010N-XXX
9126725407	GFSG33/12NSS	487-00900	PB60149-10100N-XXX
9126900010	GFSG33/34GSS	487-00915	PB60149-10100N-XXX
9126900010	GFSG33/34NSS	487-00915	PB60149-10110N-XXX
9126900011	GFSG34/1GCF	487-00925	PB60149-10110N-XXX
9126900011	GFSG34/1GSS	487-00925	PB60149-10200N-XXX
9126900014	GFSG34/1NSS	487-01000	PB60149-10200N-XXX
9126900014	GFSG34/34GSS	487-01000	PB60149-10210N-XXX
9126900017	GFSG34/34NSS	487-01020	PB60149-10210N-XXX
9126900017	GFSG35/114GSS	487-01020	PB60205-10000N-XX3
9126900018	GFSG35/114NSS	487-01050	PB60205-10000N-XX3
9126900018	GFSG35/1GSS	487-01050	PB6020G-10000N-XXX
9126900195	GFSG35/1NSS	487-01135	PB6020G-10000N-XXX
9126900195	GFSG36/112GCF	487-01135	PB60249-001
9126900196	GFSG36/112GSS	487-01150	PB60249-001
9126900196	GFSG36/112NSS	487-01150	PB60249-001
9126900302	GFSG36/114GSS	487-01300	PB60249-001
9126900302	GFSG36/114NSS	487-01300	PB60249-04000N-XXX
9126900303	GFSG38/112GCF	487-01305	PB60249-04000N-XXX
9126900303	GFSG38/112GSS	487-01305	PB60249-05010N-XXX
9126900440	GFSG38/112NSS	487-01380	PB60249-05010N-XXX
9126900440	GFSG38/2GCF	487-01380	PB60249-05110N-XXX
9126900446	GFSG38/2GSS	487-01400	PB60249-05110N-XXX
9126900446	GFSG38/2NCF	487-01400	PB60249-06000N-XXX
9126900447	GFSG38/2NSS	487-01500	PB60249-06000N-XXX
9126900447	GFSG62/12GSS	487-01500	PB60249-06006N-XXX
9126900448	GFSG62/12NSS	487-01515	PB60249-06006N-XXX
9126900448	GFSG62/38NSS	487-01515	PB60249-06100N-XXX
9127113301	GFSG63/12GSS	487-01730	PB60249-06100N-XXX
9127113301	GFSG63/12NSS	487-01730	PB60249-06100N-XXX

9127113302	GFSG63/34GSS	487-01920	PB60249-06100N-XXX
9127113302	GFSG63/34NSS	487-01920	PB60249-08010N-XX4
9127113303	GFSG64/1GCF	487-03000	PB60249-08010N-XX4
9127113303	GFSG64/1GSS	487-03000	PB60249-10000N-XX2
9127113350	GFSG64/1NSS	488-00250	PB60249-10000N-XX2
9127113350	GFSG64/34GSS	488-00250	PB60249-10000N-XXX
9127289103	GFSG64/34NSS	488-00330	PB60249-10000N-XXX
9127289103	GFSG65/114GSS	488-00330	PB60249-10000N-XXX
9127289104	GFSG65/114NSS	488-00375	PB60249-10000N-XXX
9127289104	GFSG65/1GSS	488-00375	PB60249-10000U-XXX
9127289107	GFSG65/1NSS	488-00450	PB60249-10000U-XXX
9127289107	GFSG66/112GSS	488-00450	PB60249-10010N-XXX
9127289112	GFSG66/112NSS	488-00465	PB60249-10010N-XXX
9127289112	GFSG66/114GCF	488-00465	PB60249-10010N-XXX
9127294401	GFSG66/114GSS	488-00550	PB60249-10010N-XXX
9127294401	GFSG66/114NSS	488-00550	PB60249-10010N-XXX
9127294402	GFSG68/112GCF	488-00700	PB60249-10010N-XXX
9127294402	GFSG68/112GSS	488-00700	PB60249-10100N-XXX
9127294403	GFSG68/112NSS	488-00730	PB60249-10100N-XXX
9127294403	GFSG68/2GCF	488-00730	PB60249-10100N-XXX
9127319902	GFSG68/2GSS	488-00800	PB60249-10100N-XXX
9127319903	GFSG68/2NSS	488-00800	PB60249-10100U-XXX
9127319904	GG20025B01	488-00850	PB60249-10100U-XXX
9127319954	GG20025B01	488-00850	PB60249-10110N-XXX
9127320014	GG2N035R0601	488-01100	PB60249-10110N-XXX
9127368635	GH2BZ 10-1/4-SS	488-01100	PB60249-10200N-XXX
9127368635	GH2BZ 12-1/2-SS	488-01750	PB60249-10200N-XXX
9127368636	GH2BZ 12-3/8-SS	488-01750	PB60249-10200N-XXX
9127368636	GH2BZ 6-1/4-SS	488-01800	PB60249-10200N-XXX
9127368641	GH2BZ 6-1/8-SS	488-01800	PB60249-10210N-XXX
9127368641	GH2BZ 8-1/8-SS	488-01840	PB60249-10210N-XXX
9127385101	GHP04PRO	488-01840	PB60349-000
9127385101	GHP04X	488-01850	PB60349-000
9127385112	GHP05PRO	488-01850	PB6050G-050
9127385112	GHP06PRO	488-02300	PB6050G-050
9127385121	GHP06X	488-02300	PB6050G-070
9127385121	GHP08PRO	488-02450	PB6050G-070
9127385122	GHP08X	488-02450	PB6050G-071
9127385122	GHP10PRO	488-03870	PB6050G-071
9127385123	GHP10X	488-03870	PB60516-072
9127385123	GHP12PRO	488-35001-0	PB60516-072
9127393504	GHP12X	488-35024-0	PB60549-10000N-XXX
9127393504	GHP14PRO	488-35050-0	PB60549-10000N-XXX
9127394541	GHP14X	488553P1	PB6060G-06100N-XXX
9127394541	GHP15PRO	488553P1	PB6060G-06100N-XXX
9127399628	GHP15X	48865001N7	PB6060G-070
9127399628	GHP16X	48865001N7	PB6060G-070
9128154206	GHP18PRO	48865002N7	PB6060G-071
9128177212	GHP18X	48865002N7	PB6060G-071
9128177212	GHP20PRO	48866001N7	PB60616-072
9128177222	GHP20X	48866001N7	PB60616-072
9128177222	GHP22PRO	48867001N7	PB6061S-020
9128328050	GHP22X	48867001N7	PB6061S-020

9128328052	GHP25X	488947P1	PB60649-000
9128674100	GHP28X	488947P1	PB60649-000
9128674100	GHP30X	4889800A	PB60649-050
9128741801	GHP35X	4889800A	PB60649-050
9128741802	GHP38X	4889803D	PB60649-051
9128741803	GHP42X	4889803D	PB60649-051
9128741804	GI05/04	4889806J	PB60649-076
9128741805	GI10/06	4889806J	PB60649-076
9128741806	GI10/06N	4889807J	PB60649-077
9128741808	GI10/08	4889807J	PB60649-077
9128741809	GI10/08N	488980A2	PB60649-10000N-XXX
9128741810	GI10/09	488980A2	PB60649-10000N-XXX
9128741811	GI13/06	488980A4	PB60649-701
9128741812	GI13/06N	488980A4	PB60649-701
9128741813	GI13/08	488980B2	PB60649-702
9128741814	GI13/08N	488980B2	PB60649-702
9128741815	GI13/09	488980C1	PB6091S-000
9128741816	GI13/09N	488980C1	PB6091S-000
9128741821	GI13/13	488980C2	PB6160C-N001
9128741842	GI13/13N	488980C2	PB6160C-N001
9128741844	GI1414	488980C4	PB6160G-016
9128789707	GI1486	488980C4	PB6160G-016
9128798705	GI17/06	4890 10 10	PB6160G-021
9128798708	GI17/06N	4890 13 13	PB6160G-021
9128798759	GI17/08	4890 17 17	PB6160G-070
9128960900	GI17/08N	4890 21 21	PB6160G-070
9128960900	GI17/09	4890 27 27	PB61616-000
9141100000	GI17/09N	4890 34 34	PB61616-000
9141100000	GI17/13	4891 10 10	PB61616-002
9141100100	GI17/13N	4891 13 13	PB61616-002
9141100100	GI21/06	4891 17 17	PB61647-000
9141100200	GI21/06N	4891 21 21	PB61647-000
9141100200	GI21/08	4891 27 27	PB61649-000EX
9141100300	GI21/08N	4891 34 34	PB61649-000EX
9141100300	GI21/09	4892 10 10	PB61649-001
9141121603	GI21/09N	4892 13 13	PB61649-001
9141121603	GI21/13	4892 17 17	PB61649-002EX
9141121605	GI21/13N	4892 17 17 30	PB61649-002EX
9141121605	GIHNK-70-LO	4892 21 21	PB61649-016EX
9141121607	GIHR-35DO	4892 27 27	PB61649-016EX
9141121607	GM0251N	4892 34 34	PB61649-070
9141121608	GM06L71X	4895 11 11	PB61649-070
9141121608	GM06LCFX	4895 14 14	PB61649-070EX
9141150200	GM08L71X	4895 18 18	PB61649-070EX
9141150200	GM08LCFX	4895 22 22	PB6170C-N001
9141151100	GM08LMSX	489XQAHX-A3XD	PB6170C-N001
9141151100	GM10L71X	48AP1CF	PB6170G-016
9141151200	GM10LCFX	48AP2CF	PB6170G-016
9141151200	GM10LMSX	4-8CMTXSS	PB6170G-021
9141151300	GM12L71X	48CPM1CF	PB6170G-021
9141151300	GM12LCFX	48CPM1SS	PB6170U-N021
9141151400	GM12LH30CFX	4-8F42EDMLOS	PB6170U-N021
9141151400	GM12LMSX	4-8F42EDMLOSS	PB6170W-000

9141151500	GM12S71X	4-8F42EDMXS	PB6170W-000
9141151500	GM12SCFX	4-8F42EDMXSBP	PB61716-000
9141151600	GM12SMSX	4-8F42EDMXSS	PB61716-000
9141151600	GM15L71X	4-8F4OMXS	PB61719-093
9141152500	GM15LCFX	4-8F6MK4S	PB61719-093
9141152500	GM15LMSX	4-8FMTXSS	PB6171E-001
9301050901	GM15LSW36CFX	4-8G4MXSMO	PB6171E-001
9301050901	GM16S71X	4-8G4MXSSMO	PB6171E-002
9301050902	GM16SCFVOLX	4-8GC GBZ-SS	PB6171E-002
9301050902	GM16SCFX	4-8GMTXSS	PB6171E-022
9301050903	GM16SMSX	4-8K FBZ-SS	PB6171E-022
9301050903	GM18L71X	4-8K GBZ-SS	PB6171L-300
9301050904	GM18LCFX	48KBAW13DPX	PB6171L-300
9301050904	GM22L71X	48KBAW13DPXB	PB6171L-330
9301054261	GM22LCFX	48KBAW13DPXG	PB6171L-330
9301054261	GM22LMSX	48KBAW13DPXR	PB61747-000
9301054262	GM28L71X	48KBAW13DPXY	PB61747-000
9301054262	GM28LCFX	48KBAW13FEX	PB61749-003
9301054264	GM28LMSX	48KBAW13FVP	PB61749-003
9301054264	GM30S71X	48KBAW13FVPB	PB61749-005
9301054266	GM30SCFX	48KBAW13FVX	PB61749-005
9301054266	GM35L71X	48KBAW13FVXB	PB61749-016EX
9301054268	GM35LCFX	48KBAW13FVXG	PB61749-016EX
9301054268	GM42L71X	48KBAW13FVXR	PB61749-050
9301054301	GM42LCFX	48KBAW13FVXY	PB61749-050
9301054301	GMA06SM12X1.571X	48KBAW17DEX	PB61800-000
9301054302	GMA08SM12X1.571X	48KBAW17DPX	PB61800-000
9301054302	GMA1/06SCF	48KBAW17DPXB	PB6180C-N000
9301054304	GMA1/08LCF	48KBAW17DPXG	PB6180C-N000
9301054304	GMA1/08LOMDCF	48KBAW17DPXR	PB6180G-000
9301054305	GMA1/10SCF	48KBAW17DPXY	PB6180G-000
9301054305	GMA1/12LCF	48KBAW17FEP	PB6180G-023
9301054306	GMA1/12SCF	48KBAW17FVP	PB6180G-023
9301054306	GMA1/12SOMDCF	48KBAW17FVPB	PB6180G-025
9301054311	GMA1/15LOMDCF	48KBAW17FVPR	PB6180G-025
9301054311	GMA1/16SCF	48KBAW17FVX	PB6180G-029
9301054312	GMA1/20SOMDCF	48KBAW17FVXB	PB6180G-029
9301054312	GMA1/22LCF	48KBAW17FVXG	PB6180G-070
9301054313	GMA12SM12X1.571X	48KBAW17FVXR	PB6180G-070
9301054313	GMA12SM12X1.5CNX	48KBAW17FVXY	PB61816-022
9301054314	GMA16SM12X1.571X	48KBAW21DEX	PB61816-022
9301054314	GMA20SM12X1.571X	48KBAW21DPX	PB61847-000
9301054316	GMA25SM12X1.571X	48KBAW21DPXB	PB61847-000
9301054316	GMA3/06L71	48KBAW21DPXG	PB61849-000EX
9301054317	GMA3/06LCF	48KBAW21DPXR	PB61849-000EX
9301054317	GMA3/06LOMD71	48KBAW21DPXY	PB61849-006EX
9301054322	GMA3/06LOMDCF	48KBAW21FEX	PB61849-006EX
9301054322	GMA3/06S71	48KBAW21FVP	PB61849-021
9301054324	GMA3/06SCF	48KBAW21FVX	PB61849-021
9301054324	GMA3/06SOMD71	48KBAW21FVXB	PB61849-025EX
9301054371	GMA3/06SOMDCF	48KBAW21FVXG	PB61849-025EX
9301054371	GMA3/06ZLCF	48KBAW21FVXR	PB61849-033
9301054372	GMA3/06ZLVITSSACF	48KBAW21FVXY	PB61849-033

9301054372	GMA3/06ZSCF	48KBIW13DEX	PB6190C-N000
9301054373	GMA3/08L71	48KBIW13DPX	PB6190C-N000
9301054373	GMA3/08LCF	48KBIW13DPXB	PB6190G-000
9301054374	GMA3/08LOMD71	48KBIW13DPXG	PB6190G-000
9301054374	GMA3/08LOMDCF	48KBIW13DPXR	PB6190G-023
9301054375	GMA3/08LOMDVITCF	48KBIW13DPXY	PB6190G-023
9301054375	GMA3/08S71	48KBIW13FVP	PB6190G-025
9301054376	GMA3/08SCF	48KBIW13FVX	PB6190G-025
9301054376	GMA3/08SOMD71	48KBIW13FVXB	PB6190G-070
9301054377	GMA3/08SOMDCF	48KBIW13FVXG	PB6190G-070
9301054377	GMA3/08ZL71	48KBIW13FVXR	PB6190K-027
9301054392	GMA3/08ZLCF	48KBIW13FVXY	PB6190K-027
9301054392	GMA3/08ZS71	48KBIW17DEX	PB6190U-000
9301054394	GMA3/08ZSCF	48KBIW17DPX	PB6190U-000
9301054394	GMA3/10L71	48KBIW17DPXB	PB6190W-000
9301054395	GMA3/10LCF	48KBIW17DPXG	PB6190W-000
9301054395	GMA3/10LOMD71	48KBIW17DPXR	PB61911-044
9505005090	GMA3/10LOMDCF	48KBIW17DPXY	PB61911-044
9505005091	GMA3/10S71	48KBIW17DVX	PB61911-044
9505005104	GMA3/10SCF	48KBIW17FEX	PB61911-044
9505005115	GMA3/10SOMD71	48KBIW17FVP	PB61919-N023
9505010091	GMA3/10SOMDCF	48KBIW17FVPB	PB61919-N023
9505010094	GMA3/10ZLCF	48KBIW17FVPG	PB6191E-000
9505010095	GMA3/10ZS71	48KBIW17FVPR	PB6191E-000
9505010097	GMA3/10ZSCF	48KBIW17FVPY	PB6191W-025
9505010098	GMA3/12L71	48KBIW17FVX	PB6191W-025
9505010106	GMA3/12LCF	48KBIW17FVXB	PB61947-000
9505010109	GMA3/12LOMD71	48KBIW17FVXG	PB61947-000
9505010111	GMA3/12LOMDCF	48KBIW17FVXR	PB61949-000EX
9505010133	GMA3/12LOMDVITCF	48KBIW17FVXS	PB61949-000EX
9505015005	GMA3/12S71	48KBIW17FVXY	PB61949-008
9505015007	GMA3/12SCF	48KBIW21DPX	PB61949-008
9505015011	GMA3/12SOMD71	48KBIW21DPXB	PB61949-021
9505015014	GMA3/12SOMDCF	48KBIW21DPXG	PB61949-021
9510008001	GMA3/12ZL71	48KBIW21DPXR	PB61949-023
9519000004	GMA3/12ZLCF	48KBIW21FEX	PB61949-023
9519000007	GMA3/12ZS71	48KBIW21FVP	PB61949-032
9721900005	GMA3/12ZSCF	48KBIW21FVPB	PB61949-032
9721900005	GMA3/12ZSVITCF	48KBIW21FVPG	PB61949-400
9723004754	GMA3/14SCF	48KBIW21FVPR	PB61949-400
9723004754	GMA3/14SOMDCF	48KBIW21FVPY	PB6200C-N000
9723004756	GMA3/14ZSCF	48KBIW21FVX	PB6200C-N000
9723004756	GMA3/15L71	48KBIW21FVXB	PB6200G-000
9723015148	GMA3/15LCF	48KBIW21FVXG	PB6200G-000
9723015148	GMA3/15LOMD71	48KBIW21FVXR	PB62016-000
011060200023	GMA3/15LOMDCF	48KBKP08FVP	PB62016-000
011060200028	GMA3/15LOMDVITCF	48KBKP08FVX	PB62019-022
011060200049	GMA3/15ZLCF	48KBKP12FVP	PB62019-022
011080200001	GMA3/16S71	48KBKP12FVPS	PB62047-000
011080200004	GMA3/16SCF	48KBKP12FVX	PB62047-000
011080200007	GMA3/16SOMD71	48KBKP12FVXS	PB62049-002EX
011080200009	GMA3/16SOMDCF	48KBTF04FVP	PB62049-002EX
012010100013	GMA3/16SVITCF	48KBTF06DEX	PB62049-003

012010100014	GMA3/16ZS71	48KBTF06DPX	PB62049-003
012010100016	GMA3/16ZSCF	48KBTF06DPXB	PB62049-015
012010100025	GMA3/18L71	48KBTF06DPXG	PB62049-015
012010100027	GMA3/18LCF	48KBTF06DPXR	PB6210C-N000
012010100028	GMA3/18LOMD71	48KBTF06DPXY	PB6210C-N000
012010100059	GMA3/18LOMDCF	48KBTF06FEP	PB6210G-000
012010100061	GMA3/18LOMDVITCF	48KBTF06FEX	PB6210G-000
012010100069	GMA3/18ZL71	48KBTF06FVP	PB62116-000
012010100072	GMA3/18ZLCF	48KBTF06FVPR	PB62116-000
012010100073	GMA3/20S71	48KBTF06FVX	PB6211E-000
012010100074	GMA3/20SCF	48KBTF06FVXB	PB6211E-000
012010100101	GMA3/20SOMD71	48KBTF06FVXR	PB62130-046
012010100114	GMA3/20SOMDCF	48KBTF09DEX	PB62130-046
012010100128	GMA3/20SVITOMDCF	48KBTF09DPX	PB62131-021
012010100137	GMA3/20ZS71	48KBTF09DPXB	PB62131-021
012010100173	GMA3/20ZSCF	48KBTF09DPXG	PB62147-000
012010100174	GMA3/22L71	48KBTF09DPXR	PB62147-000
012010100175	GMA3/22LCF	48KBTF09DPXY	PB62148-000
012010100205	GMA3/22LOMD71	48KBTF09DVX	PB62148-000
012010100226	GMA3/22LOMDCF	48KBTF09FEP	PB62148-010
012010100251	GMA3/22LOMDVITCF	48KBTF09FEX	PB62148-010
012010100264	GMA3/22ZLCF	48KBTF09FEXS	PB62149-002
012010100276	GMA3/25S71	48KBTF09FVP	PB62149-002
012010100283	GMA3/25SCF	48KBTF09FVPR	PB62149-003
012010100285	GMA3/25SOMD71	48KBTF09FVX	PB62149-003
012010100286	GMA3/25SOMDCF	48KBTF09FVXB	PB6220C-N001
012010100287	GMA3/25ZSCF	48KBTF09FVXG	PB6220C-N001
012010100311	GMA3/25ZSVITCF	48KBTF09FVXR	PB6220G-012
012010100317	GMA3/28L71	48KBTF09FVXY	PB6220G-012
012010100343	GMA3/28LCF	48KBTF13DEX	PB6220G-016
012010100349	GMA3/28LOMD71	48KBTF13DPX	PB6220G-016
012010100351	GMA3/28LOMDCF	48KBTF13DPXB	PB62216-023
012010100352	GMA3/28LVITCF	48KBTF13DPXG	PB62216-023
012010100355	GMA3/28ZLCF	48KBTF13DPXR	PB62216-025
012010100358	GMA3/30S71	48KBTF13DPXY	PB62216-025
012010200001	GMA3/30SCF	48KBTF13FEX	PB62219-N001
012010200006	GMA3/30SOMD71	48KBTF13FVP	PB62219-N001
012010200007	GMA3/30SOMDCF	48KBTF13FVX	PB62247-000
012010200011	GMA3/30ZSCF	48KBTF13FVXB	PB62247-000
012011800001	GMA3/35L71	48KBTF13FVXG	PB62247-000EX
012011800010	GMA3/35LCF	48KBTF13FVXR	PB62247-000EX
012011800011	GMA3/35LOMD71	48KBTF13FVXY	PB62249-021
012011800018	GMA3/35LOMDCF	48KFAW13DPX	PB62249-021
012011800019	GMA3/35ZLCF	48KFAW21DPX	PB62249-042
012030100017	GMA3/38S71	48KFAW21FVX	PB62249-042
012030100020	GMA3/38SCF	48KFIW17DPX	PB62249-045EX
012030100022	GMA3/38SOMD71	48KFIW17DPXB	PB62249-045EX
012030100024	GMA3/38SOMDCF	48KFIW17DPXG	PB62249-046
012030100028	GMA3/38ZSCF	48KFIW17DPXR	PB62249-046
012030100033	GMA3/42LCF	48KFIW17DPXY	PB62249-091
012030100040	GMA3/42LOMD71	48KFIW17DVX	PB62249-091
012030100041	GMA3/42LOMDCF	48KFIW17FVX	PB6230C-N001
012030100043	GMA3/42LOMDVITCF	48KFIW17FVXB	PB6230C-N001

012030100047	GMA3/42ZLCF	48KFIW17FVXG	PB6230G-012
012030100049	GMA30SM12X1.571X	48KFIW17FVXR	PB6230G-012
012030100053	GMA4/10L	48KFIW17FVXY	PB6230G-016
012030100063	GMA4/10SOMD71	48KFTF04FVP	PB6230G-016
012030100360	GMA4/12S71	48KFTF06DEX	PB6230K-023
012031800004	GMA4/12SOMD71	48KFTF06DPX	PB6230K-023
012031800005	GMA4/14SOMD71	48KFTF06FVP	PB6230S-011
012031800013	GMA4/16SOMD71	48KFTF09DEX	PB6230S-011
012031800031	GMA4/20SOMD71	48KFTF09DPX	PB6230S-090
012061900003	GOTLS-400	48KFTF09FEP	PB6230S-090
012061900005	GP0251L1N	48KFTF09FVP	PB6230T-001
012061900006	GP0251LN	48KFTF09FVX	PB6230T-001
012061900007	GP02531N	48KFTF13DEX	PB6230W-000
012061900008	GP0253L	4-8L LOHU86-S	PB6230W-000
012061900013	GP0253LN	48PMQ1CF	PB62316-023
012061900014	GP04531	4-8R FBZ-SS	PB62316-023
012061900015	GP04531N	4-8R MHN-SS	PB6231A-089
012070400002	GP0453N	4-8S LOHU86-S	PB6231A-089
012080400002	GPA-95-011	48SBAW13DEX	PB6231C-402
012080400005	GPA-95-011	48SBAW13DPX	PB6231C-402
012080400012	GPA-95-012	48SBAW13DPXB	PB6231E-001
012080400014	GPA-95-012	48SBAW13DPXG	PB6231E-001
012081900001	GPA-95-016	48SBAW13DPXR	PB6231E-011
012081900023	GPA-95-016	48SBAW13DPXY	PB6231E-011
012081900027	GPA-95-032	48SBAW13DVX	PB6231W-012
012081900034	GPA-95-032	48SBAW13FVP	PB6231W-012
012081900036	GPA-95-037	48SBAW13FVPB	PB62347-000
012081900037	GPA-95-037	48SBAW13FVX	PB62347-000
012081900038	GPA-95-039	48SBAW13FVXB	PB62349-021
012081900039	GPA-95-039	48SBAW13FVXR	PB62349-021
012081900040	GPA-95-040	48SBAW17DEX	PB62349-029
012090300002	GPA-95-040	48SBAW17DPX	PB62349-029
012090300005	GPA-95-043	48SBAW17DPXB	PB62349-031
012090300031	GPA-95-043	48SBAW17DPXG	PB62349-031
012090300032	GPA-95-051	48SBAW17DPXR	PB62349-035
012090300034	GPA-95-051	48SBAW17FEP	PB62349-035
012090300123	GPA-95-099	48SBAW17FEX	PB62349-045
012090300142	GPA-95-099	48SBAW17FVP	PB62349-045
012090300147	GPA-95-100	48SBAW17FVPB	PB62349-N000EX
012091900003	GPA-95-100	48SBAW17FVPG	PB62349-N000EX
012091900007	GPA-95-101	48SBAW17FVPR	PB6250G-010
012091900008	GPA-95-101	48SBAW17FVPY	PB6250G-010
012091900009	GPA-95-223	48SBAW17FVX	PB6260K-010
012091900011	GPA-95-223	48SBAW17FVXB	PB6260K-010
012091900012	GPA-95-226	48SBAW17FVXG	PB6260U-012
012091900013	GPA-95-226	48SBAW17FVXR	PB6260U-012
012091900016	GPA-95-228	48SBAW17FVXY	PB62649-N060
012091900019	GPA-95-228	48SBAW21DEX	PB62649-N060
012091900020	GPA-95-292	48SBAW21DPX	PB6290K-000
012091900021	GPA-95-292	48SBAW21DPXB	PB6290K-000
012091900023	GPA-95-918	48SBAW21DPXG	PB62946-000
012091900024	GPA-95-918	48SBAW21DPXR	PB62946-000
012091900026	GPA-95-919	48SBAW21DPXY	PB62949-002

012091900027	GPA-95-919	48SBAW21FVP	PB62949-002
012091900029	GPA-95-946	48SBAW21FVX	PB6300G-000
013011400001	GPA-95-946	48SBAW21FVXB	PB6300G-000
013011400003	GPA-95-956	48SBAW21FVXG	PB6300G-001
013011400007	GPA-95-956	48SBAW21FVXR	PB6300G-001
013011400010	GPA-95-968	48SBIW13DPX	PB63049-000EX
013081400002	GPA-95-968	48SBIW13DPXB	PB63049-000EX
013081400011	GPA-95-969	48SBIW13DPXG	PB63049-004EX
013081400063	GPA-95-969	48SBIW13DPXR	PB63049-004EX
013081400064	GPA-96-602	48SBIW13DPXY	PB6310G-000
013091400005	GPA-96-602	48SBIW13DVX	PB6310G-000
013091400029	GPA-96-603-51	48SBIW13FVP	PB6310G-001
013091400031	GPA-96-603-51	48SBIW13FVPY	PB6310G-001
013091400049	GPA-96-604	48SBIW13FVX	PB63149-000EX
014010500010	GPA-96-604	48SBIW17DPX	PB63149-000EX
014010500013	GPA-96-605	48SBIW17DPXB	PB63149-002
014010500024	GPA-96-605	48SBIW17DPXG	PB63149-002
014010500054	GPA-96-605-51	48SBIW17DPXR	PB63149-013
014010500072	GPA-96-605-51	48SBIW17DPXY	PB63149-013
014030100073	GPA-96-606	48SBIW17DVX	PB6320G-000
014030100076	GPA-96-606	48SBIW17FEX	PB6320G-000
014030100078	GPA-96-607	48SBIW17FVP	PB63247-000
014030500034	GPA-96-607	48SBIW17FVPB	PB63247-000
014030500042	GPA-96-608	48SBIW17FVPR	PB6330G-000
014030500071	GPA-96-608	48SBIW17FVX	PB6330G-000
014060500036	GPA-96-609	48SBIW17FVXB	PB63346-000
014070500002	GPA-96-609	48SBIW17FVXG	PB63346-000
014070500017	GPA-96-616	48SBIW17FVXR	PB63347-000
014080500021	GPA-96-616	48SBIW17FVXS	PB63347-000
014081900004	GPA-96-620	48SBIW17FVXY	PB63349-N001
014090100006	GPA-96-620	48SBIW21DPX	PB63349-N001
014090500007	GPA-96-621	48SBIW21DPXB	PB63447-000
014090500017	GPA-96-621	48SBIW21DPXG	PB63447-000
014091900001	GPA-96-622	48SBIW21DPXR	PB63449-004
014100500012	GPA-96-622	48SBIW21DPXY	PB63449-004
014100500039	GPA-96-623	48SBIW21DVX	PB63516-000
014120500012	GPA-96-623	48SBIW21FVP	PB63516-000
015010200002	GPA-96-628	48SBIW21FVPB	PB63547-000
015010200015	GPA-96-628	48SBIW21FVPG	PB63547-000
015010200016	GPA-96-629	48SBIW21FVPR	PB63549-000
015010200017	GPA-96-629	48SBIW21FVPY	PB63549-000
015010200023	GPA-96-737	48SBIW21FVX	PB63549-000
015010200061	GPA-96-737	48SBIW21FVXB	PB63549-000
015011400002	GPA-96-738	48SBIW21FVXR	PB63616-000
015080500001	GPA-96-738	48SBKP08FVP	PB63616-000
015080500009	GPA-97-010	48SBKP08FVX	PB6361V-010EX
015080500010	GPA-97-010	48SBKP12FVP	PB6361V-010EX
015080500028	GPA-97-026	48SBKP12FVPS	PB63647-000
015090400045	GPA-97-026	48SBKP12FVX	PB63647-000
015090400046	GPA-97-067	48SBKP12FVXS	PB63649-004
015090400053	GPA-97-067	48SBTF06DPX	PB63649-004
015100500008	GPA-97-087	48SBTF06DPXB	PB63649-010EX
017010100003	GPA-97-087	48SBTF06DPXG	PB63649-010EX

017010100022	GR06/04LL71	48SBTF06DPXR	PB63716-000
017030100003	GR06/04LLCF	48SBTF06FEX	PB63716-000
017030100013	GR06/04LLCFX	48SBTF06FVP	PB63716-005
017030100014	GR06/04LLMS	48SBTF06FVX	PB63716-005
017030100015	GR06/04ZLLCF	48SBTF06FVXB	PB63746-021
017060300010	GR06L/04LLSA131BOFF71	48SBTF09DEX	PB63746-021
017060300021	GR08/04LL71	48SBTF09DPX	PB63747-000
017060300023	GR08/04LL71X	48SBTF09DPXB	PB63747-000
017060300028	GR08/04LLCF	48SBTF09DPXG	PB63749-000
017060300029	GR08/04LLCFX	48SBTF09DPXR	PB63749-000
017060300030	GR08/06L71	48SBTF09DPXY	PB63749-010
017060300049	GR08/06L71X	48SBTF09FEX	PB63749-010
017060300053	GR08/06LBLKX	48SBTF09FVP	PB63749-031
017070300010	GR08/06LCF	48SBTF09FVPB	PB63749-031
017070300016	GR08/06LCFX	48SBTF09FVPR	PB63920-005
017070300017	GR08/06LLCF	48SBTF09FVX	PB63920-005
017070300018	GR08/06LLCFX	48SBTF09FVXB	PB63930-012
017070300022	GR08/06LLMS	48SBTF09FVXG	PB63930-012
017070300024	GR08/06LMS	48SBTF09FVXR	PB63930-014
017070300027	GR08/06S71	48SBTF09FVXY	PB63930-014
017070300035	GR08/06S71X	48SBTF13DEX	PB63930-017
017070300038	GR08/06SCF	48SBTF13DPX	PB63930-017
017070300040	GR08/06SCFX	48SBTF13DPXB	PB63949-009
017080100007	GR08/06ZL71	48SBTF13DPXG	PB63949-009
017080100009	GR08/06ZLCF	48SBTF13DPXR	PB63949-010
017080100011	GR08/06ZS71	48SBTF13DPXY	PB63949-010
017090100002	GR08/06ZSCF	48SBTF13FVP	PB63949-011
017090100006	GR1	48SBTF13FVPB	PB63949-011
017090100007	GR10/06L71	48SBTF13FVX	PB63949-013
017090100008	GR10/06L71X	48SFAW13DPXB	PB63949-013
017100100016	GR10/06LCF	48SFAW13DPXG	PB63949-054
017100100018	GR10/06LCFX	48SFAW13DPXR	PB63949-054
017100300011	GR10/06LDPR71CF	48SFAW13DPXY	PB64349-06000N-XXX
017100300018	GR10/06LMS	48SFAW13DXX	PB64349-06000N-XXX
017100300020	GR10/06LMSX	48SFAW13FVXB	PB6440G-06100N-XXX
017120100007	GR10/06S71	48SFAW13FVXG	PB6440G-06100N-XXX
017120100009	GR10/06S71X	48SFAW13FVXR	PB6440G-06106N-XXX
018060500005	GR10/06SCF	48SFAW13FVXY	PB6440G-06106N-XXX
018060500012	GR10/06SCFX	48SFAW13FXX	PB6440G-10100N-XXX
018060500023	GR10/06SMS	48SFAW17DPXB	PB6440G-10100N-XXX
018060500025	GR10/06ZL71	48SFAW17DPXG	PBG-10A-CR
018060500028	GR10/06ZLCF	48SFAW17DPXR	PBG-10A-CR
018070500007	GR10/06ZS71	48SFAW17DXX	PBG-10A-NBR
018070500013	GR10/06ZSCF	48SFAW17FVXR	PBG-10A-NBR
018070500024	GR10/08L71	48SFAW17FXX	PBG-10A-NBRE
018070500028	GR10/08L71X	48SFAW21DPXB	PBG-10A-NBRE
20080896001	GR10/08LCF	48SFAW21DPXG	PBG-10A-SI
021070300001	GR10/08LCFX	48SFAW21DPXR	PBG-10A-SI
022060300003	GR10/08LDPR71CF	48SFAW21DPXY	PBG-10A-SIE
022071000001	GR10/08LMS	48SFAW21DXX	PBG-10A-SIE
022071000007	GR10/08LMSX	48SFAW21FVXB	PBG-10A-U
022080300015	GR10/08S71	48SFAW21FVXR	PBG-10A-U
022081400001	GR10/08S71X	48SFAW21FVXY	PBG-110-NBR

022090300049	GR10/08SCF	48SFAW21FXX	PBG-110-NBR
022090300050	GR10/08SCFX	48SFIW13DPXB	PBG-110-NBR70
022091400005	GR10/08SMS	48SFIW13DPXG	PBG-110-NBR70
022100200002	GR10/08ZL71	48SFIW13DPXR	PBG-110-SI
022101400024	GR10/08ZLCF	48SFIW13DPXY	PBG-110-SI
022120300030	GR10/08ZLVITSSACF	48SFIW13DXX	PBG-110-U
022120300032	GR10/08ZSCF	48SFIW13FVXY	PBG-110-U
022121000012	GR10-QC	48SFIW13FXX	PBG-150-NBR
031010100006	GR10-QC	48SFIW17DXX	PBG-150-NBR
031010100009	GR12/06L71	48SFIW17DXXB	PBG-150-SI
031010200001	GR12/06L71X	48SFIW17DXXG	PBG-150-SI
031020200001	GR12/06LCF	48SFIW17DXXR	PBG-150-U
031020200004	GR12/06LCFX	48SFIW17DXXY	PBG-150-U
031050100008	GR12/06LMS	48SFIW17FXX	PBG-15A-CR
031050100029	GR12/06LSPH71	48SFIW17FXXB	PBG-15A-CR
031050200006	GR12/06S71	48SFIW17FXXG	PBG-15A-FKM
031050200008	GR12/06S71X	48SFIW17FXXR	PBG-15A-FKM
031060100013	GR12/06SCF	48SFIW17FXXY	PBG-15A-NBR
031060200007	GR12/06SCFX	48SFIW21DPXB	PBG-15A-NBR
031060200037	GR12/06ZL71	48SFIW21DPXG	PBG-15A-NBRE
031070200001	GR12/06ZLCF	48SFIW21DXX	PBG-15A-NBRE
031070400003	GR12/06ZS71	48SFIW21FVXG	PBG-15A-SI
031070400012	GR12/06ZSCF	48SFIW21FVXR	PBG-15A-SI
031080100010	GR12/08L71	48SFIW21FXX	PBG-15A-U
031080100019	GR12/08L71X	48SFKP08FVX	PBG-15A-U
031080200001	GR12/08LCF	48SFKP12FVX	PBG-20B-CR
031080200036	GR12/08LCFX	48SFKP12FVXS	PBG-20B-CR
031080400003	GR12/08LMS	48SFTF06DPXR	PBG-20B-NBR
031080400009	GR12/08S71	48SFTF06DXX	PBG-20B-NBR
031090200001	GR12/08S71X	48SFTF06FVXR	PBG-20B-SI
031090200002	GR12/08SCF	48SFTF06FXX	PBG-20B-SI
031090200012	GR12/08SCFX	48SFTF09DPXB	PBG-20B-U
031090200023	GR12/08ZL71	48SFTF09DPXG	PBG-20B-U
031090300006	GR12/08ZLCF	48SFTF09DPXR	PBG-20-NBR
031090300029	GR12/08ZS71	48SFTF09DPXY	PBG-20-NBR
031090300049	GR12/08ZSCF	48SFTF09DXX	PBG-20-SI
031140100012	GR12/10L71	48SFTF09FVXG	PBG-20-SI
032010300003	GR12/10L71X	48SFTF09FVXR	PBG-20-U
032010300005	GR12/10LCF	48SFTF09FXX	PBG-20-U
032060200013	GR12/10LCFX	48SFTF13DPXG	PBG-30-NBR
032060200018	GR12/10LDPR71CF	48SFTF13DXX	PBG-30-NBR
032060200021	GR12/10LMS	48SFTF13FVXB	PBG-30-NBRE
032060200022	GR12/10S71	48SFTF13FVXG	PBG-30-NBRE
032060300009	GR12/10S71X	48SFTF13FVXR	PBG-30-SI
032060300010	GR12/10SCF	48SFTF13FVXY	PBG-30-SI
032060300034	GR12/10SCFX	48SFTF13FXX	PBG-30-U
032070400001	GR12/10ZL71	4900-40-00300-1000-000000	PBG-30-U
032070400010	GR12/10ZLCF	4900-40-00300-1000-000000	PBG-40-NBR
032080200022	GR12/10ZLSSACF	4900-40-00400-1000-000000	PBG-40-NBR
032080200025	GR12/10ZS71	4900-40-00400-1000-000000	PBG-40-NBRE
032080200028	GR12/10ZSCF	4900-40-00485-1000-000000	PBG-40-NBRE
032080400009	GR14/10S71	4900-40-00485-1000-000000	PBG-40-SI
032090200013	GR14/10S71X	4900-40-00490-3010-000000	PBG-40-SI

032090200017	GR14/10SCF	4900-40-00490-3010-000000	PBG-40-U
032090300078	GR14/10SCFX	4900-40-00600-1000-000000	PBG-40-U
032090300090	GR14/10ZS71	4900-40-00600-1000-000000	PBG-50-NBR
032100200035	GR14/10ZSCF	4900-40-00680-1000-000000	PBG-50-NBR
032100200037	GR14/12S71	4900-40-00680-1000-000000	PBG-50-NBRE
032100200040	GR14/12S71X	4900-40-00700-1000-000000	PBG-50-NBRE
032120200012	GR14/12SCF	4900-40-00700-1000-000000	PBG-50-SI
032120200013	GR14/12SCFX	4900-40-00790-1000-000000	PBG-50-SI
033071400012	GR14/12ZS71	4900-40-00790-1000-000000	PBG-50-U
033081400004	GR14/12ZSCF	4900-40-00800-1000-000000	PBG-50-U
033090400022	GR15/06LCF	4900-40-00800-1000-000000	PBG-75-NBR
033091300002	GR15/06LCFX	4900-40-00850-1000-000000	PBG-75-NBR
033091300004	GR15/08L71	4900-40-00850-1000-000000	PBG-75-NBRE
033091300007	GR15/08LCF	4900-40-00900-1000-000000	PBG-75-NBRE
033091300008	GR15/08LCFVOLX	4900-40-00900-1000-000000	PBG-75-SI
041060100005	GR15/08LCFX	4900-40-00920-1000-000000	PBG-75-SI
041060100006	GR15/10L71	4900-40-00920-1000-000000	PBG-75-U
041060100043	GR15/10L71X	4900-40-01000-1000-000000	PBG-75-U
041060100045	GR15/10LCF	4900-40-01000-1000-000000	PBG8341A
041060100174	GR15/10LCFX	4900-40-01000-1110-000000	PBH10X17RED30
041060100204	GR15/10LDPR71CF	4900-40-01000-1110-000000	PBL304S
041060100219	GR15/10LMS	4900-40-01000-1113-000000	PBL306SS
041060100234	GR15/10ZL71	4900-40-01000-1113-000000	PBL604S
041090100001	GR15/10ZLCF	4900-40-01100-1000-000000	PBL605S
041090100003	GR15/10ZLSSACF	4900-40-01100-1000-000000	PBLR403-402S
041090100006	GR15/10ZLVITCF	4900-40-01260-1000-000000	PBLR404-402S
041090100011	GR15/12L71	4900-40-01260-1000-000000	PBLR404-403S
041090100012	GR15/12L71X	4900-40-01350-1000-000000	PBLR405-404S
041090100027	GR15/12LCF	4900-40-01350-1000-000000	PBLR406-405S
041090100028	GR15/12LCFX	4900-40-01965-1000-000000	PBOG-50-M10X1.25-U
041090100030	GR15/12LMS	4900-40-01965-1000-000000	PBOG-50-M10X1.25-U
041090100042	GR15/12ZL71	4900-40-02230-1000-000000	PBOG-75-NBR-G1
041090100066	GR15/12ZLCF	4900-40-02230-1000-000000	PBOG-75-NBR-G1
041090100103	GR15/12ZLVITCF	4900-40-02980-1100-000000	PBT305-305S
041090100107	GR16/06SCFX	4900-40-02980-1100-000000	PBT602-602S
041090100121	GR16/08SCF	4900-40-04630-3000-000000	PBT604-604S
041090100148	GR16/08SCFX	4900-40-04630-3000-000000	PBT605-605S
041090100158	GR16/10S71	4900H-00610	PBT606-606S
041090100175	GR16/10S71X	4900H-00610	PBTC305-304/31BS
041090100233	GR16/10SCF	4900H-00650	PBTC306-304/31BS
041090100241	GR16/10SCFX	4900H-00650	PBTC602-602S
041090100380	GR16/10ZS71	4900H-00750	PBTC604-604S
041090100563	GR16/10ZSCF	4900H-00750	PBTC605-605S
041090100638	GR16/12S71	4900H-00790	PBTC606-606S
041090100709	GR16/12S71X	4900H-00790	PBTF-10A-NBR-G1
041090100710	GR16/12SCF	4900H-01100	PBTF-10A-NBR-G1
041090100749	GR16/12SCFX	4900H-01100	PBTF-10A-SI-G1
041090100781	GR16/12ZS71	4900H-01900	PBTF-10A-SI-G1
041090100783	GR16/12ZSCF	4900H-01900	PBTF-110-NBR-G4
041090100819	GR16/12ZSVITCF	4900H-02000	PBTF-110-NBR-G4
041090100909	GR16/14S71	4900H-02000	PBTF-110-SI-G4
041090100919	GR16/14S71X	4902 01 45	PBTF-110-SI-G4
041090100936	GR16/14SCF	4902 10 13	PBTF-110-U-G4

041090100975	GR16/14SCFX	4902 10 17	PBTF-110-U-G4
041090100982	GR16/14ZS71	4902 15 21	PBTF-150-NBR-G4
041090100983	GR16/14ZSCF	4902 20 27	PBTF-150-NBR-G4
041120400017	GR16S/12LCFX	4902 25 34	PBTF-150-SI-G4
041120400036	GR16S/15LCF	4902 32 42	PBTF-150-SI-G4
041120400055	GR16S/15LCFX	4902 40 49	PBTF-150-U-G4
041120400056	GR18/08LCF	4902 50 48	PBTF-150-U-G4
041120400060	GR18/08LCFX	4902 65 47	PBTF-15A-NBR-G1
041120400066	GR18/10L71	4902 80 46	PBTF-15A-NBR-G1
041120400103	GR18/10L71X	4906FIL	PBTF-15A-SI-G1
041120400129	GR18/10LCF	4906FIL	PBTF-15A-SI-G1
041120400146	GR18/10LCFX	490890L8	PBTF-20B-NBR-G1
041120400216	GR18/10LMS	490890L8	PBTF-20B-NBR-G1
041120400264	GR18/10ZL71	490R10	PBTF-20B-NBR-G2
041120400278	GR18/10ZLCF	490R10MTC	PBTF-20B-NBR-G2
041120400286	GR18/12L71	490R1230MTC	PBTF-20B-SI-G1
041120400367	GR18/12L71X	490R2410	PBTF-20B-SI-G1
041120400389	GR18/12LCF	490R2410MTC	PBTF-20B-SI-G2
041120400391	GR18/12LCFX	490R2430MTC	PBTF-20B-SI-G2
041120400397	GR18/12LDPR71CF	490R30	PBTF-20B-U-G1
041140400095	GR18/12LMS	490R30MTC	PBTF-20B-U-G1
041140400096	GR18/12ZL71	490RHH10MTC	PBTF-20B-U-G2
041140400151	GR18/12ZLCF	490RHHV10MTC	PBTF-20B-U-G2
041140400153	GR18/15L71	490RP30	PBTF-30-NBR-G1
041140400156	GR18/15L71X	491-00160	PBTF-30-NBR-G1
042060200027	GR18/15LCF	491-00160	PBTF-30-NBR-G2
042060200037	GR18/15LCFX	491-00500	PBTF-30-NBR-G2
042060200038	GR18/15LDPR71CF	491-00500	PBTF-30-SI-G1
042060200066	GR18/15ZL71	491-00650	PBTF-30-SI-G1
042060200070	GR18/15ZLCF	491-00650	PBTF-30-SI-G2
042060200111	GR18/15ZLSSACF	491-00900	PBTF-30-SI-G2
042060200114	GR18/15ZLVITSSACF	491-00900	PBTF-30-U-G1
042060200181	GR18L/16SCF	491-01400	PBTF-30-U-G1
042060200211	GR20/10S71	491-01400	PBTF-30-U-G2
042060200241	GR20/10S71X	491-01550	PBTF-30-U-G2
042060200255	GR20/10SCF	491-01550	PBTF-40-NBR-G1
042060200257	GR20/10SCFX	491-01650	PBTF-40-NBR-G1
042060200260	GR20/10ZS71	491-01650	PBTF-40-NBR-G2
042060200273	GR20/10ZSCF	491-02000	PBTF-40-NBR-G2
042060200282	GR20/12S71	491-02000	PBTF-40-SI-G1
042060200288	GR20/12S71X	491-03800	PBTF-40-SI-G1
042060200291	GR20/12SCF	491-03800	PBTF-40-SI-G2
042060200299	GR20/12SCFX	491-04200	PBTF-40-SI-G2
042060200300	GR20/12ZS71	491-04200	PBTF-40-U-G1
042060400002	GR20/12ZSCF	4912 15 21	PBTF-40-U-G1
042080200002	GR20/14SCF	4912 25 34	PBTF-40-U-G2
042080200011	GR20/16S71	491514C2	PBTF-40-U-G2
042080200049	GR20/16S71X	491514C2	PBTF-50-NBR-G1
042080200050	GR20/16SCF	491514P3	PBTF-50-NBR-G1
042080200062	GR20/16SCFX	491514P3	PBTF-50-NBR-G2
042080200069	GR20/16SMS	491514Q3	PBTF-50-NBR-G2
042080200089	GR20/16ZS71	491514Q3	PBTF-50-SI-G1
042080200109	GR20/16ZSCF	491G	PBTF-50-SI-G1

042080200164	GR20S/15LCFX	491G	PBTF-50-SI-G2
042080200173	GR20S/18LCF	491R	PBTF-50-SI-G2
042080200179	GR22/10LCF	491R	PBTF-50-U-G1
042080200183	GR22/10LCFX	492-00320	PBTF-50-U-G1
042080200252	GR22/12L71	492-00320	PBTF-50-U-G2
042080200297	GR22/12L71X	492-00375	PBTF-50-U-G2
042080200314	GR22/12LCF	492-00375	PBTF-75-NBR-G2
042080200326	GR22/12LCFX	492-00800	PBTF-75-NBR-G2
042080200353	GR22/12LDPR71CF	492-00800	PBTF-75-U-G2
042080200354	GR22/12LMS	492-01100	PBTF-75-U-G2
042080200380	GR22/12ZL71	492-01100	PBTK-10A-SI
042080200381	GR22/12ZLCF	492-01110	PBTK-10A-SI
042080200392	GR22/15L71	492-01110	PBTM-10A-NBR-G1
042080200395	GR22/15L71X	492-02000	PBTM-10A-NBR-G1
042080200396	GR22/15LCF	492-02000	PBTM-10A-NBR-M5
042080200397	GR22/15LCFX	492-02050	PBTM-10A-NBR-M5
042080200408	GR22/15LDPR71CF	492-02050	PBTM-10A-SI-G1
042080200411	GR22/15LMS	492-02100	PBTM-10A-SI-G1
042080200417	GR22/15LMSX	492-02100	PBTM-10A-SI-M5
042080200427	GR22/15ZL71	492-02550	PBTM-10A-SI-M5
042080200429	GR22/15ZLCF	492-02550	PBTM-15A-NBR-G1
042080200436	GR22/15ZLSSACF	492-02650	PBTM-15A-NBR-G1
042080200438	GR22/18L71	492-02650	PBTM-15A-NBR-M5
042080200440	GR22/18L71X	492-02900	PBTM-15A-NBR-M5
042080200443	GR22/18LCF	492-02900	PBTM-15A-SI-G1
042080200446	GR22/18LCFX	492-02932	PBTM-15A-SI-G1
042080200455	GR22/18LDPR71CF	492-02932	PBTM-15A-SI-M5
042080200458	GR22/18LMS	492-02980	PBTM-15A-SI-M5
042080200474	GR22/18ZL71	492-02980	PBTM-20B-NBR-G1
042080200475	GR22/18ZLCF	492-03050	PBTM-20B-NBR-G1
042080200476	GR22L/16SCFX	492-03050	PBTM-20B-NBR-G2
042080200477	GR25/12SCF	49207060P9	PBTM-20B-NBR-G2
042080200479	GR25/12SCFX	49207060P9	PBTM-20B-SI-G1
042080200481	GR25/14SCF	492070C2	PBTM-20B-SI-G1
042080200482	GR25/16S71	492070C2	PBTM-20B-SI-G2
042080200483	GR25/16S71X	492070P2	PBTM-20B-SI-G2
042080200484	GR25/16SCF	492070P2	PBTM-20B-U-G1
042080200485	GR25/16SCFX	492070P9	PBTM-20B-U-G1
042080200487	GR25/16ZS71	492070P9	PBTM-20B-U-G2
042080200488	GR25/16ZSCF	492070R5	PBTM-20B-U-G2
042080400003	GR25/16ZSVITCF	492070R5	PBTM-30-NBR-G1
042090200004	GR25/20S71	492-10	PBTM-30-NBR-G1
042090200031	GR25/20S71X	492-10-RL	PBTM-30-NBR-G2
042090200046	GR25/20SCF	492-12	PBTM-30-NBR-G2
042090200053	GR25/20SCFX	492-12-RL	PBTM-30-SI-G1
042090200076	GR25/20ZS71	492-16	PBTM-30-SI-G1
042090200107	GR25/20ZSCF	492-16-RL	PBTM-30-SI-G2
042090200108	GR25/20ZSVITCF	492190C2	PBTM-30-SI-G2
042090200170	GR25S/15LCFX	492190C2	PBTM-30-U-G1
042090200183	GR25S/22LCF	492190C7	PBTM-30-U-G1
042090200196	GR28/10LCFX	492190C7	PBTM-30-U-G2
042090200199	GR28/12L71X	492190P0	PBTM-30-U-G2
042090200238	GR28/12LCF	492190P0	PBTM-40-NBR-G1

042090200245	GR28/12LCFX	492190P2	PBTM-40-NBR-G1
042090200263	GR28/15LCF	492190P2	PBTM-40-NBR-G2
042090200264	GR28/15LCFX	492190P9	PBTM-40-NBR-G2
042090200271	GR28/18L71	492190P9	PBTM-40-SI-G1
042090200273	GR28/18L71X	492190Q1	PBTM-40-SI-G1
042090200277	GR28/18LCF	492190Q1	PBTM-40-SI-G2
042090200282	GR28/18LCFX	492190R5	PBTM-40-SI-G2
042090200284	GR28/18LMS	492190R5	PBTM-40-U-G1
042090200296	GR28/18ZL71	4922 25 34AC	PBTM-40-U-G1
042090200301	GR28/18ZLCF	492-20-WR	PBTM-40-U-G2
042090200302	GR28/22L71	492210C2	PBTM-40-U-G2
042090200326	GR28/22L71X	492210C2	PBTM-50-NBR-G1
042090200327	GR28/22LCF	492310C2	PBTM-50-NBR-G1
042090200339	GR28/22LCFX	492310C2	PBTM-50-NBR-G2
042090200341	GR28/22LDPR71CF	492-4	PBTM-50-NBR-G2
042090200342	GR28/22LMS	492425A2	PBTM-50-SI-G1
042090200343	GR28/22ZL71	492425A2	PBTM-50-SI-G1
042090200344	GR28/22ZLCF	492425C2	PBTM-50-SI-G2
042090200345	GR28/22ZLVITCF	492425C2	PBTM-50-SI-G2
042090200346	GR28L/20SCF	492425F4	PBTM-50-U-G1
042090200347	GR28L/25SCF	492425F4	PBTM-50-U-G1
042090200348	GR30/16S71	4924533D	PBTM-50-U-G2
042090200349	GR30/16S71X	4924533D	PBTM-50-U-G2
042090200350	GR30/16SCF	492453A2	PBTM-75-NBR-G2
042090200351	GR30/16SCFX	492453A2	PBTM-75-NBR-G2
042090200352	GR30/20S71	492453C2	PBTM-75-SI-G2
042090200353	GR30/20S71X	492453C2	PBTM-75-SI-G2
042090200354	GR30/20SCF	492-4-RL	PBTM-75-U-G2
042090200355	GR30/20SCFX	492-5	PBTM-75-U-G2
042090200356	GR30/20SMS	492-5-RL	PBTYS10A15SI
042090200357	GR30/20ZS71	492-6	PBTYS10A15SI
042090200358	GR30/20ZSCF	492670A4	PBTYS11020NBRG2
042090200486	GR30/20ZSNBR71	492670A4	PBTYS11020NBRG2
042090400006	GR30/25S71	492670C2	PBTYS11070NBRG2
042090400009	GR30/25S71X	492670C2	PBTYS11070NBRG2
042100200012	GR30/25SCF	492670F4	PBTYS20B15NBR
042100200029	GR30/25SCFX	492670F4	PBTYS20B15NBR
042100200078	GR30/25SDPR71CF	492-6-RL	PBTYS4030NBR
042100200089	GR30/25ZS71	492727C2	PBTYS4030NBR
042100200098	GR30/25ZSCF	492727C2	PBYK-110-NBR-G1
042100200112	GR35/18LCFX	492-8	PBYK-110-NBR-G1
042100200159	GR35/22L71	492-8-RL	PBYK-15A-NBR
042100200166	GR35/22L71X	49296501N7	PBYK-15A-NBR
042100200201	GR35/22LCF	49296501N7	PBYK-20B-SI
042100200220	GR35/22LCFX	49296502N7	PBYK-20B-SI
042100200229	GR35/22LMS	49296502N7	PBYK-30-NBR
042100200240	GR35/22ZL71	492ST-10	PBYK-30-NBR
042100200245	GR35/22ZLCF	492ST-12	PBYK-40-NBR
042100200258	GR35/28L71	492ST-16	PBYK-40-NBR
042100200260	GR35/28L71X	492ST-4	PBYK-50-NBR
042100200264	GR35/28LCF	492ST-5	PBYK-50-NBR
042100200265	GR35/28LCFX	492ST-6	PC2-D24-CL5
042100200268	GR35/28LMS	492ST-8	PC2-D24-CL5

042100200272	GR35/28ZL71	493-00400	PC6-02-FH0
042100200273	GR35/28ZLCF	493-00400	PC6-02-FH0
042100200274	GR35L/30SCFX	493-00450	PC6-02-H00
042100200275	GR38/16SCFX	493-00450	PC6-02-H00
042100200276	GR38/20SCF	493-00500	PC6-02-HN0
042100200277	GR38/20SCFX	493-00500	PC6-02-HN0
042100200278	GR38/25S71X	493-00510	PC6-02-M00
042100200279	GR38/25SCF	493-00510	PC6-02-M00
042100200280	GR38/25SCFX	493-00600	PC6-03-F00
042100200281	GR38/30S	493-00600	PC6-03-F00
042100200282	GR38/30S71	493-00620	PC6-C2-000
042100200283	GR38/30S71X	493-00620	PC6-C2-000
042120200035	GR38/30SCF	493-00700	PC6-C2-F00
042120200061	GR38/30SCFX	493-00700	PC6-C2-F00
042120200111	GR38/30ZS71	493-00765	PC6-C3-F00
042120200112	GR38/30ZSCF	493-00765	PC6-C3-F00
042120200140	GR38/30ZSNBR71	493-01150	PC6-C3-H00
042120200143	GR3-QC	493-01150	PC6-C3-H00
042120200154	GR3-QC	493-01400	PC6-C4-000
042120200160	GR42/10LCFX	493-01400	PC6-C4-000
042120200162	GR42/12LCFX	493-01800	PC6-C4-H00
042120200170	GR42/15LCFX	493-01800	PC6-C4-H00
042120200178	GR42/18LCFX	493-02530	PC6-C4-M00
042120200181	GR42/22LCFX	493-02530	PC6-C4-M00
042120200184	GR42/28L71	4932 15 21AC	PCC232-NB-D24SPL
042120200186	GR42/28L71X	4932 20 27AC	PCC232-NB-D24SPL
042120200188	GR42/28LCF	4932 25 34AC	PCC235-01-D24UPLB
042120200189	GR42/28LCFX	4932 40 49AC	PCC235-01-D24UPLB
042120200190	GR42/28ZLCF	493-4	PCC235-NB-D24SP
042120200191	GR42/35L71	493-4-BLU	PCC235-NB-D24SP
042120200194	GR42/35L71X	493-4-BLU-RL	PCCFF310SM
042130200031	GR42/35LCF	493-4-RL	PCCFF310SU
042130200071	GR42/35LCFX	493-5	PCCFF312SM
042130200084	GR42/35ZL71	493-5-BLU	PCCFF312SU
042130200092	GR42/35ZLCF	493-5-BLU-RL	PCCFF314SM
042130200094	GR5	493-5-RL	PCCFF314SU
042130200096	GR5	493-6	PCCFF316SM
495905E5	GR7	49364060C2	PCCFF316SU
495905E5	GR7	49364060C2	PCCFF320SM
051060100006	GRF10	493640C2	PCCFF320SU
052010300001	GRF10	493640C2	PCCFF32SM
052010300010	GRF2	493640C4	PCCFF32SU
052010300016	GRF5	493640C4	PCCFF33CFM
052050500004	GRF5	493640Q3	PCCFF33SM
052050500006	GRF7	493640Q3	PCCFF33SU
052120300009	GRF7	493-6-BLU	PCCFF34CFM
052140300014	GRIF100	493-6-BLU-RL	PCCFF34SM
052151000005	GRIF100	493-6-RL	PCCFF34SU
054020200008	GRIF38	493-8	PCCFF35SM
058010300009	GRIF38	493-8-BLU	PCCFF35SU
058010300010	GRIF50	493-8-BLU-RL	PCCFF36SM
058010300011	GRIF50	493-8-RL	PCCFF36SU
058010300014	GRIF63	4940-00960	PCCFF38SM

058011400013	GRIF63	4940-00960	PCCFF38SU
058141400002	GRIF75	494-00700	PCCFF610SM
058141400005	GRIF75	494-00700	PCCFF612SM
058141400007	GRP-95-009	494-02280	PCCFF62SM
058141400008	GRP-95-009	494-02280	PCCFF62SU
058161400004	GRP-95-013	494040C2	PCCFF63SM
058161400005	GRP-95-013	494040C2	PCCFF63SU
058161400008	GRP-95-020	494040C7	PCCFF64SM
058161400009	GRP-95-020	494040C7	PCCFF64SU
058201400005	GRP-95-089	495-00675	PCCFF65CFM
058201400010	GRP-95-089	495-00675	PCCFF65SM
058201400011	GRP-95-099	495-01400	PCCFF65SU
062120200003	GRP-95-099	495-01400	PCCFF66SM
066050200104	GRP-95-109	495-01520	PCCFF66SU
066050200115	GRP-95-109	495-01520	PCCFF68SM
066050200131	GRP-95-110	495-02200	PCCFF68SU
066050300190	GRP-95-110	495-02200	PCCM1020S
066070200102	GRP-95-111	495-02796	PCCM1200S
066070200119	GRP-95-111	495-02796	PCCM1600S
066070200123	GRP-95-112	495294C2	PCCM400S
066090100013	GRP-95-112	495294C2	PCCM400SV
066090200050	GRP-95-133	495865C2	PCCM600S
080030100001	GRP-95-133	495865C2	PCCM800S
090460009779	GRP-95-147	4958703D	PCCM800SV
090460009780	GRP-95-147	4958703D	PCCMS1200S
090460009781	GRP-95-154	495870A5	PCCMS1600S
090460009782	GRP-95-154	495870A5	PCCMS400S
090460009783	GRP-95-182	495870C2	PCCMS400SF
090460009784	GRP-95-182	495870C2	PCCMS400SV
090460009785	GRP-95-221	495880A5	PCCMS600S
090460010628	GRP-95-221	495880A5	PCCMS600SF
090460010629	GRP-95-223	495880C2	PCCMS600SV
091460010504	GRP-95-223	495880C2	PCCMS800S
101030200148	GRP-95-225	495900A2	PCCMS800SF
101030200149	GRP-95-225	495900A2	PCD00A-400
119040070008	GRP-95-255	495900C2	PCD-23-SI
200410002457	GRP-95-255	495900C2	PCD-23-SI
210440001237	GRP-95-256	495900C5	PCD2413-NB-D24SP
210440001378	GRP-95-256	495900C5	PCD2413-NB-D24SP
210441003843	GRP-95-257	495900F4	PCD245-01-D24UPLB
210441004245	GRP-95-257	495900F4	PCD245-01-D24UPLB
210441004792	GRP-95-259	495900K8	PCD245-NB-200SP
210441004793	GRP-95-259	495900K8	PCD245-NB-200SP
210441004921	GRP-95-260	495905A2	PCD245-NB-D24SP
210441004959	GRP-95-260	495905A2	PCD245-NB-D24SP
210441005020	GRP-95-261	495905B8	PCD-38-NBR
210441005174	GRP-95-261	495905B8	PCD-38-NBR
210441005187	GRP-95-262	495905C2	PCD-38-SI
210441005234	GRP-95-262	495905C2	PCD-38-SI
210441005235	GRP-95-262-80	495905C4	PCE345-NB-D24SP
210441005239	GRP-95-262-80	495905C4	PCE345-NB-D24SP
210441005332	GRP-95-264	495905C5	PCF1/L/35BS
210441005338	GRP-95-264	495905C5	PCF1/S/35BS

210441005383	GRP-95-266	495905F4	PCF112/L/50BS
210441020144	GRP-95-266	495905F4	PCF112/S/51BS
250120100001	GRP-95-267	495905K8	PCF114/L/43BS
400481001990	GRP-95-267	495905K8	PCF114/S/44BS
400481002452	GRP-95-268	495910N7	PCF12/L/22BS
400481002513	GRP-95-268	495910N7	PCF12/S/22BS
400481002966	GRP-95-288	4959153P	PCF2/L/62BS
400481002984	GRP-95-288	4959153P	PCF2/S/61BS
400481003010	GRP-95-289	496-01260	PCF212/L/76BS
400481003171	GRP-95-289	496-01260	PCF212/S/80BS
400481003260	GRP-95-290	496-01500	PCF3/L/90BS
400481003348	GRP-95-290	496-01500	PCF3/S/90BS
400481003360	GRP-95-291	496110S5	PCF312/L/102BS
400481003545	GRP-95-291	496110S5	PCF312/S/102BS
400481003550	GRP-95-293	496125C2	PCF34/L/28BS
400481003807	GRP-95-293	496125C2	PCF34/S/28BS
400481003874	GRP-95-393	496131C2	PCF38/L/18BS
400481003921	GRP-95-393	496131C2	PCF38/S/18BS
400481003941	GRP-95-539	496131C4	PCF4/L/114BS
400481003968	GRP-95-539	496131C4	PCF4/S/114BS
400481003989	GRP-95-584	496131P9	PCFF310GSM
400481003996	GRP-95-584	496131P9	PCFF310GSU
400481003998	GRP-95-613	496482P9	PCFF310NBRSSM
400481004005	GRP-95-613	496482P9	PCFF310NSU
400481004020	GRP-95-676	496560C2	PCFF310S
400481004027	GRP-95-676	496560C2	PCFF310SM
400481004029	GRP-95-724	496565N7	PCFF310SS
400481004042	GRP-95-724	496565N7	PCFF310SSM
400481004053	GRP-95-734	496637C2	PCFF310SU
400481004054	GRP-95-734	496637C2	PCFF312GSM
400481004058	GRP-95-747	496637K8	PCFF312GSU
400481004061	GRP-95-747	496637K8	PCFF312NBRSSM
400481004070	GRP-95-754	496895C2	PCFF312NSM
400481004076	GRP-95-754	496895C2	PCFF312NSU
400481004077	GRP-95-804	497-01730	PCFF312S
400481004079	GRP-95-804	497-01730	PCFF312SM
400481004080	GRP-95-808	498-00600	PCFF312SS
400481004083	GRP-95-808	498-00600	PCFF312SSM
400481004086	GRP-95-845	498-01840	PCFF312SU
400481004088	GRP-95-845	498-01840	PCFF314GSM
400481004089	GRP-95-846	4989FIL	PCFF314GSU
400481004093	GRP-95-846	4989FIL	PCFF314NBRSSM
400481004094	GRP-95-871	4991 00 21	PCFF314NSM
400481004114	GRP-95-871	4991 08 13	PCFF314NSU
400481004115	GRP-95-900	4991 08 13 64	PCFF314S
400481004118	GRP-95-900	4991 10 21	PCFF314SM
400481004122	GRP-95-902	4992 00 13	PCFF314SS
400481004124	GRP-95-902	4992 08 13	PCFF314SSM
400481004125	GRP-95-929	4992 08 17	PCFF314SU
400481004130	GRP-95-929	4992 08 17 64	PCFF316GSM
400481004132	GRP-95-930	4992 10 21	PCFF316GSU
400481004140	GRP-95-930	4992 10 21 64	PCFF316NBRSSM
400481004154	GRP-95-931	4998H	PCFF316NSM

400481004157	GRP-95-931	4A4F-LC6L-SS	PCFF316NSU
400481004159	GRP-95-935	4A7-R2GCK-KZ-SS	PCFF316S
400481004165	GRP-95-935	4A7-R2K-KZ-SS-1	PCFF316SM
400481004177	GRP-95-936	4A7-R2K-V-SS-2	PCFF316SS
400481004182	GRP-95-936	4A7-R2K-V-SS-3	PCFF316SSM
400481004183	GRP-95-942	4A7-R2K-V-SS-4	PCFF316SU
400481004184	GRP-95-942	4A7-R2K-V-SS-6	PCFF320GSM
400481004187	GRP-95-948	4A-B2LJ2-BN-SSP	PCFF320GSU
400481004197	GRP-95-948	4A-B2LJ2-BP	PCFF320NBRSSM
400481004202	GRP-95-960	4A-B2LJ2-BP-C3	PCFF320NSU
400481004211	GRP-95-960	4A-B2LJ2-EPR-SSP	PCFF320S
400481004216	GRP-95-970	4A-B2LJ2-SSP	PCFF320SM
400481004224	GRP-95-970	4A-B2LJ2-SSP-C3	PCFF320SS
400481004225	GRP-95-973	4A-B2LJ2-V-SSP	PCFF320SSM
400481004230	GRP-95-973	4A-B2LJ-BP	PCFF320SU
400481004240	GRP-95-981	4A-B2LJ-BP-C3	PCFF32G38SM
400481004241	GRP-95-981	4A-B2LJ-EPR-SSP	PCFF32G38SU
400481004243	GRP-95-997	4A-B2LJ-SSP	PCFF32GSM
400481004261	GRP-95-997	4A-B2XJ2-BP	PCFF32GSSM
400481004263	GRP-95-998	4A-B2XJ2-EPR-SSP	PCFF32GSU
400481004266	GRP-95-998	4A-B2XJ2-SSP	PCFF32N38SM
400481004281	GRP-96-002	4A-B2XJ2-SSP-C3	PCFF32N38SU
400481004291	GRP-96-002	4A-B2XJ2-V-SSP	PCFF32NBRSSM
400481004312	GRP-96-007	4A-B2XJ-BP	PCFF32NSM
400481004315	GRP-96-007	4A-B2XJ-SSP	PCFF32NSU
400481004334	GRP-96-102	4A-B2XJ-V-SSP	PCFF32S
400481004339	GRP-96-102	4A-B6LJ2-BN-SSP	PCFF32SM
400481004361	GRP-96-300	4A-B6LJ2-BP	PCFF32SS
400481004366	GRP-96-300	4A-B6LJ2-SSP	PCFF32SSM
400481004372	GRP-96-310	4A-B6LJ2-SSP-C3	PCFF32SU
400481004374	GRP-96-310	4A-B6LJ2-V-SSP	PCFF33CF
400481004381	GRP-96-311	4A-B6LJ-BP	PCFF33GSM
400481004384	GRP-96-311	4A-B6LJ-BP-C3	PCFF33GSU
400481004387	GRP-96-344	4A-B6LJ-SSP	PCFF33NBRSSM
400481004398	GRP-96-344	4A-B6LJ-SSP-C3	PCFF33NSM
400481004403	GRP-96-345	4A-B6LJ-V-SSP	PCFF33NSU
400481004404	GRP-96-345	4A-B6XJ2-BP	PCFF33S
400481004405	GRP-96-347	4A-B6XJ2-SSP	PCFF33SM
400481004433	GRP-96-347	4A-B6XJ2-SSP-C3	PCFF33SS
400481004434	GRP-96-348	4A-B6XJ2-V-SSP	PCFF33SSM
400481004435	GRP-96-348	4A-B6XJ-BP	PCFF33SU
400481004460	GRP-96-351	4A-B6XJ-SSP	PCFF34CF
400481004461	GRP-96-351	4A-B6XJ-V-SSP	PCFF34G34SM
400481004466	GRP-96-394	4A-B6XS2-SSP	PCFF34GSM
400481004478	GRP-96-394	4A-C4L-1/3-B	PCFF34GSSM
400481004486	GRP-96-404	4A-C4L-1/3-BN-SS	PCFF34GSU
400481004496	GRP-96-404	4A-C4L-1/3-BN-SS-C3	PCFF34NBRSSM
400481004500	GRP-96-634	4A-C4L-1/3-EPR-SS	PCFF34NSM
400481004512	GRP-96-634	4A-C4L-1/3-SS	PCFF34NSU
400481004519	GRP-96-635	4A-C4L-1/3-SS-C3	PCFF34S
400481004521	GRP-96-635	4A-C4L-100-BN-B	PCFF34SM
400481004529	GRP-96-636	4A-C4L-100-BN-SS	PCFF34SS
400481004535	GRP-96-636	4A-C4L-100-SS	PCFF34SSM

400481004559	GRP-96-637	4A-C4L-100-SS-C3	PCFF34SU
400481004561	GRP-96-637	4A-C4L-10-B	PCFF35G1CFM
400481004562	GRP-96-638	4A-C4L-10-BN-B	PCFF35G1SM
400481004566	GRP-96-638	4A-C4L-10-BN-SS	PCFF35GSM
400481004567	GRP-96-640	4A-C4L-10-EPR-SS	PCFF35GSSM
400481004568	GRP-96-640	4A-C4L-10-SS	PCFF35GSU
400481004572	GRP-96-642	4A-C4L-10-SS-C3	PCFF35NBRSSM
400481004579	GRP-96-642	4A-C4L-1-B	PCFF35NSM
400481004580	GRP-96-643	4A-C4L-1-B-C3	PCFF35NSU
400481004584	GRP-96-643	4A-C4L-1-BN-B	PCFF35S
400481004585	GRP-96-644	4A-C4L-1-BN-SS	PCFF35SM
400481004597	GRP-96-644	4A-C4L-1-EPR-B	PCFF35SS
400481004602	GRP-96-645	4A-C4L-1-EPR-SS	PCFF35SSM
400481004605	GRP-96-645	4A-C4L-1-SS	PCFF35SU
400481004622	GRP-96-646	4A-C4L-25-B	PCFF36G114SM
400481004631	GRP-96-646	4A-C4L-25-B-C3	PCFF36GSM
400481004643	GRP-96-652	4A-C4L-25-BN-SS	PCFF36GSSM
400481004649	GRP-96-652	4A-C4L-25-EPR-SS	PCFF36GSU
400481004656	GRP-96-654	4A-C4L-25-SS	PCFF36NBRSSM
400481004674	GRP-96-654	4A-C4L-50-B	PCFF36NSM
400481004685	GRP-96-685	4A-C4L-50-BN-B	PCFF36NSSM
400481004688	GRP-96-685	4A-C4L-50-EPR-SS	PCFF36NSU
400481004694	GRP-96-689	4A-C4L-50-SS	PCFF36S
400481004716	GRP-96-689	4A-C4L-50-SS-C3	PCFF36SM
400481004719	GRP-96-690	4A-C4L-5-B	PCFF36SS
400481004728	GRP-96-690	4A-C4L-5-BN-SS	PCFF36SSM
400481004736	GRP-96-700	4A-C4L-5-EPR-SS	PCFF36SU
400481004742	GRP-96-700	4A-C4L-5-SS	PCFF38G112SM
400481004743	GRP-96-710	4A-C4L-5-SS-C3	PCFF38GCFM
400481004752	GRP-96-710	4A-C4L-75-SS	PCFF38GSM
400481004757	GRP-96-711	4A-CO4L-1/3-BN-SS	PCFF38GSSM
400481004766	GRP-96-711	4A-CO4L-1/3-BN-SS-C3	PCFF38GSU
400481004768	GRP-96-712	4A-CO4L-1/3-EPR-SS	PCFF38NBRSSM
400481004780	GRP-96-712	4A-CO4L-1/3-V-SS	PCFF38NSM
400481004785	GRP-96-714	4A-CO4L-10-KZ-SS	PCFF38NSSM
400481004794	GRP-96-714	4A-CO4L-10-V-SS	PCFF38NSU
400481004797	GRP-96-715	4A-CO4L-1-BN-SS	PCFF38S
400481004800	GRP-96-715	4A-CO4L-1-EPR-SS	PCFF38SM
400481004806	GRP-96-716	4A-CO4L-1-KZ-SS	PCFF38SS
400481004813	GRP-96-716	4A-CO4L-1-V-SS	PCFF38SSM
400481004843	GRP-96-717	4A-CO4L-1-V-SS-C3	PCFF38SU
400481004854	GRP-96-717	4A-CO4L-25-KZ-SS	PCFF610GSM
400481004855	GRP-96-718	4A-CO4L-50-V-SS	PCFF610NBRSSM
400481004865	GRP-96-718	4A-CO4L-5-KZ-SS	PCFF610NSM
400481004867	GRP-96-725	4A-CO4L-5-V-SS	PCFF610S
400481004870	GRP-96-725	4A-CO4L-75-EPR-SS	PCFF610SM
400481004888	GRP-96-726	4A-CO4L-75-KZ-SS	PCFF610SS
400481004904	GRP-96-726	4A-CO4L-75-V-SS	PCFF610SSM
400481004907	GRP-96-739	4A-F4L-100-B	PCFF612NBRSSM
400481004915	GRP-96-739	4A-F4L-100-SS	PCFF612NSM
400481004917	GRP-96-754	4A-F4L-10-B	PCFF612S
400481004918	GRP-96-754	4A-F4L-10-BN-B	PCFF612SM
400481004923	GRP-96-755	4A-F4L-10-BN-SS	PCFF612SS

400481004926	GRP-96-755	4A-F4L-10-EPR-SS	PCFF612SSM
400481004927	GRP-96-801	4A-F4L-10-SS	PCFF62G38SM
400481004932	GRP-96-801	4A-F4L-10-SS-C3	PCFF62G38SU
400481004957	GRP-96-808	4A-F4L-1-B	PCFF62GSM
400481004965	GRP-96-808	4A-F4L-1-EPR-SS	PCFF62GSSM
400481004967	GRP-96-809	4A-F4L-1-SS	PCFF62GSU
400481004973	GRP-96-809	4A-F4L-1-SS-C3	PCFF62N38SM
400481004975	GRP-96-810	4A-F4L-250-B	PCFF62N38SU
400481004986	GRP-96-810	4A-F4L-250-SS	PCFF62NBRSSM
400481005000	GRP-96-819	4A-F4L-450-SS	PCFF62NSM
400481005007	GRP-96-819	4A-F4L-50-B	PCFF62NSU
400481005008	GRP-96-820	4A-F4L-50-BN-SS	PCFF62S
400481005019	GRP-96-820	4A-F4L-50-SS	PCFF62SM
400481005020	GRP-96-821	4A-F4L-5-B	PCFF62SS
400481005023	GRP-96-821	4A-F4L-5-BN-B	PCFF62SSM
400481005025	GRP-96-822	4A-F4L-5-BN-SS	PCFF62SU
400481005035	GRP-96-822	4A-F4L-5-EPR-SS	PCFF63GSM
400481005039	GRP-96-823	4A-F4L-5-SS	PCFF63GSU
400481005040	GRP-96-823	4A-F4L-5-SS-C3	PCFF63NBRSSM
400481005046	GRP-96-825	4A-FT4-100-SS	PCFF63NSM
400481005052	GRP-96-825	4A-FT4-10-BN-SS	PCFF63NSU
400481005053	GS 1	4A-FT4-10-SS	PCFF63S
400481005056	GS 1	4A-FT4-1-SS	PCFF63SM
400481005062	GS 2	4A-FT4-250-SS	PCFF63SS
400481005063	GS 2	4A-FT4-450-SS	PCFF63SSM
400481005066	GS 2R	4A-FT4-50-SS	PCFF63SU
400481005068	GS 3	4A-FT4-5-EPR-SS	PCFF64GCFM
400481005071	GS 3	4A-FT4-5-KZ-SS	PCFF64GSM
400481005072	GS 3R	4A-FT4-5-SS	PCFF64GSU
400481005073	GS 4	4A-H0A-V-SS-K	PCFF64NBRSSM
400481005074	GS 4	4A-H0A-V-SS-TC	PCFF64NSM
400481005076	GS 4RV	4A-H0L-BN-SS-K	PCFF64NSU
400481005078	GS 5	4A-H0L-V-SS-K	PCFF64S
400481005080	GS 5	4A-H0L-V-SS-TC	PCFF64SM
400481005082	GS 6	4A-H1A-BN-SS-K	PCFF64SS
400481005083	GS 6	4A-H1A-V-SS-K	PCFF64SSM
400481005093	GS020100N	4A-H1A-V-SS-TC	PCFF64SU
400481005097	GS020101N	4A-H1L-BN-B-TC	PCFF65CF
400481005101	GS020110N	4A-H1L-BN-SS-TC	PCFF65CFM
400481005102	GS020200N	4A-H1L-EPR-SS-K	PCFF65G1SM
400481005104	GS020210N	4A-H1L-EPR-SS-TC	PCFF65GCFM
400481005105	GS020300N	4A-H1L-V-SS-K	PCFF65GSM
400481005108	GS020310N	4A-H1L-V-SS-TC	PCFF65GSU
400481005114	GS020400N	4A-H2A-V-SS-K	PCFF65NBRSSM
400481005120	GS020410N	4A-H2A-V-SS-TC	PCFF65NSM
400481005123	GS020420N	4A-H2L-BN-SS-TC	PCFF65NSU
400481005124	GS020500N	4A-H2L-V-SS-K	PCFF65S
400481005126	GS020510N	4A-H2L-V-SS-TC	PCFF65SM
400481005128	GS020600V	4A-H3A-V-SS-K	PCFF65SS
400481005129	GS020610N	4A-H3A-V-SS-TC	PCFF65SSM
400481005133	GS020710N	4A-H3L-EPR-SS-K	PCFF65SU
400481005135	GS020800N	4A-H3L-V-SS-K	PCFF66G114SM
400481005136	GS020810N	4A-H3L-V-SS-TC	PCFF66GCFM

400481005137	GS020820N	4A-H4L-V-SS-K	PCFF66GSM
400481005138	GS021100N	4A-H4L-V-SS-TC	PCFF66GSSM
400481005144	GS021100V	4A-H5A-V-SS-TC	PCFF66GSU
400481005147	GS021101N	4A-H5L-EPR-SS-TC	PCFF66NBRSSM
400481005148	GS021200N	4A-H5L-V-SS-K	PCFF66NSM
400481005149	GS021201N	4A-H5L-V-SS-TC	PCFF66NSU
400481005152	GS021300N	4A-H6A-EPR-SS-K	PCFF66S
400481005154	GS021310N	4A-H6A-V-SS-K	PCFF66SM
400481005156	GS021400N	4A-H6A-V-SS-TC	PCFF66SS
400481005157	GS021400V	4A-H6L-BN-SS-K	PCFF66SSM
400481005163	GS021410N	4A-H6L-V-SS-K	PCFF66SU
400481005169	GS021421V	4A-H6L-V-SS-TC	PCFF66VITSM
400481005176	GS021500N	4A-HB4XK-SSP	PCFF68G112SM
400481005179	GS021600N	4A-HB4XPKRBN-SSP	PCFF68GSM
400481005180	GS021600V	4A-HB4XPKR-EPR-SSP	PCFF68GSU
400481005182	GS021800N	4A-HB4XPKR-SSP	PCFF68NBRSSM
400481005186	GS021810N	4A-LC6L-SS	PCFF68NSM
400481005187	GS022000N	4A-MB4APFA-SSP	PCFF68NSU
400481005188	GS022200N	4A-MB4LPFA-BP	PCFF68S
400481005192	GS022500N	4A-MB4LPFA-BP-C3	PCFF68SM
400481005199	GS022700N	4A-MB4LPFA-SSP	PCFF68SS
400481005204	GS022710N	4A-MB4LPFA-SSP-C3	PCFF68SSM
400481005208	GS022710N9069	4A-MB4XPFA-BP	PCFF68SU
400481005210	GS023000N	4A-MB4XPFA-SSP	PCG-10-NBR
400481005213	GS023100N	4A-MB4XPFA-SSP-C3	PCG-10-NBR
400481005215	GS023200N	4A-MB6APFA-SSP	PCG-10-SI
400481005222	GS023300N	4A-MB6LPFA-BP	PCG-10-SI
400481005228	GS023300V	4A-MB6LPFA-BP-C3	PCG-10-U
400481005229	GS023500N	4A-MB6LPFA-SSP	PCG-10-U
400481005234	GS024000N	4A-MB6LPFA-SSP-C3	PCG-15-NBR
400481005235	GS024200N	4A-MB6XPFA-BP	PCG-15-NBR
400481005236	GS024500N	4A-MB6XPFA-SSP	PCG-15-SI
400481005238	GS025100N	4A-MB6XPFA-SSP-C3	PCG-15-SI
400481005239	GS025110N	4A-NLA-BN-SS-V	PCG-15-SI30
400481005242	GS025300N	4A-NLA-V-SS-K	PCG-15-SI30
400481005243	GS025310N	4A-NLA-V-SS-V	PCG-15-SIE
400481005247	GS025320N	4A-NLL-BN-B-K	PCG-15-SIE
400481005249	GS025700N	4A-NLL-BN-B-V	PCG-15-U
400481005263	GS025900N	4A-NLL-BN-SS-K	PCG-15-U
400481005264	GS027000N	4A-NLL-BN-SS-V	PCG-18-NBR
400481005265	GS027200N	4A-NLL-KZ-SS-K	PCG-18-NBR
400481005267	GS027800N	4A-NLL-V-SS-K	PCG-18-SI
400481005268	GS028000N	4A-NLL-V-SS-V	PCG-18-SI
400481005278	GS028010N	4A-NMA-BN-B-K	PCG-18-SI30
400481005280	GS028100N	4A-NMA-BN-SS-K	PCG-18-SI30
400481005283	GS028110N	4A-NMA-V-B-V	PCG-18-U
400481005287	GS028500N	4A-NMA-V-SS-K	PCG-18-U
400481005297	GS028510N	4A-NMA-V-SS-V	PCG-20-FKM
400481005298	GS028600N	4A-NML-BN-SS-K	PCG-20-FKM
400481005300	GS028610N	4A-NML-BN-SS-V	PCG-20-NBR
400481005302	GS040200N	4A-NML-EPR-SS-K	PCG-20-NBR
400481005311	GS040200NC	4A-NML-EPR-SS-V	PCG-20-SI
400481005312	GS040420N	4A-NML-KZ-SS-K	PCG-20-SI

400481005318	GS040600N	4A-NML-V-SS-K	PCG-20-SI30
400481005323	GS040600NC	4A-NML-V-SS-V	PCG-20-SI30
400481005327	GS040610N	4A-NP6AK-SSP	PCG-20-U
400481005328	GS040800N	4A-NP6AR-BN-SSP	PCG-20-U
400481005339	GS040800NC	4A-NP6AR-G-SSP	PCG-30-FKM
400481005340	GS040810N	4A-NP6AR-SSP	PCG-30-FKM
400481005341	GS040810NC	4A-NP6LK-SSP	PCG-30-NBR
400481005350	GS040820N	4A-NP6LK-V-SSP	PCG-30-NBR
400481005359	GS041200N	4A-NP6LR-G-SSP	PCG-30-SI
400481005360	GS041200NC	4A-NP6LR-SSP	PCG-30-SI
400481005361	GS041300N	4A-NP6LR-V-SSP	PCG-30-SI30
400481005362	GS041310N	4A-NSA-BN-B-K	PCG-30-SI30
400481005363	GS041400N	4A-NSA-BN-B-V	PCG-30-SIE
400481005364	GS041410N	4A-NSA-V-B-V	PCG-30-SIE
400481005371	GS041600N	4A-NSA-V-SS-K	PCG-30-U
400481005372	GS041620N	4A-NSA-V-SS-V	PCG-30-U
400481005373	GS041700N	4A-NSL-BN-B-K	PCG-40-FKM
400481005374	GS041700NC	4A-NSL-BN-B-V	PCG-40-FKM
400481005378	GS041800N	4A-NSL-BN-SS-K	PCG-40-NBR
400481005381	GS041800NC	4A-NSL-BN-SS-V	PCG-40-NBR
400481005394	GS042000N	4A-NSL-EPR-SS-V	PCG-40-SI
400481005399	GS042000NC	4A-NSL-KZ-SS-K	PCG-40-SI
400481005400	GS042110N	4A-NSL-KZ-SS-V	PCG-40-SI30
400481005401	GS042500N	4A-NSL-V-SS-K	PCG-40-SI30
400481005402	GS042700N	4A-NSL-V-SS-K-C3	PCG-40-U
400481005411	GS042700NC	4A-NSL-V-SS-V	PCG-40-U
400481005419	GS043000N	4A-PR4-BNT-SS	PCG-5-FKM
400481005421	GS043100N	4A-PR4-EPRT-SS	PCG-5-FKM
400481005424	GS043100N9102	4A-PR4-VT-B	PCG-5-NBR
400481005428	GS043100NC	4A-PR4-VT-B-C3	PCG-5-NBR
400481005430	GS043110N	4A-PR4-VT-SS	PCG-5-NBRE
400481005435	GS043300N	4A-PR4-VT-SS-C3	PCG-5-NBRE
400481005436	GS043500N	4A-RH4A-BNT-SS	PCG-5-SI
400481005443	GS043500NC	4A-RH4A-BNT-SS-K1	PCG-5-SI
400481005456	GS043510N	4A-RH4A-BNT-SS-K3	PCG-5-U
400481005457	GS044000N	4A-RH4A-BNT-SS-K4	PCG-5-U
400481005460	GS044200NC	4A-RH4A-BNT-SS-K5	PCG-60-FKM
400481005468	GS044400N	4A-RH4A-BNT-SS-K6	PCG-60-FKM
400481005470	GS044500N	4A-RH4A-BNT-SS-K7	PCG-60-NBR
400481005471	GS045100N	4A-RH4A-BNT-SS-K8	PCG-60-NBR
400481005472	GS045200ND	4A-RH4A-EPR-T-SS	PCG-60-SI
400481005477	GS045300N	4A-RH4A-EPRT-SS-K2	PCG-60-SI
400481005478	GS045400ND	4A-RH4A-EPRT-SS-K3	PCG-60-U
400481005479	GS045410N	4A-RH4A-EPRT-SS-K5	PCG-60-U
400481005481	GS045700N	4A-RH4A-EPRT-SS-K6	PCG-7-FKM
400481005482	GS045700ND	4A-RH4A-EPRT-SS-K8	PCG-7-FKM
823493902325	GS045900ND	4A-RH4A-KZT-SS	PCG-7-NBR
823493902625	GS048000N	4A-RH4A-KZT-SS-K3	PCG-7-NBR
0000 01 68	GS048010N	4A-RH4A-KZT-SS-K7	PCG-7-SI
000-6691-01	GS048100N	4A-RH4A-KZT-SS-MN-K1	PCG-7-SI
000-8032-03	GS048110N	4A-RH4A-KZT-SS-MN-K7-C3	PCG-7-U
000-8032-06	GS048500N	4A-RH4A-VT-SS	PCG-7-U
000-8032-15	GS048600N	4A-RH4A-VT-SS-K1	PCG-90-FKM

001-0017-900	GS048610N	4A-RH4A-VT-SS-K1-C3	PCG-90-FKM
001-0028-900	GS048800N	4A-RH4A-VT-SS-K2	PCG-90-NBR
001-0045-020-001	GS060200N	4A-RH4A-VT-SS-K3	PCG-90-NBR
002-0010-900	GS060400N	4A-RH4A-VT-SS-K4	PCG-90-SI
002-0017-900	GS060510N	4A-RH4A-VT-SS-K5	PCG-90-SI
002118-6	GS060600N	4A-RH4A-VT-SS-K6	PCK600S
002-1817-01	GS060610N	4A-RH4A-VT-SS-K7	PCM10-316
002-1840-01	GS060700N	4A-RH4A-VT-SS-K8	PCM10-6MO
002-2163-01	GS060800N	4A-RH4A-VT-SS-MN-K1	PCM10-HC
002-2238-01	GS060810N	4A-RH4A-VT-SS-MN-K2	PCM10-TI
002-2504-05	GS061100N	4A-RH4A-VT-SS-MN-K6	PCM1200S
002-2530-01	GS061200N	4A-RL4A-BNT-SS	PCM1200SV
002-2565-01	GS061400N	4A-RL4A-BNT-SS-KA	PCM12-316
002-3618-01	GS061600N	4A-RL4A-BNT-SS-KC	PCM12-316/3
002-3619-01	GS061600V	4A-RL4A-BNT-SS-KD	PCM12-6MO
002-3624-01	GS061700N	4A-RL4A-BNT-SS-KE	PCM12-HC
003-0023-050-KIT	GS061710N	4A-RL4A-BNT-SS-KG	PCM12-M
003-0096-900	GS061800N	4A-RL4A-EPRT-SS	PCM14-316
003-0111-900	GS068000N	4A-RL4A-EPRT-SS-KA	PCM1600S
003-0120-900	GS068010N	4A-RL4A-EPRT-SS-KC	PCM1600SV
003-0130-900	GS068010V	4A-RL4A-EPRT-SS-KD	PCM16-316
003-0137-900	GS068100N	4A-RL4A-EPRT-SS-KF	PCM18-316
003-0141-900	GS068110N	4A-RL4A-EPRT-SS-KG	PCM18-6MO
003-0165-900	GS068300N	4A-RL4A-EPRT-SS-MN	PCM25-316
003-0175-900	GS068500N	4A-RL4A-KZT-SS	PCM3-316
003-0189-900	GS068510N	4A-RL4A-KZ-T-SS-KA	PCM400S
003-0194-900	GS068600N	4A-RL4A-KZT-SS-KB	PCM400SF
003-0214-900	GS068610N	4A-RL4A-KZT-SS-KC	PCM600S
003-0218-900	GS2060WBNFG161	4A-RL4A-KZT-SS-MN	PCM600SS
003-0241-900	GS2125WBNFG161	4A-RL4A-KZT-SS-MN-KC	PCM600SV
003-0257-900	GS220QBNFG161	4A-RL4A-VT-SS	PCM6-316
003-0258-900	GS6035WVNXG246	4A-RL4A-VT-SS-KA	PCM6-316-OXY
003-0260-900	GS6060WBNFG241	4A-RL4A-VT-SS-KA-C3	PCM6-6MO
003-0264-900	GS620QBNFG241	4A-RL4A-VT-SS-KB	PCM800S
003-0328-900	GS7035WVNXG246	4A-RL4A-VT-SS-KC	PCM800SF
003-0347-900	GS7035WVNXG247	4A-RL4A-VT-SS-KD	PCM800SV
003-0356-900	GS7060WBNFG241	4A-RL4A-VT-SS-KD-C3	PCM820S
003-0359-900	GS710QBNFG241	4A-RL4A-VT-SS-KE	PCM8-316
003-0376-900	GS720QBNFG245	4A-RL4A-VT-SS-KE-C3	PCM-D11
003-0421-900	GT023300N	4A-RL4A-VT-SS-KF	PCM-D11
003-0461-900	GT023300V	4A-RL4A-VT-SS-KF-C3	PCMS1200S
003-0862-900	GT023310N	4A-RL4A-VT-SS-MN	PCMS1600S
003-1708-03	GT05/03	4A-RL4A-VT-SS-MN-KA	PCMS1600SF
003-1879-06	GT05/03E	4A-RL4A-VT-SS-MN-KB	PCMS400S
003-1898-110	GT05/03N	4A-RL4A-VT-SS-MN-KG	PCMS600S
003-2495-03	GT05/03R	4A-SN6LR-G-SS	PCMS600SV
003-2496-01	GT05/04	4A-SN6LR-SS	PCMS800S
003-2755-01	GT05/04E	4A-SWB4L-RT-V-SS	PCMS800SF
00328-10-A45S	GT05/04N	4A-U6LB-G-SS	PCMS800SV
00328-10-B45S	GT05/04R	4A-U6LB-G-SS-HT	PCO235-NB-D24SP
00328-10-C45S	GT06/04	4A-U6LR-G-SS	PCO235-NB-D24SP
00328-10-D45S	GT06/04N	4A-U6LR-G-SS-HT	PCO3415-04-200D
00329-10-A45S	GT10/04	4A-U6LR-T-SS	PCO3415-04-200D

00329-10-B45S	GT10/04E	4A-V2LN-SS	PCS2413-NB-D24SP
00329-10-C45S	GT10/04K	4A-V4AK-SS	PCS2413-NB-D24SP
00329-10-D45S	GT10/04N	4A-V4AN-B	PCS242-NB-D24SP
003-2918-01	GT10/04R	4A-V4AN-SS	PCS242-NB-D24SP
00330-10-A45S	GT10/06	4A-V4AQ-11AC-SS	PCS245-01-D24UPLB
00330-10-B45S	GT10/06E	4A-V4AQ-EPR-SSP	PCS245-01-D24UPLB
00330-10-C45S	GT10/06K	4A-V4AQ-SSP	PCS245-M5-D24SP
00330-10-D45S	GT10/06KN	4A-V4AR-SS	PCS245-M5-D24SP
003-3094-01	GT10/06N	4A-V4LK-B	PCS245-NB-100SP
00331-10-A45S	GT10/06R	4A-V4LK-EPR-SS	PCS245-NB-100SP
00331-10-B45S	GT10/08	4A-V4LK-SS	PCS245-NB-D12SP
00331-10-C45S	GT10/08K	4A-V4LN-B	PCS245-NB-D12SP
00331-10-D45S	GT10/08N	4A-V4LN-BN-SS	PCS245-NB-D24SP
003-3162-08	GT10/09	4A-V4LN-EPR-SS	PCS245-NB-D24SP
003-3162-09	GT10/09E	4A-V4LN-SS	PCS245-NB-H24SP
003-3163-01	GT10/09N	4A-V4LN-SS-C3	PCS245-NB-H24SP
00332-10-A45S	GT10/09R	4A-V4LN-V-SS	PCS245Y-NB-D24SP
00332-10-B45S	GT13/04	4A-V4LQ-11AC-B	PCS245Y-NB-D24SP
00332-10-C45S	GT13/04DP	4A-V4LQ-11AC-B-C3	PCTF-10-NBR-G1
00332-10-D45S	GT13/04DX	4A-V4LQ-11AC-SS	PCTF-10-NBR-G1
00333-10-A45S	GT13/04E	4A-V4LQ-11AC-SS-C3	PCTF-10-SI-G1
00333-10-B45S	GT13/04FX	4A-V4LQ-11AO-SS	PCTF-10-SI-G1
00333-10-C45S	GT13/04K	4A-V4LQ-BP	PCTF-15-NBR-G1
00333-10-D45S	GT13/04N	4A-V4LQ-BP-C3	PCTF-15-NBR-G1
003-3438-01	GT13/04R	4A-V4LQ-EPR-11AC-SS	PCTF-15-SI-G1
003-3438-02	GT13/06	4A-V4LQ-EPR-11AO-SS	PCTF-15-SI-G1
003-3438-03	GT13/06DP	4A-V4LQ-KZ-11AC-SS	PCTF-18-NBR-G1
004-0009-900	GT13/06DX	4A-V4LQ-KZ-11AO-SS	PCTF-18-NBR-G1
005-0001-067-002	GT13/06E	4A-V4LQ-KZ-SSP	PCTF-18-SI-G1
005-0001-125-002	GT13/06FX	4A-V4LQ-SSP	PCTF-18-SI-G1
005065-6	GT13/06K	4A-V4LR-B	PCTF-20-NBR-G1
006-0001-040-2	GT13/06KN	4A-V4LR-B-C3	PCTF-20-NBR-G1
006-0001-047-2	GT13/06N	4A-V4LR-SS	PCTF-20-SI-G1
006-1639-03	GT13/06R	4A-V4LR-SS-C3	PCTF-20-SI-G1
006-1738-01	GT13/08	4B14468-1	PCTF-30-NBR-G1
006-1741-01	GT13/08K	4B14468-2	PCTF-30-NBR-G1
006-1742-01	GT13/08KN	4B2TU4-316	PCTF-30-NBR-G2
006KLAO13MVX	GT13/08N	4B2TU6-316	PCTF-30-NBR-G2
006KLAR16MVX	GT13/08R	4B6S10L8	PCTF-30-SI-G1
006KLIW13MVX	GT13/09	4B6S10M6	PCTF-30-SI-G1
006KLTP10MVX	GT13/09E	4B6S10P4	PCTF-30-SI-G2
006SLAR16MVX	GT13/09K	4B6S10P6	PCTF-30-SI-G2
006SLAW13MVX	GT13/09KN	4B6S10P8	PCTF-40-NBR-G1
008-000203	GT13/09N	4BBMTXS	PCTF-40-NBR-G1
008-000208	GT13/09R	4BBMTXSS	PCTF-40-NBR-G2
008-000209	GT13/10	4BC2-316	PCTF-40-NBR-G2
008-001803	GT13/10DX	4BC2-NNR	PCTF-40-SI-G1
008-001807	GT13/10KN	4BC4-316	PCTF-40-SI-G1
008-001808	GT13/10N	4BC4-6MO	PCTF-40-SI-G2
008-001809	GT13/13	4BC4-825	PCTF-40-SI-G2
008-002805	GT13/13K	4BC4-B	PCTF-5-NBR-G1
008-003903	GT13/13KN	4BC4-IIY	PCTF-5-NBR-G1
008-004205	GT13/13N	4BC4-M	PCTF-5-SI-G1

008-004908	GT14/13	4BC4-NNR	PCTF-5-SI-G1
008-006002	GT16/13	4BC4-TTZ	PCTF-60-NBR-G1
008-008102	GT17/06	4BCM6-316	PCTF-60-NBR-G1
008-010208	GT17/06DX	4BF4-316	PCTF-60-NBR-G2
008079-6	GT17/06E	4BF4-6MO	PCTF-60-NBR-G2
009-0070-100-001	GT17/06FX	4BF4-6MO-NC	PCTF-60-SI-G1
009-0089-900	GT17/06K	4BF4-825	PCTF-60-SI-G1
009-0100-900	GT17/06KN	4BF4-B	PCTF-60-SI-G2
009-0143-900	GT17/06N	4BF4-M	PCTF-60-SI-G2
009-0172-900	GT17/06R	4BF4-T	PCTF-7-NBR-G1
009-0181-010-003	GT17/08	4BF8822	PCTF-7-NBR-G1
009-0181-050-2	GT17/08K	4BLEN4-316	PCTF-7-SI-G1
009-0181-900	GT17/08KN	4BLEN4-6MO	PCTF-7-SI-G1
009-0185-020-KIT	GT17/08N	4BLEN4-825	PCTF-90-NBR-G2
009-0207-900	GT17/09	4BLEN4-B	PCTF-90-NBR-G2
009-0269-900	GT17/09DX	4BLEN4-IIY	PCTF-90-SI-G2
009-0270-900	GT17/09E	4BLEN4-M	PCTF-90-SI-G2
009-0272-900	GT17/09FX	4BLEN4-NNR	PCTM-10-NBR-G1
009-0279-050-2	GT17/09K	4BLP4-316	PCTM-10-NBR-G1
009-0279-900	GT17/09KN	4BLP4-6MO	PCTM-10-NBR-M5
009-0280-050-2	GT17/09N	4BLP4-825	PCTM-10-NBR-M5
009-0309-010-003	GT17/09R	4BLP4-B	PCTM-10-SI-G1
009-0347-900	GT17/10	4BLP4-HC	PCTM-10-SI-G1
009-0381-900	GT17/10N	4BLP4-M	PCTM-10-SI-M5
009-0424-030-KIT	GT17/13	4BLP4-TI	PCTM-10-SI-M5
009-0442-900	GT17/13C	4BMLMOLYSS	PCTM-10-U-M5
009-0465-900	GT17/13DX	4BMLS	PCTM-10-U-M5
009-0582-900	GT17/13E	4BMLSBP	PCTM-15-NBR-G1
009-0595-020-KIT	GT17/13FX	4BMLSS	PCTM-15-NBR-G1
009-0631-900	GT17/13K	4BMTXS	PCTM-15-NBR-M5
009-0933-900	GT17/13KN	4BMTXSBP	PCTM-15-NBR-M5
009-1421-900	GT17/13N	4BMTXSS	PCTM-15-SI-G1
009-1643-900	GT17/13R	4BN4-316	PCTM-15-SI-G1
009-1668-900	GT21/06	4C3MXS	PCTM-15-SI-M5
009-1669-900	GT21/06K	4C3MXSS	PCTM-15-SI-M5
009-1670-900	GT21/06KN	4C3P4S	PCTM-15-SI-M6
009-1671-900	GT21/06N	4C3T4S	PCTM-15-SI-M6
009-KELF-KIT	GT21/08N	4C4OMLOS	PCTM-15-U-M5
009-PEEK-KIT	GT21/09	4C4OMXS	PCTM-15-U-M5
009-PTFE-KIT	GT21/09E	4C4OMXSS	PCTM-18-NBR-G1
009-VSPL-KIT	GT21/09K	4C5OMLOS	PCTM-18-NBR-G1
0101 04 10	GT21/09KN	4C5OMXS	PCTM-18-NBR-M5
0101 04 10 39	GT21/09N	4C5OMXSS	PCTM-18-NBR-M5
0101 04 19	GT21/09R	4C5OMXSV	PCTM-18-SI-G1
0101 04 55	GT21/10	4C6MK4S	PCTM-18-SI-G1
0101 04 56	GT21/10N	4C6MK4SS	PCTM-18-SI-M5
0101 05 10	GT21/13	4C6MLOS	PCTM-18-SI-M5
0101 05 10 39	GT21/13E	4C6MLOSEPDM	PCTM-18-U-G1
0101 05 56	GT21/13K	4C6MLOSS	PCTM-18-U-G1
0101 05 60	GT21/13KN	4C6MLOSSV	PCTM-20-NBR-G1
0101 06 10	GT21/13N	4C6MXS	PCTM-20-NBR-G1
0101 06 10 39	GT21/13R	4C6MXSBP	PCTM-20-NBR-M5
0101 06 13	GT21/16	4C6MXSS	PCTM-20-NBR-M5

0101 06 13 39	GT21/16K	4CMTXS	PCTM-20-SI-G1
0101 06 60	GT21/16N	4CMTXSS	PCTM-20-SI-G1
0101 06 62	GT21/19	4COL-BLU	PCTM-20-SI-M5
0101 08 10	GT21/19N	4COL-RED	PCTM-20-SI-M5
0101 08 10 39	GT24/19	4CP-6MO	PCTM-30-NBR-G1
0101 08 13	GT26/13	4E6MK4S	PCTM-30-NBR-G1
0101 08 13 39	GT26/13K	4E6MK4SS	PCTM-30-NBR-G2
0101 08 17	GT26/13KN	4ECR4-316	PCTM-30-NBR-G2
0101 08 17 39	GT26/13N	4ECR4-6MO	PCTM-30-SI-G1
0101 08 65	GT26/16	4ECR4-825	PCTM-30-SI-G1
0101 08 66	GT26/16K	4ECR4-B	PCTM-30-SI-G2
0101 08 68	GT26/16KN	4ECR4-M	PCTM-30-SI-G2
0101 10 13	GT26/16N	4ECR4-NNR	PCTM-40-NBR-G1
0101 10 13 39	GT26/19	4ECR4-TTZ	PCTM-40-NBR-G1
0101 10 17	GT26/19K	4EE4-316	PCTM-40-NBR-G2
0101 10 17 39	GT26/19KN	4EE4-6MO	PCTM-40-NBR-G2
0101 10 70	GT26/19N	4EE4-825	PCTM-40-SI-G1
0101 10 71	GT26/25	4EE4-B	PCTM-40-SI-G1
0101 10 74	GT26/25STAHL	4EE4-M	PCTM-40-SI-G2
0101 10 75	GT33/25	4EE4-NNR	PCTM-40-SI-G2
0101 10 78	GT33/25N	4EE4-TTZ	PCTM-5-NBR-G1
0101 12 13	GT400S	4EMK4S	PCTM-5-NBR-G1
0101 12 13 39	GT420S	4EMK4SS	PCTM-5-NBR-M5
0101 12 17	GT4E105Q1EUR	4EMLOSS	PCTM-5-NBR-M5
0101 12 17 39	GT4E110Q1EUR	4EMTXS	PCTM-5-SI-G1
0101 12 21	GT4E110Q1UK	4EMTXSS	PCTM-5-SI-G1
0101 12 21 39	GT4E120Q1UK	4ET4-316	PCTM-5-SI-M5
0101 12 74	GT6-L5	4ET4-316-OXY	PCTM-5-SI-M5
0101 12 75	GTP02340201N	4ET4-6MO	PCTM-60-NBR-G1
0101 14 17	GTP02340601N	4ET4-6MO-NC	PCTM-60-NBR-G1
0101 14 17 39	GTP02341801N	4ET4-825	PCTM-60-NBR-G2
0101 14 21	GTS400S	4ET4-B	PCTM-60-NBR-G2
0101 14 21 39	GUA1236	4ET4-IIY	PCTM-60-SI-G1
0101 14 78	GUFE06SVITX	4ET4-NNR	PCTM-60-SI-G1
0101 14 80	GUFE12SVITX	4ET4-TTZ	PCTM-60-SI-G2
0101 15 17	GUFE30SVITX	4F12882	PCTM-60-SI-G2
0101 15 17 39	GV6K-U3E	4F2812	PCTM-7-NBR-G1
0101 15 21	GX2N015R0101	4F2882	PCTM-7-NBR-G1
0101 15 21 39	GX4N090R0700	4F3MK4S	PCTM-7-NBR-M5
0101 16 17	GZ06L71	4F3MLOS	PCTM-7-NBR-M5
0101 16 17 39	GZ06LCF	4F3MXS	PCTM-7-SI-G1
0101 16 21	GZ06LCRCF	4F3MXSS	PCTM-7-SI-G1
0101 16 21 39	GZ06LVITCF	4F3P4S	PCTM-7-SI-M5
0101 16 80	GZ06S71	4F3T4S	PCTM-7-SI-M5
0101 16 82	GZ06SCF	4F42EDMLOS	PCTM-90-NBR-G2
0101 18 21	GZ06SVITCF	4F42EDMLOSS	PCTM-90-NBR-G2
0101 18 21 39	GZ08L71	4F42EDMXS	PCTM-90-SI-G2
0101 18 27	GZ08LCF	4F42EDMXSS	PCTM-90-SI-G2
0101 18 27 39	GZ08LNBR71	4F4822	PCV4PK8-1/4
0101 18 82	GZ08LOFF71	4F4M-C4L-1-SS	PCX/CCXCOM3
0101 18 83	GZ08LVITCF	4F4M-C4L-5-SS	PD018PS01SRS5AC00T00A0000
0101 20 27	GZ08S71	4F4OMXS	PD045PB04SRU5AC00R0000000
0101 20 27 39	GZ08SCF	4F4OMXSS	PD05

0101 22 27	GZ08SVITCF	4F5-BV4-SS-BVT-T	PD060PB04SRS5AC00S100PB00
0101 22 27 39	GZ10L71	4F5OMLOS	PD060PC02SRS5AC00S1000000
0101 22 34	GZ10LCF	4F5OMLOSBP	PD060PS02SRS5AAM0E1000000
0101 22 34 39	GZ10LCRCF	4F5OMLOSS	PD060PS02SRS5AAM0S0000000
0101 25 27	GZ10LMS	4F5OMLOSV	PD06216
0101 25 27 39	GZ10LVITCF	4F5OMXS	PD06216
0101 25 34	GZ10S71	4F5OMXSS	PD07334
0101 25 34 39	GZ10SCF	4F5OMXSV	PD07334
0101 28 34	GZ10SVITCF	4F63MXS	PD07335
0101 28 34 39	GZ12L71	4F63MXSS	PD07335
0102 04 00	GZ12LCF	4F63P4S	PD07521
0102 05 00	GZ12LCRCF	4F642EDMLS	PD07521
0102 06 00	GZ12LVITCF	4F642EDMXS	PD07580
0102 08 00	GZ12S71	4F642EDMXSS	PD07580
0102 10 00	GZ12SCF	4F64OMXS	PD07580
0102 12 00	GZ12SVITCF	4F65OMXS	PD07580
0102 14 00	GZ14S71	4F6822	PD07581
0102 15 00	GZ14SCF	4F6MXSS	PD07581
0102 16 00	GZ14SVITCF	4F81226	PD07582
0102 18 00	GZ15L71	4F81626	PD07582
0102 20 00	GZ15LCF	4F8423	PD075PB04SRS5AAN0S0000000
0102 22 00	GZ15LMS	4F8426	PD075PB04SRS5AC00S0000000
0102 25 00	GZ15LVITCF	4F8623	PD075PB04SRS5AL00S0000000
0102 28 00	GZ16S71	4F8626	PD07757
0103 04 10	GZ16SCF	4F8822	PD07757
0103 05 10	GZ16SVITCF	4F8926	PD07765
0103 06 10	GZ18L71	4FA2K-316	PD07765
0103 06 13	GZ18LCF	4FA2N-316	PD08714
0103 08 10	GZ18LNBR71	4FA2R-316	PD08714
0103 08 13	GZ18LVITCF	4FA4GC-316	PD10
0103 08 17	GZ20S71	4FA4K-316	PD100PB04SLS5AC00S1000000
0103 10 13	GZ20SCF	4FA4N-316	PD100PS02SRS5AC10S3000000
0103 10 17	GZ20SVITCF	4FA4N-6MO	PD1-1/4-70
0103 12 13	GZ22L71	4FA4N-825	PD1-1/4-70
0103 12 17	GZ22LCF	4FA4R-316	PD1-1/4-80
0103 14 17	GZ22LMS	4FA4R-M	PD1-1/4-80
0103 14 21	GZ22LVITCF	4FA6N-316	PD13
0103 15 17	GZ25S71	4FA8N-316	PD140PB04SRS5AC00S1000000
0103 15 21	GZ25SCF	4FA8N-825	PD140PS02SRS5AC00S1000000
0103 16 17	GZ25SVITCF	4FA8N-HC	PD-1-5MM
0103 16 21	GZ28L71	4F-B6LJ2-BN-SSP	PD17
0103 18 21	GZ28LCF	4F-B6LJ2-BP	PD20600
0103 18 27	GZ28LVITCF	4F-B6LJ2-BP-C3	PD20600
0103 20 27	GZ30S71	4F-B6LJ2-EPR-SSP	PD20601
0103 22 27	GZ30SCF	4F-B6LJ2-SSP	PD20601
0104 04 00	GZ30SVITCF	4F-B6LJ2-V-SSP	PD20690-0100
0104 05 00	GZ35L71	4F-B6LJ-BN-SSP	PD20690-0100
0104 06 00	GZ35LCF	4F-B6LJ-BP	PD20692-0100
0104 08 00	GZ35LVITCF	4F-B6LJ-SSP	PD20692-0100
0104 10 00	GZ38S71	4F-B6LJ-SSP-C3	PD20692-0160
0104 12 00	GZ38SCF	4F-B6LJ-V-BP	PD20692-0160
0104 14 00	GZ38SVITCF	4F-B6LJ-V-SSP	PD20693-1250
0104 15 00	GZ42L71	4F-B6XJ2-BN-SSP	PD20693-1250

0104 16 00	GZ42LCF	4F-B6XJ2-BP	PD20694-0450
0104 18 00	GZ42LVITCF	4F-B6XJ2-BP-C3	PD20694-0450
0104 20 00	GZR06L/06S71	4F-B6XJ2-SSP	PD20694-0700
0104 22 00	GZR06L/06SCF	4F-B6XJ2-V-SSP	PD20694-0700
0104 25 00	GZR06L/06SVITCF	4F-B6XJ-BP	PD20699
0104 28 00	GZR08/06L71	4F-B6XJ-EPR-SSP	PD20699
0105 04 10	GZR08/06LCF	4F-B6XJ-SSP	PD20700
0105 05 10	GZR08/06LVITCF	4F-B6XJ-V-BP	PD20700
0105 05 13	GZR08/06S71	4F-B6XS2-BN-SSP	PD20701
0105 06 10	GZR08/06SCF	4F-B6XS2-SSP	PD20701
0105 06 11	GZR08/06SVITCF	4F-B6XS2-SSP-C3	PD20702
0105 06 13	GZR08L/08S71	4F-B6XS2-V-SSP	PD20702
0105 06 14	GZR08L/08SCF	4FBC2N-316	PD20703
0105 06 17	GZR08L/08SVITCF	4FBC2N-B	PD20703
0105 08 10	GZR10/06L71	4FBC4N-316	PD20704
0105 08 11	GZR10/06LCF	4FBC4N-6MO	PD20704
0105 08 11 55	GZR10/06LVITCF	4FBC4N-825	PD20705
0105 08 13	GZR10/06S71	4FBC4N-B	PD20705
0105 08 14	GZR10/06SCF	4FBC4N-IIY	PD20706
0105 08 14 55	GZR10/08L71	4FBC4N-NNR	PD20706
0105 08 17	GZR10/08LCF	4FBT2N-316	PD20707
0105 10 10	GZR10/08LVITCF	4FBT2N-M	PD20707
0105 10 13	GZR10/08S71	4FBT4K-316	PD20708
0105 10 14	GZR10/08SCF	4FBT4N-316	PD20708
0105 10 17	GZR10/08SVITCF	4FBT4N-6MO	PD20709
0105 10 18	GZR10L/08SVITCF	4FBT4N-B	PD20709
0105 10 18 55	GZR10L/10S71	4FBT4N-IIY	PD20735
0105 10 21	GZR10L/10SCF	4F-C4L-1/3-B	PD20735
0105 10 22	GZR10L/10SVITCF	4F-C4L-1/3-BN-B	PD20741-0030
0105 12 13	GZR12/06L71	4F-C4L-1/3-BN-SS	PD20741-0030
0105 12 17	GZR12/06LCF	4F-C4L-1/3-EPR-SS	PD20846
0105 12 21	GZR12/06LVITCF	4F-C4L-1/3-SS	PD20846
0105 14 13	GZR12/06S71	4F-C4L-100-B	PD21
0105 14 17	GZR12/06SCF	4F-C4L-100-BN-B	PD21023-0370
0105 14 18 55	GZR12/08L71	4F-C4L-100-SS	PD21023-0370
0105 14 21	GZR12/08LCF	4F-C4L-10-B	PD21033-0080
0105 14 27	GZR12/08LVITCF	4F-C4L-10-BN-SS	PD21033-0080
0105 15 17	GZR12/08S71	4F-C4L-10-EPR-B	PD21033-0100
0105 15 21	GZR12/08SCF	4F-C4L-10-EPR-SS	PD21033-0100
0105 16 13	GZR12/10L71	4F-C4L-10-SS	PD21033-0150
0105 16 17	GZR12/10LCF	4F-C4L-10-SS-C3	PD21033-0150
0105 16 21	GZR12/10LVITCF	4F-C4L-1-B	PD21060-0200
0105 16 27	GZR12/10S71	4F-C4L-1-B-C3	PD21060-0200
0105 18 21	GZR12/10SCF	4F-C4L-1-BN-B	PD21061-0200
0105 18 27	GZR12/10SVITCF	4F-C4L-1-BN-SS	PD21061-0200
0105 20 21	GZR12L/12S71	4F-C4L-1-EPR-B	PD21219
0105 20 27	GZR12L/12SCF	4F-C4L-1-EPR-SS	PD21219
0105 22 21	GZR12L/12SVITCF	4F-C4L-1-SS	PD21220
0105 22 27	GZR14/12SCF	4F-C4L-1-SS-C3	PD21220
0105 22 34	GZR14S/12LCF	4F-C4L-25-BN-SS	PD21230
0105 25 27	GZR15/08L71	4F-C4L-25-EPR-SS	PD21230
0105 25 34	GZR15/08LCF	4F-C4L-25-SS	PD21231
0105 28 27	GZR15/08LVITCF	4F-C4L-50-B	PD21231

0105 28 34	GZR15/10L71	4F-C4L-50-EPR-SS	PD21233
0106 04 00	GZR15/10LCF	4F-C4L-50-SS	PD21233
0106 05 00	GZR15/10LVITCF	4F-C4L-5-B	PD21235
0106 06 00	GZR15/12L71	4F-C4L-5-B-C3	PD21235
0106 08 00	GZR15/12LCF	4F-C4L-5-BN-B	PD21236
0106 10 00	GZR15/12LVITCF	4F-C4L-5-BN-SS	PD21236
0106 12 00	GZR15L/12SCF	4F-C4L-5-EPR-B	PD21237
0106 14 00	GZR16/10S71	4F-C4L-5-EPR-SS	PD21237
0106 15 00	GZR16/10SCF	4F-C4L-5-SS	PD21238
0106 16 00	GZR16/10SVITCF	4F-C4L-75-B	PD21238
0106 18 00	GZR16/12S71	4F-C4L-75-SS	PD21239
0106 20 00	GZR16/12SCF	4F-CO4L-1/3-BN-SS	PD21239
0106 22 00	GZR16/12SVITCF	4F-CO4L-1/3-V-SS	PD21241
0106 25 00	GZR16/14SCF	4F-CO4L-10-KZ-SS	PD21241
0106 28 00	GZR16S/10LCF	4F-CO4L-10-V-SS	PD21288-0200
0107 04 00	GZR16S/12LCF	4F-CO4L-1-BN-SS	PD21288-0200
0107 05 00	GZR16S/15L71	4F-CO4L-1-KZ-SS	PD21288-0250
0107 06 00	GZR16S/15LCF	4F-CO4L-1-V-SS	PD21288-0250
0107 08 00	GZR16S/15LVITCF	4F-CO4L-1-V-SS-C3	PD21288-0400
0107 10 00	GZR18/10L71	4F-CO4L-25-KZ-SS	PD21288-0400
0107 12 00	GZR18/10LCF	4F-CO4L-25-V-SS	PD21293
0107 14 00	GZR18/10LCRCF	4F-CO4L-50-KZ-SS	PD21293
0107 15 00	GZR18/12L71	4F-CO4L-50-V-SS	PD21311
0107 16 00	GZR18/12LCF	4F-CO4L-5-KZ-SS	PD21311
0107 18 00	GZR18/12LVITCF	4F-CO4L-5-V-SS	PD21312
0107 22 00	GZR18/15L71	4FEL2N-316	PD21312
0107 25 00	GZR18/15LCF	4FEL2N-B	PD21313
0107-12-12	GZR18/15LVITCF	4FEL2N-M	PD21313
0107-12-16	GZR18L/16S71	4FEL4N-316	PD21318-0160
0107-12-8	GZR18L/16SCF	4FEL4N-6MO	PD21318-0160
0107-16-12	GZR18L/16SVITCF	4FEL4N-B	PD21318-0250
0107-16-16	GZR20/12S71	4FEL4N-IIY	PD21318-0250
0107-16-20	GZR20/12SCF	4FEL4N-M	PD21319-1250
0107-20-20	GZR20/16S71	4FEL4N-NNR	PD21319-1250
0107-2-2	GZR20/16SCF	4FEL6N-316	PD21320-0700
0107-2-4	GZR20/16SVITCF	4FEL6N-6MO	PD21320-0700
0107-24-24	GZR20S/18L71	4FEL8N-316	PD21415
0107-32-32	GZR20S/18LCF	4FEL8N-B	PD21415
01074-10-A45S	GZR22/12L71	4FF4-316	PD21415
01074-10-B45S	GZR22/12LCF	4FF4-625	PD21415
01074-10-C45S	GZR22/12LVITCF	4FF4-6MO	PD21416
01074-10-D45S	GZR22/15L71	4FF4-6MO-NC	PD21416
0107-4-4	GZR22/15LCF	4FF4-825	PD21416
0107-4-6	GZR22/15LVITCF	4FF4-B	PD21416
0107-4-8	GZR22/18L71	4FF4-HC	PD21417
0107-6-4	GZR22/18LCF	4F-F4L-100-B	PD21417
0107-6-6	GZR22/18LVITCF	4F-F4L-100-BN-B	PD21417
0107-6-6-SS	GZR22L/20S71	4F-F4L-100-SS	PD21417
0107-6-8	GZR22L/20SCF	4F-F4L-10-B	PD21418
0107-8-12	GZR22L/20SVITCF	4F-F4L-10-BN-B	PD21418
0107-8-6	GZR25/16S71	4F-F4L-10-EPR-SS	PD21418
0107-8-8	GZR25/16SCF	4F-F4L-10-SS	PD21418
0108 04 10	GZR25/16SVITCF	4F-F4L-1-B	PD21419

0108 05 10	GZR25/20S71	4F-F4L-1-BN-B	PD21419
0108 06 10	GZR25/20SCF	4F-F4L-1-EPR-SS	PD21419
0108 06 13	GZR25/20SVITCF	4F-F4L-1-SS	PD21419
0108 08 10	GZR25S/22LCF	4F-F4L-250-SS	PD21420
0108 08 13	GZR28/15L71	4F-F4L-450-B	PD21420
0108 08 17	GZR28/15LCF	4F-F4L-50-B	PD21420
0108 10 13	GZR28/15LVITCF	4F-F4L-50-BN-B	PD21420
0108 10 17	GZR28/18L71	4F-F4L-50-EPR-SS	PD21631-0250
0108 12 13	GZR28/18LCF	4F-F4L-50-SS	PD21631-0250
0108 12 17	GZR28/18LVITCF	4F-F4L-5-B	PD21711-0200
0108 14 17	GZR28/22L71	4F-F4L-5-BN-B	PD21711-0200
0108 14 21	GZR28/22LCF	4F-F4L-5-EPR-SS	PD21711-0220
0108 15 17	GZR28/22LVITCF	4F-F4L-5-SS	PD21711-0220
0108 15 21	GZR28L/25S71	4FF4-M	PD21711-0600
0108 16 17	GZR28L/25SCF	4FF4-T	PD21711-0600
0108 16 21	GZR28L/25SVITCF	4FF4-TI	PD21711-0720
0108 18 21	GZR30/16S71	4F-FT4-100-BN-SS	PD21711-0720
0108 18 27	GZR30/16SCF	4F-FT4-100-SS	PD21711-0750
0108 20 27	GZR30/20S71	4F-FT4-10-BN-SS	PD21711-0750
0108 22 27	GZR30/20SCF	4F-FT4-10-SS	PD21719
0108 22 34	GZR30/25S71	4F-FT4-1-EPR-SS	PD21719
0109 04 10	GZR30/25SCF	4F-FT4-1-SS	PD21719-0080
0109 04 13	GZR30/25SVITCF	4F-FT4-250-EPR-SS	PD21719-0080
0109 05 10	GZR30S/28L71	4F-FT4-250-KZ-SS	PD21750-0075
0109 05 13	GZR30S/28LCF	4F-FT4-250-SS	PD21750-0075
0109 06 10	GZR35/18L71	4F-FT4-50-BN-SS	PD21750-0475
0109 06 11	GZR35/18LCF	4F-FT4-50-SS	PD21750-0475
0109 06 13	GZR35/18LVITCF	4F-FT4-5-EPR-SS	PD21750-0653
0109 06 14	GZR35/22L71	4F-FT4-5-SS	PD21750-0653
0109 08 10	GZR35/22LCF	4F-HB4XK-BN-SSP	PD21753-0475
0109 08 11	GZR35/22LVITCF	4F-HB4XK-SSP	PD21753-0475
0109 08 11 55	GZR35/28L71	4F-HB4XPKR-BN-SSP	PD21830
0109 08 13	GZR35/28LCF	4F-HB4XPKR-SSP	PD21830
0109 08 14	GZR35/28LVITCF	4F-LC12L-SS	PD21872-0250
0109 08 14 55	GZR35L/25SCF	4F-LC6L-SS	PD21872-0250
0109 08 17	GZR35L/30SCF	4FL-HB4XPKR-SSP	PD21872-0600
0109 10 13	GZR35L/30SVITCF	4F-MB6APFA-BP	PD21872-0600
0109 10 14	GZR38/20S71	4F-MB6APFA-SSP	PD21872-0700
0109 10 14 55	GZR38/20SCF	4F-MB6APFA-SSP-C3	PD21872-0700
0109 10 17	GZR38/25S71	4F-MB6LPFA-BP	PD21872-0700
0109 10 18 55	GZR38/25SCF	4F-MB6LPFA-SSP	PD21872-0700
0109 10 21	GZR38/25SVITCF	4F-MB6LPFA-SSP-C3	PD21910
0109 12 13	GZR38/30S71	4F-MB6XPFA-BP	PD21910
0109 12 17	GZR38/30SCF	4F-MB6XPFA-SSP	PD21911
0109 12 21	GZR38/30SVITCF	4F-MB6XPFA-SSP-C3	PD21911
0109 14 17	GZR38S/35LCF	4FMK4S	PD21912
0109 14 18 55	GZR42/22L71	4F-MPBLPK-V-SSP	PD21912
0109 14 21	GZR42/22LCF	4F-MPNLB-T-SS	PD21913
0109 14 22 55	GZR42/22LVITCF	4FMTXB	PD21913
0109 15 17	GZR42/28L71	4FMTXS	PD21913
0109 15 21	GZR42/28LCF	4FMTXSS	PD21913
0109 16 17	GZR42/28LVITCF	4FNMK4S	PD21914
0109 16 21	GZR42/35L71	4FNMK4SS	PD21914

0109 16 27	GZR42/35LCF	4FNMKAS	PD21915
0109 18 21	GZR42/35LVITCF	4FNMLS	PD21915
0109 18 27	GZR42L/38S71	4FNMLSS	PD21916
0109 20 21	GZR42L/38SCF	4FNMTXS	PD21916
0109 20 27	GZR42L/38SVITCF	4FNMTXSS	PD21917
0109 22 27	H00153-010	4F-NP6AK-SSP	PD21917
0109 22 34	H00153-011	4F-NP6AR-EPR-SSP	PD22001-0220
0109 25 27	H00153-013	4F-NP6AR-G-SSP	PD22001-0220
0109 25 34	H00153-017	4F-NP6AR-SSP	PD22001-0250
0109 28 27	H00153-047	4F-NP6LK-SSP	PD22001-0250
0109 28 34	H00153-054	4F-NP6LR-G-SSP	PD22001-0297
0110 04 00	H00153-057	4F-NP6LR-G-SSP-C3	PD22001-0297
0110 04 00 40	H00279001	4F-NP6LR-SSP	PD22001-0300
0110 04 00 60	H00279002	4F-NP6LR-SSP-C3	PD22001-0300
0110 04 00 70	H00279003	4F-PG4L-SS	PD22001-0500
0110 05 00	H00279-011	4F-PR4-BNT-B	PD22001-0500
0110 05 00 40	H00361-006	4F-PR4-BNT-SS	PD22002
0110 06 00	H00361-009	4F-PR4-EPRT-SS	PD22002
0110 06 00 40	H00361-010	4F-PR4-VT-B	PD22008-0900
0110 06 00 60	H00361-012	4F-PR4-VT-SS	PD22008-0900
0110 06 00 70	H00361-026	4F-PR4-VT-SS-C3	PD22009-1400
0110 08 00	H00361-037	4F-PR6-BNT-SS	PD22009-1400
0110 08 00 40	H00361-047	4F-PR6-VT-B	PD22010
0110 08 00 60	H00361-050	4F-PR6-VT-SS	PD22010
0110 08 00 70	H00361-055	4F-RH4A-BNT-SS-K4	PD22011
0110 10 00	H004C-11	4F-RH4A-BNT-SS-K6	PD22011
0110 10 00 40	H004D-11	4FRT2N-316	PD22011
0110 10 00 60	H005X-3	4FRT4N-316	PD22011
0110 10 00 70	H00602-009	4FRT4N-6MO	PD22014-0033
0110 12 00	H00602-017	4FRT4N-B	PD22014-0033
0110 12 00 40	H00602-018	4F-SC1000D-SS	PD22014-0300
0110 12 00 60	H-0071	4F-SC1000D-SS-TPED	PD22014-0300
0110 14 00	H00812	4FSC12N-316	PD22014-0600
0110 14 00 70	H00834001	4F-SC150D-SS	PD22014-0600
0110 15 00	H00834002	4F-SC150D-SS-TPED	PD22014-0750
0110 15 00 40	H00834003	4F-SC2250D-SS-WC	PD22014-0750
0110 15 00 60	H00834004	4FSC2GC-316	PD22014-0850
0110 16 00	H00834005	4FSC2K-316	PD22014-0850
0110 16 00 40	H00834-006	4FSC2N-316	PD22014-1000
0110 16 00 60	H00834-007	4FSC2N-6MO	PD22014-1000
0110 18 00	H00834-009	4FSC2N-B	PD22014-1010
0110 18 00 40	H00835-001	4FSC2N-M	PD22014-1010
0110 20 00	H00SP-1156	4F-SC300D-SS	PD22015
0110 22 00	H021-11	4F-SC300D-SS-TPED	PD22015
0110 22 00 40	H022-13	4FSC4GC-316	PD22017
0110 25 00	H022C-11	4FSC4K-316	PD22017
0110 25 00 40	H02713	4FSC4K-6MO	PD22021-0108
0110 25 00 60	H02713	4FSC4K-M	PD22021-0108
0110 28 00	H02719	4FSC4N-316	PD22021-0170
011066-6	H02719	4FSC4N-6MO	PD22021-0170
0111 04 00	H02722	4FSC4N-825	PD22021-0350
0111 05 00	H02722	4FSC4N-B	PD22021-0350
0111 06 00	H-0304	4FSC4N-IIY	PD22021-0460

0111 08 00	H-0336	4FSC4N-M	PD22021-0460
0111 10 00	H-0360	4FSC4N-NNR	PD22021-1500
0111 12 00	H037A-11	4FSC4R-316	PD22021-1500
0111 14 00	H-0380	4F-SC500D-SS	PD22021-2400
0111 15 00	H041B-11	4F-SC500D-SS-TPED	PD22021-2400
0111 16 00	H054B-11	4F-SC50D-SS	PD22023
0112 04 00	H054C-11	4FSC6GC-316	PD22023
0112 06 00	H06-1016	4FSC6K-316	PD22026
0112 08 00	H06-1039	4FSC6K-NNR	PD22026
0112 10 00	H06-1040	4FSC6N-316	PD22034
0112 12 00	H06-1044	4FSC6N-B	PD22034
0112.034-01	H06-1053	4FSC6N-M	PD22034
0112.034-02	H06-1066	4FSC6R-316	PD22034
0113 04 00	H061-11	4F-SC75D-SS	PD22035
0113 06 00	H06-1132	4FSC8GC-316	PD22035
0113 08 00	H06-1227	4FSC8GC-M	PD22035
0113 10 00	H06-1274	4FSC8GC-NNR	PD22035
0113 12 00	H06-1462	4FSC8K-316	PD22188
0113 14 00	H06-1518	4FSC8N-316	PD22188
0114 04 10	H06-1571	4FSC8N-6MO	PD222
0114 04 13	H06-1592	4FSC8N-B	PD22311
0114 05 10	H06-1619	4FSC8N-IIY	PD22311
0114 05 13	H06-1633	4FSC8N-M	PD22312
0114 06 10	H06-1667	4FSC8N-NNR	PD22312
0114 06 13	H06-1668	4FSC8R-316	PD22312
0114 06 17	H06-1669	4F-SN6LK-SS	PD22312
0114 08 10	H06-1673	4F-SN6LK-SS-C3	PD22324-0100
0114 08 13	H06-1675	4F-SN6LR-G-SS	PD22324-0100
0114 08 17	H06-1676	4F-SN6LR-SS	PD22416-0250
0114 10 13	H06-1678	4F-SN6LR-SS-C3	PD22416-0250
0114 10 17	H06-1680	4F-SWB4L-RT-V-SS	PD22465
0114 10 21	H06-1686	4F-U12LB-G-SS-HT	PD22465
0114 12 13	H06-1695	4F-U12LB-T-SS	PD22466
0114 12 17	H06-504	4F-U12LR-G-SS	PD22466
0114 12 21	H06-504V	4F-U12LR-G-SS-HT	PD22543
0114 14 13	H06-626	4F-U12LR-T-SS	PD22543
0114 14 17	H06-648	4F-U6LB-G-SS-HT	PD22544
0114 14 21	H06-648V	4F-U6LB-T-SS	PD22544
0114 15 17	H06-711	4F-U6LB-T-SS-C3	PD22569
0114 15 21	H06-764	4F-U6LR-G-SS	PD22569
0114 16 13	H06-794	4F-U6LR-G-SS-HT	PD22570
0114 16 17	H06-886	4F-U6LR-T-SS	PD22570
0114 16 21	H06-894	4F-U6LR-T-SS-C3	PD22580
0114 18 17	H06AS-882	4F-V6AK-B	PD22580
0114 18 21	H06DO-1291	4F-V6AN-B	PD22586
0114 18 27	H06DO-1291V	4F-V6AN-SS	PD22586
0114 20 17	H06DU-1443	4F-V6AR-SS	PD22587
0114 20 21	H06DU-1445	4F-V6AR-V-SS	PD22587
0114 20 27	H06DU-1446	4F-V6LK-B	PD22598
0114 22 27	H06DU-777	4F-V6LK-B-C3	PD22598
0114 25 27	H06DU-814	4F-V6LK-B-OXY	PD22598
0114 56 17	H06DU-826	4F-V6LK-SS	PD22598
0116 04 00	H06DU-857	4F-V6LK-SS-C3	PD22599

0116 05 00	H06DU-959	4F-V6LK-V-SS	PD22599
0116 06 00	H06DU-960	4F-V6LN-B	PD22605-0015
0116 08 00	H06PSB-993	4F-V6LN-SS	PD22605-0015
0116 10 00	H06PSB-994	4F-V6LN-SS-C3	PD22605-0100HB
0116 12 00	H06SCPSD-1602	4F-V6LN-V-SS	PD22605-0100HB
0116 14 00	H06SCPSD-1603	4F-V6LQ-11AC-SS	PD22605-0160
0116 15 00	H06SCPSD-1632	4F-V6LQ-BP	PD22605-0160
0116 16 00	H06SD-1514	4F-V6LQ-SSP	PD22605-0200
0116 18 00	H06SD-1652	4F-V6LR-B	PD22605-0200
0116 20 00	H06SD-1652-C1	4F-V6LR-BN-SS	PD22605-0381
0116 22 00	H06SDV	4F-V6LR-EPR-SS	PD22605-0381
0116 25 00	H06VB-1097	4F-V6LR-SS	PD22605-0400
0117 00 10	H06VB-1272	4G3P4S	PD22605-0400
0117 00 13	H06VB-1316	4G4MXS	PD22605-0800
0117 00 17	H06VB-1381	4G4MXSS	PD22605-0800
0117 00 19	H06VB-1502-S30	4G63P4S	PD22605-1200
0117 00 21	H06VB211-1413	4G6MXS	PD22605-1200
0117 00 27	H06VB-593	4GMTXSS	PD22605-2200
0117 00 34	H06VB-615	4GR	PD22605-2200
0117 00 42	H06VB-769	4H6MK4S	PD22617-0225
0117 00 49	H06VB-938	4H6MK4SS	PD22617-0225
0118 04 10	H06VB-938V	4HMK4S	PD22617-0320
0118 04 10 39	H06VMY-1350	4HMK4SS	PD22617-0320
0118 05 10	H06VMY-1412	4HMLOS	PD22618-0320
0118 05 10 39	H06WV-1420	4HMLOSS	PD22618-0320
0118 05 13	H06WV-1420-NVH	4HMP4SS	PD22621-0320
0118 05 13 39	H06WV-1421	4HMTXB	PD22621-0320
0118 06 10	H06WV-1444	4HMTXSS	PD22623
0118 06 10 39	H06WV-1454	4HMX6SS	PD22623
0118 06 13	H06WV-1511	4HP46S	PD22625
0118 06 13 39	H06WV-1516	4HP4S	PD22625
0118 08 10	H06WV-1548	4I-3941	PD22626
0118 08 10 39	H06WV-1575	4J6MK4S	PD22626
0118 08 13	H06WV-1578	4JMK4S	PD22626
0118 08 13 39	H06WV-1594W120	4JMK4SS	PD22626
0118 08 17	H06WV-1601	4JMLOS	PD22627
0118 08 17 39	H06WV-1627	4JMLOSBP	PD22627
0118 10 13	H06WV-964G024	4JMLOSS	PD22628
0118 10 13 39	H070A-11	4JMTXS	PD22628
0118 10 17	H081-11	4JMTXSS	PD22629
0118 10 17 39	H082-11	4JMX6SS	PD22629
0118 12 13	H083-11	4K PH-SS	PD22681-0800
0118 12 13 39	H084-11	4K-4 RA-B	PD22681-0800
0118 12 17	H085-11	4K-4 RA-SS	PD22692
0118 12 17 39	H1/271X	4KF-C4L-50-B	PD22692
0118 14 13	H1/2CF	4KF-C4L-5-SS	PD22704
0118 14 13 39	H1/2VITCF	4M10C87OMLOS	PD22704
0118 14 17	H1/4CF	4M10C87OMXS	PD22704
0118 14 17 39	H1/4CFX	4M10C87OMXSS	PD22704
0118 14 21	H1/8CF	4M10C8OMLOS	PD22705
0118 14 21 39	H10010	4M10C8OMXS	PD22705
0118 15 17	H10010	4M10C8OMXSBP	PD22705
0118 15 21	H10010 V	4M10F682EDMXS	PD22705

0118 15 21 39	H10010 V	4M10F682EDMXSS	PD22706
0118 16 21	H10011	4M10F687OMXS	PD22706
0118 16 21 39	H100-11	4M10F68OMXS	PD22706
0118 18 21	H10-1057	4M10F82EDMLOS	PD22706
0118 18 21 39	H101-11	4M10F82EDMLOSEPDM	PD22707
0118 20 27	H10-1593	4M10F82EDMXS	PD22707
0118 20 27 39	H10-1622	4M10F82EDMXSBP	PD22707
0118 22 27	H10-1637	4M10F82EDMXSS	PD22707
0118 22 27 39	H10-1662	4M10F87OMLOS	PD22708
0119 04 10	H10-1666L	4M10F87OMLOSS	PD22708
0119 04 10 39	H10-1685	4M10F87OMXS	PD22708
0119 05 10 39	H101A-11	4M10F87OMXSCAP	PD22708
0119 06 10	H101B-11	4M10F87OMXSS	PD22709
0119 06 10 39	H101C-11	4M10F8OMXS	PD22709
0119 06 13	H101D-11	4M10RHV82EDMXS	PD22709
0119 06 13 39	H102-11	4M10S87OMXS	PD22709
0119 08 10	H103-11	4M10S8OMXS	PD22724
0119 08 10 39	H10-403	4M128E2	PD22724
0119 08 13	H105-11	4M12C87OMLOS	PD22744
0119 08 13 39	H106-11	4M12C87OMXS	PD22744
0119 08 17	H108A-11	4M12C87OMXSS	PD2-3/8-70
0119 08 17 39	H10DU-1335G024	4M12C8OMLOS	PD2-3/8-70
0119 10 13	H10DU-1495	4M12C8OMXS	PD23003
0119 10 13 39	H10DU-1496	4M12F682EDMLS	PD23003
0119 10 17	H10DU-1497	4M12F687OMLS	PD23003
0119 10 17 39	H10DU-696	4M12F82EDMLOS	PD23003
0119 12 13	H10PSB-995	4M12F82EDMLS	PD23004
0119 12 13 39	H10PSB-996	4M12F82EDMXS	PD23004
0119 12 17	H10SCPSD-1605	4M12F82EDMXSS	PD23004
0119 14 13 39	H10SDV	4M12F87OMLOS	PD23004
0119 14 17	H10VB-1088	4M12F87OMLOSS	PD23005
0119 14 17 39	H10VB-1539	4M12F8OMXS	PD23005
0119 14 21 39	H10VB-603	4M12R87OMLOS	PD23006
0119 15 17 39	H10VB-899	4M12RHZ82EDMLOS	PD23006
0119 15 21 39	H10VM-851	4M12RHZ82EDMLOSCF	PD23006
0119 16 21 39	H10WV-1545	4M12S87OMLOS	PD23006
0119 18 21 39	H10WV-1581	4M12V87OMLOS	PD23007
0119 20 27 39	H10WV-1582	4M12V87OMXS	PD23007
0119 22 27 39	H10WV-1582-V230	4M12V8OMLOS	PD23008
0120 04 10	H10X1VIT71	4M12V8OMXS	PD23008
0120 05 10	H11/2CF	4M14C87OMLOS	PD23011
0120 06 10	H11/4CF	4M14C8OMLOS	PD23011
0120 06 13	H111C2	4M14F682EDMLS	PD23011
0120 08 10	H111C2	4M14F82EDMLOS	PD23011
0120 08 13	H111P3	4M14F87OMLOS	PD23012
0120 08 17	H111P3	4M14F87OMLOS V0894	PD23012
0120 10 13	H112-11	4M14F8OMXS	PD23013
0120 10 17	H119-11	4M16F82EDMLOS	PD23013
0120 10 21	H122-11	4M1SC10-316	PD23013
0120 12 13	H123-11	4M1SC2-316	PD23013
0120 12 17	H124-11	4M1SC4-316	PD23014
0120 12 21	H125-11	4M1SC6-316	PD23014
0120 14 17	H12-56-9	4M1SC8-316	PD23041

0120 14 21	H12-59V	4M28C2	PD23041
0120 15 17	H126-11	4M2SC4-316	PD23047
0120 15 21	H128B-13	4M2TU4-316	PD23047
0120 16 17	H12WXBG2B9000FD	4M3SC2-316	PD23048
0120 16 21	H12WXBG2B9000FD	4M3SC4-316	PD23048
0120 18 21	H12X1.5CF	4M48B2	PD23050
0120 18 27	H131-11	4M48D2	PD23050
0120 20 27	H13580	4M4A-B6LJ2-SSP	PD23052
0120 22 27	H13580	4M4A-B6LJ-SSP	PD23052
0120 22 34	H14X1.571X	4M4A-C4L-1/3-SS	PD23053
0120 25 34	H14X1.5CF	4M4A-C4L-100-BN-SS	PD23053
0120 28 34	H14X1.5CFX	4M4A-C4L-100-SS	PD23095
0121 10 10	H15VXBG0B9D	4M4A-C4L-10-EPR-SS	PD23095
0121 11 10	H15VXBG0B9D	4M4A-C4L-10-SS	PD23174
0121 13 10	H15WXBG2B9000FD	4M4A-C4L-1-SS	PD23174
0121 13 13	H15WXBG2B9000FD	4M4A-C4L-25-SS	PD23248-0100
0121 14 13	H16-1631	4M4A-C4L-50-SS	PD23248-0100
0121 17 10	H16-1644	4M4A-C4L-5-BN-SS	PD23248-0125
0121 17 13	H16-1645	4M4A-C4L-5-SS	PD23248-0125
0121 17 17	H1-62	4M4A-C4L-75-SS	PD23248-0700
0121 17 17 85	H1-62-BSPP	4M4A-CO4L-1/3-KZ-SS	PD23248-0700
0121 18 17	H1-63	4M4A-CO4L-1-EPR-SS	PD23248-0800
0121 21 10	H1-63-BSPP	4M4A-CO4L-1-V-SS	PD23248-0800
0121 21 13	H1-65	4M4A-CO4L-5-KZ-SS	PD23248-1150
0121 21 17	H16-56-9	4M4A-CO4L-5-V-SS	PD23248-1150
0121 21 21	H16-56-9V	4M4A-MB6LPFA-SSP	PD23248-1200
0121 21 21 85	H16-59JF	4M4A-NP6LR-G-SSP	PD23248-1200
0121 22 21	H16-59V	4M4A-NP6LR-SSP	PD23291-1000
0121 27 13	H1-65M	4M4A-NP6LR-SSP-C3	PD23291-1000
0121 27 17	H1-66	4M4A-PR4-BNT-SS	PD23381
0121 27 21	H1-66M	4M4A-PR4-EPRT-SS	PD23381
0121 27 27	H16WXBBL49D	4M4A-PR4-VT-B	PD23382
0121 28 27	H16WXBBL49D	4M4A-PR4-VT-SS	PD23382
0121 34 17	H16WXBG2B9000FD	4M4A-RH4A-BNT-SS	PD23383
0121 34 21	H16WXBG2B9000FD	4M4A-RH4A-BNT-SS-K5	PD23383
0121 34 27	H16X1.571X	4M4A-RH4A-EPRT-SS	PD23384
0121 34 34	H16X1.5CF	4M4A-RH4A-VT-SS	PD23384
0121 42 21	H16X1.5VIT71	4M4A-RH4A-VT-SS-K1	PD23403
0121 42 27	H18X1.5CF	4M4A-RH4A-VT-SS-K2	PD23403
0121 42 34	H1A060ZN	4M4A-RH4A-VT-SS-K4	PD23404
0121 42 42	H1CF	4M4A-RH4A-VT-SS-K6	PD23404
0121.906-02	H1EWXBBL49D	4M4A-RH4A-VT-SS-K7	PD23405
0122 04 04	H1EWXBBL49D	4M4A-RL4A-BNT-SS	PD23405
0122 05 04	H1EWXBG2B9000FD	4M4A-RL4A-EPRT-SS	PD23406
0122 06 04	H1EWXBG2B9000FD	4M4A-RL4A-VT-SS	PD23406
0122 06 07	H1FWX000XXD	4M4A-RL4A-VT-SS-KA	PD23406
0122 08 06	H1FWX000XXD	4M4A-RL4A-VT-SS-KB	PD23406
0122 08 07	H1PTF1/8-27L43	4M4A-RL4A-VT-SS-KC	PD23407
0122 08 10	H1PTF1/8-27L65	4M4A-RL4A-VT-SS-KD	PD23407
0122 10 07	H1-R1/8"(6252.0025)	4M4A-RL4A-VT-SS-MN	PD23407
0122 10 10	H20-56-9	4M4A-RL4A-VT-SS-MN-KB	PD23407
0122 12 10	H20X1.5CFX	4M4A-V4AN-B	PD23408
0122 12 13	H222P3	4M4A-V4AN-SS	PD23408

0122 14 13	H222P3	4M4A-V4AR-SS	PD23409
0122 14 16	H22VXBG0B9D	4M4A-V4LK-SS	PD23409
0122 15 13	H22VXBG0B9D	4M4A-V4LN-B	PD23410
0122 15 16	H22WXBBL49C	4M4A-V4LN-BN-B	PD23410
0122 16 13	H22WXBBL49C	4M4A-V4LN-BN-SS	PD23412
0122 16 16	H22X1.5CF	4M4A-V4LN-SS	PD23412
0122 18 16	H24-55V	4M4A-V4LN-V-SS	PD23412
0122 18 19	H24-59V	4M4A-V4LR-B	PD23412
0122 20 16	H2-62	4M4A-V4LR-SS	PD23413
0122 20 19	H2-62-BSPP	4M4F-B6LJ2-SSP	PD23413
0122 22 19	H2-63	4M4F-B6LJ2-V-SSP	PD23413
0122 25 19	H2-63-BSPP	4M4F-B6LJ-SSP	PD23413
0122 25 25	H2-65	4M4F-C4L-10-SS	PD23414
0122 28 25	H2-65M	4M4F-DT6L-SS-10.4	PD23414
0123 04 10	H2-66	4M4F-NP6AK-SSP	PD23414
0123 06 10	H2-66M	4M4F-NP6AR-SSP	PD23414
0123 07 10	H26X1.5CF	4M4F-NP6LK-SSP	PD23415
0123 07 13	H27X271X	4M4F-NP6LR-BN-SSP	PD23415
0123 07 17	H29-12	4M4F-NP6LR-G-SSP	PD23415
0123 10 10	H29-16	4M4F-NP6LR-SSP	PD23415
0123 10 13	H29-20	4M4F-NP6LR-V-SSP	PD23416
0123 10 17	H29-24	4M4F-PR4-BNT-SS	PD23416
0123 12 17	H29-32	4M4F-PR4-EPRT-SS	PD23417
0123 13 13	H29RH-16	4M4F-PR4-VT-B	PD23417
0123 13 17	H29RH-20	4M4F-PR4-VT-SS	PD23418
0123 13 21	H29RH-24	4M4F-RH4A-BNT-SS	PD23418
0123 16 17	H29ST-12	4M4F-RH4A-BNT-SS-K1	PD23451-0048
0123 16 21	H29ST-16	4M4F-RH4A-BNT-SS-K2	PD23451-0048
0123 16 27	H29ST-20	4M4F-RH4A-BNT-SS-K3	PD23578
0123 19 17	H29ST-24	4M4F-RH4A-BNT-SS-K4	PD23578
0123 19 21	H29ST-32	4M4F-RH4A-BNT-SS-K5	PD23749
0123 19 27	H29TC-12	4M4F-RH4A-BNT-SS-K6	PD23749
0123 25 27	H29TC-16	4M4F-RH4A-BNT-SS-K7	PD23750
0123 25 34	H29TC-20	4M4F-RH4A-EPRT-SS	PD23750
0123 32 34	H29TC-24	4M4F-RH4A-EPRT-SS-K1	PD23785
0124 04 00	H29TC-32	4M4F-RH4A-EPRT-SS-K3	PD23785
0124 04 00 40	H3/471X	4M4F-RH4A-EPRT-SS-K4	PD23806-0115
0124 05 00	H3/4CF	4M4F-RH4A-EPRT-SS-K5	PD23806-0115
0124 05 00 40	H3/4VITCF	4M4F-RH4A-EPRT-SS-K8	PD23830
0124 06 00	H3/871	4M4F-RH4A-EPRT-SS-MN-K2	PD23830
0124 06 00 40	H3/8CF	4M4F-RH4A-EPRT-SS-MN-K3	PD23830
0124 08 00	H3/8CFX	4M4F-RH4A-KZT-SS-K1	PD23830
0124 08 00 40	H31-10	4M4F-RH4A-KZT-SS-K3	PD23843
0124 10 00	H31-12	4M4F-RH4A-KZT-SS-K6	PD23843
0124 10 00 40	H31-16	4M4F-RH4A-VT-SS	PD23844
0124 12 00	H31-4	4M4F-RH4A-VT-SS-C3	PD23844
0124 12 00 40	H31-6	4M4F-RH4A-VT-SS-K1	PD23845
0124 14 00	H31-8	4M4F-RH4A-VT-SS-K2	PD23845
0124 14 00 40	H31ST-10	4M4F-RH4A-VT-SS-K3	PD23845
0124 15 00	H31ST-12	4M4F-RH4A-VT-SS-K3-C3	PD23845
0124 15 00 40	H31ST-16	4M4F-RH4A-VT-SS-K4	PD23846
0124 16 00	H31ST-4	4M4F-RH4A-VT-SS-K4-C3	PD23846
0124 16 00 40	H31ST-6	4M4F-RH4A-VT-SS-K5	PD23847

0124 18 00	H31ST-8	4M4F-RH4A-VT-SS-K5-C3	PD23847
0124 18 00 40	H31TC-10	4M4F-RH4A-VT-SS-K6	PD23848
0124 20 00	H31TC-12	4M4F-RH4A-VT-SS-K6-C3	PD23848
0124 20 00 40	H31TC-16	4M4F-RH4A-VT-SS-K7	PD23848
0124 22 00	H31TC-4	4M4F-RH4A-VT-SS-K8	PD23848
0124 22 00 40	H31TC-6	4M4F-RH4A-VT-SS-MN	PD23849
0124 25 00	H31TC-8	4M4F-RH4A-VT-SS-MN-K2	PD23849
0124 28 00	H31VXBG0B9D	4M4F-RL4A-BNT-SS	PD23849
0125 04 00	H31VXBG0B9D	4M4F-RL4A-BNT-SS-KA	PD23849
0125 06 00	H32-55E	4M4F-RL4A-BNT-SS-KB	PD23850
0125 08 00	H32-55V	4M4F-RL4A-BNT-SS-KC	PD23850
0125 10 00	H32-59E	4M4F-RL4A-BN-T-SS-KD	PD23894
0125 12 00	H32-59V	4M4F-RL4A-BNT-SS-KF	PD23894
0125 14 00	H32WXBG2B9000FD	4M4F-RL4A-BNT-SS-KG	PD23896
0126 04 00	H32WXBG2B9000FD	4M4F-RL4A-BNT-SS-MN	PD23896
0126 05 00	H33X271X	4M4F-RL4A-EPRT-SS	PD23940
0126 06 00	H33X2CF	4M4F-RL4A-EPRT-SS-KD	PD23940
0126 08 00	H3-62	4M4F-RL4A-EPRT-SS-KE	PD23975-0125
0126 10 00	H3-62-BSPP	4M4F-RL4A-EPRT-SS-KF	PD23975-0125
0126 12 00	H3-63	4M4F-RL4A-EPRT-SS-KG	PD23976-0100
0126 14 00	H3-63-BSPP	4M4F-RL4A-EPRT-SS-MN-KA	PD23976-0100
0126 15 00	H3-65	4M4F-RL4A-EPRT-SS-MN-KF	PD23976-0125
0126 16 00	H3-65M	4M4F-RL4A-KZT-SS	PD23976-0125
0126 18 00	H3-66	4M4F-RL4A-KZT-SS-KA	PD23976-0250
0126 20 00	H3-66M	4M4F-RL4A-KZT-SS-KC	PD23976-0250
0126 22 00	H4-56-9	4M4F-RL4A-KZT-SS-MN	PD23977_A-0076
0126 28 00	H4-56-9V	4M4F-RL4A-VT-SS	PD23977_A-0076
0127 04 00	H4-59E	4M4F-RL4A-VT-SS-KA	PD23977-0200
0127 04 27	H4-59V	4M4F-RL4A-VT-SS-KB	PD23977-0200
0127 05 00	H4-62	4M4F-RL4A-VT-SS-KC	PD23978-1200
0127 05 03	H4-62-BSPP	4M4F-RL4A-VT-SS-KD	PD23978-1200
0127 06 00	H4-63	4M4F-RL4A-VT-SS-KE	PD23979-1500
0127 08 00	H4-63-BSPP	4M4F-RL4A-VT-SS-KF	PD23979-1500
0127 08 55	H4-65	4M4F-RL4A-VT-SS-KG	PD23981
0127 10 00	H4-65M	4M4F-RL4A-VT-SS-MN-KC	PD23981
0127 10 07	H4-66	4M4F-RL4A-VT-SS-MN-KD	PD23982
0127 10 75	H4-66M	4M4F-RV6ACK-18-SS	PD23982
0127 12 00	H5010	4M4F-RV6L-18-SS	PD23984
0127 12 08	H5010	4M4F-RV6LCK-18-SS	PD23984
0127 12 09	H5010 V	4M4F-SN6AK-SS	PD23986
0127 14 00	H5010 V	4M4F-SN6AR-G-SS	PD23986
0127 14 11	H5011	4M4F-SN6AR-SS	PD23989-0600
0127 15 12	H5011	4M4F-SN6LK-G-SS	PD23989-0600
0127 16 13	H6-56-9	4M4F-SN6LK-SS	PD23993
0127 18 14	H6-56-9V	4M4F-SN6LR-G-SS	PD23993
0127 20 15	H6-59V	4M4F-SN6LR-SS	PD23993
0127 22 16	H6-62	4M4F-V6LK-SS	PD23993
0127 25 19	H6-62-BSPP	4M4F-V6LN-B	PD23995
0128 04 10 39	H6-63	4M4F-V6LN-SS	PD23995
0128 04 13 39	H6-63-BSPP	4M4F-V6LN-V-SS	PD24027
0128 06 10 39	H6-65	4M4F-V6LR-SS	PD24027
0128 06 13 39	H6-65M	4M4Z-B6LJ-SSP	PD24028
0128 08 10 39	H6-66	4M58B2	PD24028

0128 08 13 39	H6-66M	4M5BT4-316	PD24040
0128 08 17 39	H7510	4M5RT4-316	PD24040
0128 10 13 39	H7510	4M5SEL4-316	PD24042
0128 10 17 39	H7510 V	4M5VEL4-316	PD24042
0128 10 21 39	H7510 V	4M68B2	PD24046
0128 14 17 39	H7511	4M68C2	PD24046
0128 14 21 39	H7511	4M68D2	PD24093
0128 18 21 39	H80I	4M6A-V4LN-SS	PD24093
0128 18 27 39	H8-56-9	4M6A-V4LR-SS	PD24131
0128 22 27 39	H8-56-9V	4M6Z-B6LJ-SSP	PD24131
0128 22 34 39	H8-59A	4M78E2	PD24147
0128 28 34 39	H8-59V	4M812D6	PD24147
013-0003-062-2	H8-62	4M816D6	PD242
0132 06 56	H8-62-BSPP	4M82D1	PD24242-0180
0132 08 56	H8-63	4M84D2	PD24242-0180
0132 10 56	H8-63-BSPP	4M84D3	PD24242-0200
0132 10 60	H8-65	4M84D6	PD24242-0200
0132 14 60	H8-65M	4M86D2	PD24311
0132 14 62	H8-66	4M86D3	PD24311
0132 18 62	H8-66M	4M86D6	PD24312
0132 18 66	H896137	4M89D3	PD24312
0132 22 69	H899770	4M89D6	PD24330
013-200425	H899771	4M98B2	PD24330
0133 56 10 39	H905375-DE	4M98E2	PD24425
0133 56 13 39	H905375-FR	4MA2K-316	PD24425
0133 60 13 39	H905375-GB	4MA2N-316	PD24448
0133 60 17 39	HA1VXBG0G9A	4MA2R-316	PD24448
0133 62 17 39	HA1VXBG0G9A	4MA4K-316	PD24449
0133 62 21 39	HA1WXBG2G9000FA	4MA4N-316	PD24449
0133 66 21 39	HA1WXBG2G9000FA	4MA4N-625	PD24464
0133 66 27 39	HA-255	4MA4N-6MO	PD24464
0133 69 27 39	HA2VXBG0G9A	4MA4N-825	PD24465
0134 56 10	HA2VXBG0G9A	4MA4N-B	PD24465
0134 56 13	HA2VXLG0G9A	4MA4N-B-OXY	PD24467
0134 60 13	HA2VXLG0G9A	4MA4N-HC	PD24467
0134 60 17	HA2WXBG2G9000FA	4MA4N-M	PD24476
0134 62 17	HA2WXBG2G9000FA	4MA4R-316	PD24476
0134 62 21	HA2WXLG2G9000FA	4MA4R-6MO	PD24477
0134 66 21	HA2WXLG2G9000FA	4MA4R-ED-316	PD24477
0134 66 27	HA3WX000XXA	4MA4R-M	PD24641
0134 69 27	HA3WX000XXA	4MA6K-316	PD24641
0135 06 13	HA466461U004	4MA6N-316	PD24642
0135 06 21	HA468030U001	4MA6N-6MO	PD24642
0135 09 13	HA470631U200	4MA6N-B	PD24647
0135 09 21	HA5VXBG0G9A	4MA6R-316	PD24647
0135 10 27	HA5VXBG0G9A	4MA6R-ED-316	PD24690
0136 06 10	HA5WXBG2G9000FA	4MA8K-316	PD24690
0136 06 13	HA5WXBG2G9000FA	4MA8N-316	PD24692
0136 06 17	HA6VXBG0G9A	4MA8N-6MO	PD24692
0136 08 10	HA6VXBG0G9A	4M-B6LJ2-BP	PD24720-0025
0136 08 13	HA6VXLG0G9A	4M-B6LJ2-SSP	PD24720-0025
0136 08 17	HA6VXLG0G9A	4M-B6LJ2-V-SSP	PD24720-0235
0136 10 13	HA6WXBG2G9000FA	4M-B6LJ-BP	PD24720-0235

0136 10 17	HA6WXBG2G9000FA	4M-B6LJ-SSP	PD24720-0470
0136 10 21	HA6WXLG2G9000FA	4M-B6XJ2-SSP	PD24720-0470
0136 12 13	HA6WXLG2G9000FA	4M-B6XJ-SSP	PD24720-0500
0136 12 17	HA7VXBG0G9A	4MBC2N-316	PD24720-0500
0136 12 21	HA7VXBG0G9A	4MBC4N-316	PD24726
0136 14 13	HA7VXLG0G9A	4MBC4N-825	PD24726
0136 14 17	HA7VXLG0G9A	4MBC4N-M	PD24727-0080
0136 14 21	HA7WXBG2G9000FA	4MBC4N-TTZ	PD24727-0080
0136 14 27	HA7WXBG2G9000FA	4MBC6N-316	PD24728
0136 16 17	HA7WXLG2G9000FA	4MBC8K-316	PD24728
0136 16 21	HA7WXLG2G9000FA	4MBC8N-316	PD24729
0136 16 27	HAEVXBG0G9A	4MBT2N-316	PD24729
0137 10 00	HAEVXBG0G9A	4MBT2N-825	PD24790-0030
0137 12 00	HAEVXLG0G9A	4MBT2N-M	PD24790-0030
0137 13 00	HAEVXLG0G9A	4MBT4N-316	PD24790-0050
0137 14 00	HAEWXBG2G9000FA	4MBT4N-6MO	PD24790-0050
0137 16 00	HAEWXBG2G9000FA	4MBT4N-B	PD24792
0137 17 00	HAEWXLG2G9000FA	4MBT4N-M	PD24792
0137 18 00	HAEWXLG2G9000FA	4MBT4R-316	PD24901
0137 20 00	HAFWX000XXA	4M-BV4-SS	PD24901
0137 21 00	HAFWX000XXA	4M-BV4-SS-BVT	PD24902
0137 22 00	HAL6252V	4M-BV4-SS-BVT-T	PD24902
0137 24 00	HAL6MO2V	4M-BV4-SS-T	PD24915
0137 27 00	HALHC2V	4M-C4L-1/3-B	PD24915
0137 30 00	HALM2V	4M-C4L-1/3-BN-SS	PD24918
0137 33 00	HALS2V	4M-C4L-1/3-EPR-SS	PD24918
0137 39 00	HALS2V3	4M-C4L-1/3-SS	PD24924
0137 42 00	HALS2V4N	4M-C4L-100-B	PD24924
0137 45 00	HALS2V4N3	4M-C4L-100-BN-B	PD24990
0137 48 00	HALS2V4N9	4M-C4L-100-BN-SS	PD24990
0137 60 00	HALS2V4NHP	4M-C4L-100-SS	PD24999
0138 06 00	HALS2V4NNC	4M-C4L-10-B	PD24999
0138 08 00	HALS2V8R	4M-C4L-10-BN-SS	PD25006
0138 10 00	HALS2V9	4M-C4L-10-EPR-B	PD25006
0138 12 00	HALS2VATK	4M-C4L-10-EPR-SS	PD25006
0138 13 00	HALS2VHP	4M-C4L-10-SS	PD25006
0138 14 00	HALS2VHP3	4M-C4L-1-B	PD25025
0138 16 00	HALS2VHPNC	4M-C4L-1-BN-B	PD25025
0138 17 00	HALS2VNC	4M-C4L-1-BN-SS	PD25031
0138 18 00	HALS2VOXY	4M-C4L-1-EPR-SS	PD25031
0138 20 00	HALS2VPK	4M-C4L-1-SS	PD25076-0000
0138 21 00	HALT2V	4M-C4L-25-B	PD25076-0000
0138 22 00	HAND06LX	4M-C4L-25-B-C3	PD25076-0200
0138 24 00	HAND22LX	4M-C4L-25-BN-SS	PD25076-0200
0138 26 00	HAND28LX	4M-C4L-25-EPR-B	PD25076-1300
0138 27 00	HAND35LX	4M-C4L-25-EPR-SS	PD25076-1300
0138 30 00	HANDLD10SX	4M-C4L-25-SS	PD25076-6100
0138 33 00	HANDLD16SX	4M-C4L-25-SS-C3	PD25076-6100
0138 36 00	HANDVDHA06SX	4M-C4L-50-B	PD25109
0138 39 00	HANDVDHA25SX	4M-C4L-50-BN-B	PD25109
0138 42 00	HANVS12FFANG	4M-C4L-50-BN-SS	PD25126
0138 45 00	HAP04WV06-1661	4M-C4L-50-EPR-SS	PD25126
0138 48 00	HAP08DU06-1001	4M-C4L-50-SS	PD25133

0138 52 00	HAP08VB06-1199	4M-C4L-5-B	PD25133
0138 60 00	HAP08VM06	4M-C4L-5-BN-B	PD25251
0139 10 00	HAP08WV06-1000	4M-C4L-5-BN-SS	PD25251
0139 13 00	HAP10DU06-1009	4M-C4L-5-EPR-SS	PD25271
0139 17 00	HAP10VB06-1324	4M-C4L-5-SS	PD25271
0139 21 00	HAP10VM06-1325	4M-C4L-75-B	PD25276
0139 27 00	HAP10WV06-1292	4M-C4L-75-BN-SS	PD25276
0139 34 00	HAP10WV06-1322	4M-C4L-75-SS	PD25373
014-01056-0	HAP10WV06-965	4M-CO4L-1/3-V-SS	PD25373
014-01056-004	HAP10WV06-966	4M-CO4L-10-EPR-SS	PD25373
014-01056-01	HAP16-10B1	4M-CO4L-10-V-SS	PD25373
0142 04 00	HAP16VB10-1326	4M-CO4L-1-BN-SS	PD25378
0142 06 00	HAP16VB10A1	4M-CO4L-1-EPR-SS	PD25378
0142 08 00	HAP16VM10A1-1469	4M-CO4L-1-KZ-SS	PD25419
0142 10 00	HAP16WV10-1323	4M-CO4L-1-V-SS	PD25419
0142 12 00	HAP16WV10-1338	4M-CO4L-50-V-SS	PD25432
0142 14 00	HAP16WV10-967	4M-CO4L-5-EPR-SS	PD25432
0142 18 00	HAP16WV10-968	4M-CO4L-5-KZ-SS	PD25434
014-27052-500	HAP25WV16-1327	4M-CO4L-5-V-SS	PD25434
014-27070-500	HAP32WV25-1480	4M-F4L-100-B	PD25457
014-27071-0	HB1VXBG0G9A	4M-F4L-100-BN-B	PD25457
014-27073-000	HB1VXBG0G9A	4M-F4L-100-SS	PD25489
014-27079-000	HB2VXBG0G9A	4M-F4L-10-B	PD25489
014-27081-000	HB2VXBG0G9A	4M-F4L-10-BN-SS	PD25491
014-27083-000	HB2WXBG2G9000FA	4M-F4L-10-B-OXY	PD25491
014-27086-000	HB2WXBG2G9000FA	4M-F4L-10-SS	PD25492
014-27102-000	HB5VXBG0G9A	4M-F4L-1-B	PD25492
0143 10 10	HB5VXBG0G9A	4M-F4L-1-BN-SS	PD25494
0143 13 13	HB5WXBG2G9000FA	4M-F4L-1-SS	PD25494
0143 17 17	HB5WXBG2G9000FA	4M-F4L-450-SS	PD25496
0143 21 21	HB6VXBG0G9A	4M-F4L-50-B	PD25496
0143 27 27	HB6VXBG0G9A	4M-F4L-50-BN-B	PD25497-0775
0144 10 10	HB7VXBG0G9A	4M-F4L-50-BN-SS	PD25497-0775
0144 13 13	HB7VXBG0G9A	4M-F4L-50-SS	PD25497-1000
0144 17 17	HBEVXBG0G9A	4M-F4L-5-B	PD25497-1000
0144 21 21	HBEVXBG0G9A	4M-F4L-5-BN-B	PD25498-0288
0144 27 27	HBEWXBG2G9000FA	4M-F4L-5-BN-SS	PD25498-0288
014-41834-000	HBEWXBG2G9000FA	4M-F4L-5-SS	PD25499
014-41835-000	HBFWX000XXA	4M-FT4-100-SS	PD25499
014-41851-001	HBFWX000XXA	4M-FT4-10-SS	PD25532-0400
014-41898-0	HBMB10	4M-FT4-1-SS	PD25532-0400
014-41915-002	HBMB12	4M-FT4-250-SS	PD25533
014-42010-5	HBMB14	4M-FT4-450-SS	PD25533
014-42010-502	HBMB16	4M-FT4-50-SS	PD25534
014-42345-500	HBMB18	4M-FT4-5-SS	PD25534
014-42347-500	HBMB20	4MM6A-C4L-1-SS	PD25547
014-42349-500	HBMB22	4M-MB6LPFA-BP	PD25547
014-42356-500	HBMB4	4M-MB6LPFA-SSP	PD25555
014-45095-000	HBMB6	4M-NP6AK-BN-SSP	PD25555
014-45111-0	HBMB8	4M-NP6AK-SSP	PD25556
0145 10 10	HBNTSDRPTFE	4M-NP6AR-SSP	PD25556
0145 13 13	HBNTSISPTFE	4M-NP6LK-SSP	PD25557
0145 17 17	HBNTSISPTFE/3HP	4M-NP6LR-BN-SSP	PD25557

0145 21 21	HBNVXBG0G9A	4M-NP6LR-G-SSP	PD25558
0145 27 27	HBNVXBG0G9A	4M-NP6LR-SSP	PD25558
0146 13 13	HBNWXBG2G9000FA	4M-NP6LR-SSP-C3	PD25576-0288
0146 17 17	HBNWXBG2G9000FA	4M-NP6LR-V-SSP	PD25576-0288
0146 21 21	HBPL10/12	4MP7-MPBLPK-V-SSP	PD25576-0400
014-67294-001	HBPL11/14	4MP7-MPBXPKD-V-SSP	PD25576-0400
014-67309-001	HBPL2.7/4	4MP7-MPBXPK-V-SSP	PD25621
014-67394-000	HBPL4/6	4MP7-MPCBL-5-SS	PD25621
014-67410-000	HBPL6/8	4MP7-MPNLB-T-SS	PD25627
014-68117-002	HBPL8/10	4M-PG4L-SS	PD25627
014-68121-002	HBRAB10	4M-PG4L-SS-T	PD25628
014-68139-0	HBRAB12	4M-PR4-BNT-B	PD25628
014-68139-002	HBRAB12-10	4M-PR4-BNT-SS	PD25629
014-68292-000	HBRAB14	4M-PR4-EPRT-SS	PD25629
014-68496-002	HBRAB6	4M-PR4-VT-B	PD25630
014-68497-000	HBRAB8	4M-PR4-VT-SS	PD25630
014-70238-011	HBSNVS28F8F4F	4MRT2N-316	PD25630
014-70269-0	HBSNVS28F8F4FHPP	4MRT2N-6MO	PD25630
014-70269-000	HBSNVS28F8M4F	4MRT2N-B	PD25631
014-70368-0	HBSNVS28F8M4FHP	4MRT4N-316	PD25631
014-70369-0	HBSNVS28M8F4F	4MRT4N-6MO	PD25710
014-70370-0	HBSNVS28M8F4FHP	4MRT4N-B	PD25710
014-70371-0	HBSNVS28MEXT30MM8F4FP	4MRT4R-316	PD25712
014-70471-0	HBV6MO8M	4MRT8N-316	PD25712
014-70471-003	HBVS4M	4MSC12N-316	PD25712
014-70473-003	HBVS4RM	4MSC12N-M	PD25712
014-70505-0	HBVS8M	4MSC12N-NNR	PD25713
014-70666-034	HBZ 10-1/4-SS	4MSC12N-TTZ	PD25713
014-70773-003	HBZ 10-10-SS	4MSC16N-316	PD25714
014-70816-014	HBZ 10-3/8-SS	4MSC1N-316	PD25714
014-70847-0	HBZ 10-6-SS	4MSC1N-B	PD25715
014-70847-004	HBZ 10-8-SS	4MSC2K-316	PD25715
014-70848-0	HBZ 12-1/2-SS	4MSC2K-B	PD25756
014-70848-004	HBZ 12-10-SS	4MSC2N-316	PD25756
014-70863-0	HBZ 12-12-SS	4MSC2N-6MO	PD25758
014-70863-004	HBZ 12-6-SS	4MSC2N-825	PD25758
014-70866-0	HBZ 12-8-SS	4MSC2N-B	PD25760
014-70867-0	HBZ 16-10-SS	4MSC2N-IIY	PD25760
014-70868-0	HBZ 16-12-SS	4MSC2N-M	PD25761
014-70869-0	HBZ 16-16-SS	4MSC2N-NNR	PD25761
014-70870-0	HBZ 20-20-SS	4MSC2N-TTZ	PD25766
014-70871-0	HBZ 25-25-SS	4MSC2R-316	PD25766
014-70872-0	HBZ 3-1/8-SS	4MSC2R-M	PD25766
014-70873-0	HBZ 3-3-SS	4MSC2R-NNR	PD25766
014-70874-0	HBZ 6-1/4-SS	4MSC4BR-316	PD25771
014-70875-0	HBZ 6-3-SS	4MSC4K-316	PD25771
014-70876-0	HBZ 6-4-SS	4MSC4K-6MO	PD25772
014-70877-0	HBZ 6-6-SS	4MSC4K-825	PD25772
014-70878-0	HBZ 8-6-SS	4MSC4K-B	PD25869
014-70878-001	HBZ 8-8-B	4MSC4K-M	PD25869
014-70879-0	HBZ 8-8-SS	4MSC4K-NNR	PD25872
014-70880-0	HCDMS10	4MSC4N-316	PD25872
014-70881-0	HCDMS5	4MSC4N-316L	PD26

014-70882-0	HCFM16W4130DT	4MSC4N-316-OXY	PD26030
014-70883-0	HCFM9W316DT	4MSC4N-6MO	PD26030
014-70883-002	HCFM9W4130DT	4MSC4N-6MONC	PD26059
014-70884-0	HCP-28605	4MSC4N-825	PD26059
014-70886-0	HCS 2-4	4MSC4N-B	PD26060
014-70887-0	HCS 4-6	4MSC4N-B-OXY	PD26060
014-70887-009	HCS 4-7	4MSC4N-IIY	PD26061
014-70888-0	HCS 4-8	4MSC4N-M	PD26061
014-70889-0	HCYB12FFNC-FC	4MSC4N-MNC	PD26132
014-70890-0	HCYB4A-FC	4MSC4N-NNR	PD26132
014-70891-0	HCYB4FF-FC	4MSC4N-TTZ	PD26209-0320
014-70892-0	HCYB4FFHP-ED	4MSC4R-316	PD26209-0320
014-70893-0	HCYB4M4F-FC	4MSC4R-6MO	PD26243-0250
014-70894-0	HCYB4M4FHP-ED	4MSC4R-825	PD26243-0250
014-70895-0	HCYB6A-FC	4MSC4R-B	PD26243-0300
014-70896-0	HCYB6FF-FC	4MSC4R-ED-316	PD26243-0300
014-70916-0	HCYB6FFHP-ED	4MSC4R-IIY	PD26243-0325
014-70921-0	HCYB8A-FC	4MSC4R-TTZ	PD26243-0325
014-70922-0	HCYB8FF-FC	4MSC6K-316	PD26243-0400
014-70923-0	HCYB8FFHP-ED	4MSC6K-6MO	PD26243-0400
014-71059-0	HCYB8M8F-FC	4MSC6K-B	PD26243-0600
014-71073-001	HCYB8M8FHP-ED	4MSC6K-M	PD26243-0600
014-71133-5	HCYBM10A-FC	4MSC6N-316	PD26273-0025
014-71153-5	HCYBM12A-FC	4MSC6N-825	PD26273-0025
014-71251-5	HCYBM6A-FC	4MSC6N-B	PD26273-0250
014-83026-0	HCYD8FF-FC	4MSC6N-IIY	PD26273-0250
014-83027-000	HCYK8FF-FC	4MSC6N-M	PD26273-0265
014-83030-0	HCYKM12A-FC	4MSC6N-NNR	PD26273-0265
014-83030-000	HD630ETR6301	4MSC6N-TTZ	PD26273-0300
014-83099-000	HD630EYR6000	4MSC6R-316	PD26273-0300
014-83232-0	HD6MO2HLH	4MSC6R-6MO	PD26273-0500
014-83294-001	HD6MO5M	4MSC6R-825	PD26273-0500
014-83321-0	HD6MO5MCP	4MSC6R-M	PD26567-0025
014-83329-000	HD840ELR7300	4MSC6R-NNR	PD26567-0025
014-83330-000	HD940EKR6300	4MSC8K-316	PD26567-0030
014-83331-0	HDD15M	4MSC8K-6MO	PD26567-0030
014-83331-000	HDM2HLH	4MSC8K-B	PD26567-0460
014-83340-0	HDM5	4MSC8K-M	PD26567-0460
014-83340-000	HDM5M	4MSC8K-NNR	PD26969
014-83396-000	HDOP01A06B	4MSC8N-316	PD26969
014-83409-002	HDS2EXT	4MSC8N-6MO	PD26995
014-83527-0	HDS2EXT3	4MSC8N-825	PD26995
014-83709-000	HDS2EXT9	4MSC8N-B	PD27059-0100
014-83765-0	HDS2EXTNC	4MSC8N-IIY	PD27059-0100
014-83787-0	HDS2EXTSSB	4MSC8N-M	PD27059-0600
014-83800-0	HDS2HLH	4MSC8N-NNR	PD27059-0600
014-83871-0	HDS2HLH3	4MSC8N-TTZ	PD27060-0100
014-83906-001	HDS2HLH8NBW8T1500	4MSC8R-316	PD27060-0100
014-83908-001	HDS2HLH8NBW8T600	4MSC8R-6MO	PD27060-0125
014-83914-0	HDS2HLH9	4MSC8R-ED-316	PD27060-0125
014-83914-000	HDS2HLHCP	4MSC8R-M	PD27060-0200
014-83914-001	HDS2HLHFF	4MSEL1N-316	PD27060-0200
014-83914-500	HDS2HLHFRCMLME12-4	4MSEL2K-316	PD27060-0500

014-83914-501	HDS2HLHFRCMLME12BRK-4	4MSEL2N-316	PD27060-0500
014-83915-001	HDS2HLHNC	4MSEL2N-6MO	PD27061-0060/036
014-83916-0	HDS2HLHOXY	4MSEL2N-825	PD27061-0060/036
014-83916-000	HDS2HLHPK	4MSEL2N-B	PD27061-0100
014-83916-001	HDS2HLHSSB	4MSEL2N-IIY	PD27061-0100
014-83918-000	HDS3	4MSEL2N-M	PD27061-0135HB
014-83918-001	HDS33	4MSEL2R-316	PD27061-0135HB
014-83919-000	HDS38R	4MSEL4K-316	PD27061-0160
014-83962-0	HDS3DBB	4MSEL4K-825	PD27061-0160
014-83962-001	HDS3EXT	4MSEL4K-B	PD27063-0100
014-93007-0	HDS3EXT3	4MSEL4K-NNR	PD27063-0100
014-93007-001	HDS3EXTNC	4MSEL4N-316	PD27063-0125
014-93040-000	HDS3M	4MSEL4N-6MO	PD27063-0125
014-93041-0	HDS3M3	4MSEL4N-B	PD27063-0170
014-93104-0	HDS3M9	4MSEL4N-IIY	PD27063-0170
014-93128-001	HDS3MCP	4MSEL4N-M	PD27063-0240
014-93138-000	HDS3MCP3	4MSEL4N-NNR	PD27063-0240
014-93194-000	HDS3MDTP	4MSEL4N-TTZ	PD27063-0350
014-93227-001	HDS3MDTP3	4MSEL4R-316	PD27063-0350
014-93244-001	HDS3MDTPNC	4MSEL6K-316	PD27064-0100
014-93245-0	HDS3MDTPOXY	4MSEL6N-316	PD27064-0100
014-93245-001	HDS3MDTPPK	4MSEL6N-6MO	PD27064-0125
014-93246-001	HDS3MDTPSSB	4MSEL6N-825	PD27064-0125
014-93247-001	HDS3MFF	4MSEL6N-B	PD27064-0200
014-93248-001	HDS3MFFSSB	4MSEL6N-IIY	PD27064-0200
014-93265-0	HDS3MNC	4MSEL6N-M	PD27064-0300
014-93265-001	HDS3MOXY	4MSEL6N-NNR	PD27064-0300
014-93359-0	HDS3MPK	4MSEL8K-316	PD27064-0400
014-93360-001	HDS3MSSB	4MSEL8N-316	PD27064-0400
014-93362-001	HDS3NC	4MSEL8N-6MO	PD27064-0435
014-93367-000	HDS3PK	4MSEL8N-825	PD27064-0435
014-93367-001	HDS3SSB	4MSEL8N-B	PD27064-0800
014-93392-0	HDS4FRCMLME12-1	4MSEL8N-IIY	PD27064-0800
014-93393-001	HDS4M	4MSEL8N-M	PD27064-1000
014-93440-0	HDS5	4M-SN6LK-SS	PD27064-1000
014-93519-0	HDS53	4M-SN6LR-G-SS	PD27064-1300
014-93519-001	HDS58NBW8T1500	4M-SN6LR-SS	PD27064-1300
014-93557-000	HDS58NBW8T600	4MTC12N-316	PD27066-0025
014-93567-001	HDS58R	4MTC2N-316	PD27066-0025
014-93596-0	HDS59	4MTC2N-IIY	PD27147
014-93611-022	HDS5CT	4MTC4N-316	PD27147
014-93614-0	HDS5CT3	4MTC4N-825	PD27148
014-93615-0	HDS5CT9	4MTC4N-IIY	PD27148
014-93775-001	HDS5CTNC	4MTC4N-M	PD27150
014-93804-0	HDS5CTOXY	4MTC4N-NNR	PD27150
014-93804-000	HDS5CTSSB	4MTC6N-316	PD27151
014-93804-5	HDS5EXT	4MTC6N-825	PD27151
014-93817-001	HDS5EXT3	4MTC6N-IIY	PD27152
014-93866-0	HDS5EXT9	4MTC6N-M	PD27152
014-93866-001	HDS5EXTNC	4MTC6N-NNR	PD27427
014-93912-001	HDS5EXTSSB	4MTC6N-TTZ	PD27427
014-97044-003	HDS5FRCMLME12ATEQ-1	4MTC8N-316	PD27674
014-97048-000	HDS5FRCMLME12ATEQBRK-1	4MTC8N-825	PD27674

014-97049-000	HDS5M	4M-V4AK-B	PD27693
014-97050-001	HDS5M3	4M-V4AN-B	PD27693
014-97052-0	HDS5M9	4M-V4AN-SS	PD27697
014-97052-000	HDS5MANGBRKSS	4M-V4AR-B	PD27697
014-97053-0	HDS5MCP	4M-V4LCK-SS	PD27701
014-97082-0	HDS5MCP3	4M-V4LK-B	PD27701
014-97082-000	HDS5MCPNC	4M-V4LK-B-C3	PD27727
014-97083-0	HDS5MCPPK	4M-V4LK-SS	PD27727
014-97083-001	HDS5MCPSSB	4M-V4LK-SS-C3	PD27740
014-97085-000	HDS5MFF	4M-V4LN-B	PD27740
014-97101-500	HDS5MFF3	4M-V4LN-EPR-SS	PD27826
014-97103-5	HDS5MFF9	4M-V4LN-SS	PD27826
014-97105-500	HDS5MFFNC	4M-V4LQ-11AC-B	PD27826
014-97149-000	HDS5MNC	4M-V4LQ-11AC-SS	PD27826
014-97149-001	HDS5M-OXY	4M-V4LQ-11AO-B	PD27876
014-97189-000	HDS5MPK	4M-V4LQ-11AO-SS	PD27876
014-97241-000	HDS5MSSB	4M-V4LQ-SSP	PD27876
014-97242-000	HDS5M-UV3-FRCLME12	4M-V4LR-B	PD27876
014-97243-0	HDS5NC	4M-V4LR-B-C3	PD27917
014-97243-000	HDS5OXY	4M-V4LR-SS	PD27917
014-97244-000	HDS5SSB	4MVEL2N-316	PD27917
014-97245-000	HDY055C4032S1	4MVEL4N-316	PD27917
014-97272-000	HDY055C4032S1/BR	4MX128K2	PD27918
014-97302-000	HDY055C4032S1/BR/SRM50	4MX168K2	PD27918
014-97302-001	HDY055C4032S1/SRM50	4MX48K2	PD27976
014-97327-0	HDY070C4044S1	4MX68K2	PD27976
014-97327-001	HDY070C4044S1/BR	4MX98K2	PD27976
014-97338-001	HDY070C4044S1/BR/SRM50	4NU4-316	PD27976
014-97343-001	HDY070E4044S1	4NU4-625	PD27977
014-97380-001	HDY070E4044S1/BR	4NU4-6MO	PD27977
014-97389-0	HDY092C4044S1	4NU4-825	PD27982
014-97394-0	HDY092C4044S1/BR	4NU4-B	PD27982
014-97424-001	HDY092E4044S1	4NU4-HC	PD28027
014-97425-0	HDY092E4044S1/BR	4NU4-M	PD28027
014-97425-001	HDY092E4044S1/BR/SRM50	4NU4-TI	PD28035
014-97462-0	HDY092E4044S1/SRM50	4NUK4-316	PD28035
014-97493-000	HDY115A6064S1	4-P-130	PD28072
014-97518-000	HDY115A6064S1/BR	4-P-147	PD28072
014-97530-0	HDY115A6064S1/SRM50	4-P-161	PD28073
014-97530-001	HDY115A6088S1	4-P-162	PD28073
014-97531-001	HDY115A6088S1/BR	4-P-182	PD28073
014-97532-0	HDY115C6088S1	4P2TU4-316	PD28073
014-97532-001	HDY115C6088S1/BR	4P2TU4-B	PD28074
014-97548-000	HDY115C6088S1/BR/SRM50	4-P-45	PD28074
014-97548-002	HDY115C6088S1/SRM50	4P5ONMSS	PD28074
014-97561-0	HDY115E6088S1	4PAT4	PD28074
014-97574-000	HDY115E6088S1/BR	4PC4-316	PD28075
014-97575-000	HDY115G6088S1	4PC4-HC	PD28075
014-97576-000	HDY115G6088S1/BR	4PC4-M	PD28096
014-97579-0	HDY115G6088S1/BR/SRM50	4PC6-316	PD28096
014-97579-000	HDY142C6088S1	4PC8-316	PD28098-0320
014-97582-000	HDY142C6088S1/BR	4PC8-6MO	PD28098-0320
014-97583-000	HDY142G6088S1	4PH-625	PD28111

014-97584-000	HDY142G6088S1/BR	4PLS N0702	PD28111
014-97584-003	HEFS2LH	4PNMK4S	PD28145
014-97715-000	HEFS2LH3	4PNMK4SS	PD28145
014-97715-001	HEFS2LH8N	4PNMKAS	PD28146
014-97733-000	HEFS2LH8NNC	4PNMLOS	PD28146
014-97740-0	HEFS2LH8NOXY	4PNMTXS	PD28147
014-97745-003	HEFS2LHNC	4PNMTXSS	PD28147
014-97746-003	HEFS2LHSSB	4R PH-SS	PD28198
014-97751-000	HEFS3	4R3MXS	PD28198
014-97757-000	HEFS33	4R-4 RA-B	PD28220-0220
014-97763-000	HEFS38N	4R-4 RA-M	PD28220-0220
014-97763-001	HEFS38N3	4R-4 RA-SS	PD28278-0225
014-97763-028	HEFS38NOXY	4R4OMLOS	PD28278-0225
014-97764-000	HEFS3NC	4R4OMXS	PD28281
014-97765-000	HEFS3OXY	4R4OMXSS	PD28281
014-97766-000	HEFS3SSB	4R6MK4S	PD28282
014-97773-0	HEFS58NCT	4R6MLOS	PD28282
014-97773-000	HEFS58NCT3	4R6MLOSS	PD28304-0200
014-97773-5	HEFS58NCTPK	4R6MXS	PD28304-0200
014-97797-000	HEFS5CT	4RF-B6LJ2-SSP	PD28340
014-97797-002	HEFS5CT3	4RF-C4L-1/3-SS	PD28340
014-97797-003	HEFS5CTHW	4RHDMLOS4BCF	PD28341
014-97798-000	HEFS5CTNC	4RHDMLOS5BCF	PD28341
014-97821-020	HEX0460A	4RHDMLOSCF	PD28595-0500
014-97823-000	HEX0460A	4RHDMTXS0.2BCF	PD28595-0500
014-97829-002	HEX1153	4RHDMTXSCF	PD28597-0500
014-97831-000	HEX1153	4RHV42EDMXSCF	PD28597-0500
014-97831-001	HFP-14625-W5	4RHV5OMXSCF	PD28777
014-97847-000	HFP-22405-OS	4RHZ5OMLOSCF	PD28777
014-97847-002	HFS3	4RHZ5OMXSCF	PD28867
014-97848-000	HFS33	4RU1-316	PD28867
0151 10 10 39	HFS38N	4RU1-B	PD28884
0151 13 13 39	HFS3HW	4RU2-316	PD28884
0151 17 17 39	HFS3SSB	4RU2-B	PD29014
0151 21 21 39	HFS4	4RU2-M	PD29014
0151 27 27 39	HFS5	4RU2-NNR	PD29056
0151 34 34 39	HFS53	4RU2-TTZ	PD29056
0152 10 10	HFS58N	4RU3-316	PD29058
0152 13 13	HFS58N3	4S3MXS	PD29058
0152 17 17	HFS58NOXY	4S4OMLOS	PD29059
0152 21 21	HFS5SSB	4S4OMXS	PD29059
0152 27 27	HG-075	4S4OMXSS	PD29063
0155 10 10	HG-100	4S5OMLOS	PD29063
0155 13 13	HG-125	4S5OMXS	PD29109
0155 17 17	HG-150	4S6MK4S	PD29109
0155 21 21	HG-200	4S6MLOS	PD29168
0155 27 27	HG-350	4S6MXS	PD29168
0156 21 21	HG8X-04	4SC41.0MMOR-316	PD29168
0158 10 10	HG-DN2	4SC4-316	PD29168
0158 13 13	HGLX-06	4SC4-6MO	PD29267-0040
0158 17 17	HGV6MO12	4SC4-6MONC	PD29267-0040
0158 21 21	HGV6MO8	4SC4-825	PD29417-0160
0158 27 27	HGVS12	4SC4-B	PD29417-0160

016-09020-0	HGVS123	4SC4-IIY	PD29417-0370
0163 13 10	HGVS129	4SC4-M	PD29417-0370
0163 17 10	HGVS12NC	4SC4-NNR	PD29417-0390
0163 17 13	HGVS12PM	4SC4-TTZ	PD29417-0390
0163 21 10	HGVS4HP	4-TMG	PD29417-0400
0163 21 13	HGVS8	4TT4MLS	PD29417-0400
0163 21 17	HGVS83	4TT4MLSS	PD29417-0470
0163 27 13	HGVS89	4TT4MXS	PD29417-0470
0163 27 17	HGVS8EXT3	4TT4MXSS	PD29417-0470ATEX
0163 27 21	HGVS8EXT4	4TT8MLS	PD29417-0470ATEX
016-34352-0	HGVS8HP	4TTP4MLS	PD29417-0540
016-37808-0	HGVS8HPNC	4TTP4MXS	PD29417-0540
016-39644-5	HGVS8NC	4TUBC4-316	PD29419
016-39699-0	HGVS8OXY	4TUCM10-316	PD29419
016-39765-0	HGVS8PK	4TUCM3-316	PD29438
016-39775-0	HGVS8PM	4TUCM4-316	PD29438
0164 11 10	HHB20VXX01C	4TUCM6-316	PD29457
0164 14 13	HHB20VXX01C	4TUCM6-B	PD29457
0164 18 17	HID10DS	4TUCM6-NNR	PD29506-0080
0164 22 21	HID10SSPR	4TUEL4-316	PD29506-0080
0164 28 27	HID16DS	4TUHOA4-316	PD29506-0850
016-48562-5	HID16DSR	4TUR1-316	PD29506-0850
0165 04 06	HID16SS	4TUR2-316	PD29546-0040
0165 05 06	HID25DS	4TUR2-B	PD29546-0040
0165 06 06	HID25DSR	4TUR2-NNR	PD29546-0360
0165 06 08	HID25SS	4TUR2-TTZ	PD29546-0360
0165 06 10	HID25SSPR	4TUR3-316	PD29547-0050
0165 08 08	HID25SSR	4TUR4-316	PD29547-0050
0165 08 10	HID2CS/S4	4TUR6-316	PD29547-0320
0165 08 12	HID2DSR	4TUR6-825	PD29547-0320
0165 10 10	HID2SS	4TUR6-NNR	PD29548-0050
0165 10 12	HID2SSP	4TUR8-316	PD29548-0050
0165 10 14	HID35SS	4TUR8-M	PD29548-0100
0165 12 12	HID45SS	4V13D6X3-C	PD29548-0100
0165 12 14	HID45SSPR	4V13F4B3-C	PD29548-0125
0165 14 14	HID5CS/S4	4V13G4X3-C	PD29548-0125
0165 15 16	HID5DSR	4V14D6X3-C	PD29548-0160
0165 16 16	HID5SS	4V14D6X4-C	PD29548-0160
0166 04 05	HID5SSP	4V14D6X5-C	PD29548-0200
0166 04 06	HID75SS	4V14D6X6-C	PD29548-0200
0166 04 08	HID75SSP	4V14D7X3-C	PD29548-0600
0166 04 10	HID75SSPR	4V14D7X6-C	PD29548-0600
0166 04 14	HID8DSR	4V14E6X3-C	PD29549-0080
0166 04 15	HID8SS	4V14E6X4-C	PD29549-0080
0166 05 06	HJ096C6044S1	4V14E6X4MCHA	PD29549-0125
0166 05 08	HJ096C6044S1/BR	4V14E6X5-C	PD29549-0125
0166 06 08	HJ116C6064S1	4V14E6X5MCHA	PD29549-0150
0166 06 10	HJ116C6064S1/SRM50	4V14E7X4-C	PD29549-0150
0166 06 12	HJ116E6088S1	4V14F4B3-C	PD29549-0160
0166 06 14	HJ116E6088S1/BR/SRM50	4V14F4B4-C	PD29549-0160
0166 06 15	HJ116E6088S1/SRM50	4V14G4X3-C	PD29549-0175
0166 06 16	HJ155E8130S1	4V14G4X4-C	PD29549-0175
0166 08 10	HJ155E8130S1/BR/SRM50	4V14G4X6-C	PD29549-0200

0166 08 12	HJ155E8130S1/BR/SRS50	4V14G8X6-C	PD29549-0200
0166 08 14	HJ155G8135S1/FN/BR	4V3MXS	PD29549-0250
0166 08 15	HJ155G8135S1/FN/BR/SRM50	4V3P4S	PD29549-0250
0166 08 16	HKITGRAPHOILSEALS	4V3T4S	PD29549-0360
0166 08 18	HKITPTFESEALS	4V4OMLOS	PD29549-0360
0166 10 12	HL04X	4V4OMXS	PD29549-0410
0166 10 14	HL06X	4V53D6X2-C	PD29549-0410
0166 10 15	HL08-16.4	4V53D6X3-C	PD29549-0520
0166 10 16	HL08X	4V53D7X3-C	PD29549-0520
0166 10 18	HL10X	4V53E6X2-B	PD29549-0730
0166 10 20	HL12X	4V53F4B3-C	PD29549-0730
0166 10 22	HL14X	4V53G4X3-C	PD29550-0050
0166 12 14	HL15X	4V54D6X2-C	PD29550-0050
0166 12 15	HL16X	4V54D6X3-C	PD29550-0080
0166 12 16	HL18X	4V54D6X4-C	PD29550-0080
0166 12 18	HL6252VNC	4V54D6X5-C	PD29550-0350
0166 12 20	HL6MO2HVSDLH	4V54D6X6-C	PD29550-0350
0166 12 22	HL6MO2V	4V54D7X3-C	PD29551-0050
0166 14 16	HL6MO2VNC	4V54D7X6-C	PD29551-0050
0166 14 18	HL6MO3DBB	4V54E6X3-C	PD29551-0200
0166 14 20	HL6MO5M	4V54E6X4-C	PD29551-0200
0166 14 22	HLHC2V	4V54E6X5-C	PD29551-0350
0166 15 18	HLM28M8F4F	4V54E6X6-C	PD29551-0350
0166 15 22	HLM2HVSDLH	4V54E7X3-C	PD29551-0400
0166 16 18	HLM2V	4V54E7X4-C	PD29551-0400
0166 16 20	HLM2VTF	4V54E7X6-C	PD29580-0240/0152EN
0166 16 22	HLM3DBB	4V54F4B3-C	PD29580-0240/0152EN
0166 18 20	HLM5M	4V54F4B4-C	PD29581-0515/0326EN
0166 18 22	HLS28F8M4F	4V54G4X3-C	PD29581-0515/0326EN
0166 18 25	HLS28M8F4F	4V54G4X4-C	PD29631
0166 18 28	HLS28M8F4F3	4V54G4X6-C	PD29631
0166 20 25	HLS28M8F4F9	4V54G8X6-C	PD29631
0166 22 28	HLS28M8F4FHP	4V5OMLOS	PD29631
016-65056-0	HLS28M8F4FHPNC	4V6MLOS	PD29739
016-65059-0	HLS28M8F4FNC	4V-C4L-1/3-SS	PD29739
016-65060-0	HLS28M8F4FPK	4V-C4L-10-SS	PD29833-0240
016-65107-0	HLS28M8RF4F	4V-C4L-1-BN-SS	PD29833-0240
016-65108-0	HLS2EXT	4V-C4L-1-SS	PD29868
016-65109-0	HLS2EXTNC	4V-C4L-1-SS-C3	PD29868
016-65143-0	HLS2HVSDLH	4V-C4L-5-SS	PD29869
016-65144-0	HLS2HVSDLH1/2D3	4V-CO4L-1/3-EPR-SS	PD29869
016-65145-0	HLS2HVSDLH3	4V-CO4L-1/3-KZ-SS	PD29908
016-65197-0	HLS2HVSDLH9	4V-CO4L-1/3-VSS	PD29908
016-65198-0	HLS2HVSDLHNC	4V-CO4L-10-EPR-SS	PD29961
016-65199-0	HLS2V	4V-CO4L-10-KZ-SS	PD29961
016-65200-0	HLS2V1KFMB	4V-CO4L-10-V-SS	PD30037-0500
016-65201-0	HLS2V1KFMB3	4V-CO4L-1-BN-SS	PD30037-0500
016-65202-0	HLS2V1KFMBNC	4V-CO4L-1-EPR-SS	PD30070
016-65202-5	HLS2V2KFMB	4V-CO4L-1-KZ-SS	PD30070
016-65203-0	HLS2V2KFMB3	4V-CO4L-1-V-SS	PD30071
016-65204-0	HLS2V2KFMBNC	4V-CO4L-5-V-SS	PD30071
016-65205-0	HLS2V3	4V-F4L-10-SS	PD30072
016-65206-0	HLS2V4NHP	4V-F4L-1-SS	PD30072

016-65207-0	HLS2V8R	4V-F4L-50-SS	PD30076-0007
016-65208-0	HLS2V8RF8RGF4RF	4VP01-54G12B5	PD30076-0007
016-65267-0	HLS2V9	4WLNMLS	PD30092
016-65269-0	HLS2VAT	4WLNMLSS5	PD30092
016-65270-0	HLS2VHP	4WLNMS	PD30093
016-65271-0	HLS2VHP3	4WMK4WL4NMS	PD30093
016-65272-0	HLS2VHPNC	4WMK4WL4NMSS	PD30095
016-65310-0	HLS2VHW	4WMLOS	PD30095
016-65311-0	HLS2VNC	4WMLOWLNMLSS	PD30096
016-65370-0	HLS2VOXY	4WMTXS	PD30096
016-65371-0	HLS2VPK	4WMTXWLNMB	PD30166
016-65372-0	HLS2VPT	4WMTXWLNMS	PD30166
016-65479-0	HLS2V-RUS	4WMTXWLNMSS	PD30356
0167 10 11	HLS2VTF	4X040L/5-100	PD30356
0167 13 14	HLS2VTF3	4X6TU4-316	PD30413-0320
0167 17 18	HLS2VTF4N	4X6TUM6-316	PD30413-0320
0167 21 22	HLS2VTF8R8R2R	4XABC4-316	PD30425-0100
0167 27 28	HLS2VTF9	4XASC2-316	PD30425-0100
0168 10 19	HLS2VTFHP	4XASC4-316	PD30452
0168 10 19 39	HLS2VTFHW	4XASC4-6MO	PD30452
0168 13 10	HLS2VTFNC	4XASC4-825	PD30454
0168 13 10 39	HLS3DBB	4XASC4-M	PD30454
0168 13 19	HLS3DBB1	4XASC6-316	PD30488
0168 13 19 39	HLS3DBB1HP	4XASC6-IIY	PD30488
0168 17 10	HLS3DBB3	4XASC9/16MP-IIY	PD30489
0168 17 10 39	HLS3DBB4N	4XASCM6-316	PD30489
0168 17 13	HLS3DBB8M8F4F	4XATU4-316	PD30490
0168 17 13 39	HLS3DBB8R	4XHMLOSS	PD30490
0168 21 10	HLS3DBB9	4Z-B6LJ-SSP	PD30491
0168 21 10 39	HLS3DBBHP	4Z-B6XJ-SSP	PD30491
0168 21 13	HLS3DBBHPATK	5 BTX-S	PD30505
0168 21 13 39	HLS3DBBHPNC	5 BTX-SS	PD30505
0168 21 17	HLS3DBBNC	5 BU-S	PD30527
0168 21 17 39	HLS3DBBOXY	5 BZ-SS	PD30527
0168 27 13	HLS3DBBPK	5 C5X-S	PD30553
0168 27 13 39	HLS3M	5 CBU-S	PD30553
0168 27 17	HLS3M3	5 CCCTX-S	PD30562
0168 27 17 39	HLS3M4N	5 CCTX-S	PD30562
0168 27 21	HLS3M9	5 CTX-B	PD30714-0500/0306EN
0168 27 21 39	HLS3MDTP	5 CTX-S	PD30714-0500/0306EN
016-80201-0	HLS3MDTP3	5 DTX-S	PD30743
016-80207-0	HLS3MDTPNC	5 F5X-S	PD30743
016-80219-0	HLS3MDTPPK	5 FNTX-B	PD30751
016-80238-0	HLS3MHP	5 FNTX-S	PD30751
016-80249-0	HLS3MNC	5 FNU-S	PD30878-0210
016-80279-0	HLS3MOXY	5 FNZ-SS	PD30878-0210
016-80284-0	HLS3MPK	5 GTX-S	PD30935
016-80289-0	HLS4M	5 HP5ON-S	PD30935
016-80650-0	HLS5M	5 HP5ON-S V0894	PD30936
016-80686-0	HLS5M3	5 HP5ON-SS	PD30936
016-80845-0	HLS5M9	5 KTX-S	PD30937
016-81028-0	HLS5MCT	5 KTX-SS	PD30937
016-81029-0	HLS5MCT3	5 LHTX-S	PD30938

016-81033-0	HLS5MCTNC	5 OTX-S	PD30938
016-81034-0	HLS5MHP	5 P5ON-S	PD3-1/2-70
016-81037-0	HLS5MHP3	5 PNBZ-SS	PD3-1/2-70
016-81038-0	HLS5MHPNC	5 R5OX-S	PD31021
016-81042-0	HLS5MNC	5 RTX-S	PD31021
016-81045-0	HLS5MPK	5 S5OX-S	PD31200
016-81048-0	HLT2V	5 STX-S	PD31200
016-81049-0	HM2VX2049A	5 TIZ .188-SS	PD31210
016-81049-5	HM2VX2049A	5 TIZ .250-SS	PD31210
016-81050-0	HM5VX2049A	5 TU-S	PD31295-0280
016-81051-0	HM5VX2049A	5 TX-S	PD31295-0280
016-81052-0	HMBVX00XXA	5 TX-S BP	PD31494
016-81052-5	HMBVX00XXA	5 TX-SS	PD31494
016-81053-0	HMCVX00XXA	5 TZ-SS	PD31513
016-81080-0	HMCVX00XXA	5 TZ-T	PD31513
016-81081-0	HMDXX1	5 TZ-ZY	PD31514
016-81083-0	HMDXX1	5 V5OX-S	PD31514
016-81149-0	HMDXX2	5 V6X-S	PD31522
016-81154-0	HMDXX2	5 VTX-S	PD31522
016-81158-0	HMEVX2049A	5 WETX-WLN-S	PD31540
016-81230-0	HMEVX2049A	5 WLZ-SS	PD31540
016-81496-0	HMNVX2049A	5 WNTX-WLN-S	PD31546
016-81653-0	HMNVX2049A	5/16X24 UNF-2B	PD31546
016-81653-A	HMPVX2049A	500 B	PD32005-0150
016-81909-0	HMPVX2049A	500 B	PD32005-0150
016-82916-0	HMQVX2049A	500 RF	PD32005-0250
016-82917-0	HMQVX2049A	500 RF	PD32005-0250
016-82918-0	HMRB15CBD0-0900-0000000A7	500 W	PD32057
016-82919-0	HMRB15CBD0-0900-0000000A7	500 W	PD32057
016-82920-0	HMRB15CCP0-1300-000000000	500 W6	PD32074
016-82921-0	HMRB15CCP0-1300-000000000	500-000163	PD32074
016-82923-0	HMRB18BBD1-1440-000000000	500-000164	PD32075
016-82924-0	HMRB18BBD1-1440-000000000	500-000512	PD32075
016-82934-0	HMRB18BBD1-1440-A0W000000	500-000513	PD32076
016-82935-0	HMRB18BBD1-1440-A0W000000	500-000523	PD32076
016-82936-0	HMRB24BBD1-1330-000000000	500-000524	PD32079
016-84000-0	HMRB24BBD1-1330-000000000	500-000531	PD32079
016-84109-0	HMRB24BBD1-1330-A0W000000	500-000901	PD32093
016-84111-0	HMRB24BBD1-1330-A0W000000	500-000902	PD32093
016-84113-0	HMRS15C050-0050-000000000	500-000905	PD32127-0350HB
016-84114-0	HMRS15C050-0050-000000000	500-000908	PD32127-0350HB
016-84115-0	HMRS15C050-0110-000000000	500-000909	PD32127-0400
016-84127-0	HMRS15C050-0110-000000000	500-000910	PD32127-0400
016-84128-0	HMRS15C050-0500-000000000	500-000920	PD322
016-84137-0	HMRS15C050-0500-000000000	500-000922	PD32233
016-84137-5	HMRS15C050-0550-0000000C1	500-000925	PD32233
016-84141-0	HMRS15C050-0550-0000000C1	500-000930	PD32303
016-84141-5	HMRS15C050-0600-000000000	500-000931	PD32303
016-84142-0	HMRS15C050-0600-000000000	500-000932	PD32435
016-84149-0	HMRS15C050-0600-AB10000A3	500-000935	PD32435
016-84149-5	HMRS15C050-0600-AB10000A3	500-000936	PD32551
016-84150-0	HMRS18C250-2600-0000000A3	500-000941	PD32551
016-84166-0	HMRS18C250-2600-0000000A3	500-003000	PD32763-0002

016-84218-0	HMRS18C250-2600-AB10000A3	500-003011	PD32763-0002
016-84220-0	HMRS18C250-2600-AB10000A3	500-003110	PD32763-0003
016-84354-0	HMRS18S100-0340-0000000A3	500007-29	PD32763-0003
016-84529-0	HMRS18S100-0340-0000000A3	50001RP	PD32763-0004
016-84553-0	HMRS18S250-2100-1250000A4	50001RP	PD32763-0004
016-84599-0	HMRS18S250-2100-1250000A4	5000-50-00100-1000-000000	PD32763-0005
016-84600-0	HMRS24C100-0300-12000000	5000-50-00100-1000-000000	PD32763-0005
016-84601-0	HMRS24C100-0300-12000000	5000-50-00140-0000-000000	PD32763-0006
016-84617-0	HMRS24C100-0300-121000000	5000-50-00140-0000-000000	PD32763-0006
016-84618-0	HMRS24C100-0300-121000000	5000-50-00300-0000-000000	PD32763-0007
016-84661-0	HMRS24C100-0640-0000000A4	5000-50-00300-0000-000000	PD32763-0007
016-84738-0	HMRS24C100-0640-0000000A4	5000-50-00320-0000-000000	PD32763-0008
016-84785-0	HMRS24C101-1029-CD5000000	5000-50-00320-0000-000000	PD32763-0008
016-84797-0	HMRS24C101-1029-CD5000000	5000-50-00450-0000-000000	PD32763-0009
016-84844-0	HMRS24C101-1644-CD5000000	5000-50-00450-0000-000000	PD32763-0009
016-84845-0	HMRS24C101-1644-CD5000000	5000-50-00600-0000-000000	PD32763-0010
016-84968-0	HMRS24C320-0500-12000000	5000-50-00600-0000-000000	PD32763-0010
016-84969-0	HMRS24C320-0500-12000000	5000-50-00600-0000-010000	PD32763-0012
016-84982-0	HMRS24C320-0500-122000000	5000-50-00600-0000-010000	PD32763-0012
016-84988-0	HMRS24C320-0500-122000000	5000-50-00610-0000-000000	PD32765-0002
016-84996-0	HNPMB10	5000-50-00610-0000-000000	PD32765-0002
016-85034-0	HNPMB12	5000-50-00645-0000-000000	PD32765-0003
016-85050-0	HNPMB8	5000-50-00645-0000-000000	PD32765-0003
016-85108-0	HNV6258FFNC	5000-50-00650-0010-010000	PD32765-0004
016-85200-0	HNV6MO4FF	5000-50-00650-0010-010000	PD32765-0004
016-85214-0	HNV6MO8FF	5000-50-00700-0000-000000	PD32765-0005
016-85279-0	HNV6MO8FFNC	5000-50-00700-0000-000000	PD32765-0005
016-85305-0	HNV6MO8M8F	5000-50-00750-0000-000000	PD32765-0006
016-85320-0	HNV6MOM10A	5000-50-00750-0000-000000	PD32765-0006
016-85322-0	HNV6MOM12A	5000-50-00800-0000-000000	PD32765-0007
016-85323-0	HNV6MOM6A	5000-50-00800-0000-000000	PD32765-0007
016-85324-0	HNVHC4FF	5000-50-00850-0000-000000	PD32765-0008
016-85324-5	HNVHC8FF	5000-50-00850-0000-000000	PD32765-0008
016-85325-0	HNVM8A	5000-50-01000-0000-000000	PD32765-0010
016-85361-0	HNVM8FF	5000-50-01000-0000-000000	PD32765-0010
016-85477-0	HNVS12A	5000-50-01100-0000-000000	PD32828
016-85518-0	HNVS12FF	5000-50-01100-0000-000000	PD32828
016-85519-0	HNVS12FFHP	5000-50-01300-0000-000000	PD32829
016-85556-0	HNVS12RFF	5000-50-01300-0000-000000	PD32829
016-85556-5	HNVS16A	5000-50-01350-0000-000000	PD32830
016-85564-0	HNVS16M16F	5000-50-01350-0000-000000	PD32830
016-85565-0	HNVS4A	5000-50-01700-0000-000000	PD32956
016-85567-0	HNVS4A3	5000-50-01700-0000-000000	PD32956
016-85600-0	HNVS4A9	50008-01130	PD32956
016-85680-0	HNVS4AAT	50008-01130	PD32956
016-85740-0	HNVS4AHW	5000-PSN	PD32957
016-85979-0	HNVS4APK	5000-PSN	PD32957
016-86051-0	HNVS4APM	5000-PSV	PD33225-0300
016-86058-0	HNVS4FF	5000-PSV	PD33225-0300
016-86071-0	HNVS4FF3	500-100121	PD33387
016-86090-0	HNVS4FF9	500-150071	PD33387
016-86091-0	HNVS4FFAT	500-30	PD33389
016-86093-0	HNVS4FFATK	500-30	PD33389

016-86094-0	HNVS4FFBM	500-31	PD33399
016-86095-0	HNVS4FFHP	500-31	PD33399
016-86096-0	HNVS4FFHP3	500-32	PD33400
016-86097-0	HNVS4FFHPAT	500-32	PD33400
016-86098-0	HNVS4FFHPHW	500-33	PD33402
016-86106-0	HNVS4FFHPNC	500-33	PD33402
016-86134-0	HNVS4FFHPPK	500357-7	PD33403
016-86135-0	HNVS4FFHW	500457-6	PD33403
016-86135-5	HNVS4FFNC	5005-4	PD33404
016-86136-0	HNVS4FFOXY	50055FIL	PD33404
016-86137-0	HNVS4FFPK	50055FIL	PD33405
016-86138-0	HNVS4FFPM	50066FIL	PD33405
016-86139-0	HNVS4FFV	50066FIL	PD33437
016-86149-5	HNVS4M4F	5009-4	PD33437
016-86181-0	HNVS4M4F3	500FG10	PD33446
016-86183-0	HNVS4M4F9	500FG2430MTC	PD33446
016-86201-0	HNVS4M4FAT	500FG30	PD33448
016-86213-0	HNVS4M4FHP	500FG30MTC	PD33448
016-86213-5	HNVS4M4FNC	500MA30MTC	PD33457
016-86222-0	HNVS4M4FPM	500MAM30	PD33457
016-86254-5	HNVS4M4FPT	500MAM30MTC	PD33458
016-86256-0	HNVS4M4FV	5010 RV	PD33458
016-86299-0	HNVS4M4FV3	5010 RV	PD33459
016-86301-0	HNVS4M4FV9	5010 RVUV	PD33459
016-86313-0	HNVS4M4FVNC	5010 RVUV	PD33460
016-86353-0	HNVS4M4FVPM	5010 UV	PD33460
016-86363-0	HNVS4RFF	5010 UV	PD33462
016-86366-0	HNVS4RFFHP	5010 V	PD33462
016-86376-0	HNVS6A	5010 V	PD33465
016-86434-0	HNVS6A3	5010 VUV	PD33465
016-86436-0	HNVS6AOXY	5010 VUV	PD33469
016-86437-0	HNVS6APK	501-00300	PD33469
016-86456-0	HNVS6APM	501-00300	PD33470
016-86459-0	HNVS6FF	501-00350	PD33470
016-86469-0	HNVS6FF3	501-00350	PD33471
016-86480-0	HNVS6FF9	501-00400	PD33471
016-86489-0	HNVS6FFAT	501-00400	PD33472
016-86855-0	HNVS6FFHP	501-00600	PD33472
016-86890-0	HNVS6FFHW	501-00600	PD33475
016-86905-0	HNVS6FFNC	501-00630	PD33475
016-86915-0	HNVS6FFOXY	501-00630	PD33510-0002
016-86916-0	HNVS6FFPK	501-00700	PD33510-0002
016-86969-0	HNVS6FFPM	501-00700	PD33512-0002
016-86978-0	HNVS6M6F	501-00795	PD33512-0002
016-86996-0	HNVS6M6FNC	501-00795	PD33512-0004
016-86998-0	HNVS6M6FV	501-00800	PD33512-0004
016-87001-0	HNVS6RFF	501-00800	PD33521
016-87004-0	HNVS8A	501-00850	PD33521
016-87082-0	HNVS8A3	501-00850	PD33558
016-87083-0	HNVS8A9	501-00900	PD33558
016-87083-5	HNVS8AAT	501-00900	PD33632
016-87108-0	HNVS8ALHW	501-00960	PD33632
016-87217-0	HNVS8AOXY	501-00960	PD33634

016-87241-0	HNVS8APK	501-01000	PD33634
016-87310-0	HNVS8APM	501-01000	PD33672
016-87310-5	HNVS8FF	501-01350	PD33672
016-87501-0	HNVS8FF3	501-01350	PD33678
016-87502-0	HNVS8FF-6S	501-01400	PD33678
016-87503-0	HNVS8FF9	501-01400	PD33726
016-87504-0	HNVS8FFAT	501-01447	PD33726
016-87505-0	HNVS8FFATK	501-01447	PD33854-0033
016-87506-0	HNVS8FFBM	501-01500	PD33854-0033
016-87507-0	HNVS8FFHP	501-01500	PD33854-0233
016-87508-0	HNVS8FFHP3	501-01600	PD33854-0233
016-87512-0	HNVS8FFHPAT	501-01600	PD33854-6133
016-87545-0	HNVS8FFHPHW	501-01750	PD33854-6133
016-87643-0	HNVS8FFHPNC	501-01750	PD33861
016-87653-0	HNVS8FFHPPK	501-01925	PD33861
016-87653-5	HNVS8FFHW	501-01925	PD33880
016-87702-0	HNVS8FFLHW	50101RP	PD33880
016-87702-5	HNVS8FFNC	50101RP	PD33880
016-87751-0	HNVS8FFOXY	501-02000	PD33880
016-87751-5	HNVS8FFPK	501-02000	PD33883
016-87755-0	HNVS8FFPM	501-02075	PD33883
016-87819-0	HNVS8FFV	501-02075	PD33933-0050
016-87820-0	HNVS8M8F	501-02182	PD33933-0050
016-87932-0	HNVS8M8F3	501-02182	PD33933-0320
016-87991-0	HNVS8M8F9	501-03000	PD33933-0320
016-88167-0	HNVS8M8FAT	501-03000	PD341
016-88219-0	HNVS8M8FHP	501-03050	PD34143-0033
016-88219-5	HNVS8M8FHP3	501-03050	PD34143-0033
016-88346-0	HNVS8M8FHPHW	501-03200	PD34143-0233
016-88358-0	HNVS8M8FHPNC	501-03200	PD34143-0233
016-88358-5	HNVS8M8FHW	501-03500	PD34143-4533ATEX
016-88365-0	HNVS8M8FNC	501-03500	PD34143-4533ATEX
016-88389-0	HNVS8M8FOXY	501-03650	PD34143-6133
016-88400-0	HNVS8M8FPK	501-03650	PD34143-6133
016-88400-5	HNVS8M8FPM	501-04350	PD34226
016-88472-0	HNVS8M8FV	501-04350	PD34226
016-88503-0	HNVS8M8FV3	501-06300	PD343
016-88514-0	HNVS8M8FV9	501-06300	PD34317
016-88558-0	HNVS8M8FVNC	5010FIL	PD34317
016-88559-0	HNVS8M8FVOXY	5010FIL	PD34402
016-88560-0	HNVS8M8FVPK	5011 RFV	PD34402
016-88561-0	HNVS8M8FVPM	5011 RFV	PD34693
016-88563-0	HNVS8MMHP	5011 RV	PD34693
016-88567-0	HNVS8RFF	5011 RV	PD34694
016-88568-0	HNVS8RFFV	5011 V	PD34694
016-88569-0	HNVSBW8NB3	5011 V	PD34695
016-88570-0	HNVSM10A	501211-4	PD34695
016-88571-0	HNVSM10A3	5015-00800	PD34769
016-88574-0	HNVSM12A	5015-00800	PD34769
016-88575-0	HNVSM12A3	5015-00900	PD34794
016-88576-0	HNVSM12A9	5015-00900	PD34794
016-88583-0	HNVSM12AAT	5015-02050	PD34796
016-88584-0	HNVSM12ANC	5015-02050	PD34796

016-88585-0	HNVSM12APM	5016-00770	PD34796
016-88588-0	HNVSM14A	5016-00770	PD34796
016-88588-5	HNVSM6A	5016-01100	PD34796ATEX
016-88589-0	HNVSM6A3	5016-01100	PD34796ATEX
016-88590-0	HNVSM6A9	5016-01515	PD34808-0033
016-88591-0	HNVSM6AAT	5016-01515	PD34808-0033
016-88592-0	HNVSM6ANC	5016-01850	PD34808-6133
016-88594-0	HNVSM6AOXY	5016-01850	PD34808-6133
016-88595-0	HNVSM6APM	5016-02000	PD34880
016-88597-0	HNVSM8A	5016-02000	PD34880
016-88598-0	HNVSM8A3	5016-02200	PD34893-6133
016-88599-0	HNVSM8AOXY	5016-02200	PD34893-6133
016-88600-0	HNVSM8APM	5016-02580	PD34893-6933
016-88601-0	HNVSSW14MMTB36S	5016-02580	PD34893-6933
016-88602-0	HNVSSW16MMTB36S	5016-02650	PD34901-0220
016-88603-0	HNVSSW16NB3	5016-02650	PD34901-0220
016-88604-0	HNVSSW8NB3	5016-02700	PD34905
016-88646-0	HNVSSW8TB3	5016-02700	PD34905
016-88647-0	HOCP-30805	5016-02900	PD34921-0233
016-88699-0	HOZE-OIL	5016-02900	PD34921-0233
016-88701-0	HP014-4002	5016-02932	PD34921-0233
016-88719-0	HP014-4002	5016-02932	PD34921-0233
016-88725-0	HP04C2100N	5016-02980	PD34921-1333
016-88774-0	HP1010 4131	5016-02980	PD34921-1333
016-88796-0	HP1010 4131	5016-QC	PD34921-6133
016-88800-0	HP1010 4132	5016-QC	PD34921-6133
016-88853-0	HP1010 4132	5020 RHUV	PD34951-0233
016-88853-5	HP1010 4171	5020 RUV	PD34951-0233
016-88861-0	HP1010 4171	5020 RUV	PD34952-0233
016-88867-0	HP1010 4172	5020 RV	PD34952-0233
016-88875-0	HP1010 4172	5020 RV	PD34966
016-88891-0	HP1010 5131	5020 UV	PD34966
016-88902-0	HP1010 5131	5020 UV	PD34984-0033
016-88907-0	HP1010 5132	5020 V	PD34984-0033
016-88954-0	HP1010 5132	5020 V	PD34984-0233
016-88955-0	HP1010 5171	502-00360	PD34984-0233
016-88956-0	HP1010 5171	502-00360	PD34984-5733
016-88957-0	HP1010 5172	502-01450	PD34984-5733
016-88959-0	HP1010 5172	502-01450	PD34984-6133
016-88960-0	HP1020 413	502-01550	PD34984-6133
016-88962-0	HP1020 413	502-01550	PD34985-0033
016-88963-0	HP1020 417	502-01700	PD34985-0033
016-88965-0	HP1020 417	502-01700	PD34985-0233
016-88965-5	HP1020 513	502-01800	PD34985-0233
016-88966-0	HP1020 513	502-01800	PD34985-0233
016-88967-0	HP1020 517	502-02000	PD34985-0233
016-88968-0	HP1020 517	502-02000	PD34985-1333
016-88970-0	HP13-01	502-02400	PD34985-1333
016-88970-5	HP13-01	502-02400	PD34985-4533ATEX
016-88972-0	HP1510 4131	502-02642	PD34985-4533ATEX
016-88973-0	HP1510 4131	502-02642	PD34985-4633ATEX
016-88975-0	HP1510 4132	5021 RFV	PD34985-4633ATEX
016-88976-0	HP1510 4132	5021 RFV	PD34985-4833ATEX

016-88977-0	HP1510 5131	5021 RV	PD34985-4833ATEX
016-89004-0	HP1510 5131	5021 RV	PD34985-5133
016-89016-0	HP1510 5132	5021 V	PD34985-5133
016-89024-0	HP1510 5132	5021 V	PD34985-5733
016-89025-0	HP1510 5172	50-2110AR	PD34985-5733
016-89028-0	HP1510 5172	50-2110AR	PD34985-6133
016-89029-0	HP1520 413	5021-QC	PD34985-6133
016-89030-0	HP1520 413	5021-QC	PD34986-0033
016-89063-0	HP16	50-250	PD34986-0033
016-89067-0	HP16	5025-3PR	PD34986-0233
016-89087-0	HP204-2001	5025-4PB	PD34986-0233
016-89138-0	HP204-2001	5025-4PG	PD34986-6133
016-89141-0	HP204-2003	5025-4PO	PD34986-6133
016-89161-0	HP204-2003	5025-4PR	PD34991
016-89162-0	HP204-3001	5025-4PY	PD34991
016-89164-0	HP204-3001	5026-QC	PD34993
016-89165-0	HP204-3002	5026-QC	PD34993
016-89174-0	HP204-3002	50-2800B	PD35041
016-89202-0	HP204-3003	50-2800R0200	PD35041
016-89203-0	HP204-3003	50-2800T	PD35041
016-89279-0	HP204-4001	5029-3PR	PD35041
016-89281-0	HP204-4001	5029-4PB	PD35212
016-89298-0	HP204-5001	5029-4PG	PD35212
016-89349-0	HP204-5001	5029-4PO	PD35222
016-89404-0	HP204-6001	5029-4PR	PD35222
016-89408-0	HP204-6001	5029-4PY	PD35232
016-89482-0	HP204-7001	503-00200	PD35232
016-89531-0	HP204-7001	503-00200	PD35239
016-89547-0	HP242-002	503-00730	PD35239
016-89555-0	HP242-002	503-00730	PD35281
016-89557-0	HP26	503-01000	PD35281
016-89558-5	HP26	503-01000	PD35297
016-89575-0	HP344-2003	503-01200	PD35297
016-89580-0	HP344-2003	503-01200	PD35323-0400
016-89591-0	HP-4	503-01350	PD35323-0400
016-89595-0	HP-6	503-01350	PD35331-0010
016-89740-0	HP8-3	503-01400	PD35331-0010
016-89771-0	HP8-4	503-01400	PD35331-0010
016-89826-0	HPA.2225.100	503-01613	PD35331-0010
016-89828-0	HPA.2425.100	503-01613	PD35344-0005
016-89837-0	HPA.2525.100	503-01650	PD35344-0005
016-89851-0	HPA.2625.100	503-01650	PD35344-0010
0169 10 13	HPA.2725.100	503-03050	PD35344-0010
0169 10 17	HPA.2825.100	503-03050	PD35346-0010
0169 13 17	HPA.2925.100	503-03150	PD35346-0010
0169 13 21	HPA4219100	503-03150	PD35346-0010
0169 17 21	HPA4419100	503-03300	PD35346-0010
0169 17 27	HPA4515100	503-03300	PD35419
0169 21 27	HPA4519100	503-11700	PD35419
016-91124-0	HPA4615100	503-11700	PD35420
016-91174-0	HPA4619100	503-11710	PD35420
016-91230-0	HPA4719100	503-11710	PD35421
016-91239-0	HPA4819100	50318FIL	PD35421

016-91245-0	HPA4919100	50318FIL	PD35421
016-91277-0	HPB10	50326FIL	PD35421
016-91287-0	HPB10-6	50326FIL	PD35422
016-91294-0	HPB12	50353FIL	PD35422
016-91401-0	HP-B-13	50353FIL	PD35423
016-91401-5	HP-B-13-RFL	50356FIL	PD35423
016-91403-0	HP-B-13X18-KIT	50356FIL	PD35424
016-91405-0	HPB14	50358FIL	PD35424
016-91544-0	HP-B-15	50358FIL	PD35425
016-91598-0	HP-B-15-RFL	504-00850	PD35425
016-91598-5	HP-B-18	504-00850	PD35427
016-91702-0	HP-B-18-RFL	504-01050	PD35427
016-91703-0	HPB4	504-01050	PD35450
016-91715-0	HPB5	504-01550	PD35450
016-91717-0	HPB6	504-01550	PD35455-0050
016-91719-0	HPB8	504-01825	PD35455-0050
016-91784-0	HPB8-6	504-01825	PD35490
016-91820-0	HPBVB16ALP	504-01900	PD35490
016-91871-0	HPBVB16FF	504-01900	PD35499
016-91880-0	HPBVB16FFLP	504-02150	PD35499
016-91898-0	HPBVB16M16FLP	504-02150	PD35501-0005
016-91910-0	HPBVBM25ALP	504-02160	PD35501-0005
016-91929-0	HPBWB12FF	504-02160	PD35501-0015
016-91932-0	HPBWB12FFLP	5040FIL	PD35501-0015
016-91932-5	HPBWB12M12FLP	5040FIL	PD35517
016-91934-0	HPBWB16ALP	505-00800	PD35517
016-91936-0	HPBWB16FF	505-00800	PD35520
016-91943-0	HPBWBM25ALP	505-01602	PD35520
016-91957-0	HPBWK12FFLP	505-01602	PD35522
016-91958-0	HPBXB12A	505-02800	PD35522
016-91971-0	HPBXB8FF	505-02800	PD35523
016-91985-0	HPBXB8FFHP	506-00098-8	PD35523
016-91988-0	HPBXB8M8F	506-00-20-00	PD35524
016-92081-0	HPBXB8M8FHP	506-01-20-00	PD35524
016-92273-0	HPBXBM16A	506-02400	PD35526
016-92384-0	HPBXBM18A	506-02400	PD35526
016-92387-0	HPBXBM20A	50610-00810	PD35527
016-92402-0	HPBYB12FF	50610-00810	PD35527
016-92412-0	HPBYB4A	50655FIL	PD35528
016-92715-0	HPBYB4A3	50655FIL	PD35528
016-92912-0	HPBYB4AFS	50658FIL	PD35529
016-92913-0	HPBYB4AHL	50658FIL	PD35529
016-94230-0	HPBYB4ALC	50660FIL	PD35530
016-94241-0	HPBYB4APK	50660FIL	PD35530
016-94260-0	HPBYB4ASA	507-00-20-00	PD35531
016-94283-0	HPBYB4FF	507-00500	PD35531
016-94352-0	HPBYB4FF3	507-00500	PD35534
016-94361-0	HPBYB4FFFS	507-00700	PD35534
016-94420-0	HPBYB4FFHL	507-00700	PD35535
016-94420-5	HPBYB4FFHP	507-00750	PD35535
016-94470-0	HPBYB4FFHP3	507-00750	PD35536
016-94491-0	HPBYB4FFHPFS	507-01-20-00	PD35536
016-94516-0	HPBYB4FFHPHL	507-04202	PD35536

016-94562-0	HPBYB4FFHPLC	507-04202	PD35536
016-94684-0	HPBYB4FFHPSA	5073-01000	PD35537
016-94717-0	HPBYB4FFLC	5073-01000	PD35537
016-94728-0	HPBYB4FFNC	5073-01100	PD35550
016-94864-0	HPBYB4FFPK	5073-01100	PD35550
016-95004-0	HPBYB4FFSA	5073-01350	PD35557
016-95016-0	HPBYB4M4F	5073-01350	PD35557
016-95019-0	HPBYB4M4F3	5073-01550	PD35577
016-95023-0	HPBYB4M4FFS	5073-01550	PD35577
016-95055-0	HPBYB4M4FHL	5073-01750	PD35578
016-95058-0	HPBYB4M4FHP	5073-01750	PD35578
016-95098-0	HPBYB4M4FHP3	5073-01755	PD35579
016-95122-0	HPBYB4M4FHPFS	5073-01755	PD35579
016-95127-0	HPBYB4M4FHPHL	5073-01955	PD35580
016-95146-0	HPBYB4M4FHPLC	5073-01955	PD35580
016-95159-0	HPBYB4M4FHPNC	5073-02050	PD35583
016-95187-0	HPBYB4M4FHPSA	5073-02050	PD35583
016-95238-0	HPBYB4M4FLC	5073-02250	PD35584
016-95246-5	HPBYB4M4FNC	5073-02250	PD35584
016-95266-0	HPBYB4M4FPK	5073-02610	PD35598
016-95269-0	HPBYB4M4FSA	5073-02610	PD35598
016-95269-5	HPBYB6A	5073-02650	PD35795
016-95286-0	HPBYB6A3	5073-02650	PD35795
016-95312-0	HPBYB6AFS	5073-02755	PD35855
016-95313-0	HPBYB6AHL	5073-02755	PD35855
016-95314-0	HPBYB6ALC	5073-02774	PD35891-0400
016-95314-5	HPBYB6APK	5073-02774	PD35891-0400
016-95315-0	HPBYB6ASA	5073-02850	PD35924
016-95315-5	HPBYB6FF	5073-02850	PD35924
016-95316-0	HPBYB6FF3	5073-02974	PD35986
016-95316-5	HPBYB6FFFS	5073-02974	PD35986
016-95327-0	HPBYB6FFHL	5073-03050	PD36008
016-95328-0	HPBYB6FFHP	5073-03050	PD36008
016-95329-0	HPBYB6FFHP3	5073-03174	PD36015
016-95330-0	HPBYB6FFHPFS	5073-03174	PD36015
016-95330-5	HPBYB6FFHPHL	5073-03250	PD36015
016-95331-0	HPBYB6FFHPLC	5073-03250	PD36015
016-95331-5	HPBYB6FFHPNC	5073-03455	PD36022
016-95333-0	HPBYB6FFHPSA	5073-03455	PD36022
016-95342-0	HPBYB6FFLC	5073-03650	PD36023
016-95343-0	HPBYB6FFNC	5073-03650	PD36023
016-95343-5	HPBYB6FFPK	5073-03774	PD36036
016-95344-0	HPBYB6FFSA	5073-03774	PD36036
016-95345-0	HPBYB6RFF	5073-03850	PD361
016-95345-5	HPBYB8A	5073-03850	PD36112
016-95346-0	HPBYB8A3	5073-04050	PD36112
016-95348-0	HPBYB8AFS	5073-04050	PD36114
016-95386-0	HPBYB8AHL	5080-00111	PD36114
016-95410-0	HPBYB8ALC	5080-00111	PD36114
016-95431-0	HPBYB8APK	508-00-20-00	PD36114
016-95435-0	HPBYB8ASA	50940G	PD36121
016-95436-0	HPBYB8FF	50941G	PD36121
016-95492-0	HPBYB8FF3	50942G	PD36122

016-95493-0	HPBYB8FFFS	50943G	PD36122
016-95515-0	HPBYB8FFHL	50944G	PD36124
016-95518-0	HPBYB8FFHP	50945G	PD36124
016-95539-0	HPBYB8FFHP3	50946G	PD36125
016-95546-0	HPBYB8FFHPFS	50947G	PD36125
016-95555-0	HPBYB8FFHPHL	50948G	PD36172
016-95560-0	HPBYB8FFHPNC	50949G	PD36172
016-95574-0	HPBYB8FFHPSA	50950G	PD36335
016-95576-0	HPBYB8FFLC	50951G	PD36335
016-95577-0	HPBYB8FFNC	50952G	PD36335
016-95603-0	HPBYB8FFPK	50953G	PD36335
016-95605-0	HPBYB8FFSA	50H-20	PD36336
016-95605-5	HPBYB8M8F	50H-24	PD36336
016-95606-0	HPBYB8M8F3	50H-32	PD36336
016-95606-5	HPBYB8M8FFS	50KAAN10MPXS	PD36336
016-95607-0	HPBYB8M8FHL	50KAAW10MPNS	PD36337
016-95607-5	HPBYB8M8FHP	50KAAW10MPXS	PD36337
016-95636-0	HPBYB8M8FHP3	50KAAW13MPNS	PD36337
016-95649-0	HPBYB8M8FHPFS	50KAAW13MPXS	PD36337
016-95653-0	HPBYB8M8FHPHL	50KAAW17MPXS	PD36338
016-95653-5	HPBYB8M8FHPLC	50KAIW10MPNS	PD36338
016-95666-0	HPBYB8M8FHPNC	50KAIW10MPXS	PD36338
016-95669-5	HPBYB8M8FHPSA	50KAIW13MPNS	PD36338
016-95723-0	HPBYB8M8FLC	50KAIW13MPXS	PD36339
016-95735-0	HPBYB8M8FNC	50KAIW17MPXS	PD36339
016-95801-0	HPBYB8M8FPK	50KAKS06MPNS	PD36339
016-95803-0	HPBYB8M8FSA	50KAKS06MPXS	PD36339
016-95804-0	HPBYBM10A	50KATF04MPNS	PD36350
016-95821-0	HPBYBM10A3	50KATF04MPXS	PD36350
016-95822-0	HPBYBM10AFS	50KATF06MPNS	PD36351
016-95846-0	HPBYBM10AHL	50KATF06MPXS	PD36351
016-95860-0	HPBYBM10ALC	50KATF08MPXS	PD36461
016-95861-0	HPBYBM10APK	50KATF09MPXS	PD36461
016-95863-0	HPBYBM10ASA	50KATF10MPXS	PD36500
016-95864-0	HPBYBM12A	50KATS04MVXS	PD36500
016-95867-0	HPBYBM12A3	50KATS05MPXS	PD36501
016-95874-0	HPBYBM12AFS	50KATS06MPXS	PD36501
016-95875-0	HPBYBM12AHL	50KFIW10MPXS	PD36501
016-95877-0	HPBYBM12ALC	50-P-60	PD36501
016-95918-0	HPBYBM12APK	50-P-61	PD36600-0100
016-95927-0	HPBYBM12ASA	50-P-62	PD36600-0100
016-95928-0	HPBYBM14A	50-P-72	PD36663
016-95935-0	HPBYBM15A	50SFAW10MXN	PD36663
016-95970-0	HPBYBM6A	50SFAW10MXX	PD36714
016-95981-0	HPBYBM6A3	50SFIW10MXN	PD36714
016-95986-0	HPBYBM6AFS	50SFIW10MXX	PD36716
016-95989-0	HPBYBM6AHL	50SFKO06MXN	PD36716
016-95992-0	HPBYBM6ALC	50SFTF04MXN	PD36718
016-96235-0	HPBYBM6APK	50SFTF04MXX	PD36718
016-96252-0	HPBYBM6ASA	50SFTF06MXN	PD36720
016-96324-0	HPBYBM8A	50SFTF06MXX	PD36720
016-96326-0	HPBYBM8A3	50Y9071	PD36721
016-96438-0	HPBYBM8AFS	50Y9071-SV270	PD36721

016-96446-0	HPBYBM8AHL	50Y9081	PD36723
016-96448-0	HPBYBM8ALC	50Y9872	PD36723
016-96578-0	HPBYBM8APK	5-1/4 F5OG-S	PD36729
016-96720-0	HPBYBM8ASA	5-1/4 ZHLW2-SS	PD36729
016-96721-0	HPBYD4FF	5-1/8 F5OG-S	PD36740
016-96830-0	HPBYD8FF	5-1/8 ZHLW2-SS	PD36740
016-98147-0	HPBYDM10A	510-000114	PD36743
016-98455-0	HPBYE8FF	510-000115	PD36743
016-98521-0	HPBYG8FF	510-000125	PD36744
016-98525-0	HPBYGVB12	510-000402	PD36744
016-98977-0	HPBYGVB123	510-000630	PD36745
0171 02 10 01	HPBYGVB12FS	510-000806	PD36745
0171 02 10 02	HPBYGVB12HL	510-000808	PD36746
0171 02 10 03	HPBYGVB12HP	510-000810	PD36746
0171 02 10 04	HPBYGVB12HP3	510-000812	PD36748
0171 02 10 05	HPBYGVB12HPFS	510-000822	PD36748
0171 02 55 01	HPBYGVB12HPHL	510-000824	PD36754
0171 03 10 01	HPBYGVB12HPLC	510-000826	PD36754
0171 03 10 02	HPBYGVB12HPNC	510-001130	PD36756
0171 03 10 03	HPBYGVB12HPPBV	510-001200	PD36756
0171 03 10 04	HPBYGVB12HPSA	510-001201	PD36803
0171 03 10 05	HPBYGVB12LC	510-001205	PD36803
0172 05 13	HPBYGVB12NC	510-001230	PD36804
0172 12 17	HPBYGVB12PBV	510-001285	PD36804
0172 12 21	HPBYGVB12PK	510-001300	PD36818-0233
0178 10 19	HPBYGVB12SA	510-001301	PD36818-0233
0178 13 10	HPBYGVB8	510-001306	PD36818-6133
0178 17 10	HPBYGVB83	510-001320	PD36818-6133
0178 17 13	HPBYGVB8FS	510-001385	PD36819-0025
0178 21 13	HPBYGVB8HL	510-001422	PD36819-0025
0178 21 17	HPBYGVB8HP	510-001423	PD36819-0050
0178 27 21	HPBYGVB8HP3	510-001425	PD36819-0050
0178 55 19	HPBYGVB8HPFS	510-001437	PD36819-0125
0179 10 13	HPBYGVB8HPHL	510-001438	PD36819-0125
0179 13 17	HPBYGVB8HPLC	510-001445	PD36819-0320
0179 17 21	HPBYGVB8HPNC	510-001488	PD36819-0320
0179 67 13	HPBYGVB8HPPBV	510-001610	PD36822
0180 04 00	HPBYGVB8HPSA	510-001614	PD36822
0180 05 00	HPBYGVB8LC	510-001635	PD36827
018-0002-900	HPBYGVB8NC	510-001637	PD36827
018-0012-900	HPBYGVB8PBV	510-001638	PD36831
018-0048-900	HPBYGVB8PK	510-005401	PD36831
018-0074-900	HPBYGVB8SA	510-006000	PD36968
018-0083-900	HPBYK4M4F	510-006001	PD36968
0181 03 04	HPBYK8A	510-006020	PD37020
0181 04 06	HPBYK8FF	510-006021	PD37020
018-20N	HPBYK8FFNC	510-006100	PD37050
0183 02 10	HPBYKM12A	510-006401	PD37050
0184 02 10	HPBYKM12AHL	510-006440	PD37050
0185 04 00	HPBYT8FF	510-006497	PD37050
0185 07 00	HPC5	510-007001	PD37081-0233
0185 10 00	HPD2N	510-007017	PD37081-0233
0186 05 13	HPD2S2	510-007029	PD37084

0187 05 10	HPD5N	510-007100	PD37084
0187 05 13	HPD8	510-007203	PD37135
0189 05 00	HPD8N	510-007211	PD37135
0191 04 13	HPDMB108N4N	510-007280	PD37173
0191 07 13	HPDMB48N4N	510-007283	PD37173
0191 07 21	HPDMB68N4N	510-007284	PD37174-0002
0191 10 13	HPF120RENTFEE	510-007391	PD37174-0002
0191 10 21	HPF320-42X4.0-ORCF	510-007401	PD37174-0003
0191 13 13	HPF440-65X8.0-VCF	510-007497	PD37174-0003
0191 13 21	HPF448-80X10.0-VCF	510-008000	PD37174-0003
0191 16 21	HPF620-38X5.0-FCF	510-008100	PD37174-0003
0192 10 13	HPF620-38X5.0-VCF	510-008203	PD37174-0004
0192 13 13	HPF624-50X6.0-FCF	510-008204	PD37174-0004
0192 13 21	HPF624-50X6.0-VCF	510-008401	PD37174-0005
0192 17 13	HPF632-50X6.0-VCF	510-008497	PD37174-0005
0192 17 21	HPF632-60X8.0-VCF	5100-50-00360-0000-000000	PD37174-0006
0192 21 21	HPF632-65X8.0-VCF	5100-50-00360-0000-000000	PD37174-0006
0195 07 00	HPFC616-30CF	5100-50-00500-0000-000000	PD37174-0007
0195 10 00	HPFC624-50CF	5100-50-00500-0000-000000	PD37174-0007
0195 13 00	HPFC632-65CF	5100-50-00650-0000-000000	PD37174-0008
0195 16 00	HPFCM616-30CF	5100-50-00650-0000-000000	PD37174-0008
0196 12 13	HPFCM632-65CF	5100-50-00700-0000-000000	PD37174-0009
0196 12 17	HPFM632-65X8.0-FCF	5100-50-00700-0000-000000	PD37174-0009
0196 12 21	HPG4-12K	5100-50-00750-0000-000000	PD37174-0010
0199 04 10	HPG4-23K	5100-50-00750-0000-000000	PD37174-0010
0199 04 13	HPG6-12K	5100-50-01500-0000-000000	PD37175-0002
0199 06 10	HPK10	5100-50-01500-0000-000000	PD37175-0002
0199 06 13	HPK10-6	5100-50-01830-0000-000000	PD37175-0002
0199 08 10	HPK10-8	5100-50-01830-0000-000000	PD37175-0002
0199 08 13	HPK12	5101-00725	PD37175-0003
0199 08 17	HPK12-10	5101-00725	PD37175-0003
0199 10 13	HPK14	5103-01260	PD37175-0004
0199 10 17	HPK4	5103-01260	PD37175-0004
0199 10 21	HPK6	5104FIL	PD37175-0005
0199 10 21 55	HPK6-4	5104FIL	PD37175-0005
0199 14 17	HPK8	5105FIL	PD37175-0006
0199 14 21	HPK8-4	5105FIL	PD37175-0006
0199 14 21 55	HPK8-6	5107-01850	PD37175-0007
0199 18 21	HPK-HS-8	5107-01850	PD37175-0007
0199 18 27	HPK-HSP-8	510-900000	PD37175-0008
0199 22 27	HPK-KL-03	510-900101	PD37175-0008
0199 22 34	HPK-KL-05	510-900205	PD37175-0009
0199 28 34	HPK-PVC-03	510-900206	PD37175-0009
01E-71580-0	HPK-PVC-05	510-900207	PD37175-0010
01E-71590-0	HPK-STA-03	510-900218	PD37175-0010
0200 10 00	HPK-STA-05	510-900220	PD37269
0200 13 00	HPM6LM3DBB	510-900221	PD37269
0200 52 00	HPM6LS2	510-900222	PD37270
0200 57 00	HPM6LS23	510-900223	PD37270
0200 60 00	HPM6LS2B	510-900226	PD37275
0200 65 00	HPM6LS2B3	510-900229	PD37275
0200 66 00	HPM6LS2BFS	510-900232	PD37327
0201 17 00	HPM6LS2BHL	510-900301	PD37327

0201 21 00	HPM6LS2BHP	510-900313	PD37327
0201 27 00	HPM6LS2BHP3	510-900500	PD37327
0201 34 00	HPM6LS2BHPFS	510-900505	PD37330
0201 42 00	HPM6LS2BHPHL	510-900523	PD37330
0201 49 00	HPM6LS2BHPLC	510-900528	PD37343
0201 75 00	HPM6LS2BHPSA	510-900560	PD37343
0201 78 00	HPM6LS2BLC	510-900600	PD37343
0201 80 00	HPM6LS2BPK	510-900602	PD37343
0201 82 00	HPM6LS2BSA	510-900603	PD37461
0201 83 00	HPM6LS2FS	510-900610	PD37461
0201 88 00	HPM6LS2HL	510-900621	PD37462
0201 92 00	HPM6LS2HP	510-900622	PD37462
0202 65 00	HPM6LS2HP3	510-900630	PD37476
0202 66 00	HPM6LS2HPFS	510-900631	PD37476
0202 71 00	HPM6LS2HPHL	510-900650	PD37592-0140
0202 75 00	HPM6LS2HPLC	510-900654	PD37592-0140
0202 78 00	HPM6LS2HPSA	510-900675	PD37596-0050
0202 80 00	HPM6LS2LC	510-900701	PD37596-0050
0202 82 00	HPM6LS2NC	510-900702	PD37596-0080
0202 86 00	HPM6LS2PK	510-900703	PD37596-0080
0202 88 00	HPM6LS3DBB	510-900704	PD37596-0100
0205 10 00	HPM6LS3DBB3	510-900705	PD37596-0100
0205 11 00	HPM6LS3DBB4N	510-900706	PD37596-0125
0205 13 00	HPM6LS3DBB8A	510-900710	PD37596-0125
0205 14 00	HPM6LS3DBB8R8R4R	510-900721	PD37596-0175
0205 17 00	HPM6LS3DBBB	510-900723	PD37596-0175
0205 18 00	HPM6LS3DBBB3	510-900900	PD37596-0200
0205 21 00	HPM6LS3DBBBFS	510A-3	PD37596-0200
0205 22 00	HPM6LS3DBBBHL	510A-4	PD37596-0300
0205 27 00	HPM6LS3DBBBHP	510A-5	PD37596-0300
0205 28 00	HPM6LS3DBBBLC	510A-6	PD37596-0320
0205 34 00	HPM6LS3DBBBPK	510A-8	PD37596-0320
0205 35 00	HPM6LS3DBBBSA	5110-00550	PD37596-0500
0205 42 00	HPM6LS3DBBFS	5110-00550	PD37596-0500
0205 48 00	HPM6LS3DBBHL	5110-00650	PD37596-1400
0205 49 00	HPM6LS3DBBHP	5110-00650	PD37596-1400
0206 08 00	HPM6LS3DBBHP3	5115P1321	PD37596-1500
0206 10 00	HPM6LS3DBBHPFS	5117-00600	PD37596-1500
0206 11 00	HPM6LS3DBBHPLC	5117-00600	PD37597-0050
0206 13 00	HPM6LS3DBBHPNC	5117P0008	PD37597-0050
0206 14 00	HPM6LS3DBBHPSA	51221G	PD37597-0125
0206 17 00	HPM6LS3DBBLC	512C-04-00-00-00	PD37597-0125
0206 18 00	HPM6LS3DBBM12A	512C-04-01-00-00	PD37597-0150
0206 21 00	HPM6LS3DBBN	512C-08-00-00-00	PD37597-0150
0206 22 00	HPM6LS3DBBN3	512C-08-01-00-00	PD37597-0160
0206 27 00	HPM6LS3DBBNC	512C-16-00-00-00	PD37597-0160
0206 28 00	HPM6LS3DBBNFS	512C-16-01-00-00	PD37597-0320
0206 34 00	HPM6LS3DBBNHL	512C-32-00-00-00	PD37597-0320
0206 35 00	HPM6LS3DBBNHP	512C-32-01-00-00	PD37597-0350
0206 42 00	HPM6LS3DBBNHP3	513-10010-3	PD37597-0350
0206 49 00	HPM6LS3DBBNHPFS	514C-04-00-00-00	PD37597-0398
0207-12-12	HPM6LS3DBBNHPHL	514C-08-00-00-00	PD37597-0398
0207-16-16	HPM6LS3DBBNHPLC	514C-08-01-00-00	PD37597-0400

0207-20-20	HPM6LS3DBBNHPSA	514C-16-00-00-00	PD37597-0400
0207-2-2	HPM6LS3DBBNLC	514C-16-01-00-00	PD37597-0500
0207-24-24	HPM6LS3DBBNPK	514C-32-00-00-00	PD37597-0500
0207-32-32	HPM6LS3DBBNSA	514C-32-01-00-00	PD37597-0950
0207-4-4	HPM6LS3DBBPK	515-02002-8	PD37597-0950
0207-6-4	HPM6LS3DBBSA	515-02120-8	PD37598-0050
0207-6-6	HPM6LS3DBBSW8NB8F4F	515-02122-8	PD37598-0050
0207-8-8	HPMK4	515-12042-8	PD37598-0070
0209 10 00	HPMK4-3	51515-01550	PD37598-0070
0209 13 00	HPMK6	51515-01550	PD37598-0140
0209 17 00	HPMK6-4	51515-02800	PD37598-0140
0209 21 00	HPR.1219	51515-02800	PD37598-0160
0209 27 00	HPR.1229	51515-05900	PD37598-0160
0209 34 00	HPR.1419	51515-05900	PD37598-0200
0210 10 00	HPR.1429	515FIL	PD37598-0200
0210 13 00	HPR.1519	515FIL	PD37598-0350
0210 17 00	HPR.1529	515H-3	PD37598-0350
0210 21 00	HPR.1619	515H-4	PD37598-0360
0210 27 00	HPR.1629	515H-5	PD37598-0360
0210 34 00	HPR.1719	515H-6	PD37598-0420
0210 42 00	HPR.1729	516237P0002	PD37598-0420
0210 57 00	HPR.1819	517-00001-3	PD37599-0010
0210 60 00	HPR.1829	517-00011-3	PD37599-0010
0210 70 00	HPR.1919	517-00012-8	PD37599-0025
0210 82 00	HPR.1929	517-00089-8	PD37599-0025
0216 10 00	HPRVS4A-V-K2-551	517-00092-8	PD37599-0050
0216 11 00	HPRVS4M4F-BN-K8-5500	517-00094-8	PD37599-0050
0216 13 00	HPRVS4M4F-V-K1-150	517-00095-8	PD37599-0080
0216 14 00	HPRVS4M4F-V-K3-1450	517-00098-8	PD37599-0080
0216 17 00	HPRVS4M4F-V-K6-3190	517-00106-3	PD37599-0100
0216 18 00	HPRVSM6A-V-K3-1450	517-00107-3	PD37599-0100
0216 21 00	HR01000452	517-00118-8	PD37599-0140
0216 22 00	HR01000456	517-00142-8	PD37599-0140
0220 10 00	HR01000459	517-00147-8	PD37599-0160
0220 10 00 39	HR01000478	517-00148-8	PD37599-0160
0220 13 00	HR01000479	517-00200-3	PD37599-0180
0220 13 00 39	HR01000480	517-00203-3	PD37599-0180
0220 17 00	HR01000481	517-00259-8	PD37599-0320
0220 17 00 39	HR01000487	517-00260-8	PD37599-0320
0220 19 00	HR01002290	517-00265-8	PD37599-0610
0220 21 00	HR01003132	517-00267-8	PD37599-0610
0220 21 00 39	HR01003134	517-00275-8	PD37599-1050
0220 27 00 39	HR01003729	517-00278-8	PD37599-1050
0220 34 00 39	HR01003734	517-00286-8	PD37600-0125
0222 10 00	HR01003736	517-00306-8	PD37600-0125
0222 13 00	HR01003739	517-00402-8	PD37600-0260
0222 17 00	HR01003741	517-00421-8	PD37600-0260
0222 19 00	HR01003994	517-00427-8	PD37600-0500
0222 21 00	HR01004059	517-00445-8	PD37600-0500
0222 55 00	HR01004106	517-00448-8	PD37601-0050
0222 67 00 85	HR01005563	517-00520-8	PD37601-0050
024-00674-000	HR01006090	517-00754-8	PD37601-0080
024-00674-001	HR01006737	517-01012-2	PD37601-0080

024-00674-503	HR01007818	517-01017-2	PD37601-0125
024-00777-0	HR01008331	517-01117-8	PD37601-0125
024-00777-000	HR01008882	518C-12	PD37601-0200
024-00777-001	HR01032322	518C-16	PD37601-0200
024-00777-002	HR01033413	518C-3	PD37601-0320
024-00778-000	HR01034584	518C-4	PD37601-0320
024-00778-001	HR01034804	518C-5	PD37601-0400
024-00778-002	HR01037448	518C-6	PD37601-0400
024-00779-000	HR01037996	518C-6-DL	PD37601-0500
024-00779-002	HR01060705	518C-8	PD37601-0500
024-00779-502	HR01061581	518C-8-DL	PD37601-0850
024-00780-000	HR01063636	51H-20	PD37601-0850
024-00780-002	HR01066783	51H-24	PD37629
024-01177-0	HR01069011	51H-32	PD37629
024-01177-000	HR01069473	51KAAW13SPN	PD37632
024-01221-002	HR01076142	51KAIW13SPN	PD37632
024-01649-000	HR01076477	51KATF06SPN	PD37656-0020
024-02105-000	HR01081284	51KATF09SPN	PD37656-0020
024-02105-502	HR01082663	51KBAW13SPN	PD37669
024-02154-000	HR01091651	51KBAW17SPN	PD37669
024-02772-000	HR01500083	51KBAW21SPN	PD37673
024-02814-000	HR01500084	51KBIW13SPN	PD37673
024-02815-017	HR01500437	51KBIW13SVN	PD37673ATEX
024-02816-000	HR01500534	51KBIW17SPN	PD37673ATEX
024-02817-000	HR01500539	51KBIW17SVN	PD37760-0370
024-02818-000	HR01500637	51KBIW21SPN	PD37760-0370
024-02819-000	HR01500644	51KBTF06SPN	PD37786
024-02819-003	HR01500703	51KBTF09SPN	PD37786
024-02820-000	HR01500854	51KBTF09SVN	PD37827
024-02821-000	HR01501119	51KBTF13SPN	PD37827
024-02822-000	HR01501254	51KBTF13SVN	PD37834
024-02822-001	HR01501255	51SBAW13SPN	PD37834
024-02822-003	HR01501461	51SBAW13SVN	PD37835
024-02823-000	HR01501905	51SBAW17SPN	PD37835
024-02826-000	HR01502246	51SBAW21SPN	PD37911
024-02827-0	HR01502247	51SBAW21SVN	PD37911
024-02829-000	HR01502248	51SBIW13SPN	PD37950-0033
024-02831-000	HR01502249	51SBIW13SVN	PD37950-0033
024-02835-000	HR01502250	51SBIW17SPN	PD37950-0133
024-02836-000	HR01502251	51SBTF06SPN	PD37950-0133
024-02836-015	HR01502252	51SBTF06SVN	PD37950-0233
024-02836-016	HR01502253	51SBTF09SPN	PD37950-0233
024-02836-500	HR01502254	51SBTF09SVN	PD37950-5733
024-02838-000	HR01502255	51SBTF13SPN	PD37950-5733
024-02842-000	HR01502256	51SFAW13SXN	PD37951-5733
024-02842-014	HR01502257	51SFAW17SXN	PD37951-5733
024-02846-000	HR01502258	51SFIW13SXN	PD37988-0050
024-02848-000	HR01502259	51SFIW17SXN	PD37988-0050
024-02848-001	HR01502260	51SFTF06SXN	PD38000-0200
024-02848-500	HR01502261	51SFTF09SXN	PD38000-0200
024-02852-000	HR01502263	5-2 CBZ-SS	PD38000-0225
024-02852-501	HR01502265	5-2 DBZ-SS	PD38000-0225
024-02853-000	HR01502266	5-2 FBZ-SS	PD38048-0320

024-02853-003	HR01502267	5-2 GBZ-SS	PD38048-0320
024-02855-0	HR01502268	5200-50-00280-0000-000000	PD38050-0010
024-02855-000	HR01502269	5200-50-00280-0000-000000	PD38050-0010
024-02855-001	HR01502270	5200-50-00500-0000-000000	PD38072
024-02861-000	HR01502271	5200-50-00500-0000-000000	PD38072
024-02861-001	HR01502272	5200-50-00550-0000-000000	PD38115
024-02861-003	HR01502273	5200-50-00550-0000-000000	PD38115
024-02861-026	HR01502274	5200-50-00720-0000-000000	PD38118
024-02862-000	HR01502275	5200-50-00720-0000-000000	PD38118
024-02863-000	HR01502276	5200-50-00800-0000-000000	PD38120-0005
024-02866-001	HR01502277	5200-50-00800-0000-000000	PD38120-0005
024-02868-0	HR01502278	5200-50-00800-B000-000000	PD38120-0100
024-02868-000	HR01502333	5200-50-00800-B000-000000	PD38120-0100
024-02868-001	HR01502768	5200-50-00900-0000-000000	PD38120-0130
024-02868-003	HR01502769	5200-50-00900-0000-000000	PD38120-0130
024-02868-014	HR01502770	5200-50-01000-0000-000000	PD38151
024-02869-000	HR01502772	5200-50-01000-0000-000000	PD38151
024-02873-000	HR01502773	5200-50-01250-0000-000000	PD38180
024-02877-000	HR01502774	5200-50-01250-0000-000000	PD38180
024-02878-000	HR01502775	5200-50-01300-3000-000000	PD38181
024-02878-002	HR01502776	5200-50-01300-3000-000000	PD38181
024-02880-000	HR01503510	5200-50-01360-0000-000000	PD38232
024-02880-001	HR01503676	5200-50-01360-0000-000000	PD38232
024-02881-001	HR01504234	5200-50-01380-0000-000000	PD38233
024-02883-003	HR01505817	5200-50-01380-0000-000000	PD38233
024-02887-000	HR01505974	5200-50-01400-0000-000000	PD38253
024-02907-0	HR01508586	5200-50-01400-0000-000000	PD38253
024-02908-000	HR01508718	5200-50-01600-0000-000000	PD38424-0300
024-02912-000	HR01510871	5200-50-01600-0000-000000	PD38424-0300
024-02957-000	HR01511730	5200-50-01800-0000-000000	PD38424-0350
024-02957-002	HR01511758	5200-50-01800-0000-000000	PD38424-0350
024-02957-004	HR01511881	5205-2M	PD38468-0100
024-02987-000	HR01511970	5205-3M	PD38468-0100
024-02987-009	HR01513157	5205-4M	PD38479-0445
024-03038-000	HR01513254	5205-5M	PD38479-0445
024-03088-0	HR01513452	5205-6M	PD38493-0015
024-03088-000	HR01513453	5209-2M	PD38493-0015
024-03088-001	HR10033032	5209-3M	PD38493-0035
024-03088-002	HR10033686	5209-4M	PD38493-0035
024-03088-003	HR10040256	5209-5M	PD38493-0040
024-03088-500	HR10040627	5209-6M	PD38493-0040
024-03089-0	HR10040754	520N-3	PD38493-0050
024-03089-003	HR10040836	520N-3-3	PD38493-0050
024-03100-000	HR10040837	520N-3-DL	PD38511
024-03100-002	HR10041081	520N-4	PD38511
024-03100-003	HR10043802	520N-4-4	PD38516
024-03101-000	HR10044252	520N-4WHT	PD38516
024-03101-002	HR10044724	520N-5	PD38518-0025
024-03102-000	HR10047298	520N-5-5	PD38518-0025
024-03102-002	HR10047565	520N-5-5-5	PD38519
024-03102-003	HR10048052	520N-5-DL	PD38519
024-03102-500	HR10048109	520N-6	PD38520
024-03103-0	HR10048110	520N-6-6	PD38520

024-03103-000	HR10048430	520N-6-6-DL	PD38524
024-03103-500	HR10049442	520N-6-DL	PD38524
024-03104-000	HR10049612	520N-6WHT	PD38631-0015
024-03104-001	HR10050165	520N-8	PD38631-0015
024-03104-002	HR10050167	520N-8-8	PD38631-0050
024-03104-003	HR10050489	520N-8-8-8	PD38631-0050
024-03104-500	HR10051494K	520N-8-DL	PD38687
024-03104-501	HR10053009	521-002608	PD38687
024-03105-000	HR10053114	521-003065	PD38698
024-03105-001	HR10055185	521-003389	PD38698
024-03105-002	HR10055670	521-003521	PD38699-0250
024-03105-003	HR10055930	521-003526	PD38699-0250
024-03105-500	HR10056124	521-003633	PD38703
024-03105-501	HR10056376	521-003815	PD38703
024-03106-0	HR10057083	521-003816	PD38719-0015
024-03106-000	HR10057327	521-003916	PD38719-0015
024-03106-002	HR10057414	521-003941	PD38719-0025
024-03106-500	HR10057759	521-003995	PD38719-0025
024-03107-000	HR10062103	521-004112	PD38742
024-03107-003	HR10062266	521-004133	PD38742
024-03107-400	HR10062336	521-004269	PD38810
024-03108-000	HR10062336H	521-004270	PD38810
024-03108-002	HR10062848	521-004271	PD38828
024-03109-000	HR10064769K	521-004279	PD38828
024-03110-000	HR10064859	521-004280	PD38829
024-03110-001	HR10500015	521-004291	PD38829
024-03110-002	HR12001297	521-004309	PD38838-0160
024-03110-003	HR12001298	521-004328	PD38838-0160
024-03111-000	HR12001299	521-004345	PD38838-1050
024-03112-000	HR13014144	521-004346	PD38838-1050
024-03112-002	HR13021570K	521-004347	PD38840-0400
024-03112-003	HR13021663	521-004365	PD38840-0400
024-03112-502	HR13021702K	521-004366	PD38840-1000
024-03113-000	HR13021958K	521-004388	PD38840-1000
024-03114-000	HR13021959K	521-004413	PD38905
024-03114-001	HR13021963K	521-004414	PD38905
024-03116-000	HR13022578	521-004414U3	PD38948
024-03116-001	HR13022608	521-004429	PD38948
024-03117-001	HR13022629	521-004441	PD38995-0233
024-03117-003	HR13022714	521-004442	PD38995-0233
024-03117-503	HR13023265	521-004499	PD38995-0233
024-03118-000	HR13023266	521-004500	PD38995-0233
024-03118-002	HR13023378	521-004513	PD39016-0002
024-03119-0	HR13024300K	521-004521	PD39016-0002
024-03119-001	HR13024354K	521-004615	PD39016-0003
024-03120-000	HR13024399K	521-004616	PD39016-0003
024-03120-002	HR13025072	521-004617	PD39016-0004
024-03121-000	HR13025389	521-004617/01	PD39016-0004
024-03121-002	HR13025405	521-004625	PD39016-0006
024-03121-003	HR13025406	521-004626	PD39016-0006
024-03122-000	HR13025481	521-004631	PD39034-0233
024-03122-001	HR13027117	521-004648	PD39034-0233
024-03122-002	HR13027625	521-004655	PD39063

024-03122-003	HR13500291K	521-004706	PD39063
024-03123-0	HR13500346K	521-004732	PD39136
024-03123-000	HR13500375K	521-004748	PD39136
024-03123-002	HR13500402K	521-004749	PD39137
024-03123-500	HR13500775K	521-004753	PD39137
024-03123-501	HR13501045K	521-004764	PD39138
024-03124-0	HR13501142K	521-004767	PD39138
024-03124-000	HR13501516K	521-004796	PD39152
024-03124-001	HR14001748	521-004797	PD39152
024-03124-002	HR14001749	521-004798	PD39152
024-03124-003	HR14001750	521-004806	PD39152
024-03124-500	HR14001751	521-004822	PD39153
024-03125-000	HR14001752	521-004851	PD39153
024-03125-001	HR14001753	521-004866	PD39153
024-03125-002	HR14001754	521-004867	PD39153
024-03125-500	HR14001755	521-004888	PD39154
024-03126-002	HR14001756	521-004902	PD39154
024-03127-000	HR14001757	521-004917	PD39155
024-03130-001	HR14001758	521-004919	PD39155
024-03132-0	HR14001759	521-004920	PD39156
024-03132-000	HR14001760	521-004929	PD39156
024-03132-001	HR14001761	521-004930	PD39169
024-03132-003	HR14001762	521-004937	PD39169
024-03133-0	HR14001763	521-004938	PD39169
024-03135-000	HR14001764	521-004939	PD39169
024-03135-001	HR14001765	521-004947	PD39170
024-03136-003	HR14001766	521-004955	PD39170
024-03138-000	HR14001767	521-004961	PD39170
024-03138-001	HR14001768	521-004963	PD39170
024-03139-003	HR14001769	521-004965	PD39171
024-03141-0	HR14001770	521-004967	PD39171
024-03141-000	HR14001771	521-004968	PD39171
024-03141-5	HR14001772	521-004972	PD39171
024-03141-502	HR14001773	521-004973	PD39172
024-03142-000	HR14001774	521-004978	PD39172
024-03142-001	HR14001775	521-004980	PD39172
024-03146-0	HR14001776	521-004989	PD39172
024-03148-000	HR14001778	521-004993	PD39173
024-03148-001	HR14002658	521-004996	PD39173
024-03148-003	HR14002661	521-004997	PD39173
024-03148-004	HR14002662	521-005004	PD39173
024-03148-504	HR14002663	521-005006	PD39174
024-03150-001	HR14002664	521-005007	PD39174
024-03152-000	HR14003722K	521-005012	PD39174
024-03154-000	HR14003782K	521-005013	PD39174
024-03154-001	HR14003894	521-005015	PD39193
024-03154-004	HR14005301	521-005016	PD39193
024-03154-006	HR14005349K	521-005017	PD39194
024-03157-000	HR14500066K	521-005021	PD39194
024-03158-000	HR14500428K	521-005034	PD39195
024-03158-002	HR14501032	521-005042	PD39195
024-03158-503	HR14501033	521-005043	PD39196
024-03159-000	HR14501055	521-005044	PD39196

024-03161-000	HR14501152	521-005045	PD39197
024-03162-0	HR14501310	521-005046	PD39197
024-03162-000	HR14501360	521-005047	PD39198
024-03162-003	HR14501446	521-005048	PD39198
024-03162-012	HR21000665	521-005049	PD39198
024-03162-013	HR21500157	521-005050	PD39198
024-03162-503	HR21500771	521-005056	PD39199
024-03166-0	HR21501777	521-005058	PD39199
024-03174-0	HR21502072	521-005059	PD39200
024-03174-003	HR21502321	521-005060	PD39200
024-03174-031	HR53836039	521-005061	PD39221
024-03191-001	HRN100D-PS	521-005074	PD39221
024-03194-000	HRN100D-PS	521-005075	PD39286-0650
024-03212-000	HRN100S	521-005076	PD39286-0650
024-03213-0	HRN100S	521-005081	PD39382
024-03214-000	HRN100S-PS	521-005082	PD39382
024-03215-000	HRN100S-PS	521-005083	PD39383
024-03224-000	HRN15S-C180	521-005084	PD39383
024-03225-5	HRN15S-C180	521-005087	PD39386
024-03225-500	HRN200D	521-005092	PD39386
024-03230-000	HRN200D	5230G	PD39405
024-03255-0	HRN200S-C180	5230G-023-0NB	PD39405
024-03255-000	HRN200S-C180	5230G-100-00H	PD39431
024-03257-028	HRN20S	5230G-102-00Y	PD39431
024-03258-003	HRN20S	5240D-023-0NT	PD39467
024-03275-0	HRN30S	5-256-N552-9	PD39467
024-03275-000	HRN30S	5-256-V894-9	PD39476-0111
024-03275-019	HRN30S-C180	5-2829S	PD39476-0111
024-03275-028	HRN30S-C180	528N-3	PD39485-0033
024-03276-000	HRN30S-PS	528N-4	PD39485-0033
024-03303-001	HRN30S-PS	528N-4-4	PD39485-0233
024-03357-000	HROA06C	528N-5	PD39485-0233
024-03359-000	HROPD06C	528N-6	PD39499
024-03359-001	HRP2	528N-8	PD39499
024-03360-003	HRP3V	52KAAW13SPN	PD39500
024-03379-000	HRP4V	52KATF09SPN	PD39500
024-03379-001	HRP5V	52KBAW13BPN	PD39501
024-03379-002	HRPV4S4FF	52KBAW13SPN	PD39501
024-03398-000	HRPV4S8A	52KBAW13SVN	PD39502
024-03399-000	HRPV4S8FF	52KBAW17SPN	PD39502
024-03399-001	HRPV4S8M8F	52KBAW17SVN	PD39502
024-03399-002	HRPVG4S8M8F	52KBAW21SENS	PD39502
024-03400-000	HRS10X1LZ4X	52KBAW21SPN	PD39503
024-03400-001	HS-03	52KBAW21SVN	PD39503
024-03401-000	HS-05	52KBIW13BPN	PD39503
024-03401-001	HS-08	52KBIW13SEN	PD39503
024-03401-003	HS08X1TNCFX	52KBIW13SKN	PD39504
024-03408-0	HS1/2TN1CFX	52KBIW13SPN	PD39504
024-03408-000	HS1/4TN1CFX	52KBIW13SVN	PD39506
024-03408-017	HS1/8TN1CFX	52KBIW17SPN	PD39506
024-03421-002	HS1/8TNWEISHCFLX	52KBIW17SPNS_03	PD39508
024-03422-000	HS10X1TN1CFX	52KBIW17SVN	PD39508
024-03422-500	HS-12	52KBIW21SPN	PD39510

024-03435-000	HS12X1.5TN1CFX	52KBIW21SVN	PD39510
024-03435-003	HS14X1.5TN1CFX	52KBTF06SPN	PD39516-0033
024-03436-000	HS-16	52KBTF09SPN	PD39516-0033
024-03439-005	HS16X1.5TN1CFX	52KBTF09SVN	PD39516-0233
024-03484-000	HS18X1.5TN1CFX	52KBTF10SPN	PD39516-0233
024-03485-0	HS-20	52KBTF11SPN	PD39526-0010
024-03485-000	HS20X1.5TN1CFX	52KBTF13SPN	PD39526-0010
024-03485-001	HS22X1.5TN1CFX	52KFAW17SPN	PD39526-0025
024-03485-003	HS26X1.5TN1CFX	52KFAW21SPN	PD39526-0025
024-03499-000	HS3/4TN1CFX	52KFTF09SPN	PD39541-3
024-03508-0	HS3/8SW24TN1CFX	52R326RA	PD39541-3
024-03508-009	HS3/8TN1CFX	52R326RA	PD39572
024-03517-003	HS3PK4	52SBAW13BPN	PD39572
024-03520-000	HS3PK6	52SBAW13SPN	PD39576
024-03527-000	HS3PK8	52SBAW17SEN	PD39576
024-03528-000	HS4TFI5/16-0TC-100	52SBAW17SPN	PD39670
024-03528-001	HSRS25	52SBAW21SPN	PD39670
024-03529-000	HSRS30	52SBIM14SPNS	PD39710
024-03530-002	HSRS35	52SBIW13SEN	PD39710
024-03531-000	HSRS38	52SBIW13SKN	PD39729-1733
024-03564-0	HSRS42	52SBIW13SPN	PD39729-1733
024-03564-000	HSRS50	52SBIW17SPN	PD39763
024-03564-001	HSRS60	52SBIW21SPN	PD39763
024-03564-003	HST-912	52SBTF06SPN	PD39764
024-03566-000	HST-912A	52SBTF08SPN	PD39764
024-03583-000	HST-912ATW	52SBTF09SPN	PD39819
024-03600-000	HST-912TW	52SBTF10SPN	PD39819
024-03611-000	HSTC12	52SBTF13SPN	PD39841
024-03611-003	HSTC4	52SFAW10SXN	PD39841
024-03623-003	HSTC6	52SFAW13SXN	PD39898-0025
024-03639-000	HSTC9	52SFAW17SXN	PD39898-0025
024-03640-0	HSTD12	52SFAW21SXN	PD39915
024-03644-000	HSTD4	52SFIW10SXN	PD39915
024-03811-000	HSTD6	52SFIW13SXN	PD39917
024-11334-0	HSTD9	52SFIW17SXN	PD39917
024-11334-003	HST-S	52SFIW21SXN	PD39946-0020
024-11556-000	HSUBD-9VM	52SFTF06SXN	PD39946-0020
024-25500-000	HTB-A	52SFTF09SXN	PD39952-0025
024-25500-003	HUM-10-BLU-0100	52SFTF11SXN	PD39952-0025
024-25500-004	HUM-12-BLU-0100	52SFTF13SXN	PD39976-0005
024-25505-003	HUM-6-BLU-0100	53004L-100	PD39976-0005
024-25506-0	HUM-8-BLU-0100	53004L-100	PD40074-0320
024-25506-000	HUM-8-BLU-0250	53004L-198	PD40074-0320
024-25506-001	HV343-02-FL	53004L-198	PD40093-0233-92
024-25515-000	HV4400-15	53004L-300R	PD40093-0233-92
024-25515-001	HV4400-15	53004L-300R	PD40128-0125EN
024-25515-002	HVG4400-15	53004P-5KIT	PD40128-0125EN
024-25515-003	HVG4400-15	53004P-5KIT	PD40160
024-25525-0	HVMBKPLX	5300-50-01550-0000-000000	PD40160
024-25525-000	HVMRA064Z06VHT	5300-50-01550-0000-000000	PD40201
024-25548-001	HVMRA160A06VHT	53007S	PD40201
024-25576-003	HVMRA160Z06VHT	53007S	PD40209-0025
024-25577-003	HVN4200-8	53007V	PD40209-0025

024-25683-0	HVN4200-8	53007V	PD40216-0050-0050
024-25683-000	HVN4400-10	531N03	PD40216-0050-0050
024-25684-0	HVN4400-10	531N03	PD40216-0075-0370
024-25684-003	HW 14-SS	5320P0004	PD40216-0075-0370
024-25684-013	HW420BKR1500	5335W	PD40216-0080-0125
024-25685-001	HW930CIR1300	5381-PP	PD40216-0080-0125
024-25687-000	HX320BTR7000	53DM-10	PD40216-0175-0175
024-25687-003	HX420CWR6000	53DM-6	PD40216-0175-0175
024-25703-000	HX620CWR6500	53DM-8	PD40229
024-25707-000	HX840DHR7300	5-4 B2HF-SS	PD40229
024-25707-001	HX840VHR9000	5-4 C5OX-S	PD40249-0025-0180
024-25709-000	HX850DER6301	5-4 CBU-S	PD40249-0025-0180
024-25709-003	HX850VER9301	5-4 CBZ-SS	PD40249-0035-0035
024-25709-014	HX850VER9303	5-4 CTX-S	PD40249-0035-0035
024-25733-000	HXA40VER9300	5-4 DBZ-SS	PD40249-0050-0050
024-25735-000	HY-FER-SET KIT-A	5-4 DTX-S	PD40249-0050-0050
024-25735-503	HY-FER-SET KIT-B	5-4 F5OX-S	PD40249-0495-0600
024-25737-000	HY-FER-SET RAM	5-4 F6X-S	PD40249-0495-0600
024-25737-002	HY-FER-SET RAM2	5-4 FBU-S	PD40261-0010
024-25738-000	HZ10C2	5-4 FBZ-SS	PD40261-0010
024-25742-000	HZ10C2	5-4 FH4BZ-SS	PD40267-0100
024-25746-000	IB10000-PSN	5-4 FTX-B	PD40267-0100
024-25746-003	IB10000-PSN	5-4 FTX-S	PD40267-0200
024-25761-000	IB10000-PSV	5-4 GBZ-SS	PD40267-0200
024-25761-003	IB10010	5-4 GTX-S	PD40269-0150
024-25762-001	IB10010	5-4 HBZ-SS	PD40269-0150
024-25772-000	IB10010 H	5-4 T2HF-SS	PD40322
024-25772-002	IB10010 H	5-4 TRBZ-SS	PD40322
024-25772-003	IB10011	5-4 VTX-S	PD40351-0025-0050
024-25772-004	IB10011	5400-50-00250-0000-000000	PD40351-0025-0050
024-25772-006	IB10011 H	5400-50-00250-0000-000000	PD40351-0040-0040
024-25776-0	IB10016	5400-50-00360-0000-000000	PD40351-0040-0040
024-25776-000	IB10016	5400-50-00360-0000-000000	PD40351-0055-0110
024-25778-000	IB10020	5400-50-00750-0000-000000	PD40351-0055-0110
024-25778-003	IB10020	5400-50-00750-0000-000000	PD40351-0070-0080
024-25779-000	IB10021	5400-50-01000-0000-000000	PD40351-0070-0080
024-25781-000	IB10021	5400-50-01000-0000-000000	PD40351-0125-0080
024-25781-003	IB10026	5400-50-01200-0000-000000	PD40351-0125-0080
024-25782-0	IB10026	5400-50-01200-0000-000000	PD40354-0030-0130
024-25782-000	IB2500-PSN	5400-50-01250-0000-000000	PD40354-0030-0130
024-25782-001	IB2500-PSN	5400-50-01250-0000-000000	PD40354-0130-0130
024-25783-000	IB2500-PSV	5400-50-01600-0000-000000	PD40354-0130-0130
024-25785-000	IB2500-PSV	5400-50-01600-0000-000000	PD40354-0280-0320
024-25785-003	IB2510	5400-50-01800-0000-000000	PD40354-0280-0320
024-25788-000	IB2510	5400-50-01800-0000-000000	PD40357-0025-0025
024-25788-001	IB2510 V	5400-50-02000-0000-010000	PD40357-0025-0025
024-25789-0	IB2510 V	5400-50-02000-0000-010000	PD40357-0050-0275
024-25789-000	IB2511	5400-50-02000-0000-010090	PD40357-0050-0275
024-25792-003	IB2511	5400-50-02000-0000-010090	PD40357-0070-0070
024-25800-000	IB2511 V	5409U	PD40357-0070-0070
024-25808-000	IB2516	540N-12	PD40357-0080-0100
024-25809-000	IB2516	540N-2	PD40357-0080-0100
024-25809-001	IB2520	540N-3	PD40357-0080-0160

024-25809-002	IB2520	540N-4	PD40357-0080-0160
024-25810-000	IB2520 V	540N-4-4	PD40357-0090-0200
024-25811-001	IB2520 V	540N-4-4-DL	PD40357-0090-0200
024-25825-001	IB2521	540N-5	PD40357-0140-0210
024-25826-0	IB2521	540N-6	PD40357-0140-0210
024-25827-000	IB2521 V	540N-6-DL	PD40360-0025-0450
024-25827-001	IB2521 V	540N-8	PD40360-0025-0450
024-25828-0	IB2526	540N-8-DL	PD40360-0040-0080
024-25829-000	IB2526	540P-8-8	PD40360-0040-0080
024-25844-000	IB3800-PSN	541L01	PD40360-0050-0050
024-25845-0	IB3800-PSN	541L01	PD40360-0050-0050
024-25845-000	IB3800-PSV	541L9101	PD40360-0050-0300
024-25850-503	IB3810	541L9101	PD40360-0050-0300
024-25868-0	IB3810	541N01	PD40361
024-25868-002	IB3810 V	541N01	PD40361
024-25886-000	IB3810 V	541N03	PD40363-0320
024-25895-000	IB3811	541N03	PD40363-0320
024-25900-000	IB3811	5440.12	PD40369
024-25904-000	IB3816	5440.14	PD40369
024-25904-001	IB3816	54441R	PD40372
024-25904-501	IB3820	54441R	PD40372
024-25910-000	IB3820	54442R	PD40372
024-25938-000	IB3820 V	54442R	PD40372
024-25946-000	IB3820 V	54444R	PD40381-0233
024-25946-003	IB3821	54444R	PD40381-0233
024-25947-000	IB3821	5445Q	PD40390
024-25958-000	IB3826	5-4-5 RBZ-SS	PD40390
024-25964-016	IB3826	5463N	PD40390
024-25967-000	IB5000-PSN	5475F	PD40390
024-25967-001	IB5000-PSN	5477B	PD40391
024-25967-503	IB5010	5-4C3MXS	PD40391
024-25969-0	IB5010	5-4C3MXSS	PD40391
024-25969-000	IB5010 H	5-4C4OMXS	PD40391
024-26007-000	IB5010 H	5-4C4OMXSS	PD40392
024-26012-000	IB5010 V	5-4C4OMXSV	PD40392
024-26030-000	IB5010 V	5-4CMTXSS	PD40392
024-26041-002	IB5011	5-4F3MXS	PD40392
024-26048-000	IB5011	5-4F3MXSS	PD40393
024-26050-001	IB5011 H	5-4F42EDMXS	PD40393
024-26059-000	IB5011 V	5-4F42EDMXSS	PD40393
024-26071-0	IB5016	5-4F42EDMXSV	PD40393
024-26071-000	IB5016	5-4F4OMXS	PD40394
024-26092-003	IB5020	5-4F4OMXSV	PD40394
024-26122-003	IB5020	5-4F5OMXS	PD40395
024-26125-003	IB5020 V	5-4F63MXS	PD40395
024-26130-0	IB5020 V	5-4F642EDMXS	PD40395
024-26161-000	IB5021	5-4F642EDMXSS	PD40395
024-26164-002	IB5021	5-4F64OMXS	PD40396
024-26165-000	IB5026	5-4F64OMXSS	PD40396
024-26168-002	IB5026	5-4F64OMXSV	PD40396
024-26198-003	IB7500-PSN	5-4F6MXSS	PD40396
024-26199-503	IB7500-PSN	5-4FMTXS	PD40397
024-26200-0	IB7510	5-4FMTXSS	PD40397

024-26203-000	IB7510	5-4G4MXS	PD40397
024-26210-002	IB7510 H	5-4G4MXSMO	PD40397
024-26222-000	IB7510 H	5-4GMTXSS	PD40457-2000
024-26236-003	IB7510 V	5-4HMTXSS	PD40457-2000
024-26237-000	IB7510 V	5-4K6PP4MXS	PD40470-0233
024-26250-0	IB7511	5-4R6O4MXS	PD40470-0233
024-26256-000	IB7511	5-4R6P4MXS	PD40497-0180
024-26259-000	IB7511 H	54R826RA1	PD40497-0180
024-26260-000	IB7516	54R826RA1	PD40501
024-26264-000	IB7516	5-4RHV42EDMXS0.2BCF	PD40501
024-26267-000	IB7520	5-4TRMTXS	PD40504
024-26267-003	IB7520	5-4TRMTXSS	PD40504
024-26267-500	IB7520 V	5-4V3MXS	PD40506
024-26287-003	IB7520 V	5-4V4OMXS	PD40506
024-26304-003	IB7521	5-5 EBZ-SS	PD40510
024-26322-000	IB7521	5-5 HBZ-SS	PD40510
024-26327-003	IB7526	5-5 WBZ-SS	PD40570
024-26335-0	IB7526	5-5 ZHBA5-SS	PD40570
024-26375-0	IBS3000	5500-PSN	PD40610-0050
024-26375-011	IBS3100	5501B	PD40610-0050
024-26412-0	IBTT-CAN	5501B-023-000	PD40650-0140
024-26413-000	IBTT-CAN-S2	55044700-D	PD40650-0140
024-26415-003	IC465499	5505012/A811134	PD40663-0133
024-26419-000	IC465501	5505012/A811134	PD40663-0133
024-26437-000	ICP600S19M	55074405-D	PD40663-0233
024-26438-0	ICP600S3M	55077803-D	PD40663-0233
024-26460-000	IDB50	55080600-D	PD40663-5733
024-26469-003	IDB50	55085601-D	PD40663-5733
024-26469-017	IDH50	55085709-D	PD40663-6133
024-26517-0	IDH50	550H-10	PD40663-6133
024-26517-003	IDP50	550H-12	PD40664-0233
024-26517-017	IDP50	550H-12-DL	PD40664-0233
024-26526-0	IF10000-PSN	550H-16	PD40664-5733
024-26528-013	IF10000-PSN	550H-3	PD40664-5733
024-26535-0	IF10000-PSPU	550H-3-3	PD40665-0033
024-26535-001	IF10000-PSV	550H-4	PD40665-0033
024-26559-000	IF10000-PSV	550H-4-4	PD40665-0133
024-26600-000	IF10010	550H-4-4-4	PD40665-0133
024-26600-002	IF10010	550H-5	PD40665-5733
024-26603-000	IF10010 RV	550H-5-5	PD40665-5733
024-26603-002	IF10010-125	550H-5-5-5	PD40666-0233
024-26629-000	IF10010-125	550H-5-DL	PD40666-0233
024-26629-002	IF10010-125RV	550H-5-RL	PD40666-5733
024-26629-500	IF10010-125RV	550H-6	PD40666-5733
024-26638-0	IF10011	550H-6-6	PD40720-2820
024-26648-0	IF10011	550H-6-DL	PD40720-2820
024-26648-000	IF10016	550H-8	PD40739-5733
024-26672-0	IF10016	550H-8-DL	PD40739-5733
024-26680-000	IF10020	5510FIL	PD40740-5733
024-26681-000	IF10020	5510FIL	PD40740-5733
024-26682-000	IF10020 RV	5515-QC	PD40748-0075
024-26693-500	IF10020-125	5517.1	PD40748-0075
024-26708-000	IF10020-125	55206V4A	PD40757

024-26711-000	IF10020-125RV	55206W	PD40757
024-26712-000	IF10020-125RV	55256W	PD40761
024-26713-000	IF10021	5538H	PD40761
024-26714-000	IF10021	5-5-4 SBZ-SS	PD40762
024-26715-000	IF10021-125	5541U	PD40762
024-26718-000	IF10021-125	5-5-5 JBZ-SS	PD40763-0025
024-26741-000	IF10026	5571.2	PD40763-0025
024-26741-001	IF10026	5-585-V894-9	PD40765-0040
024-26741-501	IF2310	5589-200	PD40765-0040
024-26753-000	IF2310	5589-200	PD40767-0025
024-26762-002	IF2320	55LT-3	PD40767-0025
024-26770-001	IF2320	55LT-4-4	PD40767-0160
024-26772-0	IF2500-PSN	55LT-5	PD40767-0160
024-26800-500	IF2500-PSN	55LT-5-5	PD40802
024-26801-000	IF2500-PSPU	55LT-6	PD40802
024-26801-002	IF2500-PSPU	55LT-6-6	PD40808-0233
024-26801-003	IF2500-PSV	55LT-8	PD40808-0233
024-26839-000	IF2510	55-P-19	PD40808-4533ATEX
024-26841-000	IF2510	55-P-20-1	PD40808-4533ATEX
024-26842-002	IF2510 E	55-P-20-2	PD40813-0233
024-26843-000	IF2510 E	55-P-20-3	PD40813-0233
024-26846-000	IF2510 RV	55-P-6-1	PD40814-0233
024-26846-001	IF2510 RV	55-P-6-2	PD40814-0233
024-26846-002	IF2510 V	55PG-6	PD40841-0033
024-26847-0	IF2510 V	55SG-3	PD40841-0033
024-26847-000	IF2511	55SG-4	PD40841-0233
024-26852-015	IF2511	55SG-8	PD40841-0233
024-26857-0	IF2516	55SSG-6	PD40844
024-26857-000	IF2516	5-6 C5OX-S	PD40844
024-26858-000	IF2520	5-6 CBZ-SS	PD40844
024-26861-000	IF2520	5-6 CTX-S	PD40844
024-26861-002	IF2520 RV	5-6 F5OX-S	PD40845
024-26863-001	IF2520 RV	5-6 FBZ-SS	PD40845
024-26868-000	IF2520 V	5-6 GBZ-SS	PD40845
024-26875-000	IF2520 V	560-12	PD40845
024-26877-000	IF2521	560-3	PD40846
024-26910-0	IF2521	560-4	PD40846
024-26923-0	IF2526	560-5	PD40847
024-26924-000	IF2526	560-6	PD40847
024-26924-500	IF-2A-BASE-2P-SS	56074-00730	PD40847
024-26941-0	IF-2F-BASE-1P-SS	56074-00730	PD40847
024-26946-000	IF-2F-END-SS	56074-05900	PD40848
024-26960-0	IF-2F-TOP-SS	56074-05900	PD40848
024-26960-002	IF3800-PSN	56075-01300	PD40849
024-26970-001	IF3800-PSN	56075-01300	PD40849
024-26971-000	IF3800-PSPU	56075-01550	PD40849
024-26979-000	IF3800-PSPU	56075-01550	PD40849
024-26990-000	IF3800-PSV	56075-02750	PD40853
024-26990-003	IF3800-PSV	56075-02750	PD40853
024-26992-000	IF3810	56075-02800	PD40911
024-26993-000	IF3810	56075-02800	PD40911
024-26998-006	IF3810 E	560-8	PD40968-0033
024-30011-000	IF3810 E	560-8-8	PD40968-0033

024-30122-000	IF3810 EM	56150FIL	PD40968-0233
024-31001-001	IF3810 RV	56150FIL	PD40968-0233
024-31002-0	IF3810-50	56154FIL	PD40968-6133
024-31002-000	IF3810-50	56154FIL	PD40968-6133
024-31004-000	IF3810-50RV	56164FIL	PD40980
024-31012-0	IF3810-50RV	56164FIL	PD40980
024-31012-000	IF3810-50V	56165FIL	PD40982
024-31012-003	IF3810-50V	56165FIL	PD40982
024-31012-028	IF3811	56350FIL	PD40995
024-31019-000	IF3811	56350FIL	PD40995
024-31019-002	IF3811 V	56351FIL	PD40996-0233
024-31019-500	IF3811-50	56351FIL	PD40996-0233
024-31020-000	IF3811-50	56352FIL	PD40996-6133
024-31020-003	IF3816	56352FIL	PD40996-6133
024-31020-006	IF3816	56353FIL	PD41016
024-31026-000	IF3820	56353FIL	PD41016
024-31050-000	IF3820	56354FIL	PD41017
024-31054-002	IF3820 E	56354FIL	PD41017
024-31077-000	IF3820 E	56355FIL	PD41019
024-31087-000	IF3820 RV	56355FIL	PD41019
024-31115-000	IF3820-50	56356FIL	PD41043
024-31118-001	IF3820-50	56356FIL	PD41043
024-31137-0	IF3820-50RV	56400FIL	PD41053
024-31138-000	IF3820-50RV	56400FIL	PD41053
024-31139-000	IF3820-50V	56401FIL	PD41076-0050
024-31140-000	IF3820-50V	56401FIL	PD41076-0050
024-31141-000	IF3821	56402FIL	PD41085
024-31153-000	IF3821	56402FIL	PD41085
024-31196-002	IF3821 E	56403FIL	PD41125
024-31208-000	IF3821 E	56403FIL	PD41125
024-31236-000	IF3821-50	56405FIL	PD41126
024-31237-001	IF3821-50	56405FIL	PD41126
024-31242-0	IF3826	56410FIL	PD41183
024-31242-000	IF3826	56410FIL	PD41183
024-31246-000	IF469444	56412FIL	PD41283-0170
024-31247-001	IF-4F-BASE-1P-SS	56412FIL	PD41283-0170
024-31248-000	IF5000-PSN	56413FIL	PD41293
024-31253-000	IF5000-PSN	56413FIL	PD41293
024-31254-0	IF5000-PSPU	56414FIL	PD41298-0250
024-31254-000	IF5000-PSPU	56414FIL	PD41298-0250
024-31258-000	IF5000-PSV	56415FIL	PD41298-0300
024-31259-000	IF5000-PSV	56415FIL	PD41298-0300
024-31260-0	IF5010	56417FIL	PD41314
024-31260-000	IF5010	56417FIL	PD41314
024-31340-000	IF5010 E	56418FIL	PD41346
024-31357-000	IF5010 E	56418FIL	PD41346
024-31358-0	IF5010 ERV	56419FIL	PD41478
024-31360-000	IF5010 RV	56419FIL	PD41478
024-31422-000	IF5010 V	56421FIL	PD41478
024-31433-000	IF5010 V	56421FIL	PD41478
024-31436-0	IF5010-75	56423FIL	PD41479
024-31442-0	IF5010-75	56423FIL	PD41479
024-31455-0	IF5010-75RV	56425FIL	PD41480

024-31468-000	IF5010-75RV	56425FIL	PD41480
024-31497-001	IF5011	56433FIL	PD41480
024-31568-007	IF5011	56433FIL	PD41480
024-31601-000	IF5011-75	56437FIL	PD41481
024-31610-000	IF5011-75	56437FIL	PD41481
024-31642-000	IF5016	56439FIL	PD41481
024-31655-000	IF5016	56439FIL	PD41481
024-31656-000	IF501990	56440FIL	PD41482
024-31665-0	IF5020	56440FIL	PD41482
024-31682-000	IF5020	56441FIL	PD41483
024-31693-000	IF5020 RV	56441FIL	PD41483
024-31697-000	IF5020 UNF	56457FIL	PD41483
024-31715-000	IF5020 V	56457FIL	PD41483
024-31726-012	IF5020 V	56459FIL	PD41487
024-31727-0	IF5020-75	56459FIL	PD41487
024-31750-000	IF5020-75	56470FIL	PD41490
024-31769-000	IF5020-75RV	56470FIL	PD41490
024-31783-002	IF5020-75RV	56478FIL	PD41540
024-31791-000	IF5020-75UNF	56478FIL	PD41540
024-31800-015	IF5021	56497FIL	PD41552-0030
024-31806-001	IF5021	56497FIL	PD41552-0030
024-31816-000	IF5021 E	56499FIL	PD41572
024-31820-000	IF5021 E	56499FIL	PD41572
024-31820-002	IF5021-75	56500FIL	PD41573
024-31820-022	IF5021-75	56500FIL	PD41573
024-31827-0	IF5026	56504FIL	PD41583-0025
024-31850-000	IF5026	56504FIL	PD41583-0025
024-31851-003	IF6300-PSN	56543FIL	PD41584-0050
024-31856-000	IF6300-PSN	56543FIL	PD41584-0050
024-31861-000	IF6300-PSPU	56549FIL	PD41584-0220
024-31864-000	IF6310	56549FIL	PD41584-0220
024-31894-000	IF6310	56550FIL	PD41585-0080
024-31895-000	IF6310 E	56550FIL	PD41585-0080
024-31896-0	IF6310 E	56626FIL	PD41876-0108
024-31897-0	IF6310 RV	56626FIL	PD41876-0108
024-31898-0	IF6310 RV	5696U-023-00X	PD41877-0080
024-31899-000	IF6316	569FIL	PD41877-0080
024-31901-000	IF6316	569FIL	PD41912
024-31902-000	IF6320	5-6C4OMXS	PD41912
024-31906-000	IF6320	56C8-6F	PD41956-0040
024-31919-000	IF6320 RV	56C8-8F	PD41956-0040
024-31931-000	IF6320 RV	5-6CMTXSS	PD41970
024-31931-001	IF6321	5-6F42EDMXS	PD41970
024-31931-501	IF6321	5-6F42EDMXSS	PD41972
024-31932-001	IF6326	5-6F42EDMXSV	PD41972
024-31933-003	IF6326	5-6F4OMXS	PD41973
024-31934-001	IF7500-PSN	5-6FMTXS	PD41973
024-31934-014	IF7500-PSN	5-6FMTXSS	PD41974
024-31936-000	IF7500-PSPU	56N8-8F	PD41974
024-31936-003	IF7500-PSPU	5701/3	PD41975
024-31937-001	IF7500-PSV	5703-2	PD41975
024-31937-004	IF7500-PSV	5719D-023-00C	PD42010-0033
024-31941-000	IF7510	5720U	PD42010-0033

024-31951-000	IF7510	5730R	PD42098
024-31962-0	IF7510 E	5739Y	PD42098
024-31966-000	IF7510 E	5751FIL	PD42100
024-31967-000	IF7510 RV	5751FIL	PD42100
024-31967-031	IF7510-100	57653-02750	PD42124
024-31982-000	IF7510-100	57653-02750	PD42124
024-31982-002	IF7511	57653-03050	PD42348-0050
024-31982-5	IF7511	57653-03050	PD42348-0050
024-33004-0	IF7516	57654-02750	PD42380
024-33004-000	IF7516	57654-02750	PD42380
024-33004-001	IF7520	57654-03050	PD42380ATEX
024-33004-003	IF7520	57654-03050	PD42380ATEX
024-33006-000	IF7520 RV	57656-02750	PD42405
024-33071-001	IF7520-100	57656-02750	PD42405
024-33075-0	IF7520-100	57656-03050	PD42451
024-33080-000	IF7521	57656-03050	PD42451
024-33082-000	IF7521	5770D	PD42452
024-33119-000	IF7526	57KBAW21BPN	PD42452
024-33149-502	IF7526	57KBAW21BVN	PD42453
024-33166-500	IF-B2LJ2-V-SS	57KBAW26BPN	PD42453
024-33195-000	IF-CO4L-1/3-V-SS	57KBAW26BVN	PD42453
024-33195-003	IF-CO4L-1-V-SS	57KBAW33BPN	PD42453
024-33205-0	IF-CONNECTOR-1-V-SS	57KBIW21BPN	PD42454
024-33217-000	IF-CONNECTOR-2-V-SS	57KBIW21BVN	PD42454
024-33253-000	IF-CONNECTOR-EPR-SS	57KBIW26BPN	PD42455
024-33305-000	IF-CONNECTOR-V-SS	57KBIW26BVN	PD42455
024-33307-0	IF-E-A12B0-SS	57KBIW33BPN	PD42456
024-33307-000	IF-E-A1B2-SS	57KBTF16BPN	PD42456
024-33308-000	IF-E-A1B4-SS	57KBTF19BPN	PD42468
024-33316-000	IF-E-SPACER-SS	57KBTF19BVN	PD42468
024-33328-0	IF-FR3-V-P99-SS	57SBAW17MPN	PD42483
024-33329-000	IF-FT4-1-SS	57SBAW21MPN	PD42483
024-33335-003	IF-FT4-5-SS	57SBAW26MPN	PD42516
024-33342-001	IF-H5L-V-SS-K	57SBAW33MPN	PD42516
024-33357-000	IF-HNV-SS	57SBIW21MPN	PD42581
024-33358-000	IF-JUMPER-SS	57SBIW21MVN	PD42581
024-33393-000	IF-O-RING-50-EPR	57SBIW26MPN	PD42640-0233
024-33396-0	IF-O-RING-50-V	57SBTF13MVN	PD42640-0233
024-33396-001	IF-PEGBOARD-6X10-SS	57SBTF19MPN	PD42985-0280
024-33422-002	IF-PEGBOARD-6X6-SS	57SFAW17SXN	PD42985-0280
024-33424-000	IF-PEGBOARD-8X8-SS	57SFAW21SXN	PD43000-0025
024-33428-000	IF-PN2-EPR-NC-SS	57SFAW21SXNS	PD43000-0025
024-33443-000	IF-PN2-EPR-NO-SS	57SFAW26SXN	PD43000-0030
024-33443-003	IF-PN2-V-NC-SS	57SFAW33SXN	PD43000-0030
024-33444-013	IF-RD2K-V-SS	57SFIW21SXN	PD43056-0160
024-33447-000	IF-S-A13B0-SS	57SFIW21SXNS	PD43056-0160
024-33471-001	IF-S-A1B0-SS	57SFIW26SXN	PD43061-0070
024-33476-000	IF-S-A1B3-SS	57SFTF13SXN	PD43061-0070
024-33487-0	IF-SUPPORT-PGBRD-SS	57SFTF16SXN	PD43081
024-33525-0	IF-SUPPORT-TOP-SS	57SFTF19SXN	PD43081
024-33544-000	IFSYSKIT	5-8 F5OX-S	PD43195-2800
024-33548-003	IF-T-A13B2-SS	5-8 FBZ-SS	PD43195-2800
024-33555-000	IF-T-A1B24-SS	580N-12	PD43238

024-33556-000	IF-TL-A1B34-SS	580N-16	PD43238
024-33584-000	IF-TR-A1B23-SS	580N-4	PD43295-0133
024-33585-000	IH00450000	580N-6	PD43295-0133
024-33595-002	IH00450001	580N-8	PD43329
024-33601-003	IH00450003	5811FIL	PD43329
024-33615-003	IH11001300/15-R90	5811FIL	PD43417
024-33615-504	IH11001345/15-R90	5812FIL	PD43417
024-33630-000	IH30116500/40	5812FIL	PD43423
024-33632-0	IH30116501/40	5812-SA	PD43423
024-33649-000	IH30116502/40	5813FIL	PD43424
024-33657-000	IH30116504/40	5813FIL	PD43424
024-33658-0	IH30135002/100	5814FIL	PD43425
024-33661-000	IH30136005/100	5814FIL	PD43425
024-33679-0	IH30136010/80	5816FIL	PD43490
024-33679-000	IH30240051/40	5816FIL	PD43490
024-33680-000	IH30240052/40	5820-50-00225-0000-000000	PD43606
024-33684-000	IH30310128/100	5820-50-00225-0000-000000	PD43606
024-33692-000	IH30315102/80	5820-50-00400-0000-000000	PD43640-0160
024-33699-000	IH30315103/40	5820-50-00400-0000-000000	PD43640-0160
024-33699-001	IH30315115/40	5820-50-00530-0000-000000	PD43655
024-33703-000	IH30315116/40	5820-50-00530-0000-000000	PD43655
024-33706-0	IH30315117/40	5820-50-00880-3010-000000	PD43680-0600
024-33706-000	IH30315122/40	5820-50-00880-3010-000000	PD43680-0600
024-33708-000	IH30351200/40	5820-50-01000-0000-000000	PD43701
024-33714-001	IH30351201/40	5820-50-01000-0000-000000	PD43701
024-33753-002	IH30351202/40	5820-50-01300-0000-000000	PD43996
024-33784-000	IH30351203/40	5820-50-01300-0000-000000	PD43996
024-33801-000	IH30351204/40	5820-50-01400-0000-000000	PD43996
024-33820-000	IH30351250/40	5820-50-01400-0000-000000	PD43996
024-33820-003	IH30351251/40	5822-00720	PD43998
024-33820-014	IH30351252/40	5822-00720	PD43998
024-33840-002	IH30351253/40	5822-00800	PD43999
024-33888-003	IH30351254/40	5822-00800	PD43999
024-33902-000	IH30351255/40	5822-01000	PD43999
024-33907-000	IH30351256/40	5822-01000	PD43999
024-33907-5	IH30351274/40	5822-01200	PD44000
024-33907-500	IH30401106/40	5822-01200	PD44000
024-33910-003	IH30401107/40	5822-01500	PD44001
024-33916-000	IH30401108/100	5822-01500	PD44001
024-33918-000	IH30401111/40	5822-01800	PD44001
024-33994-000	IH30401112/100	5822-01800	PD44001
024-33998-0	IH30412703/40	5822-02500	PD44002
024-40006-013	IH30412706/40	5822-02500	PD44002
024-40036-000	IH30412707/40	5823-00720	PD44005
024-40044-000	IH30412716/100	5823-00720	PD44005
024-40082-000	IH30412716/40	5823-00800	PD44008
024-40085-000	IH30412803/40	5823-00800	PD44008
024-40098-003	IH30412914/100	5823-01000	PD44010
024-40103-0	IH30412940/40	5823-01000	PD44010
024-40112-000	IH30412941/40	5823-01295	PD44011
024-40123-0	IH30412960/40	5823-01295	PD44011
024-40131-0	IH30412962/40	5823-01500	PD44012
024-40131-003	IH30412964/40	5823-01500	PD44012

024-40132-0	IH30413220/40	5825-00565	PD44073-0097
024-40132-013	IH30413221/40	5825-00565	PD44073-0097
024-40240-000	IH30413456/100	5825-00700	PD44087
024-40240-002	IH30413457/100	5825-00700	PD44087
024-40244-001	IH30413458/100	5825-00750	PD44146
024-40256-0	IH30413459/100	5825-00750	PD44146
024-40275-500	IH30501001/100	5825-01200	PD44147-0040
024-40282-010	IH30501002/100	5825-01200	PD44147-0040
024-40369-0	IH30501003/100	5825-01250	PD44176-0100
024-40369-000	IH30501004/100	5825-01250	PD44176-0100
024-40396-0	IH30501006/40	5825-01600	PD44264-0233
024-40396-000	IH30501007/50	5825-01600	PD44264-0233
024-40396-002	IH30502001/100	5825-02400	PD44277
024-40396-500	IH30502002/100	5825-02400	PD44277
024-40407-000	IH30502003/100	5826-00565	PD44293-0180
024-40409-500	IH30502407/50	5826-00565	PD44293-0180
024-40418-000	IH30502420/90	5826-00700	PD44381
024-40439-000	IH30502421/80	5826-00700	PD44381
024-40459-000	IH30511002/100	5826-00750	PD44382
024-40466-000	IH30511003/100	5826-00750	PD44382
024-40472-000	IH30511004/100	5826-01200	PD44382
024-40478-000	IH30511049/100	5826-01200	PD44382
024-40578-002	IH30511051/100	5826-01250	PD44383
024-40590-001	IH30511053/80	5826-01250	PD44383
024-40593-007	IH30511054/80	5826-01600	PD44384
024-40594-001	IH30511055/50	5826-01600	PD44384
024-40594-012	IH30511057/100	5831FIL	PD44385
024-40602-003	IH30511058/50	5831FIL	PD44385
024-40602-503	IH30512006/100	5835B	PD44385
024-40653-000	IH30512007/40	5843FIL	PD44385
024-40653-503	IH30512010/40	5843FIL	PD44386
024-40654-000	IH30515031/80	5844FIL	PD44386
024-40665-024	IH30515040/80	5844FIL	PD44386
024-40691-000	IH30515042/100	5850-50-00290-0000-000000	PD44386
024-40723-017	IH30515043/100	5850-50-00290-0000-000000	PD44489
024-40732-0	IH30515045/100	5860C	PD44489
024-40732-000	IH30515046/100	5884.10	PD44490
024-40733-000	IH30551600/100	5887.1.P	PD44490
024-40737-0	IH30810130/40	588N-10	PD44491
024-40737-000	IH30810132/40	588N-12	PD44491
024-40756-031	IH30810133/40	588N-16	PD44492
024-40776-000	IH30831300/40	588N-16-DL	PD44492
024-40787-000	IH30831302/40	588N-4	PD44494
024-40856-000	IH30831303/40	588N-6	PD44494
024-40884-014	IH30831305/40	588N-8	PD44498-0233-92
024-40892-000	IH30832000/40	58FIL	PD44498-0233-92
024-40897-0	IH30832001/40	58FIL	PD44537
024-40897-000	IH30832002/40	5-8G4MXSMO	PD44537
024-40909-000	IH30832003/40	590-000073-001	PD44652-1600
024-40909-001	IH30832004/40	590-000106-001	PD44652-1600
024-40909-002	IH30832005/40	5901/1	PD44656
024-40912-0	IH30832006/40	590-10	PD44656
024-40912-000	IH30832031/40	590-12	PD44658

024-40912-002	IH30832032/40	590126-10	PD44658
024-40936-000	IH30832033/40	590126-12	PD44660
024-40944-028	IH30832034/40	590126-4	PD44660
024-40959-000	IH30832035/40	590126-6	PD44671-0480
024-40993-000	IH30832036/40	590126-8	PD44671-0480
024-40993-002	IH30832037/40	590-16	PD44692
024-44004-500	IH30832038/40	590-4	PD44692
024-44007-000	IH30836101/40	590-6	PD44698
024-44013-000	IH30836103/40	590-6-6	PD44698
024-44017-000	IH30836104/40	590-6-DL	PD44705-0500
024-44017-002	IH30836105/40	590-8	PD44705-0500
024-44017-003	IH30836106/40	590-8-8	PD44708
024-44018-0	IH30836107/40	590-8-DL	PD44708
024-44035-000	IH30836108/1	590C/0350/0/3/0/1/0/22	PD44813-0002
024-44037-001	IH30836108/40	590C/0350/5/3/0/0/0/00	PD44813-0002
024-44046-001	IH30836109/1	590C/0350/5/3/0/1/0/00	PD44813-0002
024-44056-000	IH30836109/40	590C/0350/5/3/2/1/0/00	PD44813-0002
024-44056-001	IH30871001/100	590C/0350/6/0/0/1/0/00	PD44813-0003
024-44056-500	IH30871001/15-R90	590C/0350/6/3/3/1/0/00	PD44813-0003
024-44065-000	IH30871011/100	590C/0350/6/4/0/1/0/00	PD44813-0004
024-44071-000	IH30871011/15-R90	590C/0350/7/3/0/0/0/00	PD44813-0004
024-44071-502	IH30871021/100	590C/0350/7/3/0/1/0/00	PD44813-0004
024-44072-000	IH30871021/15-R90	590C/0350/9/0/0/0/0/00	PD44813-0004
024-44080-001	IH30871031/100	590C/0350/9/1/0/0/0/00	PD44813-0005
024-44087-000	IH30871031/15-R90	590C/0350/9/4/0/1/0/00	PD44813-0005
024-44091-000	IH30871041/100	590C/0350/A/1/0/0/0/00	PD44813-0005
024-44094-500	IH30871041/15-R90	590C/0350/A/1/0/0/1/00	PD44813-0005
024-44113-000	IH30871051/100	590C/0700/5/3/0/0/0/00	PD44813-0006
024-44115-000	IH30871051/10-R60	590C/0700/5/3/0/1/0/00	PD44813-0006
024-44115-001	IH30872400/100	590C/0700/6/0/0/1/0/00	PD44813-0006
024-44115-002	IH30872401/100	590C/0700/6/1/0/1/0/00	PD44813-0006
024-44117-000	IH30872402/100	590C/0700/6/3/3/1/0/00	PD44813-0007
024-44119-000	IH30872403/100	590C/0700/7/3/0/0/0/00	PD44813-0007
024-44119-001	IH30872404/100	590C/0700/7/3/0/1/0/00	PD44813-0008
024-44128-000	IH30872405/100	590C/0700/9/0/0/3/1/00	PD44813-0008
024-44135-000	IH35033220/50	590C/0700/9/1/0/0/0/00	PD44813-0009
024-44137-000	IH35033221/50	590C/0700/A/1/0/0/0/00	PD44813-0009
024-44137-002	IH35033222/50	590C/0700/A/3/0/1/0/00	PD44813-0010
024-44146-000	IH35033223/50	590C/1100/5/3/0/0/0/00	PD44813-0010
024-44161-001	IH35033229/100	590C/1100/5/3/2/1/0/00	PD44813-0012
024-44169-000	IH35033230/100	590C/1100/6/1/0/1/0/00	PD44813-0012
024-44170-500	IH35033231/100	590C/1100/7/3/0/0/0/00	PD44813-0014
024-44176-002	IH35033240/25	590C/1100/7/3/0/1/0/00	PD44813-0014
024-44179-000	IH35033241/25	590C/1100/A/1/0/0/1/00	PD44814-0003
024-44179-002	IH35033242/25	590C/1500/5/3/0/1/0/00	PD44814-0003
024-44184-003	IH35033245/50	590C/1500/6/3/3/3/1/00	PD44814-0003
024-44185-000	IH35033246/25	590C/1500/7/0/0/1/0/00	PD44814-0003
024-44189-002	IH35040010/100	590C/1500/7/3/0/0/0/00	PD44814-0004
024-44189-5	IH35040012/100	590C/1800/5/3/0/0/0/00	PD44814-0004
024-44195-000	IH35040014/100	590C/1800/7/3/0/0/0/00	PD44814-0004
024-44195-003	IH35040015/100	590C/2700/5/0/0/3/0/00	PD44814-0004
024-44197-000	IH35040016/100	590C/2700/5/3/0/0/0/00	PD44814-0008
024-44197-001	IH35040114/100	590C/2700/5/3/0/1/0/00	PD44814-0008

024-44197-002	IH35040214/100	590C/2700/6/0/0/1/0/00	PD44814-0010
024-44197-003	IH35040261/100	590C/2700/7/3/0/0/0/00	PD44814-0010
024-44198-0	IH35040268/100	590DC-00-000	PD44947
024-44198-000	IH35040270/100	590DC-00-013	PD44947
024-44206-000	IH35560020/50	590P-23215010-P00-F0A0	PD44973
024-44206-003	IH35560025/50	590P-23215010-P00-U0A0	PD44973
024-44223-000	IH35560040/50	590P-23215010-P00-U0V0	PD44978
024-44227-001	IH35560050/50	590P-23215010-P00-U4A0	PD44978
024-44231-001	IH35560060/50	590P-23215010-P00-U4AP	PD45064
024-44232-002	IH35560070/50	590P-23215010-P00-U4V0	PD45064
024-44234-000	IH35560080/50	590P-23215010-P00-U4WP	PD45065
024-44234-003	IH35560100/30	590P-23235010-P00-D4A0	PD45065
024-44251-000	IH35560120/30	590P-23235010-P00-D4W0	PD45075-0008
024-44253-001	IH35560150/30	590P-23235010-P00-F0A0	PD45075-0008
024-44254-000	IH35560200/15	590P-23235010-P00-F4V0	PD45075-0010
024-44260-000	IH35560250/15	590P-23235010-P00-U0A0	PD45075-0010
024-44269-003	IH35562032/50	590P-23235010-P00-U4A0	PD45079-0800-08
024-44270-003	IH35562160/30	590P-23235010-P00-U4V0	PD45079-0800-08
024-44283-003	IH35576050/20	590P-23235010-P00-U4WP	PD45080
024-44286-000	IH35576060/20	590P-23240020-P00-U4WP	PD45080
024-44287-000	IH35576080/20	590P-23270020-P00-D4A0	PD45290-0160
024-44289-000	IH35600025/50	590P-23270020-P00-U4V0	PD45290-0160
024-44289-002	IH35600030/50	590P-23311020-P00-U4A0	PD45294
024-44291-000	IH35600035/50	590P-23311020-P00-U4V0	PD45294
024-44295-0	IH35600040/50	590P-23316520-P00-U4A0	PD45386
024-44325-000	IH35600045/50	590P-23316520-P00-U4V0	PD45386
024-44330-000	IH35600050/50	590P-23318031-P00-U4V0	PD45459-0233
024-44370-002	IH35600060/50	590P-23318032-P00-U4V0	PD45459-0233
024-44385-003	IH35600070/50	590P-23338042-A00-U4V0	PD45461-0133
024-44386-001	IH35600080/50	590P-23350042-A00-U4V0	PD45461-0133
024-44407-0	IH35600100/25	590P-23372542-P00-U4WP	PD45461-0233
024-44407-001	IH35600150/25	590P-53215010-P00-D4A0	PD45461-0233
024-44408-000	IH35602019/50	590P-53215010-P00-D4V0	PD45462-0133
024-44411-000	IH35602032/50	590P-53215010-P00-D4W0	PD45462-0133
024-44414-000	IH35602038/50	590P-53215010-P00-E4A0	PD45464-5733
024-44415-000	IH35602075/50	590P-53215010-P00-F0A0	PD45464-5733
024-44415-003	IH35602090/25	590P-53215010-P00-F4A0	PD45469
024-44436-003	IH35602110/25	590P-53215010-P00-F4WP	PD45469
024-44476-001	IH35620040/50	590P-53215010-P00-U0A0	PD45470
024-44477-000	IH35620050/50	590P-53215010-P00-U0V0	PD45470
024-44478-000	IH35620060/50	590P-53215010-P00-U0W0	PD45472
024-44479-000	IH35620100/25	590P-53215010-P00-U4A0	PD45472
024-44489-000	IH35641010/30	590P-53215010-P00-U4AL	PD45473
024-44495-000	IH35641012/30	590P-53215010-P00-U4AP	PD45473
024-44512-000	IH35641016/50	590P-53215010-P00-U4PL	PD45480
024-44518-0	IH35641019/50	590P-53215010-P00-U4V0	PD45480
024-44545-000	IH35641020/50	590P-53215010-P00-U4W0	PD45483
024-44546-000	IH35641025/50	590P-53235010-P00-D0A0	PD45483
024-44546-003	IH35641030/50	590P-53235010-P00-D4A0	PD45484
024-44550-015	IH35641032/50	590P-53235010-P00-D4W0	PD45484
024-44557-000	IH35641038/50	590P-53235010-P00-D4WP	PD45485
024-44565-013	IH35641040/50	590P-53235010-P00-E4A0	PD45485
024-44571-000	IH35641045/50	590P-53235010-P00-E4AP	PD45486

024-44576-000	IH35641050/50	590P-53235010-P00-E4V0	PD45486
024-44587-000	IH35641060/50	590P-53235010-P00-E4W0	PD45487
024-44587-001	IH35641075/50	590P-53235010-P00-F0A0	PD45487
024-44587-501	IH35641100/30	590P-53235010-P00-F4A0	PD45495
024-44597-001	IH35641120/30	590P-53235010-P00-F4WP	PD45495
024-44597-002	IH35641125/30	590P-53235010-P00-U0A0	PD45506
024-44599-5	IH35641150/20	590P-53235010-P00-U0AP	PD45506
024-44615-5	IH35653025/100	590P-53235010-P00-U0V0	PD45508
024-44618-000	IH35653032/100	590P-53235010-P00-U0W0	PD45508
024-44701-0	IH35653038/100	590P-53235010-P00-U0WP	PD45604-0025
024-44705-000	IH35653040/100	590P-53235010-P00-U4A0	PD45604-0025
024-44714-000	IH35653045/100	590P-53235010-P00-U4AL	PD45604-0050
024-44715-000	IH35653051/100	590P-53235010-P00-U4AP	PD45604-0050
024-44717-000	IH35653063/100	590P-53235010-P00-U4AR	PD45687-0335
024-44724-514	IH35653075/100	590P-53235010-P00-U4PP	PD45687-0335
024-44725-000	IH35653100/100	590P-53235010-P00-U4V0	PD45699
024-44729-000	IH35653150/100	590P-53235010-P00-U4VR	PD45699
024-44730-002	IH35653200/100	590P-53235010-P00-U4W0	PD45702
024-44754-000	IH36203000/40	590P-53235010-P00-U4WL	PD45702
024-44764-000	IH36203002/40	590P-53235010-P00-U4WP	PD45703
024-44766-0	IH36203003/40	590P-53235010-P83-U0V0	PD45703
024-44766-000	IH36203004/40	590P-53240020-P00-D4A0	PD45704
024-44767-5	IH36203005/40	590P-53240020-P00-D4WP	PD45704
024-44782-000	IH36203006/40	590P-53240020-P00-F0A0	PD45722
024-44782-001	IH36203008/40	590P-53240020-P00-U0V0	PD45722
024-44795-002	IH36203010/40	590P-53240020-P00-U4A0	PD45780
024-44801-001	IH36203103/20	590P-53240020-P00-U4AD	PD45780
024-44805-000	IH36203105/20	590P-53240020-P00-U4AL	PD45785
024-44806-002	IH36203107/20	590P-53240020-P00-U4AP	PD45785
024-44810-000	IH36203240/40	590P-53240020-P00-U4V0	PD45794
024-44818-000	IH36203253/40	590P-53240020-P00-U4W0	PD45794
024-44822-000	IH36203257/40	590P-53240020-PT0-U4A0	PD45800
024-44838-0	IH36211010/20	590P-53270020-P00-D0A0	PD45800
024-44838-011	IH36211050/10	590P-53270020-P00-D4A0	PD45806-0010
024-44870-002	IH36214045/40	590P-53270020-P00-D4W0	PD45806-0010
024-44878-004	IH36214050/40	590P-53270020-P00-D4WP	PD45806-0050
024-44885-0	IH36214052/40	590P-53270020-P00-E4A0	PD45806-0050
024-44885-000	IH36214054/40	590P-53270020-P00-E4AD	PD45927
024-44890-000	IH36214055/40	590P-53270020-P00-E4W0	PD45927
024-44890-002	IH36214058/40	590P-53270020-P00-F0A0	PD45930
024-44904-003	IH36214060/40	590P-53270020-P00-F4A0	PD45930
024-44905-003	IH36214063/20	590P-53270020-P00-U0A0	PD45965-0150/333ATEX
024-44911-500	IH36214064/20	590P-53270020-P00-U0V0	PD45965-0150/333ATEX
024-44912-003	IH36214066/20	590P-53270020-P00-U0VL	PD45972
024-44929-000	IH36214067/20	590P-53270020-P00-U0WP	PD45972
024-44937-000	IH36214068/20	590P-53270020-P00-U4A0	PD45973
024-44953-000	IH36214070/20	590P-53270020-P00-U4AL	PD45973
024-44959-0	IH36242301/40	590P-53270020-P00-U4AP	PD45974
024-44963-000	IH36242302/40	590P-53270020-P00-U4AR	PD45974
024-45006-000	IH36242303/40	590P-53270020-P00-U4PP	PD45976
024-45049-000	IH36242304/40	590P-53270020-P00-U4V0	PD45976
024-45058-002	IH36242305/40	590P-53270020-P00-U4W0	PD46235
024-45079-000	IH36242401/40	590P-53270020-P00-U4WE	PD46235

024-45097-0	IH36242402/40	590P-53270020-P00-U4WP	PD46334
024-45103-002	IH36242404/40	590P-53270020-P83-U0V0	PD46334
024-45104-0	IH36242405/40	590P-53311020-P00-D0A0	PD46335
024-45104-002	IH36242406/40	590P-53311020-P00-D4A0	PD46335
024-45108-0	IH36242408/40	590P-53311020-P00-D4V0	PD46443-0025
024-45114-001	IH36242410/40	590P-53311020-P00-E4A0	PD46443-0025
024-45121-000	IH36242411/40	590P-53311020-P00-F0A0	PD46443-0025
024-45122-000	IH36242413/40	590P-53311020-P00-F4A0	PD46443-0025
024-45145-000	IH36242415/20	590P-53311020-P00-F4AP	PD46443-0030
024-45152-001	IH36242431/40	590P-53311020-P00-U0A0	PD46443-0030
024-45153-006	IH36242432/40	590P-53311020-P00-U0V0	PD46443-0040
024-45172-011	IH36242434/40	590P-53311020-P00-U0W0	PD46443-0040
024-45191-000	IH36242435/40	590P-53311020-P00-U4A0	PD46443-0050
024-45191-010	IH36242436/40	590P-53311020-P00-U4AP	PD46443-0050
024-45202-000	IH36242438/40	590P-53311020-P00-U4P0	PD46443-0050
024-45202-500	IH36242440/40	590P-53311020-P00-U4V0	PD46443-0050
024-45209-0	IH36242442/40	590P-53311020-P00-U4W0	PD46443-0065
024-45222-019	IH36242444/20	590P-53311020-P00-U4WP	PD46443-0065
024-45223-000	IH36341106/40	590P-53311020-P83-U0V0	PD46443-0075
024-45228-001	IH36341110/40	590P-53311020-P83-U4AP	PD46443-0075
024-45230-002	IH36341113/40	590P-53316520-P00-D0AP	PD46443-0080
024-45233-003	IH36341114/40	590P-53316520-P00-D4A0	PD46443-0080
024-45248-000	IH36341116/40	590P-53316520-P00-D4AE	PD46443-0100
024-45254-0	IH36341117/20	590P-53316520-P00-D4AP	PD46443-0100
024-45254-000	IH36341121/40	590P-53316520-P00-D4WP	PD46443-0110
024-45255-000	IH36342181/40	590P-53316520-P00-E4A0	PD46443-0110
024-45295-000	IH36342185/40	590P-53316520-P00-E4W0	PD46443-0120
024-45320-000	IH36342187/40	590P-53316520-P00-F0A0	PD46443-0120
024-45321-000	IH36346010/40	590P-53316520-P00-F4A0	PD46443-0125
024-45330-000	IH36346011/40	590P-53316520-P00-U0A0	PD46443-0125
024-45331-003	IH36346012/20	590P-53316520-P00-U0V0	PD46443-0135
024-45343-002	IH36346013/20	590P-53316520-P00-U0W0	PD46443-0135
024-45360-000	IH36348000/40	590P-53316520-P00-U0WL	PD46443-0140
024-45376-000	IH36348002/40	590P-53316520-P00-U0WP	PD46443-0140
024-45396-000	IH36348003/40	590P-53316520-P00-U4A0	PD46443-0150
024-45430-000	IH36348005/40	590P-53316520-P00-U4AL	PD46443-0150
024-45441-000	IH36351201/40	590P-53316520-P00-U4AP	PD46443-0160
024-45446-000	IH36351202/40	590P-53316520-P00-U4V0	PD46443-0160
024-45513-001	IH36351203/40	590P-53316520-P00-U4W0	PD46443-0200
024-45514-000	IH36351204/40	590P-53316520-P00-U4WP	PD46443-0200
024-45514-002	IH36351250/40	590P-53316520-P00-U4WR	PD46443-0250
024-45519-0	IH36351251/40	590P-53316520-P83-U0V0	PD46443-0250
024-45519-000	IH36351252/40	590P-53318031-P00-D4A0	PD46443-0250
024-45519-001	IH36351253/40	590P-53318031-P00-F0A0	PD46443-0250
024-45522-027	IH36351255/20	590P-53318031-P00-F4A0	PD46443-0320
024-45527-0	IH36520560/0	590P-53318031-P00-U0A0	PD46443-0320
024-45532-000	IH36520561/0	590P-53318031-P00-U0V0	PD46443-0350
024-45532-5	IH36520563/0	590P-53318031-P00-U4A0	PD46443-0350
024-45532-500	IH36520564/0	590P-53318031-P00-U4V0	PD46443-0360
024-45534-000	IH36520565/0	590P-53318031-P00-U4WP	PD46443-0360
024-45538-000	IH36520566/0	590P-53318032-P00-D4A0	PD46443-0370
024-45572-001	IH36520567/0	590P-53318032-P00-E0A0	PD46443-0370
024-45574-000	IH36520568/0	590P-53318032-P00-E4A0	PD46443-0400

024-45582-000	IH36520569/0	590P-53318032-P00-E4WP	PD46443-0400
024-45583-002	IH36520582/40	590P-53318032-P00-F0A0	PD46443-0500
024-45597-000	IH36521204/40	590P-53318032-P00-F4A0	PD46443-0500
024-45598-000	IH36522309/40	590P-53318032-P00-I4A0	PD46443-0600
024-45622-000	IH36522310/40	590P-53318032-P00-U0A0	PD46443-0600
024-45625-000	IH36522311/40	590P-53318032-P00-U0V0	PD46443-0700
024-45629-000	IH36522312/40	590P-53318032-P00-U4A0	PD46443-0700
024-45640-502	IH36522313/40	590P-53318032-P00-U4V0	PD46443-0760
024-45711-002	IH36522314/40	590P-53318032-P00-U4W0	PD46443-0760
024-45716-000	IH36522315/40	590P-53318032-P00-U4WP	PD46443-0800
024-45718-000	IH36522316/40	590P-53318032-P41-U4A0	PD46443-0800
024-45719-002	IH36530099/40	590P-53318032-P41-U4V0	PD46443-1000
024-45723-000	IH36530201/40	590P-53318032-PT0-U4A0	PD46443-1000
024-45735-002	IH36530202/40	590P-53318032-PT0-U4W0	PD46443-1100
024-45755-000	IH36530203/40	590P-53327031-P00-F0A0	PD46443-1100
024-45807-000	IH36530204/40	590P-53327031-P00-F4A0	PD46443-1200
024-45824-000	IH36530205/40	590P-53327031-P00-U0V0	PD46443-1200
024-45828-000	IH36530206/40	590P-53327031-P00-U4A0	PD46444-0010
024-45828-012	IH36530207/20	590P-53327031-P00-U4AL	PD46444-0010
024-45829-000	IH36530208/20	590P-53327031-P00-U4P0	PD46444-0012
024-45832-0	IH36530209/20	590P-53327031-P00-U4V0	PD46444-0012
024-45884-011	IH36530211/20	590P-53327031-P00-U4W0	PD46444-0015
024-45905-001	IH36530212/40	590P-53327031-P00-U4WD	PD46444-0015
024-45945-003	IH36530229/40	590P-53327031-P00-U4WP	PD46444-0025
024-45978-000	IH36530230/40	590P-53327031-P41-U4V0	PD46444-0025
024-49015-0	IH36530231/40	590P-53327032-P00-D4A0	PD46444-0045
024-49015-000	IH36530232/40	590P-53327032-P00-D4WP	PD46444-0045
024-49020-000	IH36530233/40	590P-53327032-P00-E0A0	PD46444-0050
024-49043-000	IH36530234/40	590P-53327032-P00-E4A0	PD46444-0050
024-49055-000	IH36530235/40	590P-53327032-P00-E4W0	PD46444-0080
024-49065-012	IH36530236/20	590P-53327032-P00-E4WE	PD46444-0080
024-49084-000	IH36530253/40	590P-53327032-P00-F0A0	PD46444-0100
024-49116-000	IH36530254/40	590P-53327032-P00-F4A0	PD46444-0100
024-49120-002	IH36530256/20	590P-53327032-P00-U0A0	PD46444-0125
024-49122-000	IH36530257/20	590P-53327032-P00-U0V0	PD46444-0125
024-49135-002	IH36530430/40	590P-53327032-P00-U0VE	PD46444-0150
024-49146-000	IH36530431/40	590P-53327032-P00-U0W0	PD46444-0150
024-49169-001	IH36530432/40	590P-53327032-P00-U4A0	PD46444-0160
024-49194-000	IH36530433/40	590P-53327032-P00-U4AP	PD46444-0160
024-49211-001	IH36531001/40	590P-53327032-P00-U4P0	PD46444-0200
024-49216-000	IH36531002/40	590P-53327032-P00-U4V0	PD46444-0200
024-49216-003	IH36531003/20	590P-53327032-P00-U4W0	PD46444-0250
024-49229-000	IH36531004/40	590P-53327032-P00-U4WP	PD46444-0250
024-49254-000	IH36531012/40	590P-53327032-P41-U4A0	PD46444-0320
024-49254-001	IH36531019/20	590P-53327032-P41-U4V0	PD46444-0320
024-49264-000	IH36800002/100	590P-53327032-PT0-U4A0	PD46444-0550
024-49268-000	IH36800004/80	590P-53327032-PT0-U4W0	PD46444-0550
024-49291-000	IH36800005/80	590P-53338041-A00-U0V0	PD46444-0800
024-49293-000	IH36800006/40	590P-53338041-A00-U4V0	PD46444-0800
024-49306-0	IH36800007/40	590P-53338041-P00-F4A0	PD46445-0025
024-49306-000	IH36800088/40	590P-53338041-P00-U0W0	PD46445-0025
024-49323-0	IH36800089/40	590P-53338041-P00-U4A0	PD46445-0035
024-49323-000	IH36800090/40	590P-53338041-P00-U4W0	PD46445-0035

024-49324-000	IH36800091/40	590P-53338041-P00-U4WP	PD46445-0040
024-49325-000	IH36800092/40	590P-53338042-A00-D4A0	PD46445-0040
024-49332-520	IH36800093/40	590P-53338042-A00-F0A0	PD46445-0050
024-49335-0	IH36800096/40	590P-53338042-A00-U0V0	PD46445-0050
024-49355-000	IH36800098/40	590P-53338042-A00-U4A0	PD46445-0050
024-49362-000	IH36810111/40	590P-53338042-A00-U4V0	PD46445-0050
024-49404-004	IH36810112/40	590P-53338042-A00-U4W0	PD46445-0080
024-49437-000	IH36810113/40	590P-53338042-A00-U4WP	PD46445-0080
024-49441-001	IH36810114/40	590P-53338042-AT0-U4A0	PD46445-0100
024-49448-000	IH36810115/40	590P-53338042-AT0-U4W0	PD46445-0100
024-49459-000	IH36810116/40	590P-53338042-P00-E4A0	PD46445-0100
024-49469-000	IH36810117/40	590P-53338042-P00-F0A0	PD46445-0100
024-49485-000	IH36810130/40	590P-53338042-P00-F4A0	PD46445-0125
024-49492-000	IH36810131/40	590P-53338042-P00-U0WP	PD46445-0125
024-49506-000	IH36810132/40	590P-53338042-P00-U4A0	PD46445-0140
024-49528-003	IH36810133/40	590P-53338042-P00-U4V0	PD46445-0140
024-49564-000	IH36810134/40	590P-53338042-P00-U4W0	PD46445-0150
024-49610-0	IH36810135/40	590P-53338042-P00-U4WP	PD46445-0150
024-49614-000	IH36810136/40	590P-53350041-A00-U0V0	PD46445-0152
024-49620-000	IH36811529/40	590P-53350041-A00-U4V0	PD46445-0152
024-49622-000	IH36811530/40	590P-53350041-A00-U4W0	PD46445-0160
024-49642-0	IH36811531/40	590P-53350041-P00-U0V0	PD46445-0160
024-49657-000	IH36811532/40	590P-53350041-P00-U4A0	PD46445-0160
024-49657-003	IH36811534/40	590P-53350041-P00-U4AR	PD46445-0160
024-49677-0	IH36811535/40	590P-53350041-P00-U4V0	PD46445-0200
024-49712-000	IH36811536/40	590P-53350041-P00-U4W0	PD46445-0200
024-49729-000	IH36811538/20	590P-53350042-A00-D4A0	PD46445-0200
024-49750-001	IH36820200/40	590P-53350042-A00-E4WE	PD46445-0200
024-49767-002	IH36820202/40	590P-53350042-A00-E4WP	PD46445-0250
024-49782-000	IH36820206/40	590P-53350042-A00-U0V0	PD46445-0250
024-49828-003	IH36820207/40	590P-53350042-A00-U4A0	PD46445-0280
024-49843-000	IH36820300/40	590P-53350042-A00-U4V0	PD46445-0280
024-49853-0	IH36820303/40	590P-53350042-A00-U4W0	PD46445-0300
024-49868-000	IH36820305/40	590P-53350042-AT0-U4A0	PD46445-0300
024-49895-000	IH36822030/40	590P-53350042-AT0-U4W0	PD46445-0320
024-49917-003	IH36822031/40	590P-53350042-P00-E4A0	PD46445-0320
024-49969-002	IH36822041/40	590P-53350042-P00-F0A0	PD46445-0320
024-49976-000	IH36822217/40	590P-53350042-P00-U0A0	PD46445-0320
024-49989-002	IH36822220/40	590P-53350042-P00-U0V0	PD46445-0400
024-49999-000	IH36822222/40	590P-53350042-P00-U4A0	PD46445-0400
024-49999-001	IH36822223/40	590P-53350042-P00-U4V0	PD46445-0650
024-49999-002	IH36822230/40	590P-53350042-P00-U4W0	PD46445-0650
024-49999-003	IH36827051/0	590P-53350042-P00-U4WP	PD46445-0700
024-49999-500	IH36827052/0	590P-53372541-A00-U0V0	PD46445-0700
024-50008-002	IH36827053/0	590P-53372541-A00-U4V0	PD46445-0710
024-50022-0	IH36827054/0	590P-53372541-A00-U4WP	PD46445-0710
024-50022-000	IH36827055/0	590P-53372541-P00-U4A0	PD46445-0750
024-50022-001	IH36830001/1	590P-53372541-P00-U4W0	PD46445-0750
024-50064-000	IH36830002/1	590P-53372542-A00-D4A0	PD46445-1000
024-50066-000	IH36830003/1	590P-53372542-A00-E4WE	PD46445-1000
024-50074-000	IH36830004/1	590P-53372542-A00-U4A0	PD46445-1050
024-50107-000	IH36830005/1	590P-53372542-A00-U4V0	PD46445-1050
024-50163-0	IH36830006/1	590P-53372542-AT0-U4A0	PD46446-0005

024-50163-000	IH36830007/1	590P-53372542-AT0-U4W0	PD46446-0005
024-50190-000	IH36830008/1	590P-53372542-P00-E4A0	PD46446-0010
024-50195-000	IH36830009/1	590P-53372542-P00-F0A0	PD46446-0010
024-50195-017	IH36830010/1	590P-53372542-P00-U0A0	PD46446-0025
024-50211-000	IH36830011/1	590P-53372542-P00-U4A0	PD46446-0025
024-50223-002	IH36830012/1	590P-53372542-P00-U4AP	PD46446-0040
024-50223-003	IH36830013/1	590P-53372542-P00-U4V0	PD46446-0040
024-50225-0	IH36830014/1	590P-53372542-P00-U4W0	PD46446-0050
024-50225-002	IH36830015/1	590P-53383041-A00-U0V0	PD46446-0050
024-50245-0	IH36830016/1	590P-53383041-A00-U4V0	PD46446-0080
024-50246-000	IH36830017/1	590P-53383042-A00-D4A0	PD46446-0080
024-50247-0	IH36830018/1	590P-53383042-A00-U4A0	PD46446-0100
024-50247-000	IH36830019/1	590P-53383042-A00-U4AP	PD46446-0100
024-50248-000	IH36830020/1	590P-53383042-A00-U4V0	PD46446-0110
024-50259-000	IH36830023/1	590P-53383042-P00-F0A0	PD46446-0110
024-50263-000	IH36830095/40	590P-53383042-P00-U0V0	PD46446-0125
024-50275-000	IH36830096/40	590P-53383042-P00-U4A0	PD46446-0125
024-50276-000	IH36830097/40	590P-53383042-P00-U4V0	PD46446-0160
024-50277-0	IH36830101/40	590P-53383042-P00-U4W0	PD46446-0160
024-50277-000	IH36830102/40	590P-534120H0-P00-F0A0	PD46446-0200
024-50277-003	IH36830103/40	590P-534120H0-P00-U4A0	PD46446-0200
024-50277-500	IH36830104/40	590P-53415851-A00-U4W0	PD46446-0250
024-50278-0	IH36830105/40	590P-53415852-A00-U4A0	PD46446-0250
024-50278-000	IH36830106/40	590P-53415852-A00-U4V0	PD46446-0300
024-50278-003	IH36830107/40	590P-53415852-P00-U4V0	PD46446-0300
024-50278-500	IH36830108/40	590P-63338042-P00-U4V0	PD46446-0540
024-50328-000	IH36830109/40	590P-63350042-P00-U4A0	PD46446-0540
024-50337-0	IH36830110/40	590P-63372542-P00-U4V0	PD46447-0025
024-50337-000	IH36830111/40	590P-63383042-A00-U4V0	PD46447-0025
024-50347-001	IH36830112/40	590P-734170H0-P00-U4V0	PD46447-0050
024-50361-000	IH36830113/40	590P-734220H0-P00-D4A0	PD46447-0050
024-50369-0	IH36830114/40	590P-734220H0-P00-D4PP	PD46447-0055
024-50398-000	IH36830115/40	590P-734220H0-P00-U4V0	PD46447-0055
024-50415-000	IH36830116/20	590P-734270H0-P00-U4V0	PD46447-0075
024-50419-000	IH36830117/20	590P-734270H0-P00-U4W0	PD46447-0075
024-50436-000	IH36830118/20	590PD-0010-FR-0	PD46447-0080
024-50439-000	IH36830119/20	590PD-0010-UK-0	PD46447-0080
024-50439-5	IH36830120/20	590PD-0011-GR-0	PD46447-0090
024-50451-000	IH36831022/20	590PD-0011-UK-0	PD46447-0090
024-50456-000	IH36831023/40	590PD-0011-UK-83	PD46447-0100
024-50457-000	IH36831030/1	590PL-53416060-P00	PD46447-0100
024-50462-000	IH36831031/1	590PX-53235010-P00-F0A0	PD46447-0100
024-50465-000	IH36831300/40	590PX-53235010-P00-U4A0	PD46447-0100
024-50471-000	IH36831301/40	590PX-53235010-P00-U4V0	PD46447-0110
024-50474-0	IH36831303/40	590PX-53235010-P00-U4W0	PD46447-0110
024-50474-000	IH36831305/40	590PX-53235010-PT0-U4W0	PD46447-0125
024-50487-000	IH36831308/20	590PX-53270010-P00-F0A0	PD46447-0125
024-50494-000	IH36831309/20	590PX-53270010-P00-U4A0	PD46447-0150
024-50498-000	IH36831311/20	590PX-53270010-P00-U4V0	PD46447-0150
024-50498-000	IH36831312/20	590PX-53270010-PT0-U4A0	PD46447-0160
024-50498-001	IH36836110/40	590PX-53311011-P00-U4A0	PD46447-0160
024-50498-400	IH36836111/1	590PX-53311012-P00-U4A0	PD46447-0200
024-50512-000	IH36836111/40	590PX-53311012-P00-U4V0	PD46447-0200

024-50531-000	IH36836112/1	590PX-53311012-PT0-U4A0	PD46447-0250
024-50576-0	IH36836112/40	590PX-53315011-P00-U4V0	PD46447-0250
024-50576-000	IH36836113/40	590PX-53315012-P00-U4A0	PD46447-0300
024-50576-001	IH36836114/1	590PX-53315012-P00-U4W0	PD46447-0300
024-50576-5	IH36836114/40	590PX-53315012-PT0-U4A0	PD46447-0320
024-50576-501	IH36836115/40	590PXD-0010-FR-0	PD46447-0320
024-50582-000	IH36836116/40	590PXD-0010-UK-0	PD46447-0350
024-50582-003	IH36836117/40	590PXD-0011-GR-0	PD46447-0350
024-50595-000	IH36836119/40	590PXD-0011-UK-0	PD46447-0400
024-50597-0	IH36923100/40	590PXD-0011-UK-83	PD46447-0400
024-50604-000	IH36923102/20	590S-0350-9-1-0-00	PD46447-0420
024-50637-000	IH36974111/40	590S-0350-9-1-1-00	PD46447-0420
024-50637-500	IH36974112/40	590S-0700-6-1-0-00	PD46447-0450
024-50663-000	IH36974115/20	590S-0700-9-1-1-00	PD46447-0450
024-50664-000	IH36974117/20	590S-1100-6-1-0-00	PD46447-0500
024-50664-001	IH42302702/40	590S-1100-9-0-3-00	PD46447-0500
024-50665-000	IH42302704/40	590S-1100-9-1-1-00	PD46447-0600
024-50665-001	IH42302718/40	590S-1500-9-1-1-00	PD46447-0600
024-50666-000	IH7092100200/40	590S-1800-6-1-0-00	PD46448-0015
024-50666-500	IH709250200/40	590S-1800-A-1-4-00	PD46448-0015
024-50666-501	IH709263200/40	590S-2700-6-1-0-00	PD46448-0025
024-50703-000	IH709275200/40	5910P	PD46448-0025
024-50705-002	IH7093100200/40	591C/0350/5/3/0/1/0/00	PD46448-0050
024-50705-003	IH7093100304/40	591C/0350/6/3/3/1/0/00	PD46448-0050
024-50744-000	IH7093125204/40	591C/0350/7/3/0/1/0/00	PD46448-0080
024-50771-0	IH709325200/100	591C/0350/9/0/0/0/0/00	PD46448-0080
024-50771-002	IH709325200/40	591C/0350/9/1/0/1/0/00	PD46448-0100
024-50820-0	IH709325300/100	591C/0350/A/1/0/0/1/00	PD46448-0100
024-50820-000	IH709331200/100	591C/0700/5/3/0/1/0/00	PD46448-0125
024-50829-001	IH709331200/40	591C/0700/6/1/0/1/0/00	PD46448-0125
024-50831-5	IH709331300/100	591C/0700/6/3/3/1/0/00	PD46448-0200
024-50831-500	IH709338200/100	591C/0700/6/4/3/3/0/00	PD46448-0200
024-50862-002	IH709338200/40	591C/0700/9/1/0/1/0/00	PD46448-0300
024-50873-0	IH709338300/100	591C/1100/6/1/0/1/0/00	PD46448-0300
024-50873-010	IH709350200/100	591C/1100/6/1/3/3/1/00	PD46448-0640
024-50894-000	IH709350200/40	591C/1100/6/3/3/1/0/00	PD46448-0640
024-50897-000	IH709350304/100	591C/1100/6/4/3/3/0/00	PD46448-0900
024-50921-000	IH709363200/100	591C/1100/A/1/0/0/0/00	PD46448-0900
024-50921-001	IH709363200/40	591C/1500/6/1/0/1/0/00	PD46449-0025
024-50938-0	IH709363304/100	591C/1500/7/3/0/0/0/00	PD46449-0025
024-50938-000	IH709375200/40	591C/1500/9/1/0/0/0/00	PD46449-0050
024-50995-000	IH709375304/40	591C/1800/6/3/3/1/0/00	PD46449-0050
024-51034-000	IH7102100304/40	591C/2700/5/3/0/1/0/00	PD46449-0080
024-51048-000	IH710275304/40	591C/2700/6/0/0/1/0/00	PD46449-0080
024-51070-003	IH72190500/10	591C/2700/7/3/0/1/0/00	PD46449-0100
024-51076-0	IH72190625/10	591P-03338042-A26-U4A0	PD46449-0100
024-51076-000	IH72190750/10	591P-13338042-A23-U4A0	PD46449-0125
024-51076-500	IH72191000/10	591P-23215010-P00-U4A0	PD46449-0125
024-51095-001	IH72191250/10	591P-23240020-P00-U4V0	PD46449-0150
024-51113-0	IH72191500/10	591P-23338042-A00-U4A0	PD46449-0150
024-51113-000	IH72192000/10	591P-53215010-P00-D4A0	PD46449-0160
024-51113-002	IH72192500/10	591P-53215010-P00-F0A0	PD46449-0160
024-51121-000	IH72193000/10	591P-53215010-P00-U0V0	PD46449-0160/055

024-51122-000	IH73950500/10	591P-53215010-P00-U4A0	PD46449-0160/055
024-51124-000	IH73950594/10	591P-53215010-P00-U4V0	PD46449-0200
024-51127-000	IH73950750/10	591P-53215010-P00-U4W0	PD46449-0200
024-51132-0	IH73951000/10	591P-53235010-P00-D4A0	PD46449-0250
024-51132-000	IH73951125/10	591P-53235010-P00-E4WP	PD46449-0250
024-51148-000	IH73951250/10	591P-53235010-P00-F0A0	PD46449-0300
024-51154-0	IH73951375/10	591P-53235010-P00-I4A0	PD46449-0300
024-51154-000	IH73951500/10	591P-53235010-P00-U0V0	PD46449-0320
024-51175-002	IH73952000/10	591P-53235010-P00-U0WR	PD46449-0320
024-51181-000	IH73952250/10	591P-53235010-P00-U4A0	PD46449-0350
024-51181-032	IH73952375/10	591P-53235010-P00-U4PL	PD46449-0350
024-51195-000	IH73952500/10	591P-53235010-P00-U4V0	PD46449-0400
024-51226-000	IH73953000/10	591P-53235010-P00-U4W0	PD46449-0400
024-51234-000	IH73954000/10	591P-53240020-P00-D4A0	PD46449-0550
024-51246-000	IL.1115	591P-53240020-P00-U0V0	PD46449-0550
024-51253-000	IL.761241	591P-53240020-P00-U4A0	PD46449-0700
024-51257-000	IL761151	591P-53240020-P00-U4V0	PD46449-0700
024-51266-0	IL761251	591P-53240020-PT0-U4A0	PD46449-1200
024-51267-0	IN FDW3525	591P-53270020-P00-D4A0	PD46449-1200
024-51284-0	IN010QLBNEXXX1	591P-53270020-P00-E4V0	PD46450-0025
024-51284-000	IN08-25X2.5TFCF	591P-53270020-P00-F0A0	PD46450-0025
024-51291-000	IN08-25X2.5TFVCF	591P-53270020-P00-F4A0	PD46450-0045
024-51291-001	IN08-25X2.5TTCF	591P-53270020-P00-U0A0	PD46450-0045
024-51291-043	IN1005QBNEXXX1	591P-53270020-P00-U0V0	PD46450-0050
024-51312-003	IN1005QLBNEXXX1	591P-53270020-P00-U4A0	PD46450-0050
024-51317-001	IN1010QBNEXXX1	591P-53270020-P00-U4AR	PD46450-0100
024-51328-002	IN1010QLBNEXXX1	591P-53270020-P00-U4V0	PD46450-0100
024-51371-000	IN1105QBNEXXX3	591P-53311020-P00-D4A0	PD46450-0160
024-51404-0	IN1110QBNEXXX1	591P-53311020-P00-E4V0	PD46450-0160
024-51404-000	IN1110QBNEXXX3	591P-53311020-P00-F0A0	PD46450-0200
024-51410-000	IN1110QLBNEXXX3	591P-53311020-P00-F4A0	PD46450-0200
024-51419-0	IN1120QBNEXXX3	591P-53311020-P00-U0A0	PD46450-0250
024-51419-000	IN1120QLBNEXXX3	591P-53311020-P00-U0V0	PD46450-0250
024-51444-000	IN11A20QBNEXXX5	591P-53311020-P00-U4A0	PD46450-0400
024-51466-000	IN11A20QLNBEXXX1	591P-53311020-P00-U4AL	PD46450-0400
024-51467-000	IN12040WBNEXXX1	591P-53311020-P00-U4AP	PD46495
024-51481-000	IN1205QBNEXXX5	591P-53311020-P00-U4V0	PD46495
024-51484-000	IN1205QBNS25	591P-53311020-P00-U4W0	PD46584
024-51496-000	IN1210CBNEXXX3	591P-53316520-P00-D4A0	PD46584
024-51568-003	IN1210QBNEXXX1	591P-53316520-P00-F0A0	PD46662-0300
024-51636-001	IN1210QLBNEXXX1	591P-53316520-P00-I4A0	PD46662-0300
024-51647-001	IN1210QLBNEXXX3	591P-53316520-P00-U0V0	PD46662-0350
024-51686-000	IN1220QBNEXXX3	591P-53316520-P00-U0W0	PD46662-0350
024-51697-000	IN1220QLBNEXXX3	591P-53316520-P00-U4A0	PD46670-0025
024-51729-000	IN12-20X2.5TFCF	591P-53316520-P00-U4AP	PD46670-0025
024-51735-000	IN12-20X2.5TFVCF	591P-53316520-P00-U4V0	PD46670-0040
024-51751-000	IN12-30X3.0TFCF	591P-53316520-P00-U4W0	PD46670-0040
024-51751-001	IN12-30X3.0TFVCF	591P-53318031-P00-U0V0	PD46670-0050
024-51762-000	IN12-30X4.0TFCF	591P-53318031-P00-U4A0	PD46670-0050
024-51763-000	IN12-30X4.0TFVCF	591P-53318031-P00-U4V0	PD46670-0050
024-51776-000	IN12-30X4.0TFVSS	591P-53318032-P00-D4A0	PD46670-0050
024-51777-0	IN12XBNEXXX1	591P-53318032-P00-F0A0	PD46670-0060
024-51788-000	IN1302QLBNEXXX3	591P-53318032-P00-U4A0	PD46670-0060

024-52208-003	IN1310QBNEXXX3	591P-53318032-P00-U4V0	PD46670-0080
024-52241-001	IN1310QLBNEXXX3	591P-53318032-P00-U4W0	PD46670-0080
024-52559-000	IN1320QBNEXXX1	591P-53318032-P41-U4A0	PD46670-0100
024-52726-003	IN1410QBNEXXX1	591P-53318032-PT0-U4A0	PD46670-0100
024-58001-000	IN1410QBNEXXX3	591P-53327031-P00-U0A0	PD46670-0125
024-58048-000	IN1410QLBNEXXX1	591P-53327031-P00-U0V0	PD46670-0125
024-58054-000	IN1410QLBNEXXX3	591P-53327031-P00-U4A0	PD46670-0160
024-58070-017	IN1510QBNEXXX3	591P-53327031-P00-U4AP	PD46670-0160
024-58076-000	IN1510QLBNEXXX1	591P-53327031-P00-U4V0	PD46670-0200
024-58077-0	IN1510QLBNEXXX3	591P-53327031-P00-U4W0	PD46670-0200
024-58077-000	IN1510QLVNEXXX1	591P-53327031-P00-U4WP	PD46670-0300
024-58077-015	IN15120WBNBXXX3	591P-53327032-P00-D4A0	PD46670-0300
024-58110-000	IN1520QLBNEXXX1	591P-53327032-P00-E4A0	PD46670-0450
024-58110-500	IN1520QLBNEXXX3	591P-53327032-P00-F0A0	PD46670-0450
024-58115-000	IN15A10QBNEXXX1	591P-53327032-P00-F4A0	PD46671-0025
024-58116-000	IN15XXXLBNEXXX1	591P-53327032-P00-U0A0	PD46671-0025
024-58118-000	IN1610QBNEXXX3	591P-53327032-P00-U0V0	PD46671-0050
024-58126-000	IN1610QBNEXXX3S29	591P-53327032-P00-U4A0	PD46671-0050
024-58139-000	IN1610QLBNEXXX3	591P-53327032-P00-U4AP	PD46671-0080
024-58189-000	IN16-30X3.0TFCF	591P-53327032-P00-U4V0	PD46671-0080
024-58191-003	IN16-30X3.0TFVCF	591P-53327032-P00-U4W0	PD46671-0125
024-58191-017	IN16-30X3.0TFVSS	591P-53327032-P41-U4V0	PD46671-0125
024-58214-000	IN16-30X4.0TFCF	591P-53327032-PT0-U4A0	PD46671-0160
024-58215-000	IN16-30X4.0TFVCF	591P-53338041-A00-U0V0	PD46671-0160
024-58220-0	IN16-38X2.5TFVCF	591P-53338041-A00-U4A0	PD46671-0200
024-58230-000	IN16-38X2.5TTCF	591P-53338041-A00-U4AP	PD46671-0200
024-58248-000	IN16-38X3.0TFBCF	591P-53338041-A00-U4V0	PD46671-0400
024-58251-000	IN16-38X3.0TFBSS	591P-53338041-A81-U4V0	PD46671-0400
024-58266-003	IN16-38X3.0TFCF	591P-53338041-P00-I0A0	PD46671-0525
024-58266-013	IN16-38X3.0TFSS	591P-53338041-P00-U4A0	PD46671-0525
024-58292-002	IN16-38X3.0TFVCF	591P-53338042-A00-D4A0	PD46671-0600
024-58292-003	IN16-38X3.0TFVSS	591P-53338042-A00-E4A0	PD46671-0600
024-58311-000	IN16-38X3.0TTCF	591P-53338042-A00-U0V0	PD46671-0720
024-58311-001	IN16-38X3.0TTSS	591P-53338042-A00-U4A0	PD46671-0720
024-58352-000	IN16-38X4.0TFBCF	591P-53338042-A00-U4V0	PD46672-0025
024-58379-000	IN16-38X4.0TFBSS	591P-53338042-A80-U4A0	PD46672-0025
024-58393-0	IN16-38X4.0TFCF	591P-53338042-AT0-U4A0	PD46672-0050
024-58398-003	IN16-38X4.0TFSS	591P-53338042-P00-D4A0	PD46672-0050
024-58443-0	IN16-38X4.0TFVCF	591P-53338042-P00-E4A0	PD46672-0100
024-58445-000	IN16-38X4.0TFVSS	591P-53338042-P00-F0A0	PD46672-0100
024-58446-000	IN16-38X4.0TTBCF	591P-53338042-P00-F4A0	PD46672-0125
024-58446-001	IN16-38X4.0TTCF	591P-53338042-P00-U4A0	PD46672-0125
024-58464-000	IN16-38X4.0TTSS	591P-53338042-P00-U4V0	PD46672-0160
024-58492-0	IN16-38X5.0TFBCF	591P-53350041-A00-U0V0	PD46672-0160
024-58540-000	IN16-38X5.0TFBSS	591P-53350041-A00-U4V0	PD46672-0215
024-58540-001	IN16-38X5.0TFCF	591P-53350041-P00-U4A0	PD46672-0215
024-58576-0	IN16-38X5.0TFSS	591P-53350042-A00-D4A0	PD46672-0300
024-58587-0	IN16-38X5.0TFVCF	591P-53350042-A00-U0V0	PD46672-0300
024-58619-000	IN16-38X5.0TFVSS	591P-53350042-A00-U4A0	PD46672-0350
024-58622-003	IN16-38X5.0TTCF	591P-53350042-A00-U4V0	PD46672-0350
024-58649-000	IN16-38X5.0TTSS	591P-53350042-AT0-U4A0	PD46673-0050
024-58683-000	IN1702QBNEXXX3	591P-53350042-P00-F0A0	PD46673-0050
024-58742-000	IN17040WBNEXXX1	591P-53350042-P00-U0A0	PD46673-0100

024-58786-0	IN1705QBNEXXX3	591P-53350042-P00-U4A0	PD46673-0100
024-58839-000	IN1710QBNEXXX3	591P-53350042-P00-U4V0	PD46673-0160
024-58851-000	IN1720QBNEXXX3	591P-53350042-P00-U4W0	PD46673-0160
024-58851-5	IN1810QBNEXXX3	591P-53372541-A00-U0V0	PD46673-0200
024-58861-001	IN20-38X3.0TFBCF	591P-53372541-A00-U4AL	PD46673-0200
024-58862-002	IN20-38X3.0TFBSS	591P-53372541-A00-U4V0	PD46673-0400
024-58863-001	IN20-38X3.0TFCF	591P-53372541-A00-U4WP	PD46673-0400
024-58872-500	IN20-38X3.0TFSS	591P-53372541-P00-U4A0	PD46675-0928
024-58932-001	IN20-38X3.0TFVCF	591P-53372542-A00-D4A0	PD46675-0928
024-58974-000	IN20-38X3.0TFVSS	591P-53372542-A00-U4A0	PD46755
024-59045-000	IN20-38X3.0TTCF	591P-53372542-A00-U4AP	PD46755
024-59054-000	IN20-38X3.0TTSS	591P-53372542-A00-U4W0	PD46758-0080
024-59063-000	IN20-38X4.0TFBCF	591P-53372542-P00-F0A0	PD46758-0080
024-59070-000	IN20-38X4.0TFBSS	591P-53372542-P00-U0A0	PD46790
024-59080-000	IN20-38X4.0TFCF	591P-53372542-P00-U4A0	PD46790
024-59081-000	IN20-38X4.0TFSS	591P-53372542-P00-U4V0	PD46805-0005
024-59094-000	IN20-38X4.0TFVCF	591P-53383041-A00-U0V0	PD46805-0005
024-59117-000	IN20-38X4.0TFVSS	591P-53383041-A00-U4A0	PD46840
024-59129-000	IN20-38X4.0TTCF	591P-53383041-A00-U4V0	PD46840
024-59150-0	IN20-38X4.0TTSS	591P-53383041-A00-U4WP	PD46903-0233
024-59160-010	IN20-38X5.0TFBCF	591P-53383041-P00-U0V0	PD46903-0233
024-59188-000	IN20-38X5.0TFBSS	591P-53383042-A00-D4A0	PD46912
024-59195-000	IN20-38X5.0TFCF	591P-53383042-A00-U4V0	PD46912
024-59213-003	IN20-38X5.0TFSS	591P-53383042-AT0-U4A0	PD47012-0050
024-59223-0	IN20-38X5.0TFVCF	591P-53383042-P00-F0A0	PD47012-0050
024-59223-002	IN20-38X5.0TFVSS	591P-53383042-P00-U4A0	PD47021
024-59244-000	IN20-38X5.0TTCF	591P-53383042-P00-U4V0	PD47021
024-59244-003	IN20-38X5.0TTSS	591P-534120H0-P00-U4V0	PD47056-0100ATEX
024-59247-000	IN20-42X3.0TFBCF	591P-53415852-A00-U4A0	PD47056-0100ATEX
024-59250-000	IN20-42X3.0TFBSS	591P-53415852-A00-U4AP	PD47084
024-59259-000	IN20-42X3.0TFCF	591P-53415852-A00-U4V0	PD47084
024-59268-000	IN20-42X3.0TFSS	591P-53415852-P00-U4V0	PD47114
024-59268-001	IN20-42X3.0TFVCF	591P-534170H0-P00-U4V0	PD47114
024-59278-000	IN20-42X3.0TFVSS	591P-534270H0-P00-D4A0	PD47181
024-59279-000	IN20-42X3.0TTCF	591P-63338042-P00-U4A0	PD47181
024-59292-000	IN20-42X3.0TTSS	591P-63415852-A00-U4W0	PD47241
024-59297-000	IN20-42X4.0TFBCF	591P-734270H0-P00-U4A0	PD47241
024-59309-000	IN20-42X4.0TFBSS	591P-734270H0-P00-U4V0	PD47254-0002
024-59325-000	IN20-42X4.0TFCF	591PX-53235010-P00-U4A0	PD47254-0002
024-59329-000	IN20-42X4.0TFSS	591PX-53270010-P00-U4A0	PD47254-0003
024-59337-501	IN20-42X4.0TFVCF	591PX-53270010-PT0-U4A0	PD47254-0003
024-59347-000	IN20-42X4.0TFVSS	591PX-53311011-P00-U4A0	PD47254-0004
024-59347-002	IN20-42X4.0TTBCF	591PX-53311012-P00-U4A0	PD47254-0004
024-59374-000	IN20-42X4.0TTCF	591PX-53311012-PT0-U4A0	PD47254-0004
024-59394-000	IN20-42X4.0TTSS	591PX-53315011-P00-U4A0	PD47254-0004
024-59423-000	IN210QBNEXXX1	591PX-53315012-P00-U4A0	PD47254-0006
024-59434-002	IN210QBNEXXX5	591PX-53315012-PT0-U4A0	PD47254-0006
024-59456-0	IN24-38X5.0TFVCF	591S-0350-9-1-1-00	PD47254-0008
024-59470-000	IN24-38X5.0TFVSS	591S-1500-6-1-0-00	PD47254-0008
024-59501-003	IN24-42X3.0TFBCF	591S-1500-6-1-3-00	PD47254-0010
024-59503-0	IN24-42X3.0TFBSS	591S-2700-6-1-3-00	PD47254-0010
024-59503-001	IN24-42X3.0TFCF	592101/F+B	PD47254-0012
024-59503-501	IN24-42X3.0TFSS	592101/NL+B	PD47254-0012

024-59504-000	IN24-42X3.0TFVCF	592101+B	PD47254-0014
024-59537-0	IN24-42X3.0TFVSS	598P-53260010-TP00-U0V0	PD47254-0014
024-59543-0	IN24-42X3.0TTCF	598P-53260010-TP00-U4A0	PD47254-0016
024-59543-000	IN24-42X3.0TTSS	598P-53260010-TP00-U4V0	PD47254-0016
024-59543-001	IN24-42X4.0TFBCF	598P-53260010-TP00-U4W0	PD47337-0060
024-59546-001	IN24-42X4.0TFBSS	598P-73260010-TP00-U4V0	PD47337-0060
024-59581-001	IN24-42X4.0TFCF	599P-53260010-TP00-U0V0	PD47353
024-59595-000	IN24-42X4.0TFSS	599P-53260010-TP00-U4A0	PD47353
024-59600-000	IN24-42X4.0TFVCF	599P-53260010-TP00-U4V0	PD47405
024-59608-000	IN24-42X4.0TFVSS	599P-53260010-TP00-U4W0	PD47405
024-59618-0	IN24-42X4.0TTCF	599P-73260010-AP00-U4V0	PD47405
024-59635-502	IN24-42X4.0TTSS	599P-73260010-TP00-U4A0	PD47405
024-59646-001	IN24-50X3.0TFBCF	599P-73260010-TP00-U4V0	PD47420
024-59646-501	IN24-50X3.0TFBSS	599P-73260010-TP00-U4WP	PD47420
024-59666-000	IN24-50X3.0TFCF	5BBMTXS	PD47463-0030
024-59673-000	IN24-50X3.0TFSS	5BC5-316	PD47463-0030
024-59688-5	IN24-50X3.0TFVCF	5BF5-316	PD47579-0750
024-59688-500	IN24-50X3.0TFVSS	5BF5-B	PD47579-0750
024-59694-000	IN24-50X3.0TTCF	5BF5-M	PD47581
024-59759-000	IN24-50X3.0TTSS	5BLEN5-316	PD47581
024-59759-001	IN24-50X5.0TFBCF	5BLP5-316	PD47609-0575
024-59759-003	IN24-50X5.0TFBSS	5BMTXS	PD47609-0575
024-59759-5	IN24-50X5.0TFCF	5BMTXSBP	PD47630-0050
024-59759-500	IN24-50X5.0TFSS	5BMTXSS	PD47630-0050
024-59780-0	IN24-50X5.0TFVCF	5BN5-316	PD47648
024-59797-000	IN24-50X5.0TFVSS	5C3MXS	PD47648
024-59823-0	IN24-50X5.0TTB1/2CF	5C4OMXS	PD47663
024-59835-003	IN24-50X5.0TTBCF	5C5OMXS	PD47663
024-59853-000	IN24-50X5.0TTCF	5C6MXS	PD47666-0200
024-59856-000	IN24-50X5.0TTSS	5CMTXS	PD47666-0200
024-59856-003	IN24-50X6.0TFBCF	5CMTXSS	PD47682-0050
024-59856-004	IN24-50X6.0TFBSS	5CNG-16	PD47682-0050
024-59873-001	IN24-50X6.0TFCF	5CNG-4	PD47686-0233
024-59998-000	IN24-50X6.0TFSS	5CNG-6	PD47686-0233
024-63038-000	IN24-50X6.0TFVCF	5CNG-8	PD47717
024-63038-003	IN24-50X6.0TFVSS	5CNMXS	PD47717
024-63040-000	IN24-50X6.0TTCF	5ECR5-316	PD47718
024-63043-002	IN24-50X6.0TTSS	5EE5-316	PD47718
024-63086-003	IN310QLBNEXXX1	5EMTXS	PD47750-0200
024-63090-000	IN32-50X3.0TFBCF	5EMTXSS	PD47750-0200
024-63113-000	IN32-50X3.0TFBSS	5ET5-316	PD47795-0011
024-63115-000	IN32-50X3.0TFCF	5ET5-B	PD47795-0011
024-63115-002	IN32-50X3.0TFSS	5F3MXS	PD47795-0016
024-63127-000	IN32-50X3.0TFVCF	5F3MXSS	PD47795-0016
024-63127-003	IN32-50X3.0TFVSS	5F42EDMXS	PD47872
024-63140-0	IN32-50X3.0TTCF	5F42EDMXSV	PD47872
024-63145-001	IN32-50X3.0TTSS	5F4OMXS	PD47880
024-63160-003	IN32-50X5.0TFBCF	5F5OMXS	PD47880
024-63190-000	IN32-50X5.0TFBSS	5F5OMXSS	PD47881
024-63214-000	IN32-50X5.0TFCF	5F5OMXSV	PD47881
024-63222-001	IN32-50X5.0TFSS	5F642EDMXS	PD47882
024-63223-001	IN32-50X5.0TFVCF	5F64OMXS	PD47882
024-63246-000	IN32-50X5.0TFVSS	5F65OMXS	PD47883

024-63247-000	IN32-50X5.0TTCF	5F6MXS	PD47883
024-63247-014	IN32-50X5.0TTSS	5FA4N-316	PD47884
024-63252-000	IN32-50X6.0TFBCF	5FA6N-316	PD47884
024-63269-000	IN32-50X6.0TFBSS	5FF5-316	PD47885
024-63286-000	IN32-50X6.0TFCF	5FF5-B	PD47885
024-63295-000	IN32-50X6.0TFSS	5FF5-M	PD47949-0006
024-63317-031	IN32-50X6.0TFVCF	5FMTXS	PD47949-0006
024-63341-000	IN32-50X6.0TFVSS	5FNMTXS	PD47979
024-63353-000	IN32-50X6.0TTCF	5FNMTXSS	PD47979
024-63426-000	IN32-50X6.0TTSS	5FSC2N-316	PD47987
024-63450-003	IN32-60X3.0TFBCF	5FSC4GC-316	PD47987
024-63522-003	IN32-60X3.0TFBSS	5FSC4N-316	PD47992-0250
024-63528-000	IN32-60X3.0TFCF	5FSC4N-B	PD47992-0250
024-63551-000	IN32-60X3.0TFSS	5FSC8GC-316	PD47993ATEX
024-63579-000	IN32-60X3.0TFVCF	5G4MXS	PD47993ATEX
024-63593-001	IN32-60X3.0TFVSS	5HMTXS	PD48001
024-63597-001	IN32-60X3.0TTBCF	5HMTXSS	PD48001
024-63618-000	IN32-60X3.0TTCF	5JMTXS	PD48003
024-63618-003	IN32-60X3.0TTSS	5JMTXSS	PD48003
024-63618-500	IN32-60X5.0TFBCF	5KRAW21IW21	PD48005
024-63636-001	IN32-60X5.0TFBSS	5KRAW21IW21	PD48005
024-63658-000	IN32-60X5.0TFCF	5KRAW21IW2190	PD48061-0230
024-63663-001	IN32-60X5.0TFSS	5KRAW21IW2190	PD48061-0230
024-63663-5	IN32-60X5.0TFVCF	5M10C87OMXS	PD48150
024-63663-501	IN32-60X5.0TFVSS	5M10C8OMXS	PD48150
024-63665-000	IN32-60X5.0TTBCF	5M10F82EDMXS	PD48153
024-63665-001	IN32-60X5.0TTCF	5M10F82EDMXSS	PD48153
024-63665-500	IN32-60X5.0TTSS	5M10F87OMXS	PD48156
024-63665-501	IN32-60X6.0TFBCF	5M10F8OMXSS	PD48156
024-63727-038	IN32-60X6.0TFBSS	5M12C87OMXS	PD48159
024-63752-000	IN32-60X6.0TFCF	5M12C87OMXSBP	PD48159
024-63766-000	IN32-60X6.0TFSS	5M12C87OMXSBPNB	PD48162
024-63766-005	IN32-60X6.0TFVBCF	5M12C8OMXS	PD48162
024-63786-000	IN32-60X6.0TFVCF	5M12C8OMXSBP	PD48165
024-63807-000	IN32-60X6.0TFVSS	5M12F682EDMXS	PD48165
024-63810-000	IN32-60X6.0TTCF	5M12F682EDMXSS	PD48168
024-63810-500	IN32-60X6.0TTSS	5M12F687OMXS	PD48168
024-63849-000	IN402QBNBXXX1	5M12F68OMXS	PD48171
024-63855-002	IN4040WBNEXXX1	5M12F82EDMXS	PD48171
024-63866-002	IN40-60X3.0TFBCF	5M12F87OMXS	PD48174
024-63875-003	IN40-60X3.0TFBSS	5M12F87OMXSV	PD48174
024-63895-009	IN40-60X3.0TFCF	5M12F8OMXS	PD48177
024-63896-001	IN40-60X3.0TFSS	5M12F8OMXSS	PD48177
024-63907-000	IN40-60X3.0TFVCF	5M12V8OMXS	PD48180
024-63909-502	IN40-60X3.0TFVSS	5M14C87OMXS	PD48180
024-63927-019	IN40-60X3.0TTCF	5M14F82EDMXS	PD48183
024-63936-000	IN40-60X3.0TTSS	5M14F87OMXS	PD48183
024-63937-000	IN40-60X5.0TFBCF	5M14F8OMXS	PD48200
024-63938-000	IN40-60X5.0TFBSS	5M2SC5-316	PD48200
024-63940-000	IN40-60X5.0TFCF	5MA4N-316	PD48270
024-63940-001	IN40-60X5.0TFSS	5MA6N-316	PD48270
024-63994-0	IN40-60X5.0TFVCF	5MBT2N-316	PD48304
024-63994-000	IN40-60X5.0TFVSS	5MBT4N-316	PD48304

024-63998-000	IN40-60X5.0TTCF	5MRT4N-316	PD48324
024-64017-000	IN40-60X5.0TTSS	5MSC2N-316	PD48324
024-64030-000	IN40-60X6.0TFBCF	5MSC2N-B	PD48343-0233
024-64046-000	IN40-60X6.0TFBSS	5MSC4N-316	PD48343-0233
024-64046-001	IN40-60X6.0TFCF	5MSC4N-B	PD48397-0105
024-64052-000	IN40-60X6.0TFSS	5MSC6N-316	PD48397-0105
024-64054-007	IN40-60X6.0TFVCF	5MSC8N-316	PD48415-0025
024-64066-000	IN40-60X6.0TFVSS	5MSEL2N-316	PD48415-0025
024-64078-000	IN40-60X6.0TTCF	5MSEL4K-316	PD48423-0100
024-64097-0	IN40-60X6.0TTSS	5MSEL4N-316	PD48423-0100
024-64108-002	IN40-73X7.0TFBCF	5MSEL4N-B	PD48423-0200
024-64115-028	IN40-73X7.0TFBSS	5MSEL6N-316	PD48423-0200
024-64141-000	IN40-73X7.0TFCF	5MTC4N-316	PD48423-0300
024-64151-000	IN40-73X7.0TFSS	5NU5-316	PD48423-0300
024-64155-010	IN40-73X7.0TFVCF	5NU5-6MO	PD48423-0800
024-64168-000	IN40-73X7.0TFVSS	5-P-1056	PD48423-0800
024-64168-003	IN40-73X7.0TTCF	5-P-1107	PD48423-0900
024-64191-0	IN40-73X7.0TTSS	5-P-1108	PD48423-0900
024-64193-002	IN40-75X3.0TFBCF	5-P-1109	PD48423-1000
024-64194-001	IN40-75X3.0TFBSS	5-P-1110	PD48423-1000
024-64201-0	IN40-75X3.0TFCF	5-P-1160	PD48424-0160
024-64204-000	IN40-75X3.0TFSS	5-P-1161	PD48424-0160
024-64214-000	IN40-75X3.0TFVCF	5-P-1162	PD48495-1650
024-64214-003	IN40-75X3.0TFVSS	5-P-1212	PD48495-1650
024-64276-000	IN40-75X3.0TTCF	5-P-1225	PD48495-1670
024-64310-000	IN40-75X3.0TTSS	5-P-1296	PD48495-1670
024-64356-000	IN40-75X5.0TFBCF	5-P-1300	PD48496
024-64365-000	IN40-75X5.0TFBSS	5-P-1392	PD48496
024-64371-000	IN40-75X5.0TFCF	5-P-1417	PD48501
024-64386-000	IN40-75X5.0TFSS	5-P-202	PD48501
024-64392-000	IN40-75X5.0TFVCF	5-P-223	PD48531-0100-0400
024-64392-001	IN40-75X5.0TFVSS	5-P-226	PD48531-0100-0400
024-64393-000	IN40-75X5.0TTCF	5-P-294	PD48576
024-64393-001	IN40-75X5.0TTSS	5-P-295	PD48576
024-64394-0	IN410QLBNEXXX1	5-P-487	PD48581-0160
024-64394-000	IN420QLBNEXXX1	5-P-548	PD48581-0160
024-64395-000	IN48-75X3.0TFBCF	5-P-569	PD48582-0140
024-64398-0	IN48-75X3.0TFBSS	5-P-903	PD48582-0140
024-64417-000	IN48-75X3.0TFCF	5-P-905	PD48583-0160
024-64417-002	IN48-75X3.0TFSS	5-P-913	PD48583-0160
024-64422-001	IN48-75X3.0TFVCF	5-P-914	PD48584
024-64433-0	IN48-75X3.0TFVSS	5-P-915	PD48584
024-64433-000	IN48-75X3.0TTCF	5-P-966	PD48585-0300
024-64438-002	IN48-75X3.0TTSS	5-P-969	PD48585-0300
024-64440-000	IN48-75X5.0TFBCF	5PNMTXS	PD48617
024-64454-000	IN48-75X5.0TFBSS	5PNMTXSS	PD48617
024-64454-001	IN48-75X5.0TFCF	5PSG-4	PD48655
024-64454-003	IN48-75X5.0TFSS	5R6MXS	PD48655
024-64454-500	IN48-75X5.0TFVCF	5RHDMTXS	PD48663
024-64459-002	IN48-75X5.0TFVSS	5RHDMTXSCF	PD48663
024-64482-000	IN48-75X5.0TTCF	5RU4-316	PD48733
024-64485-003	IN48-75X5.0TTSS	5RU4-B	PD48733
024-64487-000	IN48-88.9X3.05TFSS	5RVP9072	PD48779

024-64492-000	IN48-88.9X3.05TFVSS	5RVP9072-CE	PD48779
024-64492-003	IN48-90X3.5TFBCF	5RVP9072-HT	PD48795
024-64510-000	IN48-90X3.5TFBSS	5RVS9072	PD48795
024-64541-500	IN48-90X3.5TFCF	5S4OMXS	PD48822-0015
024-64561-002	IN48-90X3.5TFSS	5S6MXS	PD48822-0015
024-64564-002	IN48-90X3.5TFVCF	5SC5-316	PD48863
024-64577-0	IN48-90X3.5TFVSS	5SC5-B	PD48863
024-64577-000	IN48-90X3.5TTCF	5TT4MXS	PD48864
024-64612-000	IN48-90X3.5TTSS	5TT4MXSS	PD48864
024-64624-0	IN48-90X5.0TFBCF	5TTP4MXS	PD48878
024-64656-0	IN48-90X5.0TFBSS	5TUCM6-316	PD48878
024-64656-000	IN48-90X5.0TFCF	5TUR4-316	PD48894
024-64670-009	IN48-90X5.0TFSS	5V3MXS	PD48894
024-64685-000	IN48-90X5.0TFVBCF	5V4OMXS	PD48897
024-64687-000	IN48-90X5.0TFVCF	5WEMTXWLNMS	PD48897
024-64697-000	IN48-90X5.0TFVSS	5WLNMS	PD48899
024-64729-000	IN48-90X5.0TTBCF	5WMTXWLNMS	PD48899
024-64734-000	IN48-90X5.0TTCF	5WMTXWLNMSS	PD48900
024-64735-000	IN48-90X5.0TTSS	5XASC5-316	PD48900
024-64792-000	IN48-90X9.0TFBCF	6 ALOK-316-SET	PD48903
024-64825-000	IN48-90X9.0TFBSS	6 ALOK-6MO-SET	PD48903
024-64851-000	IN48-90X9.0TFCF	6 ALOK-B-SET	PD48919
024-64852-000	IN48-90X9.0TFSS	6 ALOK-M-SET	PD48919
024-64864-0	IN48-90X9.0TFVCF	6 AOEG5-S	PD48928-0250
024-64888-000	IN48-90X9.0TFVSS	6 AOEL6-S	PD48928-0250
024-64892-000	IN48-90X9.0TTCF	6 AOEL6-S BP	PD48930-0140
024-64913-000	IN48-90X9.0TTSS	6 AOEL6-S V0894	PD48930-0140
024-64913-4	IN510QBNEXXX1	6 AOG5JG5-S	PD48930-0160
024-64914-000	IN510QBNEXXX5	6 BL-S	PD48930-0160
024-64924-500	IN520QLBNEXXX1	6 BL-S BP	PD48936_ANC5080028-0325
024-64968-000	IN610QLBNEXXX1	6 BL-SS	PD48936_ANC5080028-0325
024-68003-000	IN620QLBNEXXX1	6 BMP7-SS	PD48936_BNC5080028-0335
024-68041-013	IN64-115X4.0TFBCF	6 BODY DIE	PD48936_BNC5080028-0335
024-68058-0	IN64-115X4.0TFBSS	6 BTX-B	PD48955
024-68059-000	IN64-115X4.0TFCF	6 BTX-S	PD48955
024-68065-000	IN64-115X4.0TFSS	6 BTX-SS	PD48955
024-68077-000	IN64-115X4.0TFVCF	6 BUHLO-S	PD48955
024-68089-000	IN64-115X4.0TTCF	6 BU-S	PD48956
024-68102-000	IN64-115X4.0TTSS	6 BU-SS	PD48956
024-68120-0	IN702QLBNEXXX1	6 BZ-B	PD48956
024-68124-000	IN705QBNEXXX1	6 BZP-SS	PD48956
024-68136-009	IN710CBNEXXX1	6 BZ-SS	PD48978
024-68146-000	IN710QBNEXXX1	6 C5BU-S	PD48978
024-68156-000	IN710QBNEXXX4	6 C5OLO-S	PD48983-0025
024-68174-000	IN710QLBNEXXX1	6 C5OLO-S V0894	PD48983-0025
024-68193-0	IN710QLBNEXXX3	6 C5OU-S	PD48984
024-68194-000	IN720QBNEXXX1	6 C5OX-S	PD48984
024-68219-000	IN720QLBNBXXX1	6 C6BU-S	PD48985-0290
024-68232-003	IN720QLBNEXXX1	6 C6BU-SS	PD48985-0290
024-68241-000	IN80-125X4.0TFCF	6 C6LO-S	PD48992_ANC1032022-0050
024-68250-000	IN80-139.7X4.0TFBCF	6 C6X-S	PD48992_ANC1032022-0050
024-68266-500	IN80-139.7X4.0TFVCF	6 C6X-SS	PD48992_ANC1032022-0125
024-68277-000	IN80-140X4.5TFBCF	6 CBU-S	PD48992_ANC1032022-0125

024-68313-000	IN80-140X4.5TFCF	6 CC5OLO-S	PD48992_ANC1032022-0150
024-68315-000	IN80-140X4.5TFSS	6 CC5OX-S	PD48992_ANC1032022-0150
024-68316-0	IN80-140X4.5TFVCF	6 CCCTX-S	PD48992_ANC1032022-0200
024-68320-000	IN80-140X4.5TTCF	6 CCTX-S	PD48992_ANC1032022-0200
024-68322-000	IN80-140X4.5TTSS	6 CLO-S	PD48993_ANC1040024-0125
024-68336-000	IN810QBNEXXX1	6 CP-B	PD48993_ANC1040024-0125
024-68359-000	IN810QLBNEXXX1	6 CPI-SS-SET	PD48993_ANC1040024-0200
024-68363-031	IN810QLBNEXXX3	6 CP-M	PD48993_ANC1040024-0200
024-68382-000	IN810QLVNEXXX3	6 CP-SS	PD48993_ANC1040024-0260
024-68384-000	IN820QLBNEXXX1	6 CP-SSHP	PD48993_ANC1040024-0260
024-68411-000	IN820QLBNEXXX3	6 CTX-B	PD48993_ANC1040024-0300
024-68427-000	IN96-165X5.0TFCF	6 CTX-S	PD48993_ANC1040024-0300
024-68464-000	IN96-165X5.0TFVCF	6 CW-SS	PD48993_ANC1040024-0500
024-68465-001	IOS1210EUR	6 DBU-S	PD48993_ANC1040024-0500
024-68478-002	IOS1220EUR	6 DI FRIT-10MIC-SS	PD48994_ANC1050032-0200
024-68483-0	IPC5/4-STF-7,62	6 DI FRIT-2MIC-SS	PD48994_ANC1050032-0200
024-68483-023	IPD12212130	6 DI FRIT-5MIC-SS	PD48994_ANC1050032-0250
024-68490-000	IPD12222130	6 DTX-B	PD48994_ANC1050032-0250
024-68503-009	IPD12222230	6 DTX-S	PD48994_ANC1050032-0320
024-68510-000	IPD12223230	6 DW-SS	PD48994_ANC1050032-0320
024-68552-000	IPD12322130	6 EBU-S	PD48994_ANC1050032-0500
024-68608-0	IPD12322230	6 ELO-S	PD48994_ANC1050032-0500
024-68608-000	IPD12323230	6 ETX-S	PD48994_ANC1050032-1050
024-68638-000	IPD12325230	6 EW-SS	PD48994_ANC1050032-1050
024-68638-024	IPDR12112240	6 F5BU-S	PD48995_ANC1063032-0320
024-68678-000	IPDZ12122230	6 F5OHAO-S	PD48995_ANC1063032-0320
024-68680-000	ISA04571X	6 F5OLO-S	PD48996_ANC1080040-0125
024-68688-000	ISA0X	6 F5OX-S	PD48996_ANC1080040-0125
024-68695-000	ISA24571X	6 F65OL-S	PD48996_ANC1080040-0150
024-68704-000	ISA2X	6 F65OX-S	PD48996_ANC1080040-0150
024-68711-000	ISA34571X	6 F6X-S	PD48996_ANC1080040-0180
024-68713-028	ISA3X	6 FBU-S	PD48996_ANC1080040-0180
024-68730-000	ISA44571X	6 FBU-SS	PD48996_ANC1080040-0350
024-68730-003	ISA4X	6 FF5OLO-S	PD48996_ANC1080040-0350
024-68734-000	ISA54571X	6 FF5OX-S	PD48997_ANC1010040-0125
024-68779-000	ISA5X	6 FLO-S	PD48997_ANC1010040-0125
024-68779-003	ISA64571X	6 FNL-S	PD48997_ANC1010040-0200
024-68802-000	ISA6X	6 FNMP7-SS	PD48997_ANC1010040-0200
024-68853-000	ISB24571X	6 FNTX-S	PD48997_ANC1010040-0500
024-68856-029	ISB2X	6 FNTX-SS	PD48997_ANC1010040-0500
024-68867-000	ISB3X	6 FNU-S	PD48997_ANC1010040-0820
024-68890-038	ISB4X	6 FNZ-B	PD48997_ANC1010040-0820
024-68912-000	ISB5X	6 FNZ-SS	PD48997_ANC1010040-1000
024-68913-000	ISC14571X	6 FTX-S	PD48997_ANC1010040-1000
024-68916-000	ISC1X	6 FW-SS	PD48997_ANC1010040-1400
024-68947-000	ISC24571X	6 FX-SS	PD48997_ANC1010040-1400
024-68948-000	ISC2X	6 FX-SSHP	PD48997_ANC1010040-1500
024-68979-000	ISC34571X	6 G6X-S	PD48997_ANC1010040-1500
024-68979-001	ISC3VZX	6 G6X-SS	PD48997_ANC1010040-1950
024-68979-003	ISC3X	6 GAP GAUGE	PD48997_ANC1010040-1950
024-68979-500	ISC44571X	6 GBU-S	PD49021
024-68988-500	ISC4X	6 GTX-S	PD49021
024-69019-0	ISC54571X	6 GW-SS	PD49024

024-69022-0	ISC5X	6 HBU-S	PD49024
024-69108-000	ISC6X	6 HL6-S	PD49025
024-69121-000	ISC7X	6 HP5N-S	PD49025
024-69123-0	ISC8X	6 HP5ON-S	PD49027
024-69148-000	ISO4032-M12-10X	6 HP5ON-S E0893	PD49027
024-69148-003	ISO4032-M12-8VZX	6 HP5ON-S V0894	PD49028
024-69148-500	ISO4032-M16-8VZX	6 HP5ON-SS	PD49028
024-69151-000	ISO4032-M20-8VZX	6 HTX-S	PD49045
024-69153-000	ISVUNITTL/HTL2I/2O	6 HW-SS	PD49045
024-69180-000	ITL06L/06+08S	6 HX6-S	PD49059-5
024-69180-002	ITL06L/06+08S0.2B	6 JBU-S	PD49059-5
024-69215-000	ITL06L/06+08SODD	6 JBU-SS	PD49061-3
024-69217-003	ITL06L/06+08SVP100	6 JLO-S	PD49061-3
024-69228-0	ITL06L0.2B	6 JLO-S V0894	PD49062-4
024-69228-000	ITL06L0.2B71	6 JTX-B	PD49062-4
024-69272-038	ITL06L0.2BVIT	6 JW-SS	PD49078
024-69276-000	ITL06L0.5B	6 JX6-S	PD49078
024-69276-002	ITL06L0.5B71	6 KBZ-SS	PD49078ATEX
024-69284-009	ITL06L0.5BVIT	6 KLO-S	PD49078ATEX
024-69285-0	ITL06L2B	6 KLO-SS	PD49089
024-69285-000	ITL06L2B71	6 KTX-S	PD49089
024-69285-002	ITL06L2BVIT	6 KTX-SS	PD49091
024-69290-0	ITL06L3B	6 LHB3-S	PD49091
024-69306-000	ITL06L3B71	6 LHBU-S	PD49093
024-69331-002	ITL06L3BPTFE71	6 LOHB3-S	PD49093
024-69337-000	ITL06L3BVIT	6 LOHL6-S	PD49095
024-69341-500	ITL06L5B	6 LOHX6-S	PD49095
024-69342-0	ITL06L5BVIT	6 MBU-S	PD49103
024-69347-503	ITL06L6B	6 MDF-SS	PD49103
024-69352-000	ITL06L71	6 MPBF-SS	PD49105
024-69352-002	ITL06LSATZW.VP.	6 MPFF-SS	PD49105
024-69352-009	ITL06LSTL4	6 MTX-S	PD49107
024-69359-000	ITL06LVIT	6 NUT DIE	PD49107
024-69360-0	ITL08L/10S	6 OBU-S	PD49109
024-69366-000	ITL08L0.2B	6 OTX-S	PD49109
024-69369-000	ITL08L0.2B71	6 OTX-SS	PD49111
024-69434-009	ITL08L0.2BVIT	6 P5N-S	PD49111
024-69446-000	ITL08L0.5B	6 P5ON-S	PD49148
024-69447-003	ITL08L0.5B71	6 P5ON-S V0894	PD49148
024-69461-501	ITL08L0.5B71SATZWVP	6 PANEL NUT-SS	PD49172
024-69490-0	ITL08L0.5BSATZWVP	6 PH-B	PD49172
024-69490-000	ITL08L0.5BVIT	6 PH-HC	PD49210-0002
024-69499-500	ITL08L2B	6 PHH-SS	PD49210-0002
024-69501-000	ITL08L2B71	6 PH-SS	PD49210-0002
024-69501-002	ITL08L3B	6 PH-SSHP	PD49210-0002
024-69501-003	ITL08L3B71	6 PNBMP7-SS	PD49210-0004
024-69515-0	ITL08L3BVIT	6 PNBZ-B	PD49210-0004
024-69515-000	ITL08L6BTEF	6 PNBZ-SS	PD49210-0006
024-69520-002	ITL08L71	6 PNLOBA-S	PD49210-0006
024-69529-000	ITL08LOF71SATZWVP	6 PNLO-S	PD49210-0008
024-69541-000	ITL08LOFED	6 PNL-S	PD49210-0008
024-69594-000	ITL08LOFED71	6 PNTX-S	PD49210-0010
024-69594-002	ITL08LOFESV	6 PNTX-SS	PD49210-0010

024-69595-000	ITL08LVIT	6 PNU-S	PD49210-0012
024-69636-400	ITL10L/12S	6 R5BU-S	PD49210-0012
024-69660-000	ITL10L/12S3B	6 R5OLO-S	PD49315_ANC6063332-0080
024-69675-000	ITL10L0.2B	6 R5OX-S	PD49315_ANC6063332-0080
024-69683-002	ITL10L0.2B71	6 R5OX-SS	PD49317_ANC6010340-0160
024-69685-5	ITL10L0.2BVIT	6 R6BU-S	PD49317_ANC6010340-0160
024-69691-504	ITL10L0.5B	6 R6LO-S	PD49325
024-69711-000	ITL10L0.5B71	6 R6X-S	PD49325
024-69712-000	ITL10L0.5BVIT	6 R6X-SS	PD49363
024-69732-000	ITL10L2B	6 RTX-B	PD49363
024-69772-000	ITL10L2BVIT	6 RTX-S	PD49364
024-69783-000	ITL10L3B	6 S5OX-S	PD49364
024-69812-000	ITL10L3B71	6 S5OX-SS	PD49367-0200
024-69818-000	ITL10L3BVIT	6 S6BU-S	PD49367-0200
024-69833-0	ITL10L71	6 S6LO-S	PD49383-0035
024-69850-000	ITL10LVIT	6 S6LO-S PL CAP PLUG	PD49383-0035
024-69851-000	ITL10LVITOFESATZVP	6 S6X-S	PD49428-0360
024-69855-000	ITL12L/14S	6 S6X-SS	PD49428-0360
024-69874-500	ITL12L/14S2B	6 SBR	PD49428-0450
024-69877-0	ITL12L/14SODURC	6 STX-SS	PD49428-0450
024-69886-000	ITL12L/14SOKEG	6 TIZ .188-SS	PD49428-0650
024-69889-000	ITL12L/14SPTFE	6 TIZ .250-B	PD49428-0650
024-69913-000	ITL12L0.2B	6 TIZ .250-SS	PD49441-2820
024-69945-009	ITL12L0.2BV.O.DU.SVP	6 TL-S	PD49441-2820
024-69956-003	ITL12L0.2BVIT	6 TPL-S	PD49471-0010
024-69957-000	ITL12L0.2BVITSV	6 TPL-S BP	PD49471-0010
024-69988-003	ITL12L0.5B	6 TPL-SS	PD49475-0100
024-72003-0	ITL12L0.5B71	6 TU-S	PD49475-0100
024-72010-000	ITL12L0.5BVIT	6 TU-SS	PD49476-0140/010
024-72010-002	ITL12L2B	6 TX-B	PD49476-0140/010
024-72011-000	ITL12L2BVIT	6 TX-S	PD49477-0640
024-72011-002	ITL12L3B	6 TX-S BP	PD49477-0640
024-72017-0	ITL12L3BDECK3	6 TX-SS	PD49477-1000
024-72017-017	ITL12L5B	6 TZ-B	PD49477-1000
024-72039-000	ITL12L6B	6 TZ-SS	PD49477-1100
024-72045-000	ITL12L71	6 TZ-T	PD49477-1100
024-72049-000	ITL12LOFED	6 TZ-ZY	PD49478-0140
024-72087-0	ITL12LVIT	6 V5OLO-S	PD49478-0140
024-72087-000	ITL15L/16S	6 V5OX-S	PD49494-0150
024-72103-000	ITL15L/16SPTFE	6 V5OX-SS	PD49494-0150
024-72110-001	ITL15L0.2B	6 V6LO-S	PD49494-0200
024-72112-001	ITL15L0.2B71	6 V6X-S	PD49494-0200
024-72128-0	ITL15L0.2BVIT	6 V6X-S PL CAP PLUG	PD49494-0250
024-72129-003	ITL15L0.5B	6 V6X-SS	PD49494-0250
024-72135-000	ITL15L0.5B71	6 VBU-S	PD49494-0300
024-72159-5	ITL15L0.5BVIT	6 VTX-S	PD49494-0300
024-72170-000	ITL15L0.5BVP150	6 VTX-SS	PD49500
024-72176-000	ITL15L2B	6 WBU-S	PD49500
024-72207-000	ITL15L2B71	6 WEBU-S	PD49552
024-72210-000	ITL15L3B	6 WELO-S	PD49552
024-72246-000	ITL15L6B	6 WELO-WLNL-S	PD49574-0050
024-72247-000	ITL15L71	6 WETX-WLN-SS	PD49574-0050
024-72270-000	ITL15LOFED	6 WF5OLO-WLNL-S	PD49579-0120

024-72270-001	ITL15LOFEDSATZW.VIVP.	6 WFTX-S	PD49579-0120
024-72270-500	ITL15LOFEDSATZW.VP.	6 WGTX-S	PD49581
024-72295-000	ITL15LOFEDVIT	6 WGTX-WLN-S	PD49581
024-72296-000	ITL15LSTL4	6 WJJLO-S	PD49581
024-72336-500	ITL15LVIT	6 WJJLO-WLNL-S	PD49581
024-72384-000	ITL18L/20S	6 WJJTX-WLN-S	PD49582
024-72398-002	ITL18L/20SPTFE	6 WJLO-S	PD49582
024-72419-000	ITL18L0.2B	6 WJLO-WLNL-S	PD49582
024-72426-000	ITL18L0.2B71	6 WJTX-WLN-S	PD49582
024-72427-000	ITL18L0.5B	6 WLNL-S	PD49583
024-72455-000	ITL18L0.5B71	6 WLN-S	PD49583
024-72465-015	ITL18L0.5BVIT	6 WLO-S	PD49585
024-72486-020	ITL18L0.5BVITLO28	6 WLO-WLNL-S	PD49585
024-72497-001	ITL18L2B	6 WLZ-SS	PD49586
024-72498-000	ITL18L2B71	6 WNLO-S	PD49586
024-72498-001	ITL18L3B	6 WNTX-WLN-S	PD49587
024-72498-003	ITL18L4B	6 WTX-S	PD49587
024-72498-503	ITL18L6B	6 XHBU-S	PD49589
024-72524-000	ITL18L71	6 XHBU-SS	PD49589
024-72534-001	ITL18LOFED	6 XHL6-S	PD49595-0100
024-72534-5	ITL18LOFED SATZW.V.	6 XHLO-S	PD49595-0100
024-72534-501	ITL18LOFED71	6/10/15.3TPUV04	PD49600
024-72537-500	ITL18LVIT	600.4	PD49600
024-72537-501	ITL22L/25S	6000 71 00	PD49627-0025
024-72591-000	ITL22L/25SPTFE	600003PLUG	PD49627-0025
024-72591-001	ITL22L0.2B	600003PLUG	PD49632-0600
024-72658-0	ITL22L0.2B71	600029P0001	PD49632-0600
024-72750-000	ITL22L0.2BVIT	600047P0001	PD49736-0200
024-72750-500	ITL22L0.5B	6000-63-00200-0000-000000	PD49736-0200
024-72784-000	ITL22L0.5B71	6000-63-00200-0000-000000	PD49774-0160
024-72786-0	ITL22L0.5BVIT	6000-63-00240-1000-000000	PD49774-0160
024-72786-000	ITL22L1.5B	6000-63-00240-1000-000000	PD49944
024-72805-000	ITL22L2B	6000-63-00280-0000-000000	PD49944
024-72815-001	ITL22L3B	6000-63-00280-0000-000000	PD49980-0400
024-72816-0	ITL22L3B71	6000-63-00400-0000-000000	PD49980-0400
024-72816-001	ITL22L4B	6000-63-00400-0000-000000	PD49982
024-72816-002	ITL22L5B	6000-63-00425-0000-000000	PD49982
024-72834-0	ITL22L6B	6000-63-00425-0000-000000	PD49989
024-72838-000	ITL22L71	6000-63-00450-0000-000000	PD49989
024-72841-000	ITL22LOFOD	6000-63-00450-0000-000000	PD49992
024-72902-000	ITL22LOFODVITSV	6000-63-00500-0000-000000	PD49992
024-72903-000	ITL22LVIT	6000-63-00500-0000-000000	PD51521
024-72907-003	ITL28L/30S	6000-63-00580-0000-000000	PD51521
024-72915-000	ITL28L/30S6B	6000-63-00580-0000-000000	PD51522-0650
024-72915-500	ITL28L/30SOFEDSATZW.VP	6000-63-00600-0000-000000	PD51522-0650
024-72942-000	ITL28L/30SSATZW.VP	6000-63-00600-0000-000000	PD51534
024-72944-000	ITL28L/30SVP25	6000-63-00640-0000-000000	PD51534
024-72946-0	ITL28L0.2B	6000-63-00640-0000-000000	PD51559-0050
024-72947-0	ITL28L0.2B71	6000-63-00650-0000-000000	PD51559-0050
024-72947-003	ITL28L0.2BVIT	6000-63-00650-0000-000000	PD60006
024-72948-000	ITL28L0.5B	6000-63-00680-0000-000000	PD60006
024-72956-000	ITL28L0.5BVIT	6000-63-00680-0000-000000	PD60008
024-72957-000	ITL28L0.5BVITSV	6000-63-00750-0000-000000	PD60008

024-72969-000	ITL28L2B	6000-63-00750-0000-000000	PD60009
024-72981-001	ITL28L3B	6000-63-00780-0000-000000	PD60009
024-72993-000	ITL28L5B	6000-63-00780-0000-000000	PD60011
024-73066-000	ITL28L71	6000-63-00800-3000-000000	PD60011
024-73092-000	ITL28LVIT	6000-63-00800-3000-000000	PD60194
024-73105-000	ITL35+42L/38S	6000-63-00850-0000-000000	PD60194
024-73146-000	ITL35L0.2B	6000-63-00850-0000-000000	PD60207
024-73147-000	ITL35L0.2B71	6000-63-01050-0010-100000	PD60207
024-73147-400	ITL35L0.2BVIT	6000-63-01050-0010-100000	PD60208
024-73148-000	ITL35L0.5B	6000-63-01220-0000-000000	PD60208
024-73149-0	ITL35L0.5B71	6000-63-01220-0000-000000	PD70113
024-73149-000	ITL35L0.5BVIT	6000-63-01280-0000-000000	PD70113
024-73168-000	ITL35L2B	6000-63-01280-0000-000000	PD70136-0080
024-73168-001	ITL35L2BVIT	6000-63-01500-0000-000000	PD70136-0080
024-73168-500	ITL35L3B	6000-63-01500-0000-000000	PD70140-0050
024-73168-501	ITL35L5B	6000-63-01720-0000-000000	PD70140-0050
024-73236-0	ITL35L71	6000-63-01720-0000-000000	PD70250-0410
024-73237-000	ITL35LOFED+3DECKSV	6000-63-03185-0000-0012C2	PD70250-0410
024-73239-000	ITL35LOFEDSATZW.V.	6000-63-03185-0000-0012C2	PD70253-0025
024-73250-000	ITL35LOFEDVIT	6000-63-04050-0000-000000	PD70253-0025
024-73251-000	ITL35LOFESV	6000-63-04050-0000-000000	PD70268
024-73265-010	ITL35LVIT	6000-63-04186-0000-0012B2	PD70268
024-73275-0	ITLDN400.1B	6000-63-04186-0000-0012B2	PD70282
024-73289-010	J004B-11	600137P0001	PD70282
024-73298-000	J007-23-01	6-002-N552-9	PD70284
024-73319-000	J02A2WN	6006KBIW13MVN	PD70284
024-73323-0	J02A2ZN	6006KBTR08MVN	PD70297-0050
024-73352-000	J02A2ZV	6006SBAO10MVN	PD70297-0050
024-73421-001	J02B2ZN	6006SBIW10MVN	PD70308-0650
024-73444-014	J02E2ZN	6006SFAK10MXN	PD70308-0650
024-73448-001	J03002	6006SFIW13MXN	PD70314-0405
024-73449-001	J03002	6009KBAW17MVN	PD70314-0405
024-73461-000	J04A2WN	6009KBIW17MVN	PD70315-0200ATEX
024-73510-010	J04A2ZN	6009KBTF12MVN	PD70315-0200ATEX
024-73514-000	J04C2ZN	6009KBTR10MVN	PD70357-0085
024-73532-010	J04D3ZN	6009SBAO13MVN	PD70357-0085
024-73535-000	J04E2ZN	6009SBAO17MVN	PD70359-0035
024-73538-009	J04E2ZN565	6009SBAO21MVN	PD70359-0035
024-73554-000	J05003	6009SBAW21MVN	PD70360-0195
024-73565-000	J05003	6009SBIW13MVN	PD70360-0195
024-73565-003	J06A2WN	6009SBIW17MVN	PD70360-0245
024-73590-001	J111Q3	6009SFAK13MXN	PD70360-0245
024-73651-000	J111Q3	6009SFAK17MXN	PD70361-0155/214
024-73692-000	J1A060TN	6009SFAW21MXN	PD70361-0155/214
024-73709-502	J1A060TN452	6009SFIW17MXN	PD70383-0015
024-73713-500	J1A060TN475	6010FIL	PD70383-0015
024-73730-000	J1A060TN528	6010FIL	PD70397
024-73733-000	J1A060WN	6010FIL	PD70397
024-73747-003	J1A060ZN	6010FIL	PD70422-0015
024-73772-000	J1A125ZN	601-12	PD70422-0015
024-73772-5	J2A060ZN	601-16	PD70438
024-73788-002	J3PK4	6012KBAW21MVN	PD70438
024-73790-010	J3PK6	6012KBIW21MVN	PD70445-0015

024-73815-000	J4230-1VUCS	6012KBTF16MVN	PD70445-0015
024-73830-000	J5PK10-6	6012SBAO17MVN	PD70445-0050
024-73845-0	J5PK6-4	6012SBAO21MVN	PD70445-0050
024-73874-000	J5PK8-4	6012SBAO26MVN	PD70465
024-73879-000	J5PK8-6	6012SBAW26MVN	PD70465
024-73879-003	J6PK6-4	6012SFAK17MXN	PD70493-0040
024-73890-002	J6PK8-4	6012SFAK21MXN	PD70493-0040
024-73898-001	J6PK8-6	6012SFAW26MXN	PD70497-0025
024-73932-000	JAFPJ1-70	6012SFIW21MXN	PD70497-0025
024-73947-001	JAFPJ1-70	601-4	PD70507-0250
024-73947-003	JBDX00/020-A	601-6	PD70507-0250
024-73947-500	JBDX00/020-A	6016KBAW26MVN	PD70512
024-73947-503	JBMB10	6016KBIW26MVN	PD70512
024-73951-000	JBMB12	6016KBTF19MVN	PD70524-1670
024-73981-5	JBMB14	6016SBAO26SVZ	PD70524-1670
024-73981-500	JBMB16	6016SBAO33SVZ	PD70558-0050
024-76001-000	JBMB18	6016SBAW33SVZ	PD70558-0050
024-76031-000	JBMB20	6016SBIW26SVZ	PD70571
024-76041-000	JBMB22	6016SFAK26SXZ	PD70571
024-76110-001	JBMB4	6016SFIW26SXZ	PD70571-0130-0065
024-76121-000	JBMB6	601-8	PD70571-0130-0065
024-76128-001	JBMB8	601NX-4-4	PD70586
024-76133-003	JBPL10/12	6030 06 00	PD70586
024-76154-000	JBPL11/14	6030FIL	PD70754
024-76169-000	JBPL2.7/4	6030FIL	PD70754
024-76180-010	JBPL4/6	6040FIL	PDC-4
024-76182-0	JBPL6/8	6040FIL	PDC-6
024-76184-000	JBPL7.5/10	605-00003-8	PDC-8
024-76249-0	JBPL8/10	605-00008-8	PDCF1/L/35BS
024-76342-000	JBRAB10	605-00031-8	PDCF1/S/35BS
024-76347-010	JBRAB12	605-00040-8	PDCF112/L/50BS
024-76371-000	JBRAB14	605-00043-8	PDCF112/S/51BS
024-76382-000	JBRAB16	605-00060-8	PDCF114/L/43BS
024-76404-0	JBRAB6	605-00062-8	PDCF114/S/44BS
024-76413-010	JBRAB8	605-00064-8	PDCF12/L/22BS
024-76432-0	JBZ 10-10-10-SS	605-00071-8	PDCF12/S/22BS
024-76432-000	JBZ 12-12-12-SS	605-00091-8	PDCF2/L/62BS
024-76432-009	JBZ 16-16-16-SS	605-00108-8	PDCF2/S/61BS
024-76432-018	JBZ 20-20-20-SS	605-00113-8	PDCF212/L/76BS
024-76433-000	JBZ 25-25-25-SS	605-00114-8	PDCF212/S/80BS
024-76434-000	JBZ 6-6-6-SS	605-00124-8	PDCF3/L/90BS
024-76450-0	JBZ 8-8-8-B	605-00126-8	PDCF3/S/90BS
024-76470-000	JBZ 8-8-8-SS	605-00139-8	PDCF312/L/102BS
024-76470-002	JHFS4X1+2X	605-10002-3	PDCF312/S/102BS
024-76471-0	JJ025A02	6052-00-G	PDCF34/L/28BS
024-76497-0	JJ025A02	6053-CAN-00-G	PDCF34/S/28BS
024-76510-003	JJ032A02	6053-CNET-00-G	PDCF38/L/18BS
024-76517-500	JJ032A02	6053-DNET-00-G	PDCF38/S/18BS
024-76520-000	JJ040A02	6053-EI00-00-G	PDCF4/L/114BS
024-76520-002	JJ040A02	6053-EI00-04	PDCF4/S/114BS
024-76520-500	JJ040A03	6053-ENET-00-G	PDCP-12
024-76521-0	JJ040A03	6053-LINK-00-G	PDCP-16
024-76521-000	JJ050A02	6053-PROF-00-G	PDE2597PM-CASE

024-76521-003	JJ050A02	6054-HTTL-00	PDE2597PM-CASE
024-76521-5	JJ063A02	6055-CAN-00	PDFA0407
024-76521-502	JJ063A02	6055-CNET-00	PDFA0407V
024-76522-000	JJ080A02	6055-DNET-00	PDFA4020
024-76522-001	JJ080A02	6055-DNET-00-E	PDFS080BNBRSS
024-76526-023	JJ100A02	6055-EI00-00	PDFS080BS
024-76558-000	JJ100A02	6055-EI00-04	PDFS080BSS
024-76569-012	JJ125A02	6055-EI00-10	PDFS080BSU
024-76637-000	JJ125A02	6055-ENET-00	PDFS080G38NBRSS
024-76637-500	JJ125A22	6055-LINK-00	PDFS080G38S
024-76682-000	JJ125A22	6055-MBP-00	PDFS080G38SS
024-76694-001	JJ200A02	6055-PROF-00	PDFS080G38SU
024-76699-002	JJ200A02	6055-PROF-10	PDFS080GNBRSS
024-76700-002	JJDX10-A	605-90005-2	PDFS080GS
024-76740-0	JJDX10-A	6-076-N552-9	PDFS080GSS
024-76757-000	JJDX20-A	608KFIW13MVN	PDFS080GSU
024-76779-0	JJDX20-A	608KFTF08MVN	PDFS080S17.5NBRSS
024-76793-003	JJDX25-A	608KFTF10MVN	PDFS080S17.5S
024-76801-000	JJDX25-A	608KFTF12MVN	PDFS080S17.5SS
024-76823-003	JJDX30-A	608KFTH10MVN	PDFS080S17.5SU
024-76847-003	JJDX30-A	608KFTH12MVN	PDFS080S21.6NBRSS
024-76851-000	JJDX35-A	608KFTP10MVN	PDFS080S21.6S
024-76870-000	JJDX35-A	608KFTP13MVN	PDFS080S21.6SS
024-76876-003	JJF3	608KFTR10MVN	PDFS080S21.6SU
024-76913-000	JJF3	608KFTR12MVN	PDFS100BNBRSS
024-76918-000	JJPX040/5244	608SFAH10MXN	PDFS100BS
024-76923-009	JJPX040/5244	608SFAH13MXN	PDFS100BSS
024-76939-000	JJPX063A22/5023	608SFAM10MXN	PDFS100BSU
024-76954-000	JJPX063A22/5023	608SFAR10MXN	PDFS100GNBRSS
024-77020-000	JJPX080A22/5023	608SFAR13MXN	PDFS100GS
024-77041-0	JJPX080A22/5023	608SFAR17MXN	PDFS100GSS
024-77041-000	JJPX100A22/5023	608SFAW10MXN	PDFS100GSU
024-77046-010	JJPX100A22/5023	608SFAW13MXN	PDFS100S27.2NBRSS
024-77056-000	JJPX125A22/5023	608SFAW17MXN	PDFS100S27.2S
024-77091-002	JJPX125A22/5023	608SFIW10MXN	PDFS100S27.2SS
024-77095-0	JJPX200A03/5956	608SFIW13MXN	PDFS100S27.2SU
024-77095-002	JJPX200A03/5956	608VN1005MXN	PDFS102BNBRSS
024-77100-000	JJVB36	608VN1010MXN	PDFS102BS
024-77107-002	JJVB36	608VN1015MXN	PDFS102BSS
024-77116-500	JJVB48	608VN1305MXN	PDFS102BSU
024-77126-0	JJVB48	608VN1310MXN	PDFS102GNBRSS
024-77147-510	JJVB60	608VN1315MXN	PDFS102GS
024-77150-5	JJVB60	608VN1320MXN	PDFS102GSS
024-77151-500	JJVBH48	6090-63-00700-0000-000000	PDFS102GSU
024-77187-0	JJVBH48	6090-63-00700-0000-000000	PDFS102S34.1NBRSS
024-77265-012	JJVBH60	60BF4433	PDFS102S34.1S
024-77266-012	JJVBH60	60BF4433-SOG	PDFS102S34.1SS
024-77286-003	JLZ 10-10-6-SS	60BF4433-SOGWO	PDFS102S34.1SU
024-77307-000	JLZ 10-6-10-SS	60BF6633	PDFS104BNBRSS
024-77324-000	JLZ 12-12-10-SS	60BF9933	PDFS104BS
024-77334-000	JLZ 12-12-6-SS	60BF9933-SOG	PDFS104BSS
024-77342-000	JLZ 12-12-8-SS	60C6-6F	PDFS104BSU
024-77371-001	JLZ 12-6-6-SS	60F4433	PDFS104GNBRSS

024-77390-000	JLZ 16-12-16-SS	60F4433	PDFS104GS
024-77407-040	JLZ 16-16-12-SS	60F4433-ER1049	PDFS104GSS
024-77415-000	JLZ 16-16-6-SS	60F4433-SOG	PDFS104GSU
024-77441-000	JLZ 18-18-12-SS	60F4433-SOGWO	PDFS104S42.8NBRSS
024-77464-000	JLZ 25-25-12-SS	60F4433-WO	PDFS104S42.8S
024-77465-000	JLZ 8-8-6-SS	60F4533	PDFS104S42.8SS
024-77479-0	JNPMB10	60F4633	PDFS104S42.8SU
024-77482-000	JNPMB12	60F4633-SOGWO	PDFS106BNBRSS
024-77492-0	JNPMB8	60F4933	PDFS106BS
024-77518-0	JO10103	60F4933-SOG	PDFS106BSS
024-77518-000	JP02P2000NL	60F4933-SOGWO	PDFS106BSU
024-77530-009	JP04C2100N	60F6533	PDFS106GNBRSS
024-77608-0	JP04C2100NL	60F6633	PDFS106GS
024-77608-001	JP04C3100NL	60F6633-K	PDFS106GSS
024-77657-0	JP04P2151N	60F6633-WO	PDFS106GSU
024-77664-000	JPB10	60F6933	PDFS106S48.6NBRSS
024-77707-000	JPB12	60F6933-SOGWO	PDFS106S48.6S
024-77710-0	JPB14	60F9533	PDFS106S48.6SS
024-77726-000	JPB4	60F9933	PDFS106S48.6SU
024-77743-0	JPB6	60F9933-SOG	PDFS108BNBRSS
024-77743-000	JPB8	60F9933-SOGWO	PDFS108BS
024-77746-0	JPK10	60F9933-WO	PDFS108BSS
024-77747-0	JPK10-10-8	60KAAK13MPN	PDFS108BSU
024-77759-000	JPK12	60KAAK17MPN	PDFS108GNBRSS
024-77780-000	JPK12-12-10	60KAAK21MPN	PDFS108GS
024-77782-000	JPK14	60KAIW13MPN	PDFS108GSS
024-77801-000	JPK4	60KAIW17MPN	PDFS108GSU
024-77814-0	JPK6	60KAIW21MPN	PDFS108S61NBRSS
024-77814-000	JPK6-6-4	60KATF06MPN	PDFS108S61S
024-77830-000	JPK6-6-8	60KATF08MPN	PDFS108S61SS
024-77853-000	JPK8	60KATF10MPN	PDFS108S61SU
024-77855-000	JPK8-8-6	60M44B3	PDFS110BNBRSS
024-77856-000	JPMK4	60M44B3-OP	PDFS110BS
024-77885-002	JPMK6	60M45B3	PDFS110BSS
024-77892-002	JPUR12X025	60M46B3	PDFS110BSU
024-77925-000	K00-00807-8	60M46B3-KCCL60	PDFS110GNBRSS
024-77964-002	K00-00808-8	60M46B3-OP	PDFS110GS
024-77974-000	K00-00860-8	60M46B3-SOGWO	PDFS110GSS
024-77978-000	K00-01026-8	60M49B3	PDFS110GSU
024-77982-012	K00-01028-8	60M49B3-KCCL90	PDFS110S76.6NBRSS
024-90047-000	K00-01196-8	60M49B3-SOG	PDFS110S76.6S
024-90064-0	K00-01238-8	60M49B3-SOGWO	PDFS110S76.6SS
024-90092-000	K00-01425-8	60M54B3	PDFS110S76.6SU
024-90122-000	K00-01426-8	60M56B3	PDFS112BNBRSS
024-90148-000	K0147-12-10	60M56B3-OP	PDFS112BS
024-90156-502	K0147-12-12	60M59B3	PDFS112BSS
024-90161-000	K0147-12-12C	60M64B3	PDFS112BSU
024-90167-000	K0147-16-16	60M64B3	PDFS112GNBRSS
024-90167-002	K0147-16-16C	60M64B3-OP	PDFS112GS
024-90186-002	K0147-20-20C	60M64B3-SOG	PDFS112GSS
024-90365-0	K0147-2-4	60M64B3-SOGWO	PDFS112GSU
024-90392-0	K0147-4-4	60M65B3	PDFS112S90.5NBRSS
024-90434-0	K0147-4-4C	60M69B3	PDFS112S90.5S

024-90451-000	K0147-6-4	60M69B3-OP	PDFS112S90.5SS
024-90512-000	K0147-6-5	60M69B3-SOG	PDFS112S90.5SU
024-90516-503	K0147-6-6	60M69B3-SOGWO	PDFS114BNBRSS
024-90533-000	K0147-6-6C	60M94B3	PDFS114BS
024-90543-000	K0147-6-8	60M94B3-IN825	PDFS114BSS
024-90544-002	K0147-8-10	60M94B3-K	PDFS114BSU
024-90563-011	K0147-8-6	60M94B3-OP	PDFS114GNBRSS
024-90563-013	K0147-8-8	60M94B3-OPSOGWO	PDFS114GS
024-90621-000	K0147-8-8C	60M94B3-SOG	PDFS114GSS
024-90626-000	K01EX-2-025	60M94B3-SOGWO	PDFS114GSU
024-90626-002	K01LX-4-03	60M94B3-UR	PDFS114S103NBRSS
024-90645-001	K01LX-8-08	60M94B3-WO	PDFS114S103S
024-90652-000	K01NX-2-025	60M94B3-WP	PDFS114S103SS
024-90664-000	K01NX-2-04	60M96B3	PDFS114S103SU
024-90665-001	K01NX-4-025	60M96B3-OP	PDFS116BNBRSS
024-90687-000	K01NX-4-04	60M96B3-SOG	PDFS116BS
024-90687-001	K01NX-4-04C	60M96B3-SOGWO	PDFS116BSS
024-90702-000	K01NX-6-04	60M96B3-WO	PDFS116BSU
024-90729-0	K01NX-6-04SA	60M96B3-WP	PDFS116GNBRSS
024-90729-000	K01NX-6-05	60M99B3	PDFS116GS
024-90735-000	K01NX-6-06	60MAH4H4	PDFS116GSS
024-90746-000	K01NX-8-08	60MAH4H4-SOG	PDFS116GSU
024-90787-010	K01PX-2-03	60MAH4H5	PDFS116S115.5NBRSS
024-90790-010	K01PX-4-04	60MAH4H6	PDFS116S115.5S
024-90799-000	K01PX-6-04	60MAH4H6-SOG	PDFS116S115.5SS
024-90802-000	K01PX-6-05	60MAH4H9	PDFS116S115.5SU
024-90821-009	K01V4-12-12	60MAH4H9-SOG	PDFS118BS
024-90836-000	K01V4-16-16	60MAH6H6	PDFS118BSU
024-90837-000	K01V4-20-20	60MAH6H6-SOG	PDFS118GS
024-90838-000	K01V4-24-24	60MAH6H9	PDFS118GSU
024-90839-000	K01V4-32-32	60MAH6H9-SOG	PDFS118S142S
024-90839-001	K01V6-20-20	60MAH9H9	PDFS118S142SU
024-90839-500	K01V6-24-24	60MAH9H9-SOG	PDFS401B38NBRSS
024-90840-500	K01V6-32-32	60RVP-6072	PDFS401B38S
024-90845-000	K01VS-6-6	60RVP6072-CE	PDFS401B38SS
024-90847-0	K01VS-8-8	60RVP6072-SOG	PDFS401B38SU
024-90847-000	K022090	60SFAK13SXN	PDFS401BNBRSS
024-90848-000	K022090	60SFIW13SXN	PDFS401BS
024-90852-000	K022093	60SFTF06SXN	PDFS401BSS
024-90854-500	K022093	60SFTF10SXN	PDFS401BSU
024-90856-000	K022095	60TC4C	PDFS401G38NBRSS
024-90856-003	K022095	60TC6C	PDFS401G38S
024-90857-001	K022113	60TC9C	PDFS401G38SS
024-90858-000	K022113	60UF4433	PDFS401G38SU
024-90858-001	K02-27355-8	60UF4433-SOG	PDFS401GNBRSS
024-90860-001	K02A3N	60UF6633	PDFS401GS
024-90861-001	K02NX-4-04	60UF9933	PDFS401GSS
024-90863-000	K02NX-6-04	60UF9933-SOG	PDFS401GSU
024-90869-000	K032170	60UF9933-SOGWO	PDFS401S17.5NBRSS
024-90870-000	K032170	60VM4001-SOGWO	PDFS401S17.5S
024-90873-000	K0347-10-10	60VM4071	PDFS401S17.5SS
024-90879-001	K0347-10-6	60VM4071-B	PDFS401S17.5SU
024-90893-000	K0347-10-8	60VM4071-C1S	PDFS401S21.6NBRSS

024-90902-000	K0347-12-10	60VM4071-CM	PDFS401S21.6S
024-90908-009	K0347-12-12	60VM4071-O1S	PDFS401S21.6SS
024-90909-009	K0347-12-8	60VM4071-SOG	PDFS401S21.6SU
024-90919-000	K0347-14-12	60VM4071-SOGWO	PDFS402BNBRSS
024-90939-000	K0347-16-12	60VM4072	PDFS402BS
024-90948-009	K0347-16-16	60VM4073	PDFS402BSS
024-90949-000	K0347-20-16	60VM4074	PDFS402BSU
024-90956-000	K0347-4-4	60VM4075	PDFS402GNBRSS
024-91006-000	K0347-5-4	60VM4075-SOG	PDFS402GS
024-91017-500	K0347-6-4	60VM4081	PDFS402GSS
024-91021-000	K0347-6-5	60VM4082	PDFS402GSU
024-91027-0	K0347-6-6	60VM4083	PDFS402S27.2NBRSS
024-91034-000	K0347-8-5	60VM4084	PDFS402S27.2S
024-91034-002	K0347-8-6	60VM4085	PDFS402S27.2SS
024-91049-000	K0347-8-8	60VM4872	PDFS402S27.2SU
024-91049-001	K0347-8-8C	60VM4872-CSS	PDFS403BNBRSS
024-91050-000	K03PX-10-08	60VM4872-CSSPM	PDFS403BS
024-91050-002	K03PX-6-05	60VM4872-PM	PDFS403BSS
024-91055-009	K03PX-8-06	60VM4882	PDFS403BSU
024-91072-000	K03V4-12-12	60VM6071	PDFS403GNBRSS
024-91076-0	K03V4-16-12	60VM6071-C1S	PDFS403GS
024-91076-000	K03V4-16-16	60VM6071-O1S	PDFS403GSS
024-91081-028	K03V4-20-20	60VM6071-O2S	PDFS403GSU
024-91095-500	K03V4-24-20	60VM6071-OM	PDFS403S34.1NBRSS
024-91095-501	K03V4-24-24	60VM6071-SOG	PDFS403S34.1S
024-91130-000	K03V4-32-32	60VM6071-SOGWO	PDFS403S34.1SS
024-91140-003	K03V6-20-20	60VM6072	PDFS403S34.1SU
024-91159-428	K03V6-24-24	60VM6072-TG	PDFS404BNBRSS
024-91183-000	K03VS-10-8	60VM6073	PDFS404BS
024-91208-0	K03VS-6-6	60VM6074	PDFS404BSS
024-91229-501	K03VS-8-6	60VM6075	PDFS404BSU
024-91293-043	K03VS-8-8	60VM6075-GY	PDFS404GNBRSS
024-91326-000	K044200-HY1	60VM6081	PDFS404GS
024-91339-0	K04A3N	60VM6082	PDFS404GSS
024-91339-000	K04C3-10.0N	60VM6083	PDFS404GSU
024-91339-001	K04C3-15.0N	60VM6084	PDFS404S42.8NBRSS
024-91343-0	K04C3-2.5V	60VM6085	PDFS404S42.8S
024-91385-000	K04C3-5.0N	60VM6872	PDFS404S42.8SS
024-91424-000	K04F3-2.5N	60VM6882	PDFS404S42.8SU
024-91440-000	K04LLCF	60VM6882-GY	PDFS405BNBRSS
024-91479-009	K05-27355-8	60VM9001-SOGWO	PDFS405BS
024-91493-000	K06054008	60VM9071	PDFS405BSS
024-91499-0	K06054008	60VM9071-CM	PDFS405BSU
024-91499-000	K064025-GD1	60VM9071-OM	PDFS405GNBRSS
024-91499-500	K064025-KY2	60VM9071-SOG	PDFS405GS
024-91509-000	K064050-HY1	60VM9071-SOGWO	PDFS405GSS
024-91515-003	K0647-12-10	60VM9071-TGK	PDFS405GSU
024-91531-000	K0647-12-12	60VM9072	PDFS405S48.6NBRSS
024-91547-0	K0647-12-12C	60VM9072-SOG	PDFS405S48.6S
024-91551-000	K0647-12-8	60VM9072-SOGWO	PDFS405S48.6SS
024-91564-000	K0647-14-12	60VM9073	PDFS405S48.6SU
024-91585-001	K0647-16-12	60VM9074	PDFS406BNBRSS
024-91639-000	K0647-16-16	60VM9075	PDFS406BS

024-91642-009	K0647-16-16C	60VM9081	PDFS406BSS
024-91652-000	K0647-20-16	60VM9081-SOG	PDFS406BSU
024-91657-000	K0647-6-4	60VM9081-SOGWO	PDFS406GNBRSS
024-91676-000	K0647-6-5	60VM9082	PDFS406GS
024-91679-0	K0647-6-5C	60VM9082-SOGWO	PDFS406GSS
024-91694-000	K0647-6-6	60VM9083	PDFS406GSU
024-91695-000	K0647-6-6C	60VM9084	PDFS406S61NBRSS
024-91722-500	K065303553	60VM9085	PDFS406S61S
024-91743-000	K065303553	60VM9872	PDFS406S61SS
024-91748-0	K065603549	60VM9872-SRS	PDFS406S61SU
024-91776-0	K065603549	60VM9882	PDFS407BNBRSS
024-91841-001	K065603553	60VRMM4812-C4	PDFS407BS
024-91848-000	K065603553	60VRMM4882	PDFS407BSS
024-91864-0	K065A42040	60VRMM4882-C10	PDFS407GNBRSS
024-91865-0	K065A42040	60VRMM4882-C4	PDFS407GS
024-91888-000	K06EX-4-025N	60VRMM6882	PDFS407GSS
024-91889-000	K06L71	60VRMM6882-C4	PDFS407S76.6NBRSS
024-91910-0	K06L71X	6-1 AW2-SS	PDFS407S76.6S
024-91924-0	K06LCF	6-1 HBZ-SS	PDFS407S76.6SS
024-91924-000	K06LCFX	6-1 Z2HLZ-1-SS	PDFS408BNBRSS
024-91942-003	K06LLCF	6-1 Z2HLZ-2-SS	PDFS408BS
024-91942-031	K06LLCFX	6-1 Z2HLZ-3-SS	PDFS408BSS
024-91975-000	K06LMS	6-1 Z2HLZ-4-SS	PDFS408GNBRSS
024-91987-000	K06NX-10-08	6-1 Z2HLZ7-1-SS	PDFS408GS
024-91987-003	K06NX-12-12	6-1 Z2HLZ7-2-SS	PDFS408GSS
024-91994-000	K06NX-5-04	6-1 Z2HLZ7-3-SS	PDFS408S90.5NBRSS
024-92004-0	K06NX-6-04	6-1 Z2HLZ7-4-SS	PDFS408S90.5S
024-92021-002	K06NX-6-05N	6-1 Z2HLZ7-SS	PDFS408S90.5SS
024-92032-000	K06NX-6-06	6-1 Z3HLZ7-SS	PDG-4-CRE
024-92032-003	K06NX-8-08	6-1 ZHLZ7-SS	PDG-4-CRE
024-92100-002	K06PX-10-08	6-1 ZHLZ-SS	PDH-2
024-92103-000	K06PX-4-03	6-1/2 AW2-SS	PDP-4
024-92103-001	K06PX-4-03N	6-1/2 AW-SS	PDP-6
024-92103-500	K06PX-4-04	6-1/2 ZHBW2-SS	PDP-8
024-92167-000	K06PX-5-04	6-1/2 ZHLW2-SS	PDSA4025
024-92200-002	K06PX-5-04N	6-1/4 AOEG-S	PDSF10/L/17.5BS
024-92224-001	K06PX-5-04NC2	6-1/4 F5OF-S	PDSF10/S/17.5BS
024-92231-502	K06PX-6-04	6-1/4 F5OG-S	PDSF13/L/21.6BS
024-92232-502	K06PX-6-05	6-1/4 F5OG-SS	PDSF13/S/21.6BS
024-92248-0	K06PX-6-05N	6-1/4 ZEBW2-SS	PDSF19/L/27.2BS
024-92249-000	K06PX-6-06	6-1/4 ZELW2-SS	PDSF19/S/27.2BS
024-92256-000	K06PX-8-06	6-1/4 ZHBW2-SS	PDSF25/L/34.5BS
024-92265-000	K06PX-8-08	6-1/4 ZHLW2-SS	PDSF25/S/34.5BS
024-92276-000	K06S71	6-1/8 F5OG-S	PDSF32/L/43BS
024-92279-0	K06S71X	6-10 C5OLO-S	PDSF32/S/43BS
024-92279-000	K06SCF	6-10 C5OX-S	PDSF32/S/43BSS
024-92280-000	K06SCFX	6-10 F5OLO-S	PDSF38/L/48.6BS
024-92287-000	K06V4-12-12	6-10 F5OX-S	PDSF38/S/48.6BS
024-92287-001	K06V4-12-12C	6100-63-00200-0000-000000	PDSF38/S/48.6BSS
024-92287-002	K06V4-16-12	6100-63-00200-0000-000000	PDSF51/L/61BS
024-92287-5	K06V4-16-16	6100-63-00400-0000-000000	PDSF51/S/61BS
024-92298-000	K06V4-20-16	6100-63-00400-0000-000000	PDSF56/L/76.6BS
024-92300-001	K06V4-20-20	6100-63-00400-0010-000000	PDSF56/S/76.6BS

024-92335-000	K06V4-24-20	6100-63-00400-0010-000000	PDSF63/L/89BS
024-92369-0	K06V4-24-24	6100-63-00700-0000-000000	PDSF63/S/89BS
024-92404-000	K06V4-32-32	6100-63-00700-0000-000000	PDSF70/S/102BS
024-92408-000	K06V6-20-20	6100-63-00800-0000-000000	PDSF80/L/114BS
024-92430-000	K06V6-24-20	6100-63-00800-0000-000000	PDSF80/S/114BS
024-92447-000	K06V6-24-24	6100-63-01050-0000-000000	PDX13
024-92449-000	K06V6-32-32	6100-63-01050-0000-000000	PE1093-1
024-92532-000	K06VS-6-6	6100-63-01200-0000-000000	PE1093-3
024-92557-000	K06ZLCF	6100-63-01200-0000-000000	PE1093-8
024-92592-503	K06ZSCF	6100-63-01400-0000-000000	PE1093-9
024-92597-000	K07NX-12-12	6100-63-01400-0000-000000	PE10M10W1PN9KW
024-92607-000	K07NX-4-04	6100-63-01500-3000-000000	PE10M21W1PN9KW
024-92656-500	K07NX-4-04N	6100-63-01500-3000-000000	PE10M35W1PN9KW
024-92675-000	K07NX-6-06	6100-63-01650-0000-000000	PE10M35W1PV9KW
024-92690-000	K07NX-6-06N	6100-63-01650-0000-000000	PE1363-1-TYPE1
024-92695-000	K07PX-4-02N	6100-63-03700-0001-0100B3	PE1369-1
024-92721-001	K07PX-4-04	6100-63-03700-0001-0100B3	PE2-016-10M040/063/09/20
024-92741-000	K07PX-4-04N	6101 04 60	PE25M10W1PN9KW
024-92741-010	K07PX-4-04NC2	6101 06 60	PE25M21W1PN9KW
024-92747-000	K07PX-4-04S2	6101 06 65	PE25M35W1PN9KW
024-92750-000	K07PX-6-06	6104 04 00	PE3-003-10M060/075/11/23
024-92752-000	K07PX-6-06N	6104 06 00	PE3-003-10M073/098/09/32
024-92753-000	K07PX-6-06NC2	6104 08 00	PE3-004-10M040/063/09/20
024-92767-015	K07PX-8-08	6105 04 10	PE3-005-10M040/063/09/20
024-92789-0	K07PX-8-08NC2	6105 04 13	PE3-005-10M040/063/09/20A
024-92811-000	K089200-HY1	6105 04 52	PE3-008-10M038/066/06/21
024-92812-000	K08L71	6105 04 56	PE3-008-10M040/063/09/20
024-92829-502	K08L71X	6105 04 57	PE3-008-10M060/075/11/23
024-92842-003	K08LCF	6105 04 60	PE3-012-10M040/063/09/20
024-92868-0	K08LCFX	6105 06 10	PE3-015-10M060/075/11/23
024-92892-001	K08LLCF	6105 06 13	PE3-020-10M040/063/09/20
024-92896-0	K08LLCFX	6105 06 60	PE3-025-10M040/063/09/20
024-92899-000	K08LMS	6105 06 71	PE3-040-10M040/063/09/20
024-92919-000	K08S71	6105 08 65	PE3-040-10M060/075/11/23
024-92922-0	K08S71X	6105 10 71	PE3-064-10M040/063/09/20
024-92933-000	K08SCF	6106 04 00	PE4-003-10M080/100/14/30
024-92942-000	K08SCFX	6106 06 00	PE4-004-10M080/100/14/30
024-92943-0	K08SMS	6106 08 00	PE4-005-10M080/100/14/30
024-92992-000	K08ZLCF	6-10F5OMLOS	PE4-005-10M080/100/19/40
024-92996-0	K08ZS71	6-10F5OMXS	PE4-005-10M095/115/14/30
024-93005-0	K08ZSCF	6-10F5OMXSS	PE4-005-10M095/115/19/40
024-93024-000	K0C47-10-4	6-10L LOHU86-S	PE4-007-10M080/100/19/40
024-93026-000	K0C47-10-5	6-10LXHMU86OSSV	PE4-008-10M050/095/14/30
024-93029-000	K0C47-10-6	6-10MMLOHB3S	PE4-008-10M060/075/11/23
024-93043-000	K0C47-12-5	6-10S LOHU86-S	PE4-008-10M080/100/14/30
024-93043-500	K0C47-12-5C	611011A	PE4-008-10M080/100/19/40
024-93044-000	K0C47-12-6	611050G	PE4-008-10M095/115/19/40
024-93044-001	K0C47-12-6C	611050HV	PE4-015-10M080/100/14/30
024-93044-500	K0C47-14-6	611-10	PE4-015-10M080/100/19/40
024-93090-000	K0C47-16-8	611-12	PE4-020-10M060/075/11/23
024-93105-000	K0C47-16-8C	611-4	PE4-020-10M080/100/14/30
024-93111-000	K0C47-20-10	6114 04 56	PE4-025-10M080/100/14/30
024-93130-000	K0C47-20-12	6114 06 56	PE4-032-10M080/100/14/30

024-93146-002	K0C47-25-12	611-6	PE4-040-10M060/075/11/23
024-93155-003	K0C47-30-16	611-8	PE4-040-10M080/100/14/30
024-93162-000	K0C47-6-4	611HT-10	PE5-003-10M095/115/19/40
024-93162-001	K0C47-8-4	611HT-12	PE5-004-10M095/115/19/40
024-93162-400	K0C47-8-4C	611HT-4	PE5-005-10M095/115/19/40
024-93209-000	K0CNX-14-06	611HT-6	PE5-005-10M110/130/24/50
024-93237-000	K0CNX-16-08	611HT-8	PE5-008-10M095/115/19/40
024-93242-0	K0CNX-16-08-6V	6-12 F5OX-S	PE5-008-10M110/130/14/30
024-93267-000	K0CNX-20-10	6-12 FBZ-SS	PE5-008-10M110/130/24/50
024-93277-0	K0CNX-30-16-6V	6-12 ZHLS-SS	PE5-015-10M095/115/19/40
024-93277-000	K0CPX-16-08	6120R10	PE5-040-10M095/115/19/40
024-93277-001	K0CV4-20-10	6120R10MTC	PE5-060-10M095/115/19/40
024-93294-5	K0CV4-20-12	6120R2410MTC	PEC5-110V-D
024-93312-000	K0CV4-25-12	6120R2430	PEC5-110V-D
024-93339-0	K0CV4-25-16	6120R2430MTC	PEC5-220V
024-93407-003	K0CV4-30-16	6120R30	PEC5-220V
024-93436-0	K0CV4-30-20	6120R30MTC	PEC5-24V-D
024-93462-009	K0CV4-38-20	6125Z	PEC5-24V-D
024-93466-000	K0CV4-38-24	6-12C5OMLOS	PED20010C
024-93484-0	K0CV6-30-20	6-12F42EDMLOS	PED20010C
024-93501-000	K0CV6-38-20	6-12F42EDMXS	PEFF310GS
024-93557-000	K0CV6-38-20C	6-12F42EDMXSS	PEFF310GSM
024-93632-000	K0CV6-38-24	6-12F4OMXS	PEFF310GSU
024-93652-0	K0CVS-10-4	612KFTF13MVN	PEFF310NS
024-93652-040	K0CVS-12-6	612KFTF16MVN	PEFF310NSM
024-93669-042	K0CVS-14-6	612KFTH13MVN	PEFF310NSU
024-93694-000	K0CVS-16-8	612KFTR13MVN	PEFF32GNBRSSM
024-93694-500	K0CVS-8-4	612SFAW17MXN	PEFF32GS
024-93778-000	K10L71	612SFAW21MXN	PEFF32GSM
024-93791-501	K10L71X	612SFAW26MXN	PEFF32GSS
024-93804-000	K10LCF	612SFIW17MXN	PEFF32GSSM
024-93818-016	K10LCFX	612SFIW21MXN	PEFF32GSU
024-93836-000	K10LMS	6138U	PEFF32NNBRSSM
024-93851-000	K10S71	61590607A720A	PEFF32NS
024-93865-002	K10S71X	61590607A720A	PEFF32NSM
024-93875-019	K10SCF	6-16 ZHLS-SS	PEFF32NSS
024-93895-003	K10SCFX	6160R30MTC	PEFF32NSSM
024-93916-0	K10ZL71	6179 04 10	PEFF32NSU
024-93916-000	K10ZLCF	6179 04 13	PEFF33GNBRSSM
024-93916-500	K10ZSCF	6179 04 52	PEFF33GS
024-93936-000	K12L71	6179 04 56	PEFF33GSM
024-93996-000	K12L71X	6179 04 57	PEFF33GSS
024-94005-017	K12LCF	6179 04 60	PEFF33GSSM
024-94005-020	K12LCFX	6179 06 10	PEFF33GSU
024-94009-002	K12LDPR71CF	6179 06 13	PEFF33NNBRSSM
024-94022-000	K12S71	6179 06 60	PEFF33NS
024-94109-000	K12S71X	6179 06 65	PEFF33NSM
024-94130-041	K12SCF	6179 08 65	PEFF33NSS
024-94132-032	K12SCFX	618-00004-8	PEFF33NSSM
024-94137-0	K12ZL71	618-00010-3	PEFF33NSU
024-94137-002	K12ZLCF	618-00011-3	PEFF34GNBRSSM
024-94137-003	K12ZS71	618-00012-3	PEFF34GS
024-94151-000	K12ZSCF	618-10227-8	PEFF34GSM

024-94195-003	K135504549	619FIL	PEFF34GSS
024-94223-000	K135504549	619FIL	PEFF34GSSM
024-94229-0	K135604549	61AC-2	PEFF34GSU
024-94229-000	K135604549	61ACX-2	PEFF34NNBRSSM
024-94230-0	K135604553	61AD	PEFF34NS
024-94232-0	K135604553	61ADX	PEFF34NSM
024-94269-000	K14S71	61KAAK21MPN	PEFF34NSS
024-94279-0	K14SCF	61KAIW17MPN	PEFF34NSSM
024-94279-000	K14SCFX	61KATF10MPN	PEFF34NSU
024-94279-500	K1547-12-10	61-P-1	PEFF35GNBRSSM
024-94280-0	K1547-12-12	6-2 CBZ-B	PEFF35GS
024-94281-0	K1547-12-8	6-2 CBZ-SS	PEFF35GSM
024-94281-000	K1547-16-12	6-2 CTX-S	PEFF35GSS
024-94282-000	K1547-16-16	6-2 DBZ-SS	PEFF35GSSM
024-94282-500	K1547-16-16C	6-2 DTX-S	PEFF35GSU
024-94283-000	K1547-20-16	6-2 FBU-S	PEFF35NNBRSSM
024-94283-500	K1547-24-16	6-2 FBZ-SS	PEFF35NS
024-94284-000	K1547-8-8	6-2 FTX-S	PEFF35NSM
024-94284-500	K15L71	6-2 GBZ-B	PEFF35NSS
024-94285-0	K15L71X	6-2 GBZ-SS	PEFF35NSSM
024-94285-000	K15LCF	6-2 HBZ-SS	PEFF35NSU
024-94286-000	K15LCFX	6-2 MHN-SS	PEFF36GNBRSSM
024-94286-5	K15V4-12-12	6-2 MHN-SSHP	PEFF36GS
024-94287-001	K15V4-16-12	6-2 RA-SS	PEFF36GSM
024-94287-5	K15V4-16-16	6-2 RA-SSHP	PEFF36GSS
024-94288-500	K15V4-16-20	6-2 RB-B	PEFF36GSSM
024-94289-500	K15V6-16-20	6-2 RB-S	PEFF36GSU
024-94290-5	K15VS-12-8	6-2 RB-SS	PEFF36NNBRSSM
024-94291-500	K15VS-8-8	6-2 T2HF-SS	PEFF36NS
024-94294-001	K15ZL71	6-2 T2HG-SS	PEFF36NSM
024-94296-001	K15ZLCF	6-2 TRBZ-SS	PEFF36NSS
024-94316-000	K16S71	6-2 VBZ-SS	PEFF36NSSM
024-94345-000	K16S71X	6-2 VTX-S	PEFF36NSU
024-94346-000	K16SCF	620-00001-3	PEFF38GNBRSSM
024-94347-000	K16SCFX	620-00003-3	PEFF38GS
024-94353-0	K16SMS	620-00004-3	PEFF38GSM
024-94353-000	K16ZS71	620-00016-3	PEFF38GSS
024-94363-000	K16ZSCF	620-00022-3	PEFF38GSSM
024-94384-000	K1747-12-10	6200-63-00300-0000-000000	PEFF38GSU
024-94400-000	K1747-12-12	6200-63-00300-0000-000000	PEFF38GVITSM
024-94484-000	K1747-16-12	6200-63-00320-0000-000000	PEFF38NNBRSSM
024-94484-002	K1747-16-16	6200-63-00320-0000-000000	PEFF38NS
024-94489-003	K1747-20-16	6200-63-00500-0000-000000	PEFF38NSM
024-94498-000	K1747-8-8	6200-63-00500-0000-000000	PEFF38NSS
024-94499-000	K175303553	6200-63-00600-0000-000000	PEFF38NSSM
024-94525-000	K175303553	6200-63-00600-0000-000000	PEFF38NSU
024-94537-0	K175903553	6200-63-00620-0000-000000	PEFF62GNBRSSM
024-94537-500	K175903553	6200-63-00620-0000-000000	PEFF62GS
024-94578-003	K17V4-12-12	6200-63-00700-0000-000000	PEFF62GSM
024-94637-000	K17V4-16-12	6200-63-00700-0000-000000	PEFF62GSS
024-94641-001	K17V4-16-16	6200-63-00850-0000-000000	PEFF62GSSM
024-94642-001	K17V4-16-20	6200-63-00850-0000-000000	PEFF62GSU
024-94658-000	K17V6-16-20	6200-63-00880-0000-000000	PEFF62NNBRSSM

024-94676-0	K17VS-12-8	6200-63-00880-0000-000000	PEFF62NS
024-94676-001	K183001	6200-63-00900-0000-000000	PEFF62NSM
024-94680-004	K183001	6200-63-00900-0000-000000	PEFF62NSS
024-94687-0	K183038	6200-63-01000-0000-000000	PEFF62NSSM
024-94687-004	K183038	6200-63-01000-0000-000000	PEFF62NSU
024-94693-0	K183077	6200-63-01020-0000-000000	PEFF63GNBRSSM
024-94693-002	K183077	6200-63-01020-0000-000000	PEFF63GS
024-94693-004	K18L71	6200-63-01100-0000-000000	PEFF63GSM
024-94700-0	K18L71X	6200-63-01100-0000-000000	PEFF63GSS
024-94700-001	K18LCF	6200-63-01200-0000-000000	PEFF63GSSM
024-94700-002	K18LCFX	6200-63-01200-0000-000000	PEFF63GSU
024-94700-004	K18ZL71	6200-63-01200-0000-010000	PEFF63NNBRSSM
024-94702-002	K18ZLCF	6200-63-01200-0000-010000	PEFF63NS
024-94702-502	K1947-12-10	6200-63-01250-0000-000000	PEFF63NSM
024-94713-0	K1947-12-12	6200-63-01250-0000-000000	PEFF63NSS
024-94713-002	K1947-12-12C	6200-63-01400-0000-000000	PEFF63NSSM
024-94715-000	K1947-12-16	6200-63-01400-0000-000000	PEFF63NSU
024-94717-004	K1947-12-8	6200-63-01400-B000-000000	PEFF64GNBRSSM
024-94718-004	K1947-16-12	6200-63-01400-B000-000000	PEFF64GS
024-94725-000	K1947-16-16	6200-63-01420-7000-000000	PEFF64GSM
024-94735-000	K1947-16-16C	6200-63-01420-7000-000000	PEFF64GSS
024-94742-000	K1947-20-16	6200-63-01420-B000-000000	PEFF64GSSM
024-94793-000	K1947-8-8	6200-63-01420-B000-000000	PEFF64GSU
024-94798-002	K19V4-12-12	6200-63-01500-0000-000000	PEFF64NNBRSSM
024-94839-016	K19V4-16-12	6200-63-01500-0000-000000	PEFF64NS
024-94858-000	K19V4-16-16	6200-63-01700-0000-000000	PEFF64NSM
024-94872-004	K19V4-16-20	6200-63-01700-0000-000000	PEFF64NSS
024-94886-501	K19V6-16-20	6200-63-01700-3000-000000	PEFF64NSSM
024-94890-0	K19VS-12-8	6200-63-01700-3000-000000	PEFF64NSU
024-94890-000	K19VS-8-8	6200-63-01800-0000-000000	PEFF65GNBRSSM
024-94944-000	K1A060N	6200-63-01800-0000-000000	PEFF65GS
024-94945-003	K1C47-10-4	6200-63-02000-0000-000000	PEFF65GSM
024-94946-501	K1C47-10-4C	6200-63-02000-0000-000000	PEFF65GSS
024-94969-000	K1C47-10-5	6200-63-02500-0000-000000	PEFF65GSSM
024-94981-000	K1C47-10-6	6200-63-02500-0000-000000	PEFF65GSU
024-94995-038	K1C47-12-4	6200-63-02600-0000-000000	PEFF65NNBRSSM
025-RAC-01	K1C47-12-5	6200-63-02600-0000-000000	PEFF65NS
025-RAC-02	K1C47-12-5C	6200-63-03000-0000-000000	PEFF65NSM
026-05038-0	K1C47-12-6	6200-63-03000-0000-000000	PEFF65NSS
02611099-21	K1C47-12-6C	6200-63-03000-3000-000000	PEFF65NSSM
026-20034-0	K1C47-14-6	6200-63-03000-3000-000000	PEFF65NSU
026-20072-0	K1C47-14-6C	6200-63-04000-0000-000000	PEFF66GNBRSSM
026-20087-0	K1C47-14-8	6200-63-04000-0000-000000	PEFF66GS
026-20090-0	K1C47-16-10	620-30279-0	PEFF66GSM
026-20101-0	K1C47-16-8	620-82012-0	PEFF66GSS
026-20135-0	K1C47-16-8C	620-82046-0	PEFF66GSSM
026-20145-0	K1C47-20-10	620-82046-5	PEFF66GSU
026-20146-0	K1C47-20-10C	620-82062-0	PEFF66NNBRSSM
026-20165-0	K1C47-20-12	620-82062-5	PEFF66NS
026-20170-0	K1C47-20-12C	620-82064-0	PEFF66NSM
026-20196-0	K1C47-20-8	620-82066-0	PEFF66NSS
026-20197-0	K1C47-25-10	620-82068-0	PEFF66NSSM
026-20217-0	K1C47-25-12	620-82069-0	PEFF66NSU

026-20218-0	K1C47-25-12C	620-82072-0	PEFF68GNBRSSM
026-20218-5	K1C47-25-16	620-82106-0	PEFF68GS
026-20227-0	K1C47-25-16C	620-82106-5	PEFF68GSM
026-20250-0	K1C47-30-16	622-10004-0	PEFF68GSS
026-20254-0	K1C47-30-16C	623-12559-0	PEFF68GSSM
026-20256-0	K1C47-6-4	623-14213-0	PEFF68GSU
026-20276-0	K1C47-8-4	62331S	PEFF68NNBRSSM
026-20277-0	K1C47-8-4C	62331S	PEFF68NS
026-20282-0	K1CNX-10-04	6-24 ZHLS-SS	PEFF68NSM
026-20294-0	K1CNX-12-05	627FIL	PEFF68NSS
026-20299-0	K1CNX-16-08	627FIL	PEFF68NSSM
026-20300-0	K1CNX-16-08-6V	6-2829S	PEFF68NSU
026-20305-0	K1CNX-20-10	628FIL	PEG-10-SIE
026-20314-0	K1CNX-20-10-6V	628FIL	PEG-10-SIE
026-20315-0	K1CPX-10-04	62AC-3	PEG-12-NBR
026-20324-0	K1CPX-12-05	62AD	PEG-12-NBR
026-20353-0	K1CPX-16-08	6-2C4OMLOS	PEG-12-SI
026-20393-5	K1CPX-6-04	6-2C4OMXS	PEG-12-SI
026-20396-0	K1CPX-8-04	6-2C4OMXSS	PEG-15X45-U
026-20496-0	K1CV4-20-10	6-2CMLS/CAP	PEG-15X45-U
026-20497-0	K1CV4-20-12	6-2CMTXSS	PEG-30X50-NBR
026-20565-5	K1CV4-20-12C	6-2F42EDMLOS	PEG-30X50-NBR
026-20582-0	K1CV4-25-12	6-2F42EDMLOSS	PEG-30X50-SI
026-20593-0	K1CV4-25-12C	6-2F42EDMXS	PEG-30X50-SI
026-20612-0	K1CV4-25-16	6-2F42EDMXSS	PEG-35-NBR
026-20616-0	K1CV4-30-16	6-2F4OMXS	PEG-35-NBR
026-20626-0	K1CV4-30-16C	6-2FMLOS	PEG-35-SI
026-20638-0	K1CV4-30-20	6-2FMTXSS	PEG-35-SI
026-20675-0	K1CV4-38-20	6-2RB-6MO	PEJ01-03-70
026-20676-0	K1CV4-38-20C	6-3/4 AW2-SS	PEJ01-03-70
026-20679-0	K1CV4-38-24	6-3/4 AW-SS	PEJ01-03-80
026-20802-0	K1CV6-30-20	6-3/4 ZHBW2-SS	PEJ01-03-80
026-20802-5	K1CV6-38-20	6-3/4 ZHLW2-SS	PES5
026-20840-0	K1CV6-38-20C	6-3/8 F5OG-S	PES5
026-20851-0	K1CV6-38-24	6-3/8 ZHBW2-SS	PES-A10
026-20852-0	K1CVS-12-6	6-3/8 ZHLW2-SS	PES-A10
026-20863-0	K1CVS-16-8	6-3/8F5OHG4S	PES-A2001F
026-20866-0	K1DEX-4-012	6300 00 00 05	PES-A2001F
026-20900-0	K1DEX-4-025	6300 04 00	PES-A2020B
026-20901-0	K1DEX-6-025	6300 06 00	PES-A2020B
026-20902-0	K1DNX-10-05	6300 08 00	PES-A2220B
026-20984-5	K1DNX-12-06	6300 10 00	PES-A2220B
026-20987-0	K1DNX-15-08	6300 12 00	PES-B10
026-21633-0	K1DNX-18-10	6300 56 00	PES-B10
026-21706-5	K1DNX-8-04	6300 60 00	PES-B10B
026-21851-0	K1DNX-8-04C	6300 62 00	PES-B10B
026-21865-0	K1DPX-10-05	6300-63-00800-0000-000000	PES-B11M
026-21933-0	K1DPX-12-06	6300-63-00800-0000-000000	PES-B11M
026-22564-0	K1DPX-15-08	6300-63-02000-0000-000000	PES-C10
026-22565-0	K1DPX-18-10	6300-63-02000-0000-000000	PES-C10
026-22576-0	K1DPX-28-16	6300-63-02310-0000-000000	PES-C101
026-22578-0	K1DPX-4-03	6300-63-02310-0000-000000	PES-C101
026-22609-0	K1DPX-6-03	6300-63-04202-1000-000000	PES-C10B4

026-22656-0	K1DPX-6-03C2	6300-63-04202-1000-000000	PES-C10B4
026-22679-0	K1DPX-6-04	6302 04 00WP2	PES-C10B5
026-22713-0	K1DPX-8-04	6302 04 00WP3	PES-C10B5
026-22742-0	K1DPX-8-04C	6302 04 06WP2	PES-C11F4
026-22799-0	K1DPX-8-05	6302 04 06WP3	PES-C11F4
026-22842-0	K202001	6302 06 00WP2	PES-C12
026-22872-0	K202001	6302 06 00WP3	PES-C12
026-22872-5	K20S71	6302 06 08WP2	PES-C2020B
026-22893-0	K20S71X	6302 06 08WP3	PES-C2020B
026-22896-0	K20SCF	6302 08 00WP2	PES-C20B3
026-22897-0	K20SCFX	6302 08 00WP3	PES-C20B3
026-22898-0	K20ZSCF	6302 08 10WP2	PES-C2220B
026-22930-0	K22L71	6302 08 10WP3	PES-C2220B
026-22978-0	K22L71X	6302 08 60WP2	PES-D10
026-23728-0	K22LCF	6302 08 60WP3	PES-D10
026-23742-0	K22LCFX	6302 10 00WP2	PES-D100
026-23757-0	K22ZL71	6302 10 00WP3	PES-D100
026-23876-0	K22ZLCF	6302 10 12WP2	PES-D101
026-23877-0	K22ZLVITCF	6302 10 12WP3	PES-D101
026-23929-0	K25S71	6302 12 00WP2	PF025HM001
026-23949-0	K25S71X	6302 12 00WP3	PF032HM001
026-23992-0	K25SCF	6302 56 00WP2	PF032HM005
026-24112-0	K25SCFX	6302 56 00WP3	PF040HM001
026-24125-0	K25SMS	6302 56 08WP2	PF040HM005
026-24346-0	K25ZS71	6302 56 08WP3	PF050HM001
026-24644-0	K25ZSCF	6302 56 60WP2	PF063HM001
026-24661-0	K28L71	6302 56 60WP3	PF063HM005
026-24807-0	K28L71X	6302 60 00WP2	PF080HM001
026-27026-0	K28LCF	6302 60 00WP3	PF080HM005
026-27026-5	K28LCFX	6302 60 62WP3	PF100HM001
026-27116-0	K28ZLCF	6302 62 00WP2	PF100HM005
026-27151-0	K28ZLVITCF	6302 62 00WP3	PF10G04DGSS
026-27163-0	K2A005N	6303 06 10WP2	PF10G04DGSS
026-27183-0	K2A060N	6303 06 10WP3	PF10G04DJRSS
026-27185-0	K30S71	6303 06 13WP2	PF10G04DJRSS
026-27209-0	K30S71X	6303 06 13WP3	PF10G04DJSS
026-27219-0	K30SCF	6303 06 17WP2	PF10G04DJSS
026-27410-0	K30SCFX	6303 06 17WP3	PF11G04DJRSS
026-27527-5	K313028	6303 08 10WP2	PF11G04DJRSS
026-27606-0	K313028	6303 08 10WP3	PF11G04DJSS
026-27625-0	K313029	6303 08 13WP2	PF11G04DJSS
026-27629-0	K313029	6303 08 13WP3	PF125HM001
026-27642-0	K352031	6303 08 17WP2	PF160HM001
026-27837-0	K352031	6303 08 17WP3	PF1CFM
026-27845-0	K352064	6303 10 13WP2	PF200HM001
026-27892-0	K352064	6303 10 13WP3	PF2063MMA05
026-27946-0	K352071	6303 10 17WP2	PF2140MMA01
026-27958-0	K352071	6303 10 17WP3	PF2CFM
026-28235-0	K352074	6303 10 21WP2	PF3.5CFM
026-28407-0	K352074	6303 10 21WP3	PF3BCFM
026-28663-H	K352076	6303 12 17WP2	PF3CFM
026-28719-0	K352076	6303 12 17WP3	PF4CFM
026-28754-0	K352077	6303 12 21WP2	PF501G02DHSS

026-28768-0	K352077	6303 12 21WP3	PF501G02DHSS
026-29577-0	K352082	6303 56 10WP2	PF504G02DGRSS
026-30135-0	K352082	6303 56 10WP3	PF504G02DGRSS
026-30150-0	K352094	6303 56 11WP2	PF504G02DHSS
026-30179-0	K352094	6303 56 11WP3	PF504G02DHSS
026-30191-5	K352124	6303 56 13WP2	PFB1SM
026-30324-5	K352124	6303 56 13WP3	PFB2SM
026-30483-P	K352126	6303 56 14WP2	PFB3.5SM
026-30484-P	K352126	6303 56 14WP3	PFB3SM
026-30488-P	K352128	6303 56 17WP2	PFE-1001-P
026-30489-0	K352128	6303 56 17WP3	PFE1CFM
026-30489-5	K352150	6303 56 18WP2	PFE-251-P
026-30490-H	K352150	6303 56 18WP3	PFE2CFM
026-30501-H	K352151	6303 60 13WP2	PFE3.5CFM
026-30503-0	K352151	6303 60 13WP3	PFE-371-P
026-30514-H	K352152	6303 60 14WP2	PFE-371-P-BULK
026-30527-H	K352152	6303 60 14WP3	PFE-371-PRD-BULK
026-30535-0	K352153	6303 60 17WP2	PFE3CFM
026-30556-H	K352153	6303 60 17WP3	PFE-501-P
026-30557-H	K352166	6303 60 18WP2	PFE-621-P
026-30563-0	K352166	6303 60 18WP3	PFE-751-P
026-30565-0	K352366	6303 62 17WP2	PFF296
026-30565-5	K352366	6303 62 17WP3	PFF297
026-30573-0	K35L71	6303 62 18WP2	PFF310G2SM
026-30575-T	K35L71X	6303 62 18WP3	PFF310GCF
026-30576-T	K35LCF	6303 62 21WP2	PFF310GNBRSSM
026-30589-W	K35LCFX	6303 62 21WP3	PFF310GS
026-30602-H	K35ZLCF	6303 62 22WP2	PFF310GSM
026-30633-H	K36-00163-0	6303 62 22WP3	PFF310GSS
026-30662-P	K3747-12-10	6304 04 00WP2	PFF310GSSM
026-30663-0	K3747-12-12	6304 04 00WP3	PFF310GSU
026-30670-P	K3747-14-12	6304 06 00WP2	PFF310GVITSM
026-30677-P	K3747-16-12	6304 06 00WP3	PFF310NNBRSSM
026-30683-P	K3747-16-16	6304 08 00WP2	PFF310NS
026-30686-H	K3747-6-4	6304 08 00WP3	PFF310NSM
026-30707-H	K3747-6-5	6304 10 00WP2	PFF310NSS
026-30732-P	K3747-6-6	6304 10 00WP3	PFF310NSSM
026-30739-H	K37PX-10-08	6304 12 00WP2	PFF310NSU
026-30747-H	K37V4-12-12	6304 12 00WP3	PFF312G212SM
026-30754-G	K37V4-16-16	6304 56 00WP2	PFF312GNBRSSM
026-30764-G	K37V4-20-20	6304 56 00WP3	PFF312GS
026-30765-G	K37V4-24-24	6304 60 00WP2	PFF312GSM
026-30808-H	K37V4-32-32	6304 60 00WP3	PFF312GSS
026-30810-H	K37V6-20-20	6304 60 56WP2	PFF312GSSM
026-30811-H	K37V6-24-24	6304 60 56WP3	PFF312GSU
026-30847-G	K37V6-32-32	6304 62 00WP2	PFF312NNBRSSM
026-30864-G	K37VS-6-6	6304 62 00WP3	PFF312NS
026-30864-H	K38S71	6304 62 60WP2	PFF312NSM
026-30883-0	K38S71X	6304 62 60WP3	PFF312NSS
026-30888-H	K38SCF	6305 04 10WP2	PFF312NSSM
026-30890-G	K38SCFX	6305 04 10WP3	PFF312NSU
026-30990-H	K38ZSCF	6305 04 13WP2	PFF314GNBRSSM
026-30996-H	K3947-12-10	6305 04 13WP3	PFF314GS

026-34362-0	K3947-12-12	6305 06 10WP2	PFF314GSM
026-34414-7	K3947-12-12C	6305 06 10WP3	PFF314GSS
026-34414-B	K3947-12-8	6305 06 13WP2	PFF314GSSM
026-34414-C	K3947-16-12	6305 06 13WP3	PFF314GSU
026-34414-P	K3947-16-16	6305 08 10WP2	PFF314NNBRSSM
026-34414-S	K3947-16-16C	6305 08 10WP3	PFF314NS
026-34414-V	K3947-6-4	6305 08 13WP2	PFF314NSM
026-34414-W	K3947-6-5	6305 08 13WP3	PFF314NSS
026-34414-X	K3947-6-6	6305 08 17WP2	PFF314NSSM
026-34421-7	K3947-6-6C	6305 08 17WP3	PFF314NSU
026-34421-B	K39PX-10-08	6305 10 13WP2	PFF316GNBRSSM
026-34421-C	K39PX-5-04	6305 10 13WP3	PFF316GS
026-34421-P	K39PX-6-05	6305 10 17WP2	PFF316GSM
026-34421-S	K39PX-8-08	6305 10 17WP3	PFF316GSS
026-34421-V	K39V4-12-12	6305 10 21WP2	PFF316GSSM
026-34421-W	K39V4-16-12	6305 10 21WP3	PFF316GSU
026-34421-X	K39V4-16-16	6305 12 17WP2	PFF316GVITSM
026-34458-P	K39V4-20-16	6305 12 17WP3	PFF316NNBRSSM
026-34783-0	K39V4-20-20	6305 12 21WP2	PFF316NS
026-34857-0	K39V4-24-20	6305 12 21WP3	PFF316NSM
026-34936-H	K39V4-24-24	6305 56 10WP2	PFF316NSS
026-35050-B	K39V4-32-32	6305 56 10WP3	PFF316NSSM
026-35050-C	K39V6-20-20	6305 56 11WP2	PFF316NSU
026-35050-P	K39V6-24-24	6305 56 11WP3	PFF32/12SCF
026-35050-S	K39V6-32-32	6305 56 13WP2	PFF32/12SCFM
026-35050-V	K39VS-6-6	6305 56 13WP3	PFF32/12SOMDCFM
026-35050-W	K3A060-2.5N	6305 56 14WP2	PFF32/12SOMDCFU
026-35050-X	K3A125-1.0N	6305 56 14WP3	PFF32/12ZSCFM
026-35051-B	K3A125-9.0N	6305 56 18WP2	PFF32/15LCF
026-35051-C	K3BNX-4-025	6305 56 18WP3	PFF32/15LCFM
026-35051-P	K3BNX-4-04	6305 60 11WP2	PFF32/15LOMDCFM
026-35051-S	K3BPX-4-04	6305 60 11WP3	PFF32/15LOMDCFU
026-35051-V	K3BPX-8-04S	6305 60 13WP2	PFF32/15L-SS
026-35051-W	K3DEX-6-012	6305 60 13WP3	PFF32/15ZLCFM
026-35051-X	K3DEX-6-02	6305 60 14WP2	PFF32/16SCF
026-35065-P	K3DEX-6-025	6305 60 14WP3	PFF32/16SCFM
026-35065-W	K3DEX-8-012	6305 60 17WP2	PFF32/16SOMDCFM
026-35081-0	K3DEX-8-025	6305 60 17WP3	PFF32/16SOMDCFU
026-35082-0	K3DNX-10-04	6305 60 18WP2	PFF32/16ZSCFM
026-35097-B	K3DNX-12-05	6305 60 18WP3	PFF320GNBRSSM
026-35097-C	K3DNX-12-05C	6305 60 21WP2	PFF320GS
026-35097-P	K3DNX-16-08	6305 60 21WP3	PFF320GSS
026-35097-S	K3DPX-10-04	6305 60 22WP2	PFF320GSSM
026-35097-V	K3DPX-12-05	6305 60 22WP3	PFF320NNBRSSM
026-35097-W	K3DPX-16-08	6305 62 17WP2	PFF320NS
026-35097-X	K3DPX-8-03	6305 62 17WP3	PFF320NSM
026-35099-C	K3V47-10-10	6305 62 18WP2	PFF320NSS
026-35099-V	K3V47-10-8	6305 62 18WP3	PFF320NSSM
026-35100-B	K3V47-4-4	6305 62 21WP2	PFF320NSU
026-35100-C	K3V47-5-4	6305 62 21WP3	PFF32G38S
026-35100-P	K3V47-8-6	6305 62 22WP2	PFF32G38SM
026-35100-S	K3V47-8-8	6305 62 22WP3	PFF32G38SS
026-35100-V	K3VVS-10-8	6306 04 00WP2	PFF32G38SU

026-35100-W	K3VVS-8-6	6306 04 00WP3	PFF32GCF
026-35100-X	K3VVS-8-8	6306 04 06WP2	PFF32GNBRSSM
026-35102-B	K3W47-10-10	6306 04 06WP3	PFF32GS
026-35102-C	K3W47-10-10C	6306 04 08WP2	PFF32GSM
026-35102-P	K3W47-10-6	6306 04 08WP3	PFF32GSS
026-35102-S	K3W47-10-8	6306 06 00WP2	PFF32GSSM
026-35102-V	K3W47-10-8C	6306 06 00WP3	PFF32GSU
026-35102-W	K3W47-4-4	6306 06 08WP2	PFF32N38S
026-35102-X	K3W47-4-4C	6306 06 08WP3	PFF32N38SM
026-35104-B	K3W47-5-4	6306 06 10WP2	PFF32N38SSM
026-35104-C	K3W47-5-5	6306 06 10WP3	PFF32N38SU
026-35104-P	K3W47-8-6	6306 08 00WP2	PFF32NNBRSSM
026-35104-S	K3W47-8-8	6306 08 00WP3	PFF32NS
026-35104-V	K3W47-8-8C	6306 08 10WP2	PFF32NSM
026-35104-W	K3WVS-10-8	6306 08 10WP3	PFF32NSS
026-35104-X	K3WVS-8-6	6306 08 12WP2	PFF32NSSM
026-35107-B	K3WVS-8-8	6306 08 12WP3	PFF32NSU
026-35107-C	K3Y47-8-6	6306 08 60WP2	PFF33/16SCF
026-35107-P	K3Y47-8-8	6306 08 62WP2	PFF33/16SCFM
026-35107-S	K402VG0100ME30	6306 08 62WP3	PFF33/16SOMDCFM
026-35107-V	K40400-13	6306 10 00WP2	PFF33/16SOMDCFU
026-35107-W	K40400-13	6306 10 00WP3	PFF33/16SOMDSSM
026-35107-X	K40400-25	6306 10 12WP2	PFF33/16ZSCFM
026-35122-C	K40400-25	6306 10 12WP3	PFF33/20SCF
026-35122-P	K40400-50	6306 12 00WP2	PFF33/20SCFM
026-35122-S	K40400-50	6306 12 00WP3	PFF33/20SOMDCFM
026-35122-V	K40400-75	6306 56 00WP2	PFF33/20SOMDCFU
026-35123-B	K40400-75	6306 56 00WP3	PFF33/20SOMDSSM
026-35123-C	K4147-6-6	6306 56 60WP2	PFF33/20ZSCFM
026-35123-P	K42L71	6306 56 60WP3	PFF33/22LCF
026-35123-S	K42L71X	6306 60 00WP2	PFF33/22LCFM
026-35123-V	K42LCF	6306 60 00WP3	PFF33/22LOMDCFM
026-35123-W	K42LCFX	6306 60 62WP2	PFF33/22LOMDCFU
026-35123-X	K42ZLCF	6306 60 62WP3	PFF33/22ZLCFM
026-35129-B	K4511SCR04B	6306 62 00WP2	PFF33G12SM
026-35129-C	K4511SCR04B	6306 62 00WP3	PFF33GCF
026-35129-P	K4511SCR11B	6307 06 00WP2	PFF33GCFM
026-35129-S	K4511SCR11B	6307 06 00WP3	PFF33GNBRSSM
026-35129-V	K4511SCR150	6307 08 00WP2	PFF33GS
026-35129-W	K4511SCR150	6307 08 00WP3	PFF33GSM
026-35136-P	K4515G14290	6308 06 10WP2	PFF33GSS
026-35264-P	K4515G14290	6308 06 10WP3	PFF33GSSM
026-35264-S	K4515N14030	6308 06 13WP2	PFF33GSU
026-35264-V	K4515N14030	6308 06 13WP3	PFF33NNBRSSM
026-35295-0	K4515N14060	6308 06 17WP2	PFF33NS
026-35624-0	K4515N14060	6308 06 17WP3	PFF33NSM
026-35875-0	K4515N14160	6308 08 10WP2	PFF33NSS
026-35975-H	K4515N14160	6308 08 10WP3	PFF33NSSM
026-35978-7	K4515N18060	6308 08 13WP2	PFF33NSU
026-35978-B	K4515N18060	6308 08 13WP3	PFF34/20SCF
026-35978-C	K4515N18160	6308 08 17WP2	PFF34/20SCFM
026-35978-P	K4515N18160	6308 08 17WP3	PFF34/20SCFU
026-35978-U	K4520N14030	6308 10 13WP2	PFF34/20SOMDCFM

026-35978-V	K4520N14030	6308 10 13WP3	PFF34/20SOMDCFU
026-36006-H	K4520N14060	6308 10 17WP2	PFF34/20SOMDSSM
026-36007-H	K4520N14060	6308 10 17WP3	PFF34/20ZSCFM
026-36009-U	K4520N14160	6308 10 21WP2	PFF34/25SCF
026-36011-H	K4520N14160	6308 10 21WP3	PFF34/25SCFM
026-36012-P	K4520N14300	6308 12 17WP2	PFF34/25SOMDCFM
026-36013-H	K4520N14300	6308 12 17WP3	PFF34/25SOMDCFU
026-36014-W	K491-25	6308 12 21WP2	PFF34/25SOMDSSM
026-36017-H	K491-25	6308 12 21WP3	PFF34/25ZSCFM
026-36020-H	K491-50	6308 56 10WP2	PFF34/28LCF
026-36027-G	K491-50	6308 56 10WP3	PFF34/28LCFM
026-36029-H	K492-15	6308 56 11WP2	PFF34/28LOMDCFM
026-36030-H	K492-15	6308 56 11WP3	PFF34/28LOMDSSM
026-36032-H	K492-25	6308 56 13WP2	PFF34/28ZLCFM
026-36033-H	K492-25	6308 56 13WP3	PFF34G12D1-18.6CFM
026-36046-S	K4947-10-4	6308 56 14WP2	PFF34G12S
026-36046-T	K4947-12-4	6308 56 14WP3	PFF34G34CFM
026-36048-H	K4947-14-4	6308 56 17WP2	PFF34G34SM
026-36060-T	K4947-14-5	6308 56 17WP3	PFF34G38SM
026-36061-T	K4947-14-6	6308 56 18WP2	PFF34GCF
026-36063-T	K4947-16-5	6308 56 18WP3	PFF34GCFM
026-36092-H	K4947-16-6	6308 60 13WP2	PFF34GNBRSSM
026-36093-P	K4947-17-4	6308 60 13WP3	PFF34GS
026-36097-H	K4947-17-6	6308 60 14WP2	PFF34GSM
026-36108-H	K4947-18-6	6308 60 14WP3	PFF34GSS
026-36110-H	K4947-18-8	6308 60 17WP2	PFF34GSSM
026-36115-S	K4947-22-10	6308 60 17WP3	PFF34GSU
026-36118-H	K4947-22-8	6308 60 18WP2	PFF34NNBRSSM
026-36119-H	K4947-26-12	6308 60 18WP3	PFF34NS
026-36122-H	K4947-30-16	6308 62 17WP2	PFF34NSM
026-36131-H	K4A060-1.0N	6308 62 17WP3	PFF34NSS
026-36134-H	K4AV4-20-16	6308 62 18WP2	PFF34NSSM
026-36134-K	K4AV4-20-20	6308 62 18WP3	PFF34NSU
026-36135-H	K4AV4-24-20	6308 62 21WP2	PFF35/25SCF
026-36136-P	K4AV4-24-24	6308 62 21WP3	PFF35/25SCFM
026-36136-S	K4AV4-32-24	6308 62 22WP2	PFF35/25SOMDCFM
026-36139-H	K4AV4-32-32	6308 62 22WP3	PFF35/25ZSCFM
026-36140-H	K4AV6-20-20	6309 06 10WP2	PFF35/30SCF
026-36142-T	K4AV6-24-20	6309 06 10WP3	PFF35/30SCFM
026-36143-A	K4AV6-24-24	6309 06 13WP2	PFF35/30SOMDCFM
026-36143-G	K4AV6-32-24	6309 06 13WP3	PFF35/30SOMDCFU
026-36143-H	K4AV6-32-32	6309 06 17WP2	PFF35/30SOMDSSM
026-36143-K	K4FV4-20-16	6309 06 17WP3	PFF35/30ZSCFM
026-36146-B	K4FV4-20-20	6309 08 10WP2	PFF35/35LCF
026-36146-P	K4FV4-24-20	6309 08 10WP3	PFF35/35LCFM
026-36147-A	K4FV4-24-24	6309 08 13WP2	PFF35/35LOMDCFM
026-36147-H	K4FV4-32-24	6309 08 13WP3	PFF35/35L-SS
026-36150-H	K4FV4-32-32	6309 08 17WP2	PFF35/35ZLCFM
026-36165-H	K4FV6-20-20	6309 08 17WP3	PFF35G1S
026-36166-U	K4FV6-20-24	6309 10 13WP2	PFF35G1SM
026-36168-H	K4FV6-24-20	6309 10 13WP3	PFF35GCF
026-36169-H	K4FV6-24-24	6309 10 17WP2	PFF35GCFM
026-36171-H	K4FV6-32-24	6309 10 17WP3	PFF35G-G18SM

026-36189-P	K4FV6-32-32	6309 10 21WP2	PFF35GNBRSSM
026-36206-P	K4NV4-20-16	6309 10 21WP3	PFF35GS
026-36207-B	K4NV4-20-20	6309 12 17WP2	PFF35GSM
026-36207-W	K4NV4-20-24	6309 12 17WP3	PFF35GSS
026-36245-H	K4NV4-24-20	6309 12 21WP2	PFF35GSSM
026-36246-H	K4NV4-24-24	6309 12 21WP3	PFF35GSU
026-36246-J	K4NV4-32-24	6309 56 10WP2	PFF35NNBRSSM
026-36248-H	K4NV4-32-32	6309 56 10WP3	PFF35NS
026-36258-P	K4NV6-20-20	6309 56 11WP2	PFF35NSM
026-36274-P	K4NV6-20-24	6309 56 11WP3	PFF35NSS
026-36275-U	K4NV6-24-20	6309 56 13WP2	PFF35NSSM
026-36277-G	K4NV6-24-24	6309 56 13WP3	PFF35NSU
026-36277-H	K4NV6-32-24	6309 56 14WP2	PFF36/35LCF
026-36295-G	K4NV6-32-32	6309 56 14WP3	PFF36/35LCFM
026-36295-H	K593014	6309 56 17WP2	PFF36/35LOMDCFM
026-36296-H	K593014	6309 56 17WP3	PFF36/35ZLCFM
026-36297-G	K593025	6309 56 18WP2	PFF36/38SCF
026-36298-C	K593025	6309 56 18WP3	PFF36/38SCFM
026-36298-P	K593060	6309 60 13WP2	PFF36/38SOMDCFM
026-36298-S	K593060	6309 60 13WP3	PFF36/38SOMDSSM
026-36298-W	K593108	6309 60 14WP2	PFF36/38ZSCFM
026-36299-G	K593108	6309 60 14WP3	PFF36/42LCF
026-36299-H	K5DEX-6-025SL50	6309 60 17WP2	PFF36/42LCFM
026-36300-P	K5DPX-10-05	6309 60 17WP3	PFF36/42LOMDCFM
026-36300-U	K5DPX-6-03SL36	6309 60 18WP2	PFF36/42ZLCFM
026-36301-H	K5DPX-6-03SL50	6309 60 18WP3	PFF36G114S
026-36302-H	K6847-10-10	6309 62 17WP2	PFF36G114SM
026-36314-U	K6847-10-10C	6309 62 17WP3	PFF36G34SM
026-36315-H	K6847-10-12	6309 62 18WP2	PFF36G34VITSM
026-36317-U	K6847-10-6	6309 62 18WP3	PFF36GCF
026-36319-G	K6847-10-8	6309 62 21WP2	PFF36GCFM
026-36319-H	K6847-10-8C	6309 62 21WP3	PFF36G-G18SM
026-36336-H	K6847-4-4	6309 62 22WP2	PFF36GNBRSSM
026-36337-P	K6847-4-4C	6309 62 22WP3	PFF36GS
026-36337-U	K6847-5-4	631-001-230-0-00	PFF36GSM
026-36342-P	K6847-5-5	631-001-230-F-00	PFF36GSS
026-36347-H	K6847-8-6	631-002-230-0-00	PFF36GSSM
026-36352-H	K6847-8-6C	631-002-230-F-00	PFF36GSU
026-36354-P	K6847-8-8	631-004-230-0-00	PFF36NNBRSSM
026-36354-U	K6847-8-8C	631-004-230-F-00	PFF36NS
026-36355-H	K68VS-10-8	631-006-230-0-00	PFF36NSM
026-36357-U	K68VS-8-6	631-006-230-F-00	PFF36NSS
026-36358-H	K68VS-8-8	6315 06 10WP2	PFF36NSSM
026-36360-H	K6A47-12-12	6315 06 10WP3	PFF36NSU
026-36361-H	K6A47-16-16	6315 06 13WP2	PFF38/38SCF
026-36362-U	K6A47-8-8	6315 06 13WP3	PFF38/38SCFM
026-36364-P	K6AV4-12-10	6315 08 13WP2	PFF38/38SOMDCFM
026-36364-T	K6AV4-12-12	6315 08 13WP3	PFF38/38S-SS
026-36364-U	K6AV4-12-16	6315 08 17WP2	PFF38/38ZSCFM
026-36400-H	K6AV4-16-12	6315 08 17WP3	PFF38/42LCF
026-36404-U	K6AV4-16-16	6315 56 14WP2	PFF38/42LCFM
026-36405-H	K6AV4-16-16C	6315 56 14WP3	PFF38/42LOMDCFM
026-36408-U	K6AV4-16-20	6315 60 18WP2	PFF38/42LOMDSSM

026-36409-T	K6AV4-20-16	6315 60 18WP3	PFF38/42L-SS
026-36418-H	K6AV4-20-20	6316 04 00WP2	PFF38/42LVITOMDCFM
026-36438-W	K6AV4-20-20C	6316 04 00WP3	PFF38/42ZLCFM
026-36441-B	K6AV4-20-24	6316 06 00WP2	PFF38G112CFM
026-36441-P	K6AV4-24-20	6316 06 00WP3	PFF38G112S
026-36443-P	K6AV4-24-20C	6316 08 00WP2	PFF38G112SM
026-36443-U	K6AV4-24-24	6316 08 00WP3	PFF38G112SS
026-36446-P	K6AV4-24-32	6316 10 00WP2	PFF38G114CFM
026-36455-H	K6AV4-32-24	6316 10 00WP3	PFF38G114SM
026-36456-H	K6AV4-32-32	6316 12 00WP2	PFF38GCF
026-36457-B	K6AV4-8-10	6316 12 00WP3	PFF38GCFM
026-36457-P	K6AV6-16-20	6316 56 00WP2	PFF38GNBRSSM
026-36457-S	K6AV6-20-20	6316 56 00WP3	PFF38GS
026-36458-H	K6AV6-20-20C	6316 60 00WP2	PFF38GSM
026-36464-H	K6AV6-20-24	6316 60 00WP3	PFF38GSS
026-36467-U	K6AV6-24-20	6316 62 00WP2	PFF38GSSM
026-36477-P	K6AV6-24-20C	6316 62 00WP3	PFF38GSU
026-36478-H	K6AV6-24-24	6321 06 10WP2	PFF38NNBRSSM
026-36480-P	K6AV6-24-24C	6321 06 10WP3	PFF38NS
026-36481-P	K6AV6-24-32	6321 06 13WP2	PFF38NSM
026-36482-P	K6AV6-32-24	6321 06 13WP3	PFF38NSS
026-36484-U	K6AV6-32-32	6321 06 17WP2	PFF38NSSM
026-36522-H	K6AV6-32-32C	6321 06 17WP3	PFF38NSU
026-36525-H	K6AV6-40-40	6321 08 10WP2	PFF5510
026-36540-H	K6AV6-48-40	6321 08 10WP3	PFF5525
026-36562-H	K6AV6-48-48	6321 08 13WP2	PFF5551
026-36565-H	K6AVS-12-8	6321 08 13WP3	PFF5601
026-36583-P	K6AVS-8-8	6321 08 17WP2	PFF5605
026-36587-T	K6F47-12-12	6321 08 17WP3	PFF5607
026-36600-G	K6F47-16-16	6321 10 13WP2	PFF5608
026-36600-H	K6FV4-12-10	6321 10 13WP3	PFF5609
026-36602-H	K6FV4-12-12	6321 10 17WP2	PFF5610
026-36607-P	K6FV4-12-12-SL55	6321 10 17WP3	PFF610GNBRSSM
026-36617-G	K6FV4-12-16	6321 10 21WP2	PFF610GS
026-36617-H	K6FV4-16-12	6321 10 21WP3	PFF610GSM
026-36619-P	K6FV4-16-12-SL55	6321 12 17WP2	PFF610GSS
026-36625-H	K6FV4-16-16	6321 12 17WP3	PFF610GSSM
026-36635-T	K6FV4-16-16C	6321 12 21WP2	PFF610NNBRSSM
026-36635-W	K6FV4-16-16-SL55	6321 12 21WP3	PFF610NS
026-36641-P	K6FV4-16-20	6321 56 10WP2	PFF610NSM
026-36644-H	K6FV4-20-16	6321 56 10WP3	PFF610NSS
026-36658-G	K6FV4-20-16-SL55	6321 56 11WP2	PFF610NSSM
026-36658-H	K6FV4-20-20	6321 56 11WP3	PFF612GNBRSSM
026-36697-P	K6FV4-20-20C	6321 56 13WP2	PFF612GS
026-36703-T	K6FV4-20-20-SL60	6321 56 13WP3	PFF612GSM
026-36703-U	K6FV4-24-20	6321 56 14WP2	PFF612GSS
026-36709-U	K6FV4-24-20C	6321 56 14WP3	PFF612GSSM
026-36710-P	K6FV4-24-20-SL60	6321 56 17WP2	PFF612NNBRSSM
026-36730-T	K6FV4-24-24	6321 56 17WP3	PFF612NS
026-36766-B	K6FV4-24-24-SL70	6321 56 18WP2	PFF612NSM
026-36766-C	K6FV4-32-24	6321 56 18WP3	PFF612NSS
026-36766-V	K6FV4-32-32	6321 60 13WP2	PFF612NSSM
026-36766-X	K6FV4-32-32-SL70	6321 60 13WP3	PFF62/12SCF

026-36776-H	K6FV4-8-10	6321 60 14WP2	PFF62/12SCFM
026-36777-H	K6FV6-16-20	6321 60 14WP3	PFF62/12SOMDCFM
026-36778-H	K6FV6-20-20	6321 60 17WP2	PFF62/12ZSCFM
026-36779-H	K6FV6-20-20-SL60	6321 60 17WP3	PFF62/14SCF
026-36782-H	K6FV6-20-24	6321 60 18WP2	PFF62/14SCFM
026-36794-H	K6FV6-24-20	6321 60 18WP3	PFF62/14SOMDCFM
026-36808-H	K6FV6-24-24	6321 62 17WP2	PFF62/14ZSCFM
026-36818-H	K6FV6-24-24C	6321 62 17WP3	PFF62/16SCF
026-36821-H	K6FV6-24-24-SL70	6321 62 18WP2	PFF62/16SCFM
026-36822-H	K6FV6-24-32	6321 62 18WP3	PFF62/16SOMDCFM
026-36843-H	K6FV6-32-24	6321 62 21WP2	PFF62/16ZSCFM
026-36855-7	K6FV6-32-24C	6321 62 21WP3	PFF62G38NBRSSM
026-36855-P	K6FV6-32-32	6321 62 22WP2	PFF62G38S
026-36855-S	K6FV6-32-32C	6321 62 22WP3	PFF62G38SM
026-36855-W	K6FVS-12-8	63-2110AR	PFF62G38SS
026-36856-B	K6FVS-8-8	63-2110AR	PFF62G38SSM
026-36856-C	K6N47-12-12	6322 06 04WP2	PFF62G38SU
026-36856-P	K6N47-12-12-1P-SL115	6322 06 04WP3	PFF62GCF
026-36856-S	K6NV4-12-10	6322 08 06WP2	PFF62GCFM
026-36856-V	K6NV4-12-12	6322 08 06WP3	PFF62GS
026-36856-W	K6NV4-12-12-SL100	6322 10 07WP2	PFF62GSM
026-36856-X	K6NV4-12-16	6322 10 07WP3	PFF62GSU
026-36857-B	K6NV4-16-12	6322 12 62WP3	PFF62N38NBRSSM
026-36857-P	K6NV4-16-12-SL100	6322 56 56WP2	PFF62N38S
026-36857-S	K6NV4-16-16	6322 56 56WP3	PFF62N38SM
026-36857-V	K6NV4-16-16C	6322 60 08WP2	PFF62N38SS
026-36857-X	K6NV4-16-16-SL100	6322 60 08WP3	PFF62N38SSM
026-36925-H	K6NV4-16-20	6322 60 60WP2	PFF62N38SU
026-36925-J	K6NV4-20-16	6322 60 60WP3	PFF62NS
026-36929-G	K6NV4-20-16-SL115	6322 62 60WP2	PFF62NSM
026-36929-H	K6NV4-20-20	6322 62 60WP3	PFF62NSU
026-36933-0	K6NV4-20-20C	6325 56 133WP2	PFF63/16SCF
026-37000-0	K6NV4-20-20-SL120	6325 56 133WP3	PFF63/16SCFM
026-37006-H	K6NV4-20-20-SL330	6325 60 133WP2	PFF63/16SOMDCFM
026-37026-D	K6NV4-20-24	6325 60 133WP3	PFF63/16S-SS
026-37027-D	K6NV4-24-20	6326 04 00WP2	PFF63/16ZSCFM
026-37029-H	K6NV4-24-20C	6326 04 00WP3	PFF63/20SCF
026-37034-H	K6NV4-24-20-SL135	6326 06 00WP2	PFF63/20SCFM
026-37035-H	K6NV4-24-24	6326 06 00WP3	PFF63/20SOMDCFM
026-37036-H	K6NV4-24-24-SL140	6326 08 00WP2	PFF63/20S-SS
026-37049-0	K6NV4-24-32	6326 08 00WP3	PFF63/20ZSCFM
026-37053-A	K6NV4-32-24	6326 10 00WP2	PFF63/22LCF
026-37060-0	K6NV4-32-32	6326 10 00WP3	PFF63/22LCFM
026-37088-H	K6NV4-8-10	6326 12 00WP2	PFF63/22LOMDCFM
026-37107-H	K6NV6-16-20	6326 12 00WP3	PFF63/22LOMDCFU
026-37109-H	K6NV6-20-20	6326 56 00WP2	PFF63/22ZLCFM
026-37112-H	K6NV6-20-20-SL120	6326 56 00WP3	PFF63G12CFM
026-37123-0	K6NV6-20-24	6326 60 00WP2	PFF63G12SM
026-37124-0	K6NV6-24-20	6326 60 00WP3	PFF63G12SU
026-37127-G	K6NV6-24-20C	6326 62 00WP2	PFF63GCF
026-37129-G	K6NV6-24-24	6326 62 00WP3	PFF63GCFM
026-37129-H	K6NV6-24-24C	632FIL	PFF63GNBRSSM
026-37130-0	K6NV6-24-32	632FIL	PFF63GS

026-37133-H	K6NV6-32-24	6336 08 60WP3	PFF63GSM
026-37135-G	K6NV6-32-24C	6340 04 00WP2	PFF63GSS
026-37135-H	K6NV6-32-32	6340 04 00WP3	PFF63GSSM
026-37137-0	K6NV6-32-32C	6340 06 00WP2	PFF63GSU
026-37169-H	K6NV6-32-32-SL145	6340 06 00WP3	PFF63NNBRSSM
026-37220-H	K6NVS-12-8	6340 08 00WP2	PFF63NS
026-37225-H	K6NVS-8-8	6340 08 00WP3	PFF63NSM
026-37233-H	K71A4B5CA	6340 10 00WP2	PFF63NSS
026-37251-G	K7D47-20-10	6340 10 00WP3	PFF63NSSM
026-37262-H	K80A4B5C/E	6340 12 00WP2	PFF63NSU
026-37275-P	K900021	6340 12 00WP3	PFF64/20SCF
026-37275-U	K900022	6340 56 00WP2	PFF64/20SCFM
026-37295-5	K900058	6340 56 00WP3	PFF64/20SOMDCFM
026-37304-5	K900059	6340 60 00WP2	PFF64/20ZSCFM
026-37323-0	K900060	6340 60 00WP3	PFF64/25SCF
026-37337-H	K900061	6340 62 00WP2	PFF64/25SCFM
026-37342-G	K900075	6340 62 00WP3	PFF64/25SOMDCFM
026-37395-0	K900076	6-345-N552-9	PFF64/25ZSCFM
026-37403-P	K900083	6-346-N552-9	PFF64/28LCF
026-37416-0	K900089	6-347-N552-9	PFF64/28LCFM
026-37425-H	K900090	6-347-V894-9	PFF64/28LOMDCFM
026-37462-H	K900103	6-348-V894-9	PFF64/28ZLCFM
026-37463-H	K900104	6-349-N552-9	PFF64G34CFM
026-37465-H	K900105	6-349-V894-9	PFF64G34S
026-37469-0	K900115	635/DER03	PFF64G34SM
026-37471-H	K900118	635/DER03-CAN	PFF64GCF
026-37504-0	K900120	635/DER03-M	PFF64GCFM
026-37513-H	K9147-12-10	635/DER03-PDP	PFF64GNBRSSM
026-37522-P	K9147-12-12	635/DER05	PFF64GS
026-37535-P	K9147-16-16	635/DER05-422-X7	PFF64GSM
026-37544-H	K9147-4-4	635/DER05-CAN	PFF64GSS
026-37546-H	K9147-6-4	635/DER05-CAN-X7	PFF64GSSM
026-37549-H	K9147-6-5	635/DER05-N-232	PFF64GSU
026-37560-G	K9147-6-6	635/DER05-PDP	PFF64NNBRSSM
026-37582-H	K9147-8-6	635/DER07	PFF64NS
026-37586-P	K9147-8-8	635/KDER01-E-PDP	PFF64NSM
026-37608-H	K91NX-6-04	635/KDER03	PFF64NSS
026-37626-H	K91V4-20-20	635/KDER03-485	PFF64NSSM
026-37642-H	K91V4-24-24	635/KDER03-CAN	PFF64NSU
026-37644-P	K91V4-32-32	635/KDER03-E-232	PFF65/12GS
026-37649-0	K9247-10-10	635/KDER03-E-PDP	PFF65/12GSM
026-37657-0	K9247-10-10C	635/KDER03-PDP	PFF65/25SCF
026-37659-5	K9247-10-8	635/KDER05	PFF65/25SCFM
026-37686-H	K9247-12-10	635/KDER05-232	PFF65/25SOMDCFM
026-37700-G	K9247-12-12	635/KDER05-422	PFF65/25ZSCFM
026-37714-0	K9247-12-12C	635/KDER05-CAN	PFF65/30SCF
026-37715-8	K9247-12-8	635/KDER05-E	PFF65/30SCFM
026-37715-H	K9247-16-12	635/KDER05-E-232	PFF65/30SOMDCFM
026-37719-0	K9247-16-16	635/KDER05-E-PDP	PFF65/30ZSCFM
026-37735-P	K9247-16-16C	635/KDER05-PDP	PFF65/35LCF
026-37740-0	K9247-2-4	635/KDER05-PDP-BS	PFF65/35LCFM
026-37766-H	K9247-4-4	635/KDER07	PFF65/35LOMDCFM
026-37781-0	K9247-4-4C	635/KDER07-CAN	PFF65/35LVITOMDCFM

026-37790-0	K9247-4-5	635/KDER07-E-PDP	PFF65/35ZLCFM
026-37972-H	K9247-4-6	635/KREV04-CAN-X7	PFF65/38SCF
026-37988-0	K9247-6-4	6350 00 00 03	PFF65G1CFM
026-37991-8	K9247-6-5	635-01006-2	PFF65G1SM
026-37991-A	K9247-6-6	6-350-N552-9	PFF65GCF
026-37991-H	K9247-6-6C	6350V	PFF65GCFM
026-37995-0	K9247-6-8	6-350-V894-9	PFF65GNBRSSM
026-37997-H	K9247-8-10	6351 04 00WP2	PFF65GS
026-38000-0	K9247-8-4	6351 04 00WP3	PFF65GSM
026-38002-G	K9247-8-6	6351 06 00WP2	PFF65GSS
026-38013-H	K9247-8-8	6351 06 00WP3	PFF65GSSM
026-38014-H	K9247-8-8C	6351 08 00WP2	PFF65GSU
026-38016-0	K92LX-6-05	6351 08 00WP3	PFF65NNBRSSM
026-38017-A	K92LX-8-08N	6351 10 00WP2	PFF65NS
026-38017-H	K92NX-12-10N	6351 10 00WP3	PFF65NSM
026-38027-H	K92NX-12-12N	6351 12 00WP2	PFF65NSS
026-38050-H	K92NX-16-16	6351 12 00WP3	PFF65NSSM
026-38076-G	K92NX-16-16N	6351 56 00WP2	PFF65NSU
026-38099-P	K92NX-4-04	6351 56 00WP3	PFF66/35LCF
026-38102-0	K92NX-4-04N	6351 60 00WP2	PFF66/35LCFM
026-38133-H	K92NX-6-06	6351 60 00WP3	PFF66/35LOMDCFM
026-38139-0	K92NX-6-06N	6-351-N552-9	PFF66/35ZLCFM
026-38143-0	K92NX-8-06	6-351-V894-9	PFF66/38SCF
026-38178-0	K92NX-8-08	6352 60 17WP2	PFF66/38SCFM
026-38183-H	K92NX-8-08N	6352 60 17WP3	PFF66/38SOMDCFM
026-38187-G	K92PX-12-12	6352 60 21WP2	PFF66/38S-SS
026-38216-0	K92PX-16-12N	6352 60 21WP3	PFF66/38ZSCFM
026-38223-P	K92PX-4-02	6-352-N552-9	PFF66/42LCF
026-38276-H	K92PX-4-02N	6-352-V894-9	PFF66/42LCFM
026-38281-H	K92PX-4-03	6353 10 21WP2	PFF66/42LOMDCFM
026-38286-H	K92PX-4-03N	6353 10 21WP3	PFF66/42ZLCFM
026-38293-P	K92PX-4-04	6353 60 21WP2	PFF66G114SM
026-38297-H	K92PX-4-04N	6353 60 21WP3	PFF66GCF
026-38309-0	K92PX-6-06	6-353-V894-9	PFF66GCFM
026-38311-H	K92V4-10-10	6355 13 27WP2	PFF66GNBRSSM
026-38316-H	K92V4-12-12	635B-EX	PFF66GS
026-38323-0	K92V4-16-12	635B-WHEEL-EX	PFF66GSM
026-38326-0	K92V4-16-16	636/BP180-2-3-V1/BP63641	PFF66GSS
026-38329-H	K92V4-20-20	636/BP465-7-3-V1/BP63640	PFF66GSSM
026-38345-H	K92V4-24-24	636/BP636-A-3-V1/BP63642	PFF66GSU
026-38356-0	K92V4-32-32	636/DR08-L0RH3V2/ACS63620	PFF66GVITSM
026-38377-0	K92V6-20-20	636/NT30-050-3-V1/SV63600	PFF66NNBRSSM
026-38385-P	K92V6-24-24	6360B	PFF66NS
026-38411-G	K92V6-32-32	6360B	PFF66NSM
026-38411-H	K92VS-10-8	6366 04 06WP2	PFF66NSS
026-38418-P	K92VS-6-6	6366 04 06WP3	PFF66NSSM
026-38419-H	K92VS-8-6	6366 04 08WP2	PFF66NSU
026-38423-H	K92VS-8-8	6366 04 08WP3	PFF67555
026-38435-0	KA1016	6366 06 08WP2	PFF67605
026-38449-H	KA1222	6366 06 08WP3	PFF68G112SM
026-38455-H	KA1627	6366 06 10WP2	PFF68GNBRSSM
026-38488-H	KA2335	6366 06 10WP3	PFF68GS
026-38489-G	KA3045	6366 08 10WP2	PFF68GSM

026-38491-0	KA3250	6366 08 10WP3	PFF68GSS
026-38496-P	KA4060	6366 08 12WP2	PFF68GSSM
026-38500-0	KA5070	6366 08 12WP3	PFF68GSU
026-38503-P	KA6080	6366 08 60WP2	PFF68NNBRSSM
026-38504-P	KADC522P40D	6366 08 60WP3	PFF68NS
026-38533-H	KADR522P20DA7KLAX989	6366 08 62WP2	PFF68NSM
026-38537-G	KARRY/MANOGLAS	6366 08 62WP3	PFF68NSS
026-38557-H	KARRYFLARE	6366 10 12WP2	PFF68NSSM
026-38589-H	KARRYFLARE/BLOC	6366 10 12WP3	PFF68NSU
026-38598-T	KARRYFLARE/BPLATE	6366 10 14WP2	PFG-1.5A-SI
026-38608-G	KARRYFLARE/BUFFER	6366 10 14WP3	PFG-1.5A-SI
026-38635-7	KARRYFLARE/CHART	6366 12 14WP2	PFG-1.5-NBR
026-38636-7	KARRYFLARE/COVER	6366 12 14WP3	PFG-1.5-NBR
026-38639-H	KARRYFLARE/CSCREW	6366 56 08WP2	PFG-10A-FKM
026-38671-H	KARRYFLARE/FPIN	6366 56 08WP3	PFG-10A-FKM
026-38729-H	KARRYFLARE/FPIN42	6366 56 60WP2	PFG-10A-NBR
026-38763-H	KARRYFLARE/PISTON	6366 56 60WP3	PFG-10A-NBR
026-38804-A	KARRYFLARE/PISTONKIT	6366 60 62WP2	PFG-10A-NBRE
026-38810-0	KARRYFLARE/PSPRING	6366 60 62WP3	PFG-10A-NBRE
026-38855-H	KARRYFLARE/RHOLD	6368 60 08WP2	PFG-10A-SI
026-38862-G	KARRYFLARE/SFRAME	637/D6K08-3-S4	PFG-10A-SI
026-38866-H	KARRYFLARE/STICKER	637/D6K16/16-7	PFG-10A-SIE
026-38876-G	KARRYFLARE/TSTICK	637/D6K16/30-7	PFG-10A-SIE
026-38885-0	KARRYFLARE/TSTOPKPL	637-00003-0	PFG-10A-U
026-38899-H	KARRYFLARE/WHEEL	637-00004-0	PFG-10A-U
026-38900-T	KAY5X-6-03	6379 06 10WP2	PFG-10A-Z
026-38919-0	KAYLX-6-03N	6379 06 10WP3	PFG-10A-Z
026-38936-G	KB/G100U	6379 06 13WP2	PFG-10-NBR
026-38936-H	KB/G150U	6379 06 13WP3	PFG-10-NBR
026-38937-P	KB/G200U	6379 06 17WP2	PFG-10-SI
026-38938-P	KB/G30RS	6379 06 17WP3	PFG-10-SI
026-38962-7	KB/GEB-TR18G	6379 56 10WP2	PFG-10-SIE
026-38967-G	KB/GEB-TR35	6379 56 10WP3	PFG-10-SIE
026-38967-H	KB/GEB-TR45	6379 56 11WP2	PFG-120-CR
026-38968-G	KB/M100B	6379 56 11WP3	PFG-120-CR
026-38968-H	KB/M150BS	6379 56 13WP2	PFG-120-NBR
026-38971-0	KB/M30BS	6379 56 13WP3	PFG-120-NBR
026-38975-0	KB/M50B	6379 56 14WP2	PFG-120-SI
026-39010-P	KB/M50BS	6379 56 14WP3	PFG-120-SI
026-39011-H	KB/MOT-TR35	6379 56 17WP2	PFG-120-U
026-39012-H	KB/MOT-TR45	6379 56 17WP3	PFG-120-U
026-39091-H	KB0507	6379 56 18WP2	PFG-150-CR
026-39098-H	KB0709	6379 56 18WP3	PFG-150-CR
026-39103-0	KB0911	6379 60 13WP2	PFG-150-NBR
026-39104-0	KB100/20	6379 60 13WP3	PFG-150-NBR
026-39105-0	KB100/40	6379 60 14WP2	PFG-150-NBRE
026-39119-H	KB1004	6379 60 14WP3	PFG-150-NBRE
026-39122-H	KB1004	6379 60 17WP2	PFG-150-SI
026-39123-H	KB1012	6379 60 17WP3	PFG-150-SI
026-39125-A	KB1012	6379 60 18WP2	PFG-150-U
026-39125-H	KB1027	6379 60 18WP3	PFG-150-U
026-39127-H	KB1027	637F0D6R0230000000RD20BF	PFG-15A-FKM
026-39128-H	KB1113	637F0D6R0230CAN000RD2	PFG-15A-FKM

026-39147-P	KB1315	637F0D6R0270000000RD2	PFG-15A-NBR
026-39161-0	KB1417	637F0D6R0270000SBTRD2	PFG-15A-NBR
026-39172-H	KB147-10-10	637F0D6R0270PC8SBTHF2	PFG-15A-SI
026-39176-H	KB147-12-10	637F0D6R0270PC8SBTRD2	PFG-15A-SI
026-39182-G	KB147-12-12	637F0D6R0270PCASBTRD2	PFG-15A-SIE
026-39183-H	KB147-12-12C	637F0D6R0270PDP000RD2	PFG-15A-SIE
026-39192-0	KB147-16-16	637F0D6R0430000000RD2	PFG-15A-U
026-39195-H	KB147-16-16C	637F0D6R0430000000RD20BF	PFG-15A-U
026-39197-H	KB147-4-4	637F0D6R0430CAN000RD2	PFG-15-NBR
026-39201-0	KB147-6-5	637F0D6R0430CANEAERD2	PFG-15-NBR
026-39204-A	KB147-6-6	637F0D6R0470000000RD2	PFG-15-SI
026-39209-H	KB147-6-6C	637F0D6R0470000000RD20BF	PFG-15-SI
026-39232-0	KB147-6-8	637F0D6R0470000000RG1	PFG-15-U
026-39242-H	KB147-8-6	637F0D6R0470000000SC20BF	PFG-15-U
026-39273-0	KB147-8-8	637F0D6R0470000EAERD2	PFG-1-NBR
026-39274-H	KB147-8-8C	637F0D6R0470422000RD2X7X	PFG-1-NBR
026-39279-0	KB150/20	637F0D6R0470485000RD2	PFG-1-SI
026-39315-H	KB150/40	637F0D6R0470CAN000RD2B7X	PFG-1-SI
026-39359-G	KB1518	637F0D6R0630000000RD2	PFG-200-CR
026-39363-H	KB1720	637F0D6R0670000000RD2	PFG-200-CR
026-39404-B	KB1PX-6-06	637F0D6R0670000000RD20BF	PFG-200-NBR
026-39409-H	KB1V4-12-12	637F0D6R0670422000RD2X7X	PFG-200-NBR
026-39410-P	KB1V4-16-16	637F0D6R0670PC8SBTRD2	PFG-200-NBRE
026-39425-H	KB1V4-20-20	637F0D6R0670PCASBTRD2	PFG-200-NBRE
026-39431-H	KB1V4-24-24	637F0D6R0670PDP000RD2	PFG-200-SI
026-39439-H	KB1V4-32-32	637F0D6R0670PDP000RD2BSX	PFG-200-SI
026-39443-H	KB1V6-20-20	637F0D6R1030000000RD2	PFG-200-U
026-39483-0	KB1V6-24-24	637F0D6R1030CC8SBTRD2Z23	PFG-200-U
026-39487-G	KB1V6-32-32	637F0D6R1070000000RD2	PFG-20B-CR
026-39487-H	KB1VS-10-8	637F0D6R1070000000RD20BF	PFG-20B-CR
026-39490-H	KB1VS-6-6	637F0D6R1070000SBTRD2	PFG-20B-FKM
026-39505-H	KB1VS-8-8	637F0D6R1070CANEAERD2	PFG-20B-FKM
026-39509-H	KB200/20	637F0D6R1070PC8SBTRD2	PFG-20B-NBR
026-39528-H	KB2023	637F0D6R1070PCASBTRD2	PFG-20B-NBR
026-39566-G	KB247-10-10	637F0D6R1070PDP000RD2	PFG-20B-SI
026-39566-H	KB247-10-8	637F0D6R1070PDP000RD2BSX	PFG-20B-SI
026-39583-0	KB247-12-10	637F0D6R1070PDPSBTRD2	PFG-20B-U
026-39584-P	KB247-12-12	637F0D6R1630000SBTRD2	PFG-20B-U
026-39588-P	KB247-12-12C	637F0D6R1670000000RD2	PFG-20-NBR
026-39591-H	KB247-16-12	637F0D6R1670PC8SBTRD2	PFG-20-NBR
026-39622-G	KB247-16-16	637F0D6R1670PDP000RD2	PFG-20-SI
026-39622-H	KB247-16-16C	637F0D6R2230CAN000RD2X7X	PFG-20-SI
026-39631-P	KB247-2-4	637F0D6R2270000000RD2	PFG-20-SIE
026-39659-D	KB247-4-4	637F0D6R2270000000RD20BF	PFG-20-SIE
026-39680-H	KB247-4-4C	637F0D6R2270CAN000RD2	PFG-20-U
026-39681-H	KB247-6-4	637F0D6R3070000000RD2	PFG-20-U
026-39687-P	KB247-6-5	637F0D6R3070000000RD20BF	PFG-25-FKM
026-39727-S	KB247-6-6	637F0D6R3070000000SC20BF	PFG-25-FKM
026-39732-P	KB247-6-6C	637F0D6R3070PC8SBTHF2	PFG-25-NBR
026-39734-H	KB247-8-6	637F0D6R3070PDP000RD2	PFG-25-NBR
026-39735-H	KB247-8-8	637FKD6R0230000000HF2	PFG-25-SI
026-39736-H	KB247-8-8C	637FKD6R0230000000RD2	PFG-25-SI
026-39738-P	KB2528	637FKD6R0230000000SC2	PFG-25-U

026-39739-P	KB2831	637FKD6R0230000EAEHF2	PFG-25-U
026-39740-P	KB2NX-4-04	637FKD6R0230232000SC2	PFG-25-Z
026-39748-0	KB2PX-4-03	637FKD6R0230232EAEHF2	PFG-25-Z
026-39750-H	KB2PX-4-04	637FKD6R0230485EAERD2	PFG-2A-NBR
026-39760-H	KB2PX-6-06	637FKD6R0230CAN000HF2	PFG-2A-NBR
026-39775-H	KB2V4-12-12	637FKD6R0230CAN000RD2	PFG-2A-NBRE
026-39776-H	KB2V4-16-16	637FKD6R0230CANEAERD2	PFG-2A-NBRE
026-39779-H	KB2V4-20-20	637FKD6R0230PDPSBTRD2	PFG-2A-SI
026-39780-H	KB2V4-24-24	637FKD6R023ECAN000RD2	PFG-2A-SI
026-39781-H	KB2V4-32-32	637FKD6R0270000000HF2	PFG-2A-SIE
026-39782-H	KB2V6-20-20	637FKD6R0270000000RD2	PFG-2A-SIE
026-39787-H	KB2V6-24-24	637FKD6R0270000EAERD2	PFG-2A-U
026-39788-H	KB2V6-32-32	637FKD6R0270232000HF2	PFG-2A-U
026-39793-0	KB2VS-10-8	637FKD6R02702C8000RD2	PFG-2-NBR
026-39799-G	KB2VS-6-6	637FKD6R02702C8EAERD2	PFG-2-NBR
026-39804-0	KB2VS-8-6	637FKD6R02702CA000RD2	PFG-2-SI
026-39838-5	KB2VS-8-8	637FKD6R0270485000RD2	PFG-2-SI
026-39839-P	KB300/40	637FKD6R0270485EAERD2	PFG-2-SIE
026-39841-P	KB3134	637FKD6R0270CAN000RD2	PFG-2-SIE
026-39843-P	KB3437	637FKD6R0270CANEAERD2	PFG-2X4A-NBR
026-39855-0	KB3740	637FKD6R0270IBS000RD2	PFG-2X4A-NBR
026-39857-H	KB4043	637FKD6R0270PDP000HF2	PFG-2X4A-NBRE
026-39867-P	KB4346	637FKD6R0270PDP000RD2	PFG-2X4A-NBRE
026-39867-T	KB434C	637FKD6R027E000000RD2	PFG-2X4A-SI
026-39868-P	KB447-10-10	637FKD6R027E000EAERD2	PFG-2X4A-SI
026-39868-T	KB447-12-12	637FKD6R027E232000RD2	PFG-2X4A-SIE
026-39872-H	KB447-16-16	637FKD6R027ECAN000RD2	PFG-2X4A-SIE
026-39874-H	KB447-4-4	637FKD6R027EPC8SBTRD2	PFG-2X4A-U
026-39884-H	KB447-6-4	637FKD6R0430000000RD2	PFG-2X4A-U
026-39894-0	KB447-6-6	637FKD6R04302C8SBTRD2	PFG-2X4-NBR
026-39914-0	KB447-8-8	637FKD6R0430485000RD2	PFG-2X4-NBR
026-39923-0	KB454C	637FKD6R0430CAN000HF2	PFG-2X4-SI
026-39933-G	KB50/20	637FKD6R0430CAN000RD2	PFG-2X4-SI
026-39940-G	KB547-12-10	637FKD6R0430CANEAERD2	PFG-2X4-SIE
026-39963-H	KB547-12-12	637FKD6R0430PDP000RD2	PFG-2X4-SIE
026-39973-0	KB547-12-8	637FKD6R0430PDPSBTHF2	PFG-3.5A-CR
026-39982-0	KB547-16-16	637FKD6R0430PDPSBTRD2	PFG-3.5A-CR
026-41013-P	KB547-4-4	637FKD6R0470000000HF2	PFG-3.5A-FKM
026-41013-T	KB547-6-5	637FKD6R0470000000RD2	PFG-3.5A-FKM
026-41016-H	KB547-6-6	637FKD6R0470000EAERD2	PFG-3.5A-NBR
026-41053-H	KB547-8-6	637FKD6R0470000SBTRD2	PFG-3.5A-NBR
026-41059-H	KB547-8-8	637FKD6R0470232000RD2	PFG-3.5A-NBRE
026-41060-H	KB6002	637FKD6R04702C8000RD2	PFG-3.5A-NBRE
026-41061-H	KB6002	637FKD6R04702C8EAERD2	PFG-3.5A-SI
026-41073-0	KBR100	637FKD6R04702CA000RD2	PFG-3.5A-SI
026-41092-H	KBZ 10-SS	637FKD6R0470485000HF2	PFG-3.5A-SIE
026-41140-H	KBZ 12-SS	637FKD6R0470485000RD2	PFG-3.5A-SIE
026-41142-H	KBZ 6-SS	637FKD6R0470485EAERD2	PFG-3.5A-U
026-41143-H	KBZ 8-SS	637FKD6R0470CAN000HF2	PFG-3.5A-U
026-41155-H	KC047-20-12	637FKD6R0470CAN000RD2	PFG-3.5-NBR
026-41166-H	KC3052	637FKD6R0470CANEAEHF2	PFG-3.5-NBR
026-41171-P	KC3052	637FKD6R0470CANEAERD2	PFG-3.5-SI
026-41208-H	KC3052	637FKD6R0470CANSBTRD2	PFG-3.5-SI

026-41229-H	KC3052	637FKD6R0470PC8SBTHF2	PFG-3.5-SIE
026-41244-P	KC3061	637FKD6R0470PC8SBTRD2	PFG-3.5-SIE
026-41245-H	KC3061	637FKD6R0470PCASBTHF2	PFG-3.5X7A-NBR
026-41273-B	KC3102	637FKD6R0470PDP000HF2	PFG-3.5X7A-NBR
026-41273-S	KC3102	637FKD6R0470PDP000RD2	PFG-3.5X7A-NBRE
026-41273-V	KC3102	637FKD6R0470PDPSBTHF2	PFG-3.5X7A-NBRE
026-41274-P	KC3102	637FKD6R047E000000RD2	PFG-3.5X7A-SI
026-41275-V	KC3104	637FKD6R047E485EAERD2	PFG-3.5X7A-SI
026-41275-W	KC3104	637FKD6R047ECAN000RD2	PFG-3.5X7A-SIE
026-41320-H	KC3104	637FKD6R047ECANEAERD2	PFG-3.5X7A-SIE
026-41323-P	KC3104	637FKD6R047EPDP000RD2	PFG-3.5X7-NBR
026-41330-H	KC3106	637FKD6R047EPDP2CARD2	PFG-3.5X7-NBR
026-41343-P	KC3106	637FKD6R0630000000RD2	PFG-3.5X7-SI
026-41343-S	KC3106	637FKD6R0630PDPSBTRD2	PFG-3.5X7-SI
026-41343-V	KC3106	637FKD6R063ECAN000RD2	PFG-3.5X7-SIE
026-41395-H	KC3140	637FKD6R063EPDP000RD2	PFG-3.5X7-SIE
026-41424-0	KC3140	637FKD6R0670000000HF2	PFG-3.5X7-U
026-41465-C	KC3146	637FKD6R0670000000RD2	PFG-3.5X7-U
026-41465-P	KC3146	637FKD6R0670000EAERD2	PFG-30-NBR
026-41465-S	KC3152	637FKD6R0670232EAERD2	PFG-30-NBR
026-41465-V	KC3152	637FKD6R06702C8000RD2	PFG-30-NBRE
026-41465-W	KC3152	637FKD6R06702C8EAERD2	PFG-30-NBRE
026-41465-X	KC3152	637FKD6R06702C8SBTHF2	PFG-30-SI
026-41476-S	KC3158	637FKD6R06702C8SBTRD2	PFG-30-SI
026-41497-W	KC3158	637FKD6R06702CA000RD2	PFG-30-U
026-41524-P	KC3158	637FKD6R0670485000RD2	PFG-30-U
026-41555-H	KC3158	637FKD6R0670485EAERD2	PFG-35-NBR
026-41557-W	KC3250	637FKD6R0670CAN000HF2	PFG-35-NBR
026-41558-H	KC3250	637FKD6R0670CAN000RD2	PFG-35-SI
026-41565-H	KC3252	637FKD6R0670CANEAERD2	PFG-35-SI
026-41638-H	KC3252	637FKD6R0670CANSBTRD2	PFG-35-U
026-41722-H	KC3267	637FKD6R0670EA5000RD2	PFG-35-U
026-41743-P	KC3267	637FKD6R0670PDP000RD2	PFG-40-NBR
026-41769-B	KC3288	637FKD6R0670PDPSBTRD2	PFG-40-NBR
026-41769-V	KC3288	637FKD6R067E000000HF2	PFG-40-SI
026-41808-H	KC3288	637FKD6R067E000000RD2	PFG-40-SI
026-41834-U	KC3288	637FKD6R067E000EAERD2	PFG-40-U
026-41872-H	KC3310	637FKD6R067E232000RD2	PFG-40-U
026-41874-H	KC3310	637FKD6R067E232SBTRD2	PFG-50-NBR
026-41882-H	KC3315	637FKD6R067E2C8000HF2	PFG-50-NBR
026-41885-H	KC3315	637FKD6R067ECAN000RD2	PFG-50-SI
026-41888-0	KC3342	637FKD6R067EPCASBTRD2	PFG-50-SI
026-41921-H	KC3342	637FKD6R067EPDP000RD2BSX	PFG-50-SIE
026-41939-0	KC3356	637FKD6R067EPDP2CARD2	PFG-50-SIE
026-41983-P	KC3356	637FKD6R1030000000HF2	PFG-50-U
026-41998-H	KC3367	637FKD6R1030000000RD2	PFG-50-U
026-42002-H	KC3367	637FKD6R10302CA000SC2	PFG-5A-FKM
026-42020-T	KC3370	637FKD6R1030485000RD2	PFG-5A-FKM
026-42020-U	KC3370	637FKD6R1030EA5000RD2	PFG-5A-NBR
026-42103-H	KC3399	637FKD6R103E000000RD2	PFG-5A-NBR
026-42112-H	KC3399	637FKD6R1070000000RD2	PFG-5A-NBRE
026-42158-H	KC3399	637FKD6R1070000EAERD2	PFG-5A-NBRE
026-42176-0	KC3399	637FKD6R1070000SBTRD2	PFG-5A-SI

026-42176-5	KC3419	637FKD6R1070232000RD2	PFG-5A-SI
026-42277-H	KC3419	637FKD6R1070232EAERD2	PFG-5A-SIE
026-42292-H	KC3468	637FKD6R10702C8000RD2	PFG-5A-SIE
026-42295-T	KC3468	637FKD6R10702C8EAERD2	PFG-5A-U
026-42296-T	KC347-10-4	637FKD6R10702CA000HF2	PFG-5A-U
026-42336-H	KC347-10-5	637FKD6R10702CA000RD2	PFG-5-NBR
026-42343-H	KC347-10-6	637FKD6R1070485000RD2	PFG-5-NBR
026-42350-B	KC347-12-5	637FKD6R1070485EAERD2	PFG-5-NBRE
026-42372-H	KC347-12-6	637FKD6R1070CAN000RD2	PFG-5-NBRE
026-42388-0	KC347-15-8	637FKD6R1070CANEAERD2	PFG-5-SI
026-42395-H	KC347-18-10	637FKD6R1070CANSBTRD2923	PFG-5-SI
026-42441-T	KC347-22-12	637FKD6R1070PC8SBTRD2	PFG-5-SIE
026-42477-0	KC347-28-16	637FKD6R1070PCASBTHF2	PFG-5-SIE
026-42481-H	KC347-6-4	637FKD6R1070PDP000RD2	PFG-5-U
026-42538-0	KC347-8-4	637FKD6R1070PDPSBTRD2	PFG-5-U
026-42542-T	KC3492	637FKD6R107E000000RD2	PFG-60-CR
026-42557-0	KC3492	637FKD6R107E000000RD2BSX	PFG-60-CR
026-42560-0	KC35X-8-03N	637FKD6R107E000SBTRD2	PFG-60-NBR
026-42563-0	KC3AX-8-04N	637FKD6R107E2C8000RD2	PFG-60-NBR
026-42566-0	KC3EX-8-025	637FKD6R107E485000RD2	PFG-60-SI
026-42566-5	KC3EX-8-025N	637FKD6R107ECAN000RD2	PFG-60-SI
026-42569-0	KC3LX-8-03N	637FKD6R107EPCASBTRD2	PFG-60-SIE
026-42572-0	KC3LX-8-03NC	637FKD6R107EPDP000RD2	PFG-60-SIE
026-42575-0	KC3NX-10-04N	637FKD6R1670000000HF2	PFG-60-U
026-42580-0	KC3NX-10-05	637FKD6R1670000000RD2	PFG-60-U
026-42581-0	KC3NX-10-05N	637FKD6R1670000EAERD2	PFG-6A-FKM
026-42582-0	KC3NX-10-06	637FKD6R1670000SBTRD2	PFG-6A-FKM
026-42583-0	KC3NX-10-06N	637FKD6R1670232000RD2	PFG-6A-NBR
026-42584-0	KC3NX-12-06	637FKD6R1670CAN000HF2	PFG-6A-NBR
026-42585-0	KC3NX-15-08	637FKD6R1670CAN000RD2	PFG-6A-NBRE
026-42589-0	KC3NX-18-10	637FKD6R1670CAN000RD2S01	PFG-6A-NBRE
026-42590-0	KC3NX-18-10N	637FKD6R1670CANEAERD2	PFG-6A-SI
026-42591-0	KC3NX-22-12N	637FKD6R1670CANSBTRD2	PFG-6A-SI
026-42596-0	KC3NX-28-16N	637FKD6R1670PCASBTHF2	PFG-6A-SIE
026-42597-0	KC3NX-8-04	637FKD6R167E000000RD2	PFG-6A-SIE
026-42599-0	KC3NX-8-04N	637FKD6R167E232SBTRD2	PFG-6A-U
026-42602-0	KC3NX-8-04NC	637FKD6R167ECAN000RD2	PFG-6A-U
026-42608-0	KC3NX-8-04NC2	637FKD6R2270000000RD2	PFG-6-NBR
026-42684-0	KC3PX-10-02N	637FKD6R2270000SBTRD2	PFG-6-NBR
026-42717-H	KC3PX-10-03	637FKD6R2270232000RD2	PFG-6-SI
026-42724-0	KC3PX-10-03N	637FKD6R22702C8000RD2	PFG-6-SI
026-42794-0	KC3PX-10-04N	637FKD6R22702C8SBTRD2	PFG-6-SIE
026-42821-0	KC3PX-10-05	637FKD6R22702CA000RD2	PFG-6-SIE
026-42852-H	KC3PX-10-05N	637FKD6R2270485000RD2	PFG-80-CR
026-42863-0	KC3PX-10-06	637FKD6R2270CAN000RD2	PFG-80-CR
026-42866-H	KC3PX-10-06N	637FKD6R2270PC8SBTRD2	PFG-80-FKM
026-42911-H	KC3PX-12-06	637FKD6R2270PDP000RD2	PFG-80-FKM
026-42920-0	KC3PX-12-06N	637FKD6R2270PDPSBTRD2	PFG-80-NBR
026-42950-H	KC3PX-12-08N	637FKD6R227E000000HF2	PFG-80-NBR
026-42998-0	KC3PX-15-08	637FKD6R227E000000RD2	PFG-80-SI
026-43029-H	KC3PX-15-08N	637FKD6R227ECAN000RD2	PFG-80-SI
026-43044-H	KC3PX-18-10	637FKD6R227EPC8000HF2	PFG-80-U
026-43045-P	KC3PX-18-10N	637FKD6R227EPC8SBTRD2	PFG-80-U

026-43076-H	KC3PX-22-12	637FKD6R227EPCASBTRD2	PFG-80-Z
026-43227-U	KC3PX-22-12N	637FKD6R3070000000HF2	PFG-80-Z
026-43284-T	KC3PX-22-12NC2	637FKD6R3070000000RD2	PFG-8A-FKM
026-43329-0	KC3PX-22-12S	637FKD6R3070000EAERD2	PFG-8A-FKM
026-43332-0	KC3PX-28-16N	637FKD6R3070000SBTRD2	PFG-8A-NBR
026-43350-H	KC3PX-5-03NC2	637FKD6R3070232000RD2	PFG-8A-NBR
026-43368-H	KC3PX-6-02	637FKD6R30702C8000RD2	PFG-8A-NBRE
026-43378-0	KC3PX-6-02N	637FKD6R30702C8000RD2S01	PFG-8A-NBRE
026-43380-G	KC3PX-6-03	637FKD6R30702C8EAERD2	PFG-8A-SI
026-43399-P	KC3PX-6-03N	637FKD6R30702CA000RD2	PFG-8A-SI
026-43402-U	KC3PX-6-03NC	637FKD6R3070485000RD2	PFG-8A-SIE
026-43447-T	KC3PX-8-02N	637FKD6R3070CAN000RD2	PFG-8A-SIE
026-43448-0	KC3PX-8-03	637FKD6R3070CANEAERD2	PFG-8A-U
026-43556-P	KC3PX-8-03N	637FKD6R3070CANSBTRD2	PFG-8A-U
026-43556-T	KC3PX-8-03NC2	637FKD6R3070CC8SBTRD2Z01	PFG-8-NBR
026-43556-U	KC3PX-8-04	637FKD6R3070PC8EAEHF2	PFG-8-NBR
026-43581-H	KC3PX-8-04N	637FKD6R3070PC8SBTHF2	PFG-8-SI
026-43591-T	KC3PX-8-04NC2	637FKD6R3070PDP000RD2	PFG-8-SI
026-43659-0	KC3TX-8-03NC2	637FKD6R3070PDPSBTRD2	PFG-95-NBR
026-43662-P	KC4256	637FKD6R307E000SBTRD2	PFG-95-NBR
026-43663-P	KC4256	637FKD6R307E232SBTSC2	PFG-95-SI
026-43704-H	KC4303	637FKD6R307E2C8EAERD2	PFG-95-SI
026-43708-E	KC4303	637FKD6R307E485SBTRD2	PFG-95-U
026-43708-H	KC4304	637FKD6R307EPCASBTRD2	PFG-95-U
026-43716-0	KC4304	6380 04 00WP2	PFHH12525R
026-43716-5	KC4305	6380 04 00WP3	PFHW51110
026-43717-0	KC4305	6380 06 00WP2	PFL1CFM
026-43725-C	KC4306	6380 06 00WP3	PFL2CFM
026-43725-P	KC4306	6380 08 00WP2	PFL3CFM
026-43752-H	KC4306	6380 08 00WP3	PFOG-20-NBR
026-43759-P	KC4306	6380 10 00WP2	PFOG-20-NBR
026-43764-0	KC4307	6380 10 00WP3	PFOG-20-U
026-43765-0	KC4307	6380 12 00WP2	PFOG-20-U
026-43766-0	KC447-10-6	6380 12 00WP3	PFOG-25-NBR
026-43804-P	KC447-12-6	6382 04 00WP2	PFOG-25-NBR
026-43809-0	KC447-15-8	6382 04 00WP3	PFOG-25-U
026-43812-0	KC447-8-4	6382 04 06WP2	PFOG-25-U
026-43906-0	KC5020	6382 04 06WP3	PFOG-30-NBR
026-43920-H	KC5020	6382 06 00WP2	PFOG-30-NBR
026-43921-H	KC5035	6382 06 00WP3	PFOG-30-U
026-43967-0	KC5035	6382 06 04WP2	PFOG-30-U
026-46031-0	KC5036	6382 06 04WP3	PFOG-35-NBR
026-46031-5	KC5036	6382 06 08WP2	PFOG-35-NBR
026-46043-0	KC5036	6382 06 08WP3	PFOG-35-U
026-46063-U	KC5036	6382 08 00WP2	PFOG-35-U
026-46080-0	KC5125	6382 08 00WP3	PFOG-40-NBR
026-46175-H	KC5125	6382 08 10WP2	PFOG-40-NBR
026-46178-P	KC5126	6382 08 10WP3	PFOG-40-U
026-46186-H	KC5126	6382 08 60WP2	PFOG-40-U
026-46233-H	KC5127	6382 10 00WP2	PFOTF-20-NBR-G1
026-46236-0	KC5127	6382 10 00WP3	PFOTF-20-NBR-G1
026-46286-H	KC5128	6382 10 12WP2	PFOTF-20-U-G1
026-46311-H	KC5128	6382 10 12WP3	PFOTF-20-U-G1

026-46326-5	KC5132	6382 12 00WP2	PFOTF-25-NBR-G1
026-46327-5	KC5132	6382 12 00WP3	PFOTF-25-NBR-G1
026-46328-5	KC5133	6382 56 00WP2	PFOTF-25-NBR-G2
026-46329-5	KC5133	6382 56 00WP3	PFOTF-25-NBR-G2
026-46340-5	KC5134	6382 56 60WP2	PFOTF-25-U-G1
026-46358-0	KC5134	6382 56 60WP3	PFOTF-25-U-G1
026-46368-H	KC5135	6382 60 00WP2	PFOTF-25-U-G2
026-46517-H	KC5135	6382 60 00WP3	PFOTF-25-U-G2
026-46575-H	KC5139	6382 62 00WP2	PFOTF-30-NBR-G1
026-46621-0	KC5139	6382 62 00WP3	PFOTF-30-NBR-G1
026-46695-P	KC5140	6383 04 00WP2	PFOTF-30-NBR-G2
026-46700-H	KC5140	6383 04 00WP3	PFOTF-30-NBR-G2
026-46701-H	KC5141	6383 06 00WP2	PFOTF-30-U-G1
026-46711-H	KC5141	6383 06 00WP3	PFOTF-30-U-G1
026-46728-0L	KC5142	6383 08 00WP2	PFOTF-30-U-G2
026-46805-H	KC5142	6383 08 00WP3	PFOTF-30-U-G2
026-46841-0	KC5172	6383 10 00WP2	PFOTF-35-NBR-G1
026-46844-H	KC5172	6383 10 00WP3	PFOTF-35-NBR-G1
026-46848-H	KC5224	6388 04 00WP2	PFOTF-35-NBR-G2
026-46891-H	KC5224	6388 04 00WP3	PFOTF-35-NBR-G2
026-46915-H	KC5226	6388 06 00WP2	PFOTF-35-U-G1
026-46980-P	KC5226	6388 06 00WP3	PFOTF-35-U-G1
026-46989-0	KC5227	6388 08 00WP2	PFOTF-35-U-G2
026-46989-5	KC5227	6388 08 00WP3	PFOTF-35-U-G2
026-47012-0	KC5240	6388 10 00WP2	PFOTF-40-NBR-G1
026-47049-0	KC5240	6388 10 00WP3	PFOTF-40-NBR-G1
026-47068-H	KC547-10-5	6388 56 00WP2	PFOTF-40-NBR-G2
026-47130-P	KC547-12-6	6388 56 00WP3	PFOTF-40-NBR-G2
026-47143-0	KC547-15-8	6388 60 00WP2	PFOTF-40-U-G1
026-47148-H	KC547-18-10	6388 60 00WP3	PFOTF-40-U-G1
026-47187-C	KC547-6-4	6388 62 00WP2	PFOTF-40-U-G2
026-47187-P	KC547-8-4	6388 62 00WP3	PFOTF-40-U-G2
026-47187-S	KC5NX-8-04	638A013A0STOCAN000RD2	PFOTM-20-NBR-G1
026-47188-C	KC6LX-12-05	638A013F0STO000000RD2	PFOTM-20-NBR-G1
026-47188-P	KC6NX-10-04	638A013F0STO000000RM1	PFOTM-20-U-G1
026-47189-P	KC6NX-25-12	638A013F0STO232000RD2	PFOTM-20-U-G1
026-47193-H	KC6NX-30-16	638A013F0STO2C8000RD2	PFOTM-25-NBR-G1
026-47200-H	KC7018	638A013F0STO485000RD2	PFOTM-25-NBR-G1
026-47229-H	KC7018	638A013F0STOCAN000RD2	PFOTM-25-NBR-G2
026-47236-0	KC7021	638A013F0STOCANEAERD2	PFOTM-25-NBR-G2
026-47295-P	KC7021	638A013F0STOPC8EAERD2	PFOTM-25-U-G1
026-47461-H	KC7038	638A013F0STOPCA000RM1	PFOTM-25-U-G1
026-47516-H	KC7038	638A013F0STOPDN000RD2	PFOTM-25-U-G2
026-47535-0	KC7040	638A013F0STOPDN000RM1	PFOTM-25-U-G2
026-47583-C	KC7040	638A023A0STO000000RM1	PFOTM-30-NBR-G1
026-47583-P	KC7067	638A023A0STO485000RD2	PFOTM-30-NBR-G1
026-47637-C	KC7067	638A023A0STOCAN000RM1	PFOTM-30-NBR-G2
026-47637-P	KC7074	638A023A0STOCC8000RD2	PFOTM-30-NBR-G2
026-47651-P	KC7074	638A023A0STOPCA000RM1	PFOTM-30-U-G1
026-47658-HL	KC7084	638A023F0STO000000RD2	PFOTM-30-U-G1
026-47669-0	KC7084	638A023F0STO000000RM1	PFOTM-30-U-G2
026-47684-H	KC7085	638A023F0STO000EAERM1	PFOTM-30-U-G2
026-47700-H	KC7085	638A023F0STO232000RD2	PFOTM-35-NBR-G1

026-47793-0	KC7086	638A023F0STO232000RM1	PFOTM-35-NBR-G1
026-47811-G	KC7086	638A023F0STO2C8000HF2	PFOTM-35-NBR-G2
026-47839-H	KC7087	638A023F0STO2C8000HM1	PFOTM-35-NBR-G2
026-47925-0	KC7087	638A023F0STO2C8000RM1	PFOTM-35-U-G1
026-47931-P	KC7089	638A023F0STO2C8EAEHF2	PFOTM-35-U-G1
026-47987-T	KC7089	638A023F0STO2CA000HF2	PFOTM-35-U-G2
026-47988-H	KC7101	638A023F0STO2CA000RD2	PFOTM-35-U-G2
026-47989-0	KC7101	638A023F0STO2CA000RM1	PFOTM-40-NBR-G1
026-48000-5	KC7120	638A023F0STO485000RD2	PFOTM-40-NBR-G1
026-48035-H	KC7120	638A023F0STO485000RM1	PFOTM-40-NBR-G2
026-48037-H	KC7121	638A023F0STO485EAERM1	PFOTM-40-NBR-G2
026-48038-H	KC7121	638A023F0STOCAN000HF2	PFOTM-40-U-G1
026-48039-H	KC7122	638A023F0STOCAN000RD2	PFOTM-40-U-G1
026-48063-0	KC7122	638A023F0STOCAN000RD2E01	PFOTM-40-U-G2
026-48063-5	KC7123	638A023F0STOCAN000RM1	PFOTM-40-U-G2
026-48152-T	KC7123	638A023F0STOCANEAERM1	PFOTYS3030NBR
026-48163-T	KC7124	638A023F0STODEV000RM1	PFOTYS3030NBR
026-48239-0	KC7124	638A023F0STOEA5000RD2	PFT-10B-BLK-250
026-48241-0	KC7140	638A023F0STOPC8000RM1	PFT-4A-BLK-1000
026-48350-0	KC7140	638A023F0STOPCA000HM1	PFT-6B-BLK-500
026-48421-P	KC7141	638A023F0STOPCA000RM1	PFT-8B-BLK-100
026-48435-0	KC7141	638A023F0STOPDN000HM1	PFT-8B-BLK-500
026-48452-0	KC7142	638A023F0STOPDN000RD2	PFTF-10A-NBR-G1
026-48474-H	KC7142	638A023F0STOPDN000RG1	PFTF-10A-NBR-G1
026-48522-H	KC7142	638A023F0STOPDN000RM1	PFTF-10A-SI-G1
026-48538-P	KC7142	638A023F0STOPDN000SM1	PFTF-10A-SI-G1
026-48544-0	KC7143	638A043A0STO000000HF2	PFTF-10A-U-G1
026-48550-H	KC7143	638A043A0STOCAN000HF2	PFTF-10A-U-G1
026-48613-0	KC7158	638A043A0STOPC8000RM1	PFTF-120-CR-G4
026-48627-0	KC7158	638A043F0STO000000HF2	PFTF-120-CR-G4
026-48632-H	KC7160	638A043F0STO000000RD2	PFTF-120-NBR-G4
026-48647-H	KC7160	638A043F0STO000000RM1	PFTF-120-NBR-G4
026-48658-H	KC7161	638A043F0STO000EAERD2	PFTF-120-SI-G4
026-48664-0	KC7161	638A043F0STO232000RD2	PFTF-120-SI-G4
026-48668-H	KC7162	638A043F0STO2C8000HM1	PFTF-120-U-G4
026-48675-P	KC7162	638A043F0STO2C8000RD2	PFTF-120-U-G4
026-48714-P	KC7163	638A043F0STO2C8000RM1	PFTF-150-NBR-G4
026-48811-P	KC7163	638A043F0STO2C8EAERD2	PFTF-150-NBR-G4
026-48838-P	KC7166	638A043F0STO2CA000RD2	PFTF-150-SI-G4
026-48922-P	KC7166	638A043F0STO2CA000RM1	PFTF-150-SI-G4
026-48958-0	KC7171	638A043F0STO485000RM1	PFTF-150-U-G4
026-48961-0	KC7171	638A043F0STO485EAERD2	PFTF-150-U-G4
026-48999-P	KC7173	638A043F0STOCAN000RD2	PFTF-15A-NBR-G1
026-52008-0	KC7173	638A043F0STOCAN000RM1	PFTF-15A-NBR-G1
026-52070-0	KC7174	638A043F0STOIBS2CARM1	PFTF-15A-SI-G1
026-52089-H	KC7174	638A043F0STOPC8000RM1	PFTF-15A-SI-G1
026-52119-H	KC7194	638A043F0STOPCA000RM1	PFTF-15A-U-G1
026-52165-H	KC7194	638A043F0STOPDN000HF2	PFTF-15A-U-G1
026-52252-0	KC7195	638A043F0STOPDN000RD2	PFTF-200-CR-G4
026-52264-H	KC7195	638A043F0STOPDN000RM1	PFTF-200-CR-G4
026-52270-0	KC7197	638A063A0STO000000RD2	PFTF-200-NBR-G4
026-52283-H	KC7197	638A063A0STO000000RD2S00	PFTF-200-NBR-G4
026-52288-0	KC7199	638A063A0STO485000RD2	PFTF-200-SI-G4

026-52311-0	KC7199	638A063A0STO485000RM1	PFTF-200-SI-G4
026-52357-0	KC7201	638A063A0STOPDN000RD2	PFTF-200-U-G4
026-52361-0	KC7201	638A063F0STO000000RD2	PFTF-200-U-G4
026-52394-H	KC7202	638A063F0STO000000RM1	PFTF-20B-CR-G1
026-52541-H	KC7202	638A063F0STO000EAERD2	PFTF-20B-CR-G1
026-52551-T	KC7270	638A063F0STO232000RD2	PFTF-20B-CR-G2
026-52725-0	KC7270	638A063F0STO232000RM1	PFTF-20B-CR-G2
026-52726-H	KC7271	638A063F0STO2C8000RD2	PFTF-20B-NBR-G1
026-52782-H	KC7271	638A063F0STO2C8000RM1	PFTF-20B-NBR-G1
026-52788-0	KC8026	638A063F0STO2C8EAERD2	PFTF-20B-NBR-G2
026-52788-5	KC8026	638A063F0STO2CA000RD2	PFTF-20B-NBR-G2
026-52802-0	KC8046	638A063F0STO2CA000RM1	PFTF-20B-SI-G1
026-52880-0	KC8046	638A063F0STO485000HM1	PFTF-20B-SI-G1
026-52882-P	KC8047	638A063F0STO485000RD2	PFTF-20B-SI-G2
026-52900-0	KC8047	638A063F0STO485000RM1	PFTF-20B-SI-G2
026-52901-H	KC8051	638A063F0STO485EAERD2	PFTF-20B-U-G1
026-52905-H	KC8051	638A063F0STOCAN000EM1	PFTF-20B-U-G1
026-52941-H	KC8052	638A063F0STOCAN000EM1Z01	PFTF-20B-U-G2
026-52986-0	KC8052	638A063F0STOCAN000HF2	PFTF-20B-U-G2
026-53039-P	KC8053	638A063F0STOCAN000HM1Z01	PFTF-25-NBR-G1
026-532212	KC8053	638A063F0STOCAN000RD2	PFTF-25-NBR-G1
026-53223-H	KC8054	638A063F0STOCAN000RM1	PFTF-25-NBR-G2
026-53240-0	KC8054	638A063F0STOCAN000RM1Z01	PFTF-25-NBR-G2
026-53282-H	KC8055	638A063F0STOCAN000SC2	PFTF-25-SI-G1
026-53342-0	KC8055	638A063F0STOCAN000SM1Z01	PFTF-25-SI-G1
026-53461-H	KC8133	638A063F0STOCANEAERD2	PFTF-25-SI-G2
026-53463-0	KC8133	638A063F0STOCANEAERM1	PFTF-25-SI-G2
026-53474-H	KC8134	638A063F0STOCC8000RG1Z01	PFTF-25-U-G1
026-53492-H	KC8134	638A063F0STOCC8000RM1	PFTF-25-U-G1
026-53493-P	KC8135	638A063F0STOCC8000RM1Z01	PFTF-25-U-G2
026-53537-0	KC8135	638A063F0STOCC8EAERM1	PFTF-25-U-G2
026-53540-U	KC8136	638A063F0STODEV000RM1	PFTF-30-NBR-G1
026-53547-0	KC8136	638A063F0STOEA5000RD2	PFTF-30-NBR-G1
026-53548-0	KC8227	638A063F0STOPC8000RM1	PFTF-30-NBR-G2
026-53549-0	KC8227	638A063F0STOPC8EAEHM1	PFTF-30-NBR-G2
026-53550-0	KC8228	638A063F0STOPCA000RM1	PFTF-30-SI-G1
026-53552-0	KC8228	638A063F0STOPDN000HF2	PFTF-30-SI-G1
026-53553-0	KC8229	638A063F0STOPDN000HF2BSX	PFTF-30-SI-G2
026-53554-0	KC8229	638A063F0STOPDN000RD2	PFTF-30-SI-G2
026-53555-0	KC8230	638A063F0STOPDN000RM1	PFTF-30-U-G1
026-53556-0	KC8230	638A063F0STOPDN000SM1	PFTF-30-U-G1
026-53578-0	KC8231	638A063F0STOPDNEAERM1	PFTF-30-U-G2
026-53580-0	KC8231	638A073F0STOCAN000RM1Z01	PFTF-30-U-G2
026-53643-0	KC8231	638A073F0STOCC8000RM1Z01	PFTF-35-NBR-G1
026-53645-0	KC8231	638B033A0STO485000RD2	PFTF-35-NBR-G1
026-53645-5	KC8232	638B033F0STO000000RD2	PFTF-35-NBR-G2
026-53655-0	KC8232	638B033F0STO2C8000RD2	PFTF-35-NBR-G2
026-53704-0	KC8233	638B036F0STO000000HM1	PFTF-35-SI-G1
026-53788-H	KC8233	638B036F0STO000000RD2	PFTF-35-SI-G1
026-53790-0	KC8255	638B036F0STO000000RM1	PFTF-35-SI-G2
026-53959-0	KC8255	638B036F0STO232000RD2	PFTF-35-SI-G2
026-53965-H	KC8307	638B036F0STOCAN000RD2	PFTF-35-U-G1
026-53977-P	KC8307	638B036F0STOCC8000HF2	PFTF-35-U-G1

026-54006-P	KC8334	638B036F0STOPCA000RM1	PFTF-35-U-G2
026-54015-P	KC8334	638B036F0STOPDN000HF2	PFTF-35-U-G2
026-54042-A	KC8360	638B036F0STOPDN000RM1	PFTF-40-NBR-G1
026-54042-G	KC8360	638B037F0STO000000RD2	PFTF-40-NBR-G1
026-54042-H	KC8896	638B037F0STOPDN000RD2	PFTF-40-NBR-G2
026-54042-J	KC8896	638B053F0STO000000RD2	PFTF-40-NBR-G2
026-54042-K	KC947-10-4	638B056A0STO000000RD2	PFTF-40-SI-G1
026-54050-H	KC947-10-4C	638B056A0STO000000RM1	PFTF-40-SI-G1
026-54052-H	KC947-10-5	638B056A0STOCAN000RM1	PFTF-40-SI-G2
026-54075-0	KC947-10-6	638B056F0STO000000RD2	PFTF-40-SI-G2
026-54076-A	KC947-12-4	638B056F0STO000000RM1	PFTF-40-U-G1
026-54076-G	KC947-12-5	638B056F0STO232000RD2	PFTF-40-U-G1
026-54076-H	KC947-12-5C	638B056F0STO2C8000HM1	PFTF-40-U-G2
026-54076-J	KC947-12-6	638B056F0STO485000RD2	PFTF-40-U-G2
026-54082-A	KC947-12-6C	638B056F0STO485000RM1	PFTF-50-NBR-G1
026-54082-G	KC947-14-6	638B056F0STO485EAERM1	PFTF-50-NBR-G1
026-54082-H	KC947-14-6C	638B056F0STOCAN000RD2	PFTF-50-NBR-G2
026-54085-A	KC947-14-8	638B056F0STOCANEAERD2	PFTF-50-NBR-G2
026-54085-G	KC947-16-10	638B056F0STOPC8000RM1	PFTF-50-SI-G1
026-54085-H	KC947-16-10C	638B056F0STOPCA000HM1	PFTF-50-SI-G1
026-54086-H	KC947-16-6	638B056F0STOPCA000RM1	PFTF-50-SI-G2
026-54093-G	KC947-16-8	638B056F0STOPDN000HF2	PFTF-50-SI-G2
026-54093-H	KC947-16-8C	638B056F0STOPDN000HM1	PFTF-50-U-G1
026-54094-A	KC947-20-10	638B056F0STOPDN000RD2	PFTF-50-U-G1
026-54094-G	KC947-20-10C	638B056F0STOPDN000RM1	PFTF-50-U-G2
026-54094-H	KC947-20-12	638B057F0STOPDN000RD2	PFTF-50-U-G2
026-54097-A	KC947-20-12C	638B057F0STOPDNEAERM1	PFTF-5A-NBR-G1
026-54097-G	KC947-25-12	638B083F0STO000000RD2	PFTF-5A-NBR-G1
026-54097-H	KC947-25-12C	638B083F0STOCAN000RD2	PFTF-5A-SI-G1
026-54100-A	KC947-25-16	638B086A0STO000000RD2	PFTF-5A-SI-G1
026-54100-D	KC947-25-16C	638B086A0STO2C8000RD2	PFTF-5A-U-G1
026-54100-G	KC947-30-16	638B086A0STO485000RM1	PFTF-5A-U-G1
026-54100-H	KC947-30-16C	638B086F0STO000000HM1	PFTF-60-NBR-G2
026-54102-H	KC947-6-4	638B086F0STO000000RD2	PFTF-60-NBR-G2
026-54103-G	KC947-6-4C	638B086F0STO000000RM1	PFTF-60-SI-G2
026-54103-H	KC947-8-4	638B086F0STO485000RM1	PFTF-60-SI-G2
026-54106-H	KC947-8-4C	638B086F0STOCAN000HF2	PFTF-60-U-G2
026-54108-H	KC98X-10-04	638B086F0STOCAN000RD2	PFTF-60-U-G2
026-54109-H	KC9EX-8-012	638B086F0STOCANEAEHM1BSX	PFTF-6A-NBR-G1
026-54111-A	KC9EX-8-012N	638B086F0STOPC8000RD2	PFTF-6A-NBR-G1
026-54111-D	KC9EX-8-025	638B103F0STO000000RD2	PFTF-6A-SI-G1
026-54111-G	KC9EX-8-025-6V	638B103F0STO485EAERM1	PFTF-6A-SI-G1
026-54111-H	KC9EX-8-025N	638B103F0STOCAN000EM1Z01	PFTF-6A-U-G1
026-54111-J	KC9KX-25-12	638B106A0STO485000RM1	PFTF-6A-U-G1
026-54111-K	KC9LX-14-06	638B106A0STOPCA000RM1	PFTF-80-NBR-G2
026-54112-A	KC9LX-16-06	638B106A0STOPDN000RM1	PFTF-80-NBR-G2
026-54112-D	KC9LX-16-08	638B106F0STO000000RD2	PFTF-80-SI-G2
026-54112-G	KC9LX-16-08N	638B106F0STO000000RM1	PFTF-80-SI-G2
026-54112-H	KC9LX-30-16	638B106F0STO232000RD2	PFTF-80-U-G2
026-54113-A	KC9MX-16-08	638B106F0STO2CA000RD2	PFTF-80-U-G2
026-54113-D	KC9MX-16-08N	638B106F0STO485000RD2	PFTF-8A-NBR-G1
026-54113-G	KC9NX-10-04	638B106F0STO485000RM1	PFTF-8A-NBR-G1
026-54113-H	KC9NX-10-04-6V	638B106F0STOCAN000RD2	PFTF-8A-SI-G1

026-54113-J	KC9NX-10-04N	638B106F0STOCAN000RM1Z01	PFTF-8A-SI-G1
026-54113-K	KC9NX-12-05	638B106F0STOCANEAERD2	PFTF-8A-U-G1
026-54115-H	KC9NX-12-05-6V	638B106F0STOCC8000RM1	PFTF-8A-U-G1
026-54120-H	KC9NX-12-05N	638B106F0STOCC8000RM1Z01	PFTF-95-NBR-G2
026-54121-G	KC9NX-12-06	638B106F0STOEA5000RD2	PFTF-95-NBR-G2
026-54122-A	KC9NX-12-06-6V	638B106F0STOPC8000RM1	PFTF-95-SI-G2
026-54122-H	KC9NX-12-06N	638B106F0STOPCA000HM1	PFTF-95-SI-G2
026-54126-H	KC9NX-14-06	638B106F0STOPCA000RM1	PFTF-95-U-G2
026-54128-A	KC9NX-16-05NC	638B106F0STOPDN000HM1	PFTF-95-U-G2
026-54128-H	KC9NX-16-08	638B106F0STOPDN000RM1	PFTK-10A-NBR
026-54129-D	KC9NX-16-08-6V	638B106F0STOPDN2CAHF2	PFTK-10A-NBR
026-54129-G	KC9NX-16-08N	638B107A0STOPDN000RM1	PFTK-30-NBR
026-54129-H	KC9NX-20-10	638B107F0STO2C8000RD2	PFTK-30-NBR
026-54131-H	KC9NX-20-10-6V	638B153F0STO000000RD2	PFTK-50-NBR
026-54138-D	KC9NX-20-10N	638B153F0STOCAN000RD2	PFTK-50-NBR
026-54138-G	KC9NX-25-12	638B156A0STO000000RD2	PFTK-60-SI-G1
026-54138-H	KC9NX-25-12-6V	638B156F0STO000000RD2	PFTK-60-SI-G1
026-54141-H	KC9NX-25-12N	638B156F0STO000000SC2	PFTM-10A-NBRE-G1
026-54142-H	KC9NX-30-16	638B156F0STO232000RD2	PFTM-10A-NBRE-G1
026-54143-H	KC9NX-30-16-6V	638B156F0STO2CAEAERM1	PFTM-10A-NBR-G1
026-54144-H	KC9NX-30-16N	638B156F0STOCAN000RD2	PFTM-10A-NBR-G1
026-54147-H	KC9NX-38-20	638B156F0STOCANEAERM1	PFTM-10A-NBR-M5
026-54149-H	KC9NX-38-20-6V	638B156F0STOCC8000HF2	PFTM-10A-NBR-M5
026-54149-K	KC9NX-38-20N	638B156F0STOCC8000HM1Z01	PFTM-10A-SI-G1
026-54150-A	KC9NX-8-025	638B156F0STOCC8000RM1Z01	PFTM-10A-SI-G1
026-54150-D	KC9NX-8-04	638B156F0STOCC8EAERM1	PFTM-10A-SI-M5
026-54150-G	KC9NX-8-04-6V	638B156F0STOPC8000HM1	PFTM-10A-SI-M5
026-54150-H	KC9NX-8-04NC	638B156F0STOPC8000RD2	PFTM-10A-U-G1
026-54150-K	KC9PX-10-04	638B156F0STOPC8EAERM1	PFTM-10A-U-G1
026-54154-H	KC9PX-10-04-6V	638B156F0STOPCA000RM1	PFTM-10A-U-M5
026-54155-A	KC9PX-12-05	638B156F0STOPDN000HF2	PFTM-10A-U-M5
026-54155-G	KC9PX-12-05-6V	638B156F0STOPDN000RD2	PFTM-15A-NBR-G1
026-54155-H	KC9PX-12-05N	638B156F0STOPDN000RM1	PFTM-15A-NBR-G1
026-54156-H	KC9PX-12-06	638B157A0STOPDN000RM1	PFTM-15A-NBR-M5
026-54157-H	KC9PX-16-08	639FIL	PFTM-15A-NBR-M5
026-54158-H	KC9PX-16-08-6V	639FIL	PFTM-15A-SI-G1
026-54159-H	KC9PX-20-10-6V	63AC-3	PFTM-15A-SI-G1
026-54160-H	KC9PX-25-12-6V	63-P-16	PFTM-15A-SI-M5
026-54161-H	KC9PX-30-16-6V	6-4 B2HF-B	PFTM-15A-SI-M5
026-54162-H	KC9PX-6-03	6-4 B2HF-SS	PFTM-15A-U-G1
026-54163-H	KC9PX-8-03	6-4 C5OLO-S	PFTM-15A-U-G1
026-54164-H	KC9PX-8-03N	6-4 C5OLO-S BP	PFTM-15A-U-M5
026-54165-D	KC9PX-8-04	6-4 C5OX-S	PFTM-15A-U-M5
026-54165-G	KC9PX-8-04N	6-4 CBMP7-SS	PFTM-20B-CR-G1
026-54165-H	KC9TX-16-025	6-4 CBZ-SS	PFTM-20B-CR-G1
026-54167-G	KC9V4-16-10	6-4 DBZ-SS	PFTM-20B-CR-G2
026-54167-H	KC9V4-20-10	6-4 ELZ-SS	PFTM-20B-CR-G2
026-54169-H	KC9V4-20-12	6-4 ETX-S	PFTM-20B-NBR-G1
026-54170-D	KC9V4-20-12C	6-4 F5OG5-S	PFTM-20B-NBR-G1
026-54170-H	KC9V4-25-12	6-4 F5OLO-S	PFTM-20B-NBR-G2
026-54171-H	KC9V4-25-12C	6-4 F5OX-S	PFTM-20B-NBR-G2
026-54182-D	KC9V4-25-16	6-4 FBMP7-SS	PFTM-20B-SI-G1
026-54182-G	KC9V4-30-12	6-4 FBZ-B	PFTM-20B-SI-G1

026-54182-H	KC9V4-30-16	6-4 FBZ-SS	PFTM-20B-SI-G2
026-54182-J	KC9V4-30-16C	6-4 FH2BZ-SS	PFTM-20B-SI-G2
026-54182-K	KC9V4-30-20	6-4 FH4BZ-SS	PFTM-20B-U-G1
026-54184-A	KC9V4-38-16	6-4 FHC-B	PFTM-20B-U-G1
026-54184-D	KC9V4-38-20	6-4 FHC-SS	PFTM-20B-U-G2
026-54184-G	KC9V4-38-20C	6-4 FHC-SSHP	PFTM-20B-U-G2
026-54184-H	KC9V4-38-24	6-4 GBMP7-SS	PFTM-25-NBR-G1
026-54184-K	KC9V6-30-20	6-4 GBZ-B	PFTM-25-NBR-G1
026-54185-A	KC9V6-38-20	6-4 GBZ-SS	PFTM-25-NBR-G2
026-54185-D	KC9V6-38-20C	6-4 GH2BZ-SS	PFTM-25-NBR-G2
026-54185-G	KC9V6-38-24	6-4 HBZ-SS	PFTM-25-SI-G1
026-54185-H	KC9VS-10-4	6-4 HLO-S	PFTM-25-SI-G1
026-54185-J	KC9VS-12-6	6-4 HTX-S	PFTM-25-SI-G2
026-54185-K	KC9VS-14-6	6-4 LOHL6-S	PFTM-25-SI-G2
026-54189-D	KC9VS-16-8	6-4 MHN-B	PFTM-25-U-G1
026-54189-G	KC9VS-8-4	6-4 MHNR-SS	PFTM-25-U-G1
026-54189-H	KC9ZX-16-08N	6-4 MHN-SS	PFTM-25-U-G2
026-54191-H	KC9ZX-25-12	6-4 MHN-SSHP	PFTM-25-U-G2
026-54193-H	KC9ZX-25-12N	6-4 RA-625	PFTM-2A-NBR-M5
026-54194-H	KCA47-10-4	6-4 RA-B	PFTM-2A-NBR-M5
026-54198-H	KCA47-10-4C	6-4 RA-SS	PFTM-2A-SI-M5
026-54200-H	KCA47-10-5	6-4 RA-SSHP	PFTM-2A-SI-M5
026-54203-A	KCA47-10-5C	6-4 RB-625	PFTM-2A-U-M5
026-54203-D	KCA47-10-5V	6-4 RB-B	PFTM-2A-U-M5
026-54203-G	KCA47-10-6	6-4 RB-HC	PFTM-3.5A-NBR-M5
026-54203-H	KCA47-10-6C	6-4 RBK-SS	PFTM-3.5A-NBR-M5
026-54203-K	KCA47-12-4	6-4 RB-S	PFTM-3.5A-SI-M5
026-54205-H	KCA47-12-5	6-4 RB-SS	PFTM-3.5A-SI-M5
026-54207-H	KCA47-12-6	6-4 RB-SSHP	PFTM-3.5A-U-M5
026-54208-G	KCA47-12-6C	6-4 SE-SS	PFTM-3.5A-U-M5
026-54208-H	KCA47-12-8	6-4 T2HF-SS	PFTM-30-NBR-G1
026-54211-H	KCA47-12-8C	6-4 T2HG-SS	PFTM-30-NBR-G1
026-54213-A	KCA47-15-10	6-4 TL-S	PFTM-30-NBR-G2
026-54213-H	KCA47-15-6	6-4 TRBU-S	PFTM-30-NBR-G2
026-54215-G	KCA47-15-6C	6-4 TRBZ-B	PFTM-30-SI-G1
026-54215-H	KCA47-15-8	6-4 TRBZ-SS	PFTM-30-SI-G1
026-54215-J	KCA47-15-8C	6-4 TRLON-S	PFTM-30-SI-G2
026-54220-G	KCA47-18-10	6-4 TRTX-B	PFTM-30-SI-G2
026-54220-H	KCA47-18-10C	6-4 TRTX-S	PFTM-30-U-G1
026-54220-J	KCA47-18-12	6-4 TRTX-SS	PFTM-30-U-G1
026-54224-A	KCA47-18-8	6-4 TRW-SS	PFTM-30-U-G2
026-54224-H	KCA47-18-8C	6-4 V5OLO-S	PFTM-30-U-G2
026-54226-A	KCA47-22-10	6-4 VBZ-SS	PFTM-35-NBR-G1
026-54226-G	KCA47-22-12	6-4 X42HBMP7-SS	PFTM-35-NBR-G1
026-54226-H	KCA47-22-12C	6-4 ZHBF5-SS	PFTM-35-NBR-G2
026-54227-H	KCA47-22-16	6-400	PFTM-35-NBR-G2
026-54231-H	KCA47-28-12	6400-63-00500-3000-000000	PFTM-35-SI-G1
026-54233-G	KCA47-28-16	6400-63-00500-3000-000000	PFTM-35-SI-G1
026-54233-H	KCA47-28-16C	6400-63-01613-0000-000000	PFTM-35-SI-G2
026-54235-H	KCA47-6-4	6400-63-01613-0000-000000	PFTM-35-SI-G2
026-54237-H	KCA47-6-4C	6400-63-03150-0000-000000	PFTM-35-U-G1
026-54239-H	KCA47-8-4	6400-63-03150-0000-000000	PFTM-35-U-G1
026-54240-G	KCA47-8-4C	6400-63-04550-0000-011100	PFTM-35-U-G2

026-54240-H	KCA47-8-5	6400-63-04550-0000-011100	PFTM-35-U-G2
026-54240-K	KCAEX-6-012	6401 04 10	PFTM-40-NBR-G1
026-54244-A	KCAEX-6-025	6401 07 13	PFTM-40-NBR-G1
026-54244-G	KCAEX-8-012	6401 10 17	PFTM-40-NBR-G2
026-54244-H	KCAN-V-630-UL-UR	6401 13 21	PFTM-40-NBR-G2
026-54244-J	KCANX-10-05	6402 04 10	PFTM-40-SI-G1
026-54244-K	KCANX-28-16	6402 07 13	PFTM-40-SI-G1
026-54248-A	KCANX-8-04	6402 10 17	PFTM-40-SI-G2
026-54259-H	KCAPX-10-04	6402 13 21	PFTM-40-SI-G2
026-54347-H	KCAPX-10-05	6402 13 21 30	PFTM-40-U-G1
026-54348-H	KCAPX-10-05-6V	6402 20 27	PFTM-40-U-G1
026-54350-H	KCAPX-10-05N	6402 23 34	PFTM-40-U-G2
026-54351-H	KCAPX-12-05	6405W	PFTM-40-U-G2
026-54353-H	KCAPX-12-05N	6439E	PFTM-50-NBR-G1
026-54355-H	KCAPX-12-06	645R10	PFTM-50-NBR-G1
026-54358-G	KCAPX-12-06-6V	645R10MTC	PFTM-50-NBR-G2
026-54358-H	KCAPX-12-06N	645R30	PFTM-50-NBR-G2
026-54361-A	KCAPX-15-08	645R30MTC	PFTM-50-SI-G1
026-54361-G	KCAPX-15-08-6V	6-4-6 JBZ-SS	PFTM-50-SI-G1
026-54361-H	KCAPX-18-10	6-4-6 JLZ-SS	PFTM-50-SI-G2
026-54363-H	KCAPX-18-10-6V	6-4-6 MBZ-SS	PFTM-50-SI-G2
026-54369-G	KCAPX-22-12	6-4-6 RBZ-B	PFTM-50-U-G1
026-54369-H	KCAPX-22-12-6V	6-4-6 RBZ-SS	PFTM-50-U-G1
026-54371-H	KCAPX-22-12N	6-4-6JMTXSS	PFTM-50-U-G2
026-54375-G	KCAPX-28-16-6V	6490E	PFTM-50-U-G2
026-54375-H	KCAPX-6-03	64AP1CF	PFTM-5A-NBR-G1
026-54378-G	KCAPX-6-03N	6-4C5OMLOSS	PFTM-5A-NBR-G1
026-54378-H	KCAPX-6-03NC2	6-4C5OMXSS	PFTM-5A-NBR-M5
026-54380-H	KCAPX-6-04	64CPM1CF	PFTM-5A-NBR-M5
026-54381-G	KCAPX-8-04	6-4F3T4S	PFTM-5A-SI-G1
026-54381-H	KCAPX-8-04-6V	6-4F5OMLOS	PFTM-5A-SI-G1
026-54383-G	KCAPX-8-04N	6-4F5OMLOSS	PFTM-5A-SI-M5
026-54383-H	KCAPX-8-04NC	6-4F5OMXSS	PFTM-5A-SI-M5
026-54385-A	KCAV4-28-16	6-4F6MK4S	PFTM-5A-U-G1
026-54385-G	KCAV4-35-20	6-4F6MK4SS	PFTM-5A-U-G1
026-54385-H	KCAV4-42-24	6-4GC GBZ-SS	PFTM-5A-U-M5
026-54389-H	KCAV6-42-24	6-4H6MK4S	PFTM-5A-U-M5
026-54390-H	KCAVS-12-6	6-4HMK4BLSS	PFTM-60-NBR-G2
026-54392-G	KCAVS-15-8	6-4HMK4S	PFTM-60-NBR-G2
026-54392-H	KCBGL50-316MC	6-4HMK4SS	PFTM-60-SI-G2
026-54394-H	KCBGLX120-316	6-4HMLOS	PFTM-60-SI-G2
026-54397-K	KCBGLX120-316MC	6-4HMTXS	PFTM-60-U-G2
026-54404-H	KCBGLX160-316	6-4HMTXSS	PFTM-60-U-G2
026-54412-A	KCBGLX160-316MC	6-4K CBZ-SS	PFTM-6A-NBR-G1
026-54412-H	KCBGLX160316SOG	6-4K FBZ-SS	PFTM-6A-NBR-G1
026-54413-A	KCBGLX240-316MC	6-4K T2HF-SS	PFTM-6A-NBR-M5
026-54415-H	KCBGLX40-316MC	6-4K6OO4MXS	PFTM-6A-NBR-M5
026-54432-H	KCBGLX60-2507	6-4K6PP4MXS	PFTM-6A-SI-G1
026-54433-H	KCBGLX60-316	6-4R CBZ-SS	PFTM-6A-SI-G1
026-54434-H	KCBGLX60-316MC	6-4R CBZ-SS	PFTM-6A-SI-M5
026-54435-H	KCBGLX60316MCCT	6-4R FBZ-SS	PFTM-6A-SI-M5
026-54436-H	KCBGLX60316MCSG	6-4R T2HG-SS	PFTM-6A-U-G1
026-54437-H	KCBGLX60316MCWH	6-4R6O4MXS	PFTM-6A-U-G1

026-54439-H	KCBGLX60-316SOG	6-4R6P4MLOS	PFTM-6A-U-M5
026-54440-H	KCBGLX60-HCSOG	6-4R6P4MXS	PFTM-6A-U-M5
026-54441-H	KCBGLX60I62MCTH	6-4RA-6MO	PFTM-80-NBR-G2
026-54442-H	KCBGLX60I62MSCT	64SFAW17MXX	PFTM-80-NBR-G2
026-54463-P	KCBGLX60-MC3.38	6-4TRMLONS	PFTM-80-SI-G2
026-54466-D	KCBGLX90-316	6-4TRMLONSS	PFTM-80-SI-G2
026-54466-G	KCBGLX90-316MC	6-4TRMTXSS	PFTM-80-U-G2
026-54466-H	KCBGLX90316MCSG	6-4TRTXS	PFTM-80-U-G2
026-54468-H	KCBGLX90-316SOG	6-5 C5OX-S	PFTM-8A-NBR-G1
026-54479-0	KCBGLX90I625MCH	6-5 F5OLO-S	PFTM-8A-NBR-G1
026-54486-A	KCBLX120-316MC	6-5 F5OX-S	PFTM-8A-NBR-M5
026-54505-H	KCBLX160-316MC	6-5 HBZ-SS	PFTM-8A-NBR-M5
026-54506-H	KCBLX40-316MC	6-5 HTX-S	PFTM-8A-SI-G1
026-54507-A	KCBLX60-316	6-5 TRBZ-SS	PFTM-8A-SI-G1
026-54507-D	KCBLX60-316MC	650-21115010-000P00-A0	PFTM-8A-SI-M5
026-54507-G	KCBLX90-316	650-21115010-000P00-D1	PFTM-8A-SI-M5
026-54507-H	KCBLX90-316MC	650-21115010-000P00-F1	PFTM-8A-U-G1
026-54507-J	KCCLX120-316MC	650-21115010-0F0P00-A0	PFTM-8A-U-G1
026-54507-K	KCCLX160-316MC	650-21115010-0F0P00-A1	PFTM-8A-U-M5
026-54508-A	KCCLX40-316MC	650-21115010-0F0P00-D1	PFTM-8A-U-M5
026-54508-G	KCCLX60-316	650-21115010-0F0P00-E1	PFTM-95-NBR-G2
026-54508-H	KCCLX60-316MC	650-21115010-0F0PR0-A1	PFTM-95-NBR-G2
026-54509-G	KCCLX90-316	650-21115010-0F1P00-A0	PFTM-95-SI-G2
026-54509-H	KCCLX90-316MC	650-21115010-0F1P00-A2	PFTM-95-SI-G2
026-54513-H	KCE47-10-4	650-21115010-0F1P00-D2	PFTM-95-U-G2
026-54513-K	KCE47-10-4C	650-21122010-000P00-A0	PFTM-95-U-G2
026-54514-H	KCE47-10-5	650-21122010-000P00-A1	PFTYS12070NBRG2
026-54516-H	KCE47-10-5C	650-21122010-000P00-B1	PFTYS12070NBRG2
026-54517-8	KCE47-10-6	650-21122010-000P00-D1	PFTYS15020NBRG2
026-54517-D	KCE47-10-6C	650-21122010-000P00-F1	PFTYS15020NBRG2
026-54517-DXG043	KCE47-12-5	650-21122010-001P00-A0	PFTYS20B15SI
026-54517-G	KCE47-12-6	650-21122010-001P00-B2	PFTYS20B15SI
026-54517-H	KCE47-12-6C	650-21122010-0F0P00-A0	PFTYS2530NBR
026-54517-J	KCE47-15-6	650-21122010-0F0P00-A1	PFTYS2530NBR
026-54519-H	KCE47-15-8	650-21122010-0F0P00-B1	PFTYS3030SI
026-54520-H	KCE47-15-8C	650-21122010-0F0P00-D0	PFTYS3030SI
026-54551-H	KCE47-18-10	650-21122010-0F0P00-D1	PFTYS306NBR
026-54566-0	KCE47-18-10C	650-21122010-0F0P00-E1	PFTYS306NBR
026-54725-0	KCE47-18-12	650-21122010-0F0P00-F1	PFTYS3515NBR
026-54819-0	KCE47-22-12	650-21122010-0F0PR0-A1	PFTYS3515NBR
026-54890-0	KCE47-22-12C	650-21122010-0F1P00-A0	PFTYS356SI
026-54890-5	KCE47-28-16	650-21122010-0F1P00-A2	PFTYS356SI
026-54912-H	KCE47-28-16C	650-21122010-0F1P00-B2	PFTYS6045SIG1
026-54913-H	KCE47-6-4	650-21122010-0F1P00-D2	PFTYS6045SIG1
026-54915-H	KCE47-6-4C	650-21130010-000P00-A1	PFTYS8045NBRG1
026-54916-H	KCE47-8-4	650-21130010-000P00-B1	PFTYS8045NBRG1
026-54917-H	KCE47-8-4C	650-21130010-000P00-F1	PFX-1823-0001B
026-54920-G	KCE47-8-5	650-21130010-001P00-A0	PFX-1823-0001B
026-54920-H	KCEPX-10-05	650-21130010-001P00-A2	PFX-2404-0001B
026-54921-H	KCEPX-12-06	650-21130010-0F0P00-A0	PFX-2404-0001B
026-54933-P	KCEPX-6-03	650-21130010-0F0P00-A1	PFYK-100-NBR-G1
026-54934-P	KCEPX-8-04	650-21130010-0F0P00-B1	PFYK-100-NBR-G1
026-54935-B	KCEV6-35-20	650-21130010-0F0P00-D1	PFYK-120-NBR-G1

026-54935-C	KCEV6-42-24	650-21130010-0F0P00-E1	PFYK-120-NBR-G1
026-54935-P	KCEVS-12-6	650-21130010-0F0P00-F1	PFYK-150-NBR-G1
026-54935-S	KCEVS-15-8	650-21130010-0F0PR0-A1	PFYK-150-NBR-G1
026-54935-X	KCF47-10-4	650-21130010-0F1P00-A0	PFYK-200-NBR-G1
026-54984-G	KCF47-10-4C	650-21130010-0F1P00-A2	PFYK-200-NBR-G1
026-54984-H	KCF47-10-5	650-21130010-0F1P00-D2	PFYK-2A-NBR
026-54985-G	KCF47-10-5C	650-21140010-000P00-A0	PFYK-2A-NBR
026-54985-H	KCF47-10-6	650-21140010-000P00-A1	PFYK-3.5A-NBR
026-54986-G	KCF47-10-6C	650-21140010-000P00-B1	PFYK-3.5A-NBR
026-54986-H	KCF47-12-4	650-21140010-000P00-D1	PFYK-30-NBR
026-54987-H	KCF47-12-5	650-21140010-000P00-F1	PFYK-30-NBR
026-54988-H	KCF47-12-6	650-21140010-001P00-A0	PFYK-50-NBR
026-54989-A	KCF47-12-6C	650-21140010-001P00-A2	PFYK-50-NBR
026-54989-H	KCF47-12-8	650-21140010-001P00-B2	PFYK-60-NBR-G1
026-54990-A	KCF47-15-10	650-21140010-0F0P00-A0	PFYK-60-NBR-G1
026-54990-G	KCF47-15-6	650-21140010-0F0P00-A1	PG-038
026-54990-H	KCF47-15-8	650-21140010-0F0P00-B1	PG-050
026-54990-K	KCF47-15-8C	650-21140010-0F0P00-D1	PG-062
026-54992-A	KCF47-18-10	650-21140010-0F0P00-E1	PG-075
026-54992-G	KCF47-18-10C	650-21140010-0F0P00-F1	PG-088
026-54992-H	KCF47-18-12	650-21140010-0F0PR0-A1	PG10/025
026-54992-J	KCF47-18-8	650-21140010-0F0PU0-D1	PG10/030/DV
026-54993-A	KCF47-22-12	650-21140010-0F1P00-A0	PG10/060/DV
026-54993-G	KCF47-22-12C	650-21140010-0F1P00-A2	PG10/075/DV
026-54993-H	KCF47-22-16	650-21140010-0F1P00-D2	PG10/100
026-54995-H	KCF47-28-12	650-21155020-000P00-A1	PG-100
026-54996-H	KCF47-28-16	650-21155020-001P00-A0	PG10001-250/0135EN
026-54997-H	KCF47-28-16C	650-21155020-0F0P00-A1	PG10001-250/0135EN
026-54999-G	KCF47-6-4	650-21155020-0F0P00-D1	PG10005-0010
026-54999-H	KCF47-6-4C	650-21155020-0F0P00-E1	PG10005-0010
026-55000-A	KCF47-8-4	650-21155020-0F1P00-A0	PG10018-0220
026-55000-G	KCF47-8-4C	650-21155020-0F1P00-A2	PG10018-0220
026-55000-H	KCF47-8-5	650-21170020-000P00-A0	PG10018-0640
026-55001-A	KCFEX-5-025	650-21170020-000P00-A1	PG10018-0640
026-55001-G	KCFPX-10-04	650-21170020-000P00-B1	PG10018-0750
026-55002-H	KCFPX-10-05	650-21170020-000P00-F1	PG10018-0750
026-55003-H	KCFPX-10-06	650-21170020-001P00-A0	PG10024-0800
026-55004-A	KCFPX-12-05	650-21170020-001P00-A2	PG10024-0800
026-55004-G	KCFPX-12-06	650-21170020-001P00-B2	PG10042-0700
026-55004-H	KCFPX-15-08	650-21170020-0F0P00-A1	PG10042-0700
026-55006-H	KCFPX-22-12	650-21170020-0F0P00-D1	PG10042-0850
026-55007-H	KCFPX-6-03	650-21170020-0F0P00-E1	PG10042-0850
026-55008-0	KCFPX-8-04	650-21170020-0F0P00-F1	PG10074
026-55009-H	KCFPX-8-04-6V	650-21170020-0F0PK0-D0	PG10074
026-55010-G	KCFV6-35-20	650-21170020-0F0PR0-A1	PG10074
026-55011-H	KCFV6-42-24	650-21170020-0F1P00-A0	PG10074
026-55013-H	KCFVS-12-6	650-21170020-0F1P00-A2	PG10074
026-55029-0	KCFVS-15-8	650-21170020-0F1P00-B2	PG10074
026-55172-H	KCGL40-316	650-21170020-0F1P00-D2	PG115-005-010/MB115-039
026-55199-H	KCGL40-316SOG	650-22196030-B00P00-A1	PG115-015/MB115-027
026-55219-A	KCGL60-316	650-22196030-B00P00-B1	PG-119
026-55246-0	KCGL60-316SOG	650-22196030-B00P00-F1	PG12/025
026-55247-0	KCGL60-316UR	650-22196030-B01P00-B2	PG12/030/DV

026-55248-H	KCGL90-316	650-22196030-BF0P00-A1	PG12/045/IG
026-55250-D	KCGL90-316SOG	650-22196030-BF0P00-D1	PG12/060/DV
026-55250-H	KCGL90-316UR	650-22196030-BF1P00-A0	PG12/060/DVS_02
026-55251-G	KCL40-316	650-22196030-BF1P00-A2	PG12/075/DV
026-55251-H	KCL40-316SOG	650-23212330-BF0P00-B1	PG12/100
026-55252-G	KCL60-316	650-23212330-BF0P00-D1	PG12/260/DV
026-55252-H	KCL90-316	650-23216430-B01P00-B2	PG12/275/84PV
026-55252-K	KCL90-316SOG	650-23216430-BF0P00-A1	PG12/275/DV
026-55253-A	KCW47-15-5	650-23216430-BF0P00-B1	PG-138
026-55253-D	KCW47-15-6	6503 06 10WP3	PG142-005/MB142-078
026-55253-G	KD047-10-4	6503 06 13WP3	PG142-015-***-SB/MB-078
026-55253-H	KD047-10-5	6503 06 17WP3	PG180-020-SB/MB180-006
026-55253-J	KD047-10-5C	6503 08 10WP3	PG-188
026-55253-K	KD047-10-6	6503 08 13WP3	PGALP150502SBE222
026-55254-H	KD047-12-4	6503 08 17WP3	PGB.0631.006
026-55255-H	KD047-12-5	6503 10 13WP3	PGB0631004
026-55256-H	KD047-12-6	6503 10 17WP3	PGB0631010
026-55256-J	KD047-12-6C	6503 10 21WP3	PGB0631016
026-55257-H	KD047-12-8	6503 12 17WP3	PGB0631025
026-55257-J	KD047-15-10	6503 12 21WP3	PGB0631040
026-55258-H	KD047-15-6	6503 56 10WP3	PGB0631060
026-55258-K	KD047-15-8	6503 56 11WP3	PGB0631100
026-55259-A	KD047-15-8C	6503 56 13WP3	PGB0631160
026-55259-G	KD047-18-10	6503 56 14WP3	PGB0631250
026-55259-H	KD047-18-10C	6503 56 17WP3	PGB0631400
026-55259-J	KD047-18-12	6503 56 18WP3	PGB0631600
026-55260-H	KD047-18-8	6503 60 13WP3	PGB1001010
026-55262-H	KD047-22-12	6503 60 14WP3	PGB1001016
026-55264-H	KD047-22-12C	6503 60 17WP3	PGB1001025
026-55308-A	KD047-28-16	6503 60 18WP3	PGB1001040
026-55376-H	KD047-28-16C	6503 62 17WP3	PGB1001060
026-55482-H	KD047-6-4	6503 62 18WP3	PGB1001100
026-55493-H	KD047-8-4	6503 62 21WP3	PGB10011000
026-55533-G	KD047-8-5	6503 62 22WP3	PGB1001160
026-55533-H	KD06	650-43115020-B00P00-A1	PGB1001250
026-55561-H	KD0NX-10-05	650-43115020-B00P00-B1	PGB1001400
026-55574-H	KD0NX-10-05C2	650-43115020-B00P00-F0	PGB1001600
026-55619-H	KD0NX-12-06	650-43115020-B00P00-F1	PGC.0631.006
026-55631-H	KD0NX-12-06C2	650-43115020-BF0P00-A0	PGC0631004
026-55653-0	KD0NX-15-08	650-43115020-BF0P00-A1	PGC0631010
026-55663-H	KD0NX-22-12	650-43115020-BF0P00-B1	PGC0631016
026-55664-H	KD0NX-28-16	650-43115020-BF0P00-D1	PGC0631025
026-55675-0	KD0NX-35-20	650-43115020-BF0P00-E1	PGC0631040
026-55706-H	KD0NX-8-04	650-43115020-BF0PR0-A1	PGC0631060
026-55749-0	KD0NX-8-04C2	650-43115020-BF1P00-A0	PGC0631100
026-55758-H	KD0PX-10-05	650-43115020-BF1P00-A2	PGC0631160
026-55775-P	KD0PX-12-06	650-43115020-BF1P00-B2	PGC0631250
026-55782-P	KD0PX-15-08	650-43120020-B00P00-A1	PGC0631400
026-55782-T	KD0PX-15-08C2	650-43120020-B00P00-B1	PGC0631400S
026-55782-U	KD0PX-18-10	650-43120020-B00P00-F1	PGC0631600
026-56003-H	KD0PX-22-12	650-43120020-B01P00-A0	PGE1001010
026-56004-H	KD0PX-28-16	650-43120020-BF0P00-A0	PGE1001016
026-56041-H	KD0PX-6-03	650-43120020-BF0P00-A1	PGE1001025

026-56047-P	KD0PX-6-03C	650-43120020-BF0P00-B1	PGE1001040
026-56064-P	KD0PX-8-04	650-43120020-BF0P00-D1	PGE1001060
026-56076-H	KD0V6-35-20	650-43120020-BF0P00-F1	PGE1001100
026-56094-G	KD0V6-42-24	650-43120020-BF0PR0-A1	PGE10011000
026-56094-H	KD0VS-12-6	650-43120020-BF1P00-A0	PGE1001160
026-56099-A	KD0VS-15-8	650-43120020-BF1P00-B2	PGE1001250
026-56099-H	KD1/271	650-43120020-BF1P00-D0	PGE1001400
026-56107-0	KD1/471	650-43125020-B00P00-A1	PGE1001600
026-56129-T	KD1/871	650-43125020-B00P00-B1	PGF0631004
026-56157-0	KD10-1/8SS	650-43125020-B00P00-D1	PGF0631010
026-56212-H	KD11/271	650-43125020-B00P00-F1	PGF0631016
026-56227-0	KD11/471	650-43125020-B01P00-A2	PGF0631025
026-56228-0	KD12	650-43125020-B01P00-B2	PGF0631040
026-56231-D	KD1271	650-43125020-BF0P00-A0	PGF0631060
026-56231-H	KD1671	650-43125020-BF0P00-A1	PGF0631100
026-56232-G	KD171	650-43125020-BF0P00-B1	PGF0631160
026-56232-H	KD1871	650-43125020-BF0P00-D1	PGF0631250
026-56233-H	KD2071	650-43125020-BF0P00-F1	PGF0631400
026-56234-0	KD22-1/2SS	650-43125020-BF0PR0-A1	PGF0631600
026-56234-5	KD2271	650-43125020-BF0PU0-D1	PGF1001010
026-56260-0	KD247-10-4	650-43125020-BF1P00-A0	PGF1001016
026-56280-0	KD247-10-4C	650-43125020-BF1P00-A2	PGF1001025
026-56282-0	KD247-10-5	650-43125020-BF1P00-D2	PGF1001040
026-56290-H	KD247-10-6	650-43135020-B00P00-A1	PGF1001060
026-56313-H	KD247-12-4	650-43135020-B00P00-F1	PGF1001100
026-56314-A	KD247-12-5	650-43135020-BF0P00-A1	PGF10011000
026-56314-G	KD247-12-5C	650-43135020-BF0P00-D1	PGF1001160
026-56314-H	KD247-12-6	650-43135020-BF0PR0-A1	PGF1001250
026-56320-H	KD247-12-6C	650-43135020-BF1P00-A0	PGF1001400
026-56342-0	KD247-14-5	650-43135020-BF1P00-A2	PGF1001600
026-56470-0	KD247-14-6	650-43135020-BF1P00-D2	PGFS080BSM
026-56522-T	KD247-14-6C	650-43145020-B00P00-A0	PGFS080BSSM
026-56528-0	KD247-16-10	650-43145020-B00P00-A1	PGFS080BSU
026-56562-0	KD247-16-8	650-43145020-B00P00-B1	PGFS080S17.5SM
026-56579-5	KD247-16-8C	650-43145020-B00P00-D1	PGFS080S17.5SU
026-56584-H	KD247-20-10	650-43145020-B00P00-F1	PGFS080S21.6SM
026-56592-0	KD247-20-10C	650-43145020-B01P00-B2	PGFS080S21.6SU
026-56597-G	KD247-20-12	650-43145020-BF0P00-A0	PGFS100BSM
026-56604-0	KD247-25-12	650-43145020-BF0P00-A1	PGFS100BSSM
026-56615-0	KD247-25-12C	650-43145020-BF0P00-B1	PGFS100BSU
026-56620-0	KD247-25-16	650-43145020-BF0P00-D1	PGFS100S27.2SM
026-56624-0	KD247-30-16	650-43145020-BF0P00-E1	PGFS100S27.2SSM
026-56667-0	KD247-30-16C	650-43145020-BF0P00-F1	PGFS100S27.2SU
026-56667-4	KD247-6-4	650-43145020-BF0PR0-A1	PGFS102BSM
026-56669-0	KD247-8-4	650-43145020-BF1P00-A0	PGFS102BSSM
026-56669-5	KD2671	650-43145020-BF1P00-A2	PGFS102BSU
026-56700-H	KD2771	650-43145020-BF1P00-B2	PGFS102S34.1SM
026-56715-T	KD2NX-10-04	650-43145020-BF1P00-D2	PGFS102S34.1SSM
026-56722-H	KD2NX-12-05	650-43145020-BF1P00-F2	PGFS102S34.1SU
026-56725-0	KD2NX-12-05C2	650-43155020-B00P00-A1	PGFS104B31BSM
026-56726-0	KD2NX-14-06	650-43155020-B00P00-B1	PGFS104BSM
026-56732-U	KD2NX-14-06C2	650-43155020-B00P00-F1	PGFS104BSSM
026-56807-H	KD2NX-16-08	650-43155020-B01P00-A0	PGFS104BSU

026-56816-S	KD2NX-20-10	650-43155020-B01P00-A2	PGFS104S42.8SM
026-56836-G	KD2NX-25-12	650-43155020-B01P00-B2	PGFS104S42.8SSM
026-56836-H	KD2NX-30-16	650-43155020-B01P00-F2	PGFS104S42.8SU
026-56859-P	KD2PX-12-05	650-43155020-BF0P00-A1	PGFS106B31BSM
026-56859-S	KD2V4-20-12	650-43155020-BF0P00-B1	PGFS106BSM
026-56873-H	KD2V4-25-12	650-43155020-BF0P00-D1	PGFS106BSSM
026-56927-H	KD2V4-25-12C	650-43155020-BF0P00-E1	PGFS106BSU
026-56944-0	KD2V4-30-16	650-43155020-BF0P00-F1	PGFS106S48.6SM
026-56952-H	KD2V4-38-20	650-43155020-BF0PK0-D0	PGFS106S48.6SSM
026-56962-0	KD2V4-38-24	650-43155020-BF0PR0-A1	PGFS106S48.6SU
026-56967-H	KD2V6-30-20	650-43155020-BF1P00-A0	PGFS108B31BSM
026-56974-H	KD2V6-38-20	650-43155020-BF1P00-A2	PGFS108BSM
026-56991-0	KD2V6-38-24	650-43155020-BF1P00-D2	PGFS108BSSM
026-57002-0	KD2VS-12-6	650-43155020-BF1P00-F2	PGFS108BSU
026-57033-0	KD2VS-14-6	650-43168030-B00P00-A1	PGFS108S61SM
026-57046-H	KD2VS-16-8	650-43168030-B00P00-D1	PGFS108S61SSM
026-57046-K	KD3/471	650-43168030-B00P00-F1	PGFS108S61SU
026-57051-0	KD3/871	650-43168030-BF0P00-A1	PGFS110BSM
026-57077-H	KD8NX-6-04	650-43168030-BF0P00-D1	PGFS110BSSM
026-57119-0	KD8RX-6-04	650-43168030-BF0P00-F1	PGFS110BSU
026-57126-0	KD947-10-10	650-43168030-BF0PR0-A1	PGFS110S76.6SM
026-57152-H	KD947-10-8	650-43168030-BF1P00-A0	PGFS110S76.6SU
026-57173-U	KD947-12-10	650-43168030-BF1P00-A2	PGFS112BSM
026-57187-0	KD947-12-12	650-43168030-BF1P00-D2	PGFS112BSSM
026-57191-0	KD947-12-12C	650-43190030-B00P00-A1	PGFS112BSU
026-57194-0	KD947-12-8	650-43190030-B00P00-B1	PGFS112S90.5SM
026-57215-P	KD947-16-12	650-43190030-B00P00-D1	PGFS112S90.5SU
026-57269-H	KD947-16-16	650-43190030-B00P00-F1	PGFS114BSM
026-57281-0	KD947-16-16C	650-43190030-B01P00-A2	PGFS114BSSM
026-57295-0	KD947-2-4	650-43190030-B01P00-B2	PGFS114BSU
026-57297-H	KD947-4-4	650-43190030-BF0P00-A1	PGFS114S103SM
026-57328-G	KD947-4-5	650-43190030-BF0P00-B1	PGFS114S103SU
026-57331-A	KD947-4-6	650-43190030-BF0P00-D1	PGFS116BSM
026-57331-G	KD947-6-4	650-43190030-BF0P00-F1	PGFS116BSSM
026-57331-H	KD947-6-5	650-43190030-BF0PR0-A1	PGFS116BSU
026-57332-S	KD947-6-6	650-43190030-BF0PU0-D1	PGFS116S115.5SM
026-57335-H	KD947-6-6C	650-43190030-BF1P00-A0	PGFS116S115.5SU
026-57337-H	KD947-6-8	650-43190030-BF1P00-A2	PGFS118BSM
026-57343-H	KD947-8-10	650-43190030-BF1P00-D2	PGFS118BSU
026-57351-H	KD947-8-4	650-43212030-B00P00-A1	PGFS118S142SM
026-57351-HL	KD947-8-6	650-43212030-B00P00-B1	PGFS118S142SU
026-57353-B	KD947-8-8	650-43212030-B00P00-D1	PGFS401B38SM
026-57353-S	KD947-8-8C	650-43212030-B00P00-F1	PGFS401B38SU
026-57353-V	KD97X-4-04	650-43212030-B01P00-A2	PGFS401BSM
026-57357-G	KD9NX-4-04	650-43212030-B01P00-B2	PGFS401BSSM
026-57357-H	KD9NX-4-04C	650-43212030-BF0P00-A1	PGFS401BSU
026-57358-B	KD9NX-6-04	650-43212030-BF0P00-B1	PGFS401S17.5SM
026-57360-HL	KD9PX-2-02	650-43212030-BF0P00-D1	PGFS401S17.5SU
026-57366-G	KD9PX-2-03	650-43212030-BF0P00-F1	PGFS401S21.6SM
026-57366-H	KD9PX-4-03	650-43212030-BF0PR0-A1	PGFS401S21.6SU
026-57367-B	KD9PX-4-04	650-43212030-BF0PU0-D1	PGFS402B25X3SM3
026-57367-S	KD9PX-8-08	650-43212030-BF1P00-A0	PGFS402B30X5.5SM3
026-57369-H	KD9V4-12-12	650-43212030-BF1P00-A2	PGFS402BSM

026-57370-B	KD9V4-16-16	650-43212030-BF1P00-D2	PGFS402BSSM
026-57374-G	KD9V4-20-20	650-43216030-B00P00-A1	PGFS402BSU
026-57374-H	KD9V4-24-24	650-43216030-B00P00-B1	PGFS402S27.2SM
026-57375-B	KD9V4-32-32	650-43216030-B00P00-D1	PGFS402S27.2SU
026-57375-S	KD9V6-20-20	650-43216030-B00P00-F1	PGFS403/90B25X3SM3
026-57376-H	KD9V6-24-24	650-43216030-B01P00-B2	PGFS403/90S34.1SM
026-57379-G	KD9V6-32-32	650-43216030-B01P00-F2	PGFS403B20X4SM3
026-57379-H	KD9VS-6-6	650-43216030-BF0P00-A1	PGFS403BSM
026-57379-HL	KD9VS-8-8	650-43216030-BF0P00-D1	PGFS403BSSM
026-57385-B	KDD47-12-6	650-43216030-BF0P00-E1	PGFS403BSU
026-57385-S	KDD47-15-8	650-43216030-BF0P00-F1	PGFS403S34.1SM
026-57394-G	KDD47-8-4	650-43216030-BF0PR0-A1	PGFS403S34.1SU
026-57394-H	KDK47-12-8	650-43216030-BF1P00-A0	PGFS404BSM
026-57394-HL	KDK47-15-10	650-43216030-BF1P00-A2	PGFS404BSSM
026-57396-B	KDK47-15-8	650-43216030-BF1P00-D2	PGFS404BSU
026-57396-S	KDS10VITX	6505 04 10WP2	PGFS404S38.3SM
026-57397-H	KDS10X	6505 04 10WP3	PGFS404S42.8SM
026-57399-H	KDS12VITX	6505 04 13WP2	PGFS404S42.8SU
026-57405-H	KDS12X	6505 04 13WP3	PGFS405BSM
026-57406-H	KDS14VITX	6505 06 10WP3	PGFS405BSSM
026-57411-H	KDS14X	6505 06 13WP3	PGFS405BSU
026-57413-H	KDS16VITX	6505 08 10WP2	PGFS405S48.6SM
026-57416-H	KDS16X	6505 08 10WP3	PGFS405S48.6SSM
026-57422-0	KDS18VITX	6505 08 13WP2	PGFS405S48.6SU
026-57488-H	KDS18X	6505 08 13WP3	PGFS406BSM
026-57491-A	KDS22VITX	6505 08 17WP3	PGFS406BSSM
026-57491-H	KDS22X	6505 10 13WP3	PGFS406BSU
026-57492-H	KDS26VITX	6505 10 17WP3	PGFS406S61SM
026-57493-H	KDS26X	6505 10 21WP3	PGFS406S61SSM
026-57494-H	KDS27VITX	6505 12 17WP3	PGFS406S61SU
026-57500-H	KDS27X	6505 12 21WP3	PGFS407BSM
026-57502-H	KDS33VITX	6505 56 10WP2	PGFS407S76.6SM
026-57523-0	KDS33X	6505 56 10WP3	PGFS408BSM
026-57525-G	KDS42VITX	6505 56 11WP3	PGFS408S90.5SM
026-57525-H	KDS42X	6505 56 13WP2	PH050MMA01
026-57539-H	KDS48VITX	6505 56 13WP3	PH063MMA01
026-57558-H	KDS48X	6505 56 14WP3	PH080MMA01
026-57584-0	KE070SN	6505 56 18WP3	PH100MMA01
026-57609-0	KE100SN	6505 60 11WP3	PH125MMA01
026-57697-0	KE150SN	6505 60 13WP3	PH-4-4K-TFS-316
026-57711-B	KE42-0404	6505 60 14WP3	PH-4-4N-TMS-316
026-57711-C	KE42-0404	6505 60 17WP3	PH-4-8N-TMS-316
026-57712-0	KEA47-12-12	6505 60 18WP3	PH-4-PE-316
026-57713-0	KEA47-16-16	6505 60 21WP3	PH-4-PS-316
026-57714-0	KEA47-4-4	6505 60 22WP3	PH-4-PT-316
026-57715-0	KEA47-6-4	6505 62 17WP3	PH573FLUON/10
026-57731-H	KEA47-6-6	6505 62 18WP3	PH-6-6N-TMS-316
026-57739-5	KEA47-8-6	6505 62 21WP3	PH-6-PS-316
026-57741-0	KEA47-8-8	6505 62 22WP3	PH-6-PT-316
026-57754-0	KEA-G-UL	6508 06 10WP3	PH-8-8N-TMS-316
026-57756-G	KEB47-12-12	6508 06 13WP3	PH-8-HANDTOOL
026-57756-H	KEB47-16-16	6508 06 17WP3	PH-8-PS-316
026-57764-0	KEB47-4-4	6508 08 10WP3	PH-8-PT-316

026-57785-A	KEB47-6-6	6508 08 13WP3	PH938SS/1
026-57785-H	KEB47-8-8	6508 08 17WP3	PH-ASSY KIT
026-57815-0	KEC47-12-12	6508 10 13WP3	PHC12-12F
026-57815-5	KEC47-16-16	6508 10 17WP3	PHC12-12FSL
026-57818-A	KEC47-4-4	6508 10 21WP3	PHC12-12FV
026-57818-H	KEC47-6-6	6508 12 17WP3	PHC12-12RP
026-57833-B	KEC47-8-8	6508 12 21WP3	PHC16-16F
026-57859-0	KEE47-4-4	6508 56 10WP3	PHC4-4F
026-57887-H	KEE47-6-6	6508 56 11WP3	PHC6-6F
026-57890-G	KEGE06L71X	6508 56 13WP3	PHC8-8F
026-57890-H	KEGE06LX	6508 56 14WP3	PHC8-8FV
026-57891-H	KEGE08L71X	6508 56 17WP3	PHC8-8RP
026-57893-G	KEGE08LX	6508 56 18WP3	PHG-90-NBR
026-57893-H	KEGE10L71X	6508 60 13WP3	PHG-90-NBR
026-57916-0	KEGE10LX	6508 60 14WP3	PH-M10-6N-TMS-316
026-57918-H	KEGE12LX	6508 60 17WP3	PH-M10-PS-316
026-57937-0	KEGE15L71X	6508 60 18WP3	PH-M10-PT-316
026-62026-0	KEGE15LX	6508 62 17WP3	PH-M12-8K-TFS-316
026-62072-H	KEGE18L71X	6508 62 18WP3	PH-M12-8K-TMS-316
026-62134-H	KEGE18LX	6508 62 21WP3	PH-M12-8N-TMS-316
026-62147-H	KEGE22L71X	6508 62 22WP3	PH-M12-PC-316
026-62190-0	KEGE22LX	6509 06 10WP3	PH-M12-PE-316
026-62196-H	KEGE28L71X	6509 06 13WP3	PH-M12-PS-316
026-62220-HL	KEGE28LX	6509 06 17WP3	PH-M12-PT-316
026-62222-H	KEGE35LX	6509 08 10WP3	PHM-15T-A1D3
026-62231-G	KF11165	6509 08 13WP2	PH-M16-PE-316
026-62231-H	KF247-13-5	6509 08 13WP3	PH-M16-PS-316
026-62232-G	KF447-13-5	6509 08 17WP3	PH-M6-4N-TFS-316
026-62233-G	KF447-13-6	6509 10 13WP3	PH-M6-4N-TMS-316
026-62234-H	KF447-17-8	6509 10 17WP3	PH-M6-PC-316
026-62235-G	KF447-21-10	6509 10 21WP3	PH-M6-PE-316
026-62235-H	KF447-27-12	6509 12 17WP3	PH-M6-PS-316
026-62236-G	KF4V4-27-12	6509 12 21WP3	PH-M6-PT-316
026-62236-H	KF4VS-13-6	6509 56 10WP3	PHN12-12F
026-62237-G	KF4VS-17-8	6509 56 11WP3	PHN12-12M
026-62237-H	KFA47-12-5	6509 56 13WP3	PHN12-12RP
026-62257-H	KFB6A	6509 56 14WP3	PHN16-16F
026-62268-G	KFB8A	6509 56 17WP3	PHN16-16M
026-62268-H	KFB8ASSB	6509 56 18WP3	PHN16-16RP
026-62269-H	KFB8F	6509 60 13WP3	PHN20-20F
026-62276-H	KFB8F3	6509 60 14WP3	PHN24-24F
026-62280-0	KFB8FSSB	6509 60 17WP3	PHN24-24RP
026-62280-5	KFBBW8NB8	6509 60 18WP3	PHN32-32F
026-62297-H	KFBBW8NB83	6509 62 17WP3	PHN32-32RP
026-62318-0	KFBM10A	6509 62 18WP3	PHN4-4F
026-62328-H	KFBM10A3SSB	6509 62 21WP3	PHN4-4M
026-62342-0	KFBM10ASSB	6509 62 22WP3	PHN6-6F
026-62344-0	KFBM12A	650G-21115010-001P00-A1	PHN6-6M
026-62356-0	KFBM12A3	650G-21115010-001P00-A2	PHN6-6RP
026-62360-0	KFBM12A3SSB	650G-21115010-0F1P00-A1	PHN8-8F
026-62362-0	KFG47-13-5	650G-21115010-0F1P00-A2	PHN8-8M
026-62370-0	KFG47-13-6	650G-21122010-001P00-A1	PHN8-8RP
026-62372-0	KFG47-17-8	650G-21122010-001P00-A2	PHS510S-6-220V

026-62383-0	KFG47-21-10	650G-21122010-0F1P00-A1	PHS510S-6-220V
026-62425-0	KFGV4-27-12	650G-21122010-0F1P00-A2	PHS520D-8
026-62442-0	KFGV4-33-16	650G-21130010-0F1P00-A1	PHS520D-8
026-62443-0	KFGVS-13-6	650G-21140010-001P00-A0	PHS520E-8
026-62462-0	KFGVS-17-8	650G-21140010-001P00-A1	PHS520E-8
026-62463-H	KFH/XS18	650G-21140010-001P00-A2	PHS520-M4
026-62468-H	KFN11165	650G-21140010-0F1P00-A1	PHS520-M4
026-62482-H	KFNX13165AD12	650G-21140010-0F1P00-A2	PHS520-M6
026-62510-P	KFP/TBF08	650G-21155020-001P00-A1	PHS520-M6
026-62510-U	KFP/TRM	650G-21155020-001P00-A2	PHS520S-8
026-62511-H	KFP/TRS	650G-21155020-0F1P00-A1	PHS520S-8
026-62517-0	KFU47-12-12	650G-21170020-001P00-A0	PHS520S-8-L
026-62521-H	KFU47-4-4	650G-21170020-001P00-A1	PHS520S-8-L
026-62568-0	KFU47-6-4	650G-21170020-001P00-A2	PHS520SRK
026-62571-H	KFU47-6-6	650G-21170020-0F1P00-A0	PHS520SRK
026-62574-0	KFU47-8-8	650G-21170020-0F1P00-A1	PH-TPAT-M10
026-62632-0	KG6001	650G-22196030-B01P00-A0	PH-TPAT-M12
026-62645-H	KG6001	650G-22196030-B01P00-A1	PH-TPAT-M6
026-62711-H	KG6006	650G-22196030-B01P00-A2	PH-TPAT-M8
026-62712-H	KG6006	650G-22196030-BF1P00-A1	PIA14548
026-62716-H	KG6093-00	650G-23212330-B01P00-A0	PID00A-400
026-62717-H	KG6093-00	650G-23216430-B01P00-A0	PID00A-401
026-62720-H	KG7067-00	650G-23216430-B01P00-A1	PIO-306
026-62726-H	KG7067-00	650G-23216430-B01P00-A2	PIO-337
026-62726-K	KG8012-00	650G-43115020-B01P00-A1	PIO-347
026-62727-H	KG8012-00	650G-43115020-B01P00-A2	PIO-402
026-62728-H	KG8012-05	650G-43115020-BF1P00-A1	PIO-430
026-62729-H	KG8012-05	650G-43115020-BF1P00-A2	PIO-468
026-62730-H	KG8013-00	650G-43120020-B01P00-A1	PIO-480
026-62731-H	KG8013-00	650G-43120020-B01P00-A2	PIO-504
026-62733-H	KG8043-00	650G-43120020-BF1P00-A1	PIO-530
026-62734-H	KG8043-00	650G-43125020-B01P00-A0	PIO-550
026-62735-H	KG8054	650G-43125020-B01P00-A1	PIO-552
026-62736-A	KG8054	650G-43125020-B01P00-A2	PIO-600
026-62736-H	KGAPX-12-03N	650G-43125020-BF1P00-A0	PIO-602
026-62737-A	KGAPX-8-04N	650G-43125020-BF1P00-A1	PJ14N
026-62737-H	KGAPX-8-04NB	650G-43125020-BF1P00-A2	PJ2-3/8-70
026-62741-H	KGL40-316	650G-43135020-B01P00-A1	PJ2-3/8-70
026-62743-A	KGL40-316SOG	650G-43135020-B01P00-A2	PJ916U
026-62743-H	KGL60-316	650G-43135020-BF1P00-A1	PJG-10-NBR
026-62744-H	KGL90-316	650G-43145020-B01P00-A0	PJG-10-NBR
026-62746-H	KGL90-316SOG	650G-43145020-B01P00-A1	PJG-10-SI
026-62752-H	KGLX120-316MC	650G-43145020-B01P00-A2	PJG-10-SI
026-62756-H	KGLX160-316MC	650G-43145020-BF1P00-A1	PJG-10-SIE
026-62757-A	KGLX40-316MC	650G-43145020-BF1P00-A2	PJG-10-SIE
026-62757-G	KGLX60-316	650G-43155020-B01P00-A0	PJG-15-NBR
026-62757-H	KGLX60-316MC	650G-43155020-B01P00-A1	PJG-15-NBR
026-62758-H	KGLX90-316	650G-43155020-B01P00-A2	PJG-15-SI
026-62759-H	KGLX90-316MC	650G-43155020-BF1P00-A0	PJG-15-SI
026-62762-G	KH06L	650G-43155020-BF1P00-A1	PJG-15-SIE
026-62762-H	KH06L71	650G-43155020-BF1P00-A2	PJG-15-SIE
026-62764-H	KH06L71X	650G-43168030-B01P00-A1	PJG-15-U
026-62765-H	KH06LX	650G-43168030-B01P00-A2	PJG-15-U

026-62766-H	KH06ZL	650G-43168030-BF1P00-A1	PJG-20-NBR
026-62768-H	KH06ZL71	650G-43168030-BF1P00-A2	PJG-20-NBR
026-62770-A	KH08L	650G-43190030-B01P00-A0	PJG-20-SI
026-62770-H	KH08L71	650G-43190030-B01P00-A1	PJG-20-SI
026-62771-H	KH08L71X	650G-43190030-B01P00-A2	PJG-25-SI
026-62774-H	KH08LCFX	650G-43190030-B01P00-B2	PJG-25-SI
026-62776-H	KH08LX	650G-43190030-BF1P00-A1	PJG-30-FKM
026-62778-H	KH08S	650G-43190030-BF1P00-A2	PJG-30-FKM
026-62779-G	KH08S71	650G-43212030-B01P00-A0	PJG-30-NBR
026-62779-H	KH08S71X	650G-43212030-B01P00-A1	PJG-30-NBR
026-62782-H	KH08SCFX	650G-43212030-B01P00-A2	PJG-30-SI
026-62783-H	KH08SX	650G-43212030-BF1P00-A1	PJG-30-SI
026-62785-A	KH08ZL	650G-43212030-BF1P00-A2	PJG-35-SI
026-62785-H	KH08ZL71	650G-43216030-B01P00-A0	PJG-35-SI
026-62787-H	KH08ZS	650G-43216030-B01P00-A1	PJG-40-NBR
026-62788-H	KH08ZS71	650G-43216030-B01P00-A2	PJG-40-NBR
026-62789-H	KH1/2-71LDCFX	650G-43216030-BF1P00-A1	PJG-40-SI
026-62790-G	KH1/271X	650G-43216030-BF1P00-A2	PJG-40-SI
026-62790-H	KH1/2CFX	650S-21140010-001P00-A1	PJG-50-NBR
026-62791-H	KH1/2NPT71X	650S-21140010-0F1P00-A1	PJG-50-NBR
026-62795-H	KH1/2NPTX	650S-21170020-001P00-A1	PJG-50-SI
026-62796-H	KH1/2PTFE/FPMCFX	650S-21170020-0F1P00-A1	PJG-50-SI
026-62800-A	KH1/2X	650S-43125020-B01P00-A1	PJG-60-NBR
026-62800-H	KH1/471X	650S-43125020-BF1P00-A1	PJG-60-NBR
026-62802-H	KH1/4CFX	650S-43155020-B01P00-A1	PJG-60-SI
026-62803-G	KH1/4NPT71X	650S-43155020-BF1P00-A1	PJG-60-SI
026-62803-H	KH1/4NPTX	650S-43190030-B01P00-A1	PJG-6-NBR
026-62803-J	KH1/4POM/EPDMX	650S-43190030-BF1P00-A1	PJG-6-NBR
026-62805-H	KH1/4PTFE-C3/FKMX	650S-43216030-B01P00-A1	PJG-6-SI
026-62809-H	KH1/4X	650S-43216030-BF1P00-A1	PJG-6-SI
026-62811-H	KH1/871X	650V-21115010-001P00-A1	PJG-6-SIE
026-62812-H	KH1/8CFX	650V-21115010-001P00-A2	PJG-6-SIE
026-62815-H	KH1/8NPT71X	650V-21115010-001P00-D2	PJG-70-NBR
026-62817-H	KH1/8NPTX	650V-21115010-001P00-F2	PJG-70-NBR
026-62818-H	KH1/8X	650V-21115010-0F1P00-A0	PJG-70-SI
026-62820-H	KH10L	650V-21115010-0F1P00-A1	PJG-70-SI
026-62823-H	KH10L71	650V-21115010-0F1P00-A2	PJG-70-U
026-62826-H	KH10L71X	650V-21115010-0F1P00-B2	PJG-70-U
026-62827-H	KH10LCF	650V-21115010-0F1P00-D2	PJG-80-NBR
026-62828-H	KH10LCFX	650V-21122010-001P00-A0	PJG-80-NBR
026-62836-H	KH10LPTFE/FPMX	650V-21122010-001P00-A1	PJG-80-SI
026-62837-H	KH10LX	650V-21122010-001P00-A2	PJG-80-SI
026-62851-W	KH10S	650V-21122010-001P00-B2	PJG-8-NBR
026-62858-P	KH10S71	650V-21122010-001P00-D2	PJG-8-NBR
026-62858-S	KH10S71X	650V-21122010-001P00-E2	PJG-8-SI
026-62864-C	KH10SCFX	650V-21122010-001P00-F2	PJG-8-SI
026-62872-S	KH10SX	650V-21122010-0F1P00-A1	PJL01-201-70
026-62873-S	KH10ZL	650V-21122010-0F1P00-A2	PJL01-201-70
026-62873-V	KH10ZL71	650V-21122010-0F1P00-B2	PJL01-202-70
026-62878-S	KH10ZS	650V-21122010-0F1P00-D2	PJL01-202-70
026-62879-P	KH10ZS71	650V-21122010-0F1P00-E1	PJL1-1/4-70
026-62893-P	KH11/2-71LDCFX	650V-21122010-0F1P00-F1	PJL1-1/4-70
026-62894-S	KH11/271X	650V-21122010-0F1P00-F2	PJLP01-202-70

026-62899-0	KH11/2CFX	650V-21130010-001P00-A1	PJLP01-202-70
026-62900-0	KH11/2DN25X	650V-21130010-001P00-A2	PJLP01-202-80
026-62900-5	KH11/2NPT71X	650V-21130010-001P00-D2	PJLP01-202-80
026-62901-0	KH11/2NPTX	650V-21130010-001P00-F2	PJLP02-201-70
026-62905-0	KH11/2X	650V-21130010-0F1P00-A0	PJLP02-201-70
026-62905-5	KH11/471X	650V-21130010-0F1P00-A1	PJS916U
026-62907-P	KH11/4CFX	650V-21130010-0F1P00-A2	PJTF-20-NBR-G1
026-62916-H	KH11/4DN25X	650V-21130010-0F1P00-D1	PJTF-20-NBR-G1
026-62933-H	KH11/4NPT71X	650V-21130010-0F1P00-D2	PJTF-20-SI-G1
026-62999-T	KH11/4NPTX	650V-21130010-0F1P00-F2	PJTF-20-SI-G1
026-634304	KH11/4X	650V-21140010-001P00-A0	PJTF-30-NBR-G1
026-65000-0	KH12A32S	650V-21140010-001P00-A1	PJTF-30-NBR-G1
026-65000-5	KH12A62S	650V-21140010-001P00-A2	PJTF-30-NBR-G2
026-65003-0	KH12B1V62S	650V-21140010-001P00-B2	PJTF-30-NBR-G2
026-65006-0	KH12B1V62SM	650V-21140010-001P00-D2	PJTF-30-SI-G1
026-65007-0	KH12B2V32SM	650V-21140010-001P00-F1	PJTF-30-SI-G1
026-65008-H	KH12B2V32SU	650V-21140010-001P00-F2	PJTF-30-SI-G2
026-65010-H	KH12B2V62SM	650V-21140010-0F1P00-A0	PJTF-30-SI-G2
026-65011-C	KH12B2V62SU	650V-21140010-0F1P00-A1	PJTF-40-NBR-G1
026-65011-T	KH12L	650V-21140010-0F1P00-A2	PJTF-40-NBR-G1
026-65011-U	KH12L71	650V-21140010-0F1P00-B2	PJTF-40-NBR-G2
026-65012-H	KH12L71X	650V-21140010-0F1P00-D2	PJTF-40-NBR-G2
026-65013-H	KH12LCFX	650V-21140010-0F1P00-E1	PJTF-40-SI-G1
026-65021-0	KH12LX	650V-21140010-0F1P00-E2	PJTF-40-SI-G1
026-65022-0	KH12S	650V-21140010-0F1P00-F1	PJTF-40-SI-G2
026-65031-0	KH12S71	650V-21140010-0F1P00-F2	PJTF-40-SI-G2
026-65032-0	KH12S71X	650V-21155020-001P00-A0	PJTF-50-NBR-G1
026-65036-0	KH12SCFX	650V-21155020-001P00-A1	PJTF-50-NBR-G1
026-65036-5	KH12SX	650V-21155020-0F1P00-A0	PJTF-50-NBR-G2
026-65038-0	KH12ZL	650V-21155020-0F1P00-A1	PJTF-50-NBR-G2
026-65040-0	KH12ZL71	650V-21155020-0F1P00-A2	PJTF-50-SI-G1
026-65041-0	KH12ZS	650V-21155020-0F1P00-D1	PJTF-50-SI-G1
026-65041-5	KH12ZS71	650V-21155020-0F1P00-D2	PJTF-50-SI-G2
026-65042-0	KH14S	650V-21155020-0F1P00-F2	PJTF-50-SI-G2
026-65043-0	KH14S71	650V-21170020-001P00-A1	PJTF-60-NBR-G2
026-65044-0	KH14S71X	650V-21170020-001P00-A2	PJTF-60-NBR-G2
026-65052-G	KH14SX	650V-21170020-001P00-B2	PJTF-60-SI-G2
026-65069-0	KH14ZS	650V-21170020-001P00-D2	PJTF-60-SI-G2
026-65079-H	KH14ZS71	650V-21170020-001P00-F2	PJTF-6-NBR-G1
026-65108-0	KH15L	650V-21170020-0F1P00-A0	PJTF-6-NBR-G1
026-65109-H	KH15L71	650V-21170020-0F1P00-A1	PJTF-6-SI-G1
026-65113-H	KH15L71X	650V-21170020-0F1P00-A2	PJTF-6-SI-G1
026-65121-P	KH15LCFX	650V-21170020-0F1P00-B2	PJTF-70-NBR-G2
026-65131-0	KH15LNOX	650V-21170020-0F1P00-D2	PJTF-70-NBR-G2
026-65132-H	KH15LX	650V-21170020-0F1P00-E2	PJTF-70-SI-G2
026-65158-H	KH15ZL	650V-21170020-0F1P00-F2	PJTF-70-SI-G2
026-65164-H	KH15ZL71	650V-22196030-B01P00-A0	PJTF-80-NBR-G2
026-65167-H	KH16S	650V-22196030-B01P00-A1	PJTF-80-NBR-G2
026-65168-H	KH16S71	650V-22196030-B01P00-B2	PJTF-80-SI-G2
026-65170-H	KH16S71X	650V-22196030-B01P00-F2	PJTF-80-SI-G2
026-65173-H	KH16SCFX	650V-22196030-BF1P00-A1	PJTF-8-NBR-G1
026-65182-P	KH16SPTFE/FPMCFX	650V-22196030-BF1P00-A2	PJTF-8-NBR-G1
026-65187-G	KH16SPTFE/FPMX	650V-22196030-BF1P00-B2	PJTF-8-SI-G1

026-65187-H	KH16SX	650V-22196030-BF1P00-F2	PJTF-8-SI-G1
026-65204-P	KH16ZS	650V-23216430-B01P00-A1	PJTK-15-SI
026-65206-P	KH16ZS71	650V-23216430-B01P00-B2	PJTK-15-SI
026-65208-P	KH171X	650V-23216430-BF1P00-A2	PJTK-20-SI
026-65209-P	KH18L	650V-23216430-BF1P00-D2	PJTK-20-SI
026-65211-P	KH18L71	650V-232220C0-B01P00-A3	PJTM-20-NBR-G1
026-65215-P	KH18L71X	650V-232220C0-B01W00-B3	PJTM-20-NBR-G1
026-65221-P	KH18LCFX	650V-232280C0-B01P00-A3	PJTM-20-SI-G1
026-65247-0	KH18LPTFE71	650V-232280C0-B01P00-B3	PJTM-20-SI-G1
026-65350-G	KH18LX	650V-232280C0-B01P07-B3	PJTM-30-NBR-G1
026-65350-H	KH18ZL	650V-232280C0-B01W00-B3	PJTM-30-NBR-G1
026-65443-T	KH18ZL71	650V-232420D0-001P00-B3	PJTM-30-NBR-G2
026-65451-H	KH1CFX	650V-232420D0-B01P00-A3	PJTM-30-NBR-G2
026-65452-G	KH1NPT71X	650V-232540D0-001W00-B3	PJTM-30-SI-G1
026-65452-H	KH1NPTX	650V-232680D0-B01P00-F3	PJTM-30-SI-G1
026-65488-H	KH1PTFE/FKMX	650V-233104F2-001P00-D3	PJTM-30-SI-G2
026-65495-0	KH1X	650V-233130F1-001P00-B3	PJTM-30-SI-G2
026-65499-H	KH20A33S	650V-233154F1-B02P00-A3	PJTM-40-NBR-G1
026-65506-G	KH20A63S	650V-43115020-B01P00-A1	PJTM-40-NBR-G1
026-65506-H	KH20B1V63S	650V-43115020-B01P00-A2	PJTM-40-NBR-G2
026-65519-H	KH20B2V33SM	650V-43115020-B01P00-B2	PJTM-40-NBR-G2
026-65572-G	KH20B2V63SM	650V-43115020-B01P00-D2	PJTM-40-SI-G1
026-65572-H	KH20S	650V-43115020-B01P00-F2	PJTM-40-SI-G1
026-65669-H	KH20S71	650V-43115020-BF1P00-A0	PJTM-40-SI-G2
026-65670-H	KH20S71X	650V-43115020-BF1P00-A1	PJTM-40-SI-G2
026-65673-5	KH20SCFX	650V-43115020-BF1P00-A2	PJTM-50-NBR-G1
026-65677-H	KH20SX	650V-43115020-BF1P00-B2	PJTM-50-NBR-G1
026-65685-H	KH20ZS	650V-43115020-BF1P00-D2	PJTM-50-NBR-G2
026-65686-G	KH20ZS71	650V-43115020-BF1P00-E1	PJTM-50-NBR-G2
026-65687-H	KH22L	650V-43115020-BF1P00-F2	PJTM-50-SI-G1
026-65695-P	KH22L71	650V-43120020-B01P00-A1	PJTM-50-SI-G1
026-65696-P	KH22L71X	650V-43120020-B01P00-B2	PJTM-50-SI-G2
026-65715-H	KH22LCFX	650V-43120020-B01P00-F2	PJTM-50-SI-G2
026-65725-G	KH22LX	650V-43120020-BF1P00-A0	PJTM-60-NBR-G2
026-65725-H	KH22ZL	650V-43120020-BF1P00-A1	PJTM-60-NBR-G2
026-65728-G	KH22ZL71	650V-43120020-BF1P00-A2	PJTM-60-SI-G2
026-65735-H	KH25A34S	650V-43120020-BF1P00-B2	PJTM-60-SI-G2
026-65737-P	KH25A64S	650V-43120020-BF1P00-D2	PJTM-6-NBR-G1
026-65744-H	KH25B1V64S	650V-43120020-BF1P00-E0	PJTM-6-NBR-G1
026-65769-H	KH25B1V64SM	650V-43120020-BF1P00-E1	PJTM-6-NBR-M5
026-65818-G	KH25B2V34SM	650V-43125020-B01P00-A0	PJTM-6-NBR-M5
026-65818-H	KH25B2V34SU	650V-43125020-B01P00-A1	PJTM-6-SI-G1
026-65820-0	KH25B2V64SM	650V-43125020-B01P00-A2	PJTM-6-SI-G1
026-65827-G	KH25B2V64SU	650V-43125020-B01P00-B2	PJTM-6-SI-M5
026-65841-G	KH25S	650V-43125020-B01P00-D2	PJTM-6-SI-M5
026-65843-H	KH25S71	650V-43125020-B01P00-F1	PJTM-70-NBR-G2
026-65847-H	KH25S71X	650V-43125020-B01P00-F2	PJTM-70-NBR-G2
026-65860-G	KH25SCFX	650V-43125020-BF1P00-A0	PJTM-70-SI-G2
026-65860-H	KH25SPEEK/FKM71	650V-43125020-BF1P00-A1	PJTM-70-SI-G2
026-65861-H	KH25SPTFE/FPMCFX	650V-43125020-BF1P00-A2	PJTM-80-NBR-G2
026-65867-G	KH25SX	650V-43125020-BF1P00-B2	PJTM-80-NBR-G2
026-65869-0	KH25ZS	650V-43125020-BF1P00-D1	PJTM-80-SI-G2
026-65869-5	KH25ZS71	650V-43125020-BF1P00-D2	PJTM-80-SI-G2

026-65876-H	KH271X	650V-43125020-BF1P00-E1	PJTM-8-NBR-G1
026-65887-H	KH28L	650V-43125020-BF1P00-F2	PJTM-8-NBR-G1
026-65888-H	KH28L71	650V-43135020-B01P00-A0	PJTM-8-NBR-M5
026-65893-0	KH28L71X	650V-43135020-B01P00-A1	PJTM-8-NBR-M5
026-65918-0	KH28LCF	650V-43135020-B01P00-A2	PJTM-8-SI-G1
026-65918-5	KH28LCFX	650V-43135020-B01P00-D2	PJTM-8-SI-G1
026-65925-H	KH28LX	650V-43135020-B01P00-F2	PJTM-8-SI-M5
026-65939-0	KH28ZL	650V-43135020-BF1P00-A0	PJTM-8-SI-M5
026-65942-0	KH28ZL71	650V-43135020-BF1P00-A1	PK032HM001P
026-65947-G	KH2X	650V-43135020-BF1P00-A2	PK050HM001P
026-65947-H	KH3/2-06L	650V-43135020-BF1P00-D1	PK063HM001P
026-65948-G	KH3/2-06LX	650V-43135020-BF1P00-D2	PK080HM001P
026-65948-H	KH3/2-06ZL	650V-43135020-BF1P00-E1	PK1002A001
026-65952-0	KH3/2-08L	650V-43135020-BF1P00-F2	PK102HLL01
026-65954-H	KH3/2-08LX	650V-43145020-B01P00-A0	PK102HLL05
026-65958-H	KH3/2-08S	650V-43145020-B01P00-A1	PK1502A001
026-65960-H	KH3/2-08SX	650V-43145020-B01P00-A2	PK1502A005
026-65964-G	KH3/2-08ZL	650V-43145020-B01P00-B2	PK1502AN01
026-65964-H	KH3/2-08ZS	650V-43145020-B01P00-D2	PK152HK001
026-65969-H	KH3/2-1/271X	650V-43145020-B01P00-F2	PK152HK005
026-65975-H	KH3/2-1/2CFX	650V-43145020-BF1P00-A0	PK152HLL001P
026-65976-0	KH3/2-1/2NPTX	650V-43145020-BF1P00-A1	PK152HLL01
026-65980-H	KH3/2-1/2X	650V-43145020-BF1P00-A2	PK152HLL05
026-65985-5	KH3/2-1/4CFX	650V-43145020-BF1P00-B2	PK152HLL06
026-66013-0	KH3/2-1/4X	650V-43145020-BF1P00-D2	PK160MP001
026-66015-0	KH3/2-1/8X	650V-43145020-BF1P00-E0	PK160MP001
026-66015-5	KH3/2-10L	650V-43145020-BF1P00-E1	PK180APK
026-66016-0	KH3/2-10LX	650V-43145020-BF1P00-F2	PK1A25-LB
026-66029-D	KH3/2-10S	650V-43155020-B01P00-A0	PK1A25-LB
026-66030-D	KH3/2-10SX	650V-43155020-B01P00-A1	PK2002A001
026-66031-0	KH3/2-10ZL	650V-43155020-B01P00-A2	PK2002A005
026-66035-0	KH3/2-10ZS71	650V-43155020-B01P00-B2	PK2002AN01
026-66036-H	KH3/2-11/2MSX	650V-43155020-B01P00-D2	PK202HK001
026-66050-H	KH3/2-11/4CFX	650V-43155020-B01P00-F1	PK202HK005
026-66063-T	KH3/2-11/4X	650V-43155020-B01P00-F2	PK202HLL01
026-66064-T	KH3/2-12L	650V-43155020-BF1P00-A0	PK202HLL05
026-66065-T	KH3/2-12LPTFE/FPM	650V-43155020-BF1P00-A1	PK2502A001
026-66073-C	KH3/2-12LX	650V-43155020-BF1P00-A2	PK2502A005
026-66098-H	KH3/2-12S	650V-43155020-BF1P00-B2	PK2502AN01
026-66099-H	KH3/2-12S71	650V-43155020-BF1P00-D1	PK2502MA01
026-66104-G	KH3/2-12SX	650V-43155020-BF1P00-D2	PK2502MA01
026-66104-H	KH3/2-12ZL	650V-43155020-BF1P00-E1	PK252HK001
026-66105-0	KH3/2-12ZS	650V-43155020-BF1P00-F2	PK252HK005
026-66121-G	KH3/2-14S	650V-43155020-BF1PK0-D0	PK252HLL001P
026-66121-H	KH3/2-14SX	650V-43168030-B01P00-A1	PK252HLL01
026-66126-P	KH3/2-15L	650V-43168030-B01P00-A2	PK252HLL03
026-66128-G	KH3/2-15L71	650V-43168030-B01P00-D2	PK252HLL05
026-66128-H	KH3/2-15LX	650V-43168030-B01P00-F2	PK25VH001
026-66129-G	KH3/2-15ZL	650V-43168030-BF1P00-A0	PK3202A001
026-66129-H	KH3/2-16S	650V-43168030-BF1P00-A1	PK3202A005
026-66138-H	KH3/2-16SX	650V-43168030-BF1P00-A2	PK3202AN01
026-66139-H	KH3/2-16ZS	650V-43168030-BF1P00-D2	PK322HK001
026-66139-K	KH3/2-18L	650V-43168030-BF1P00-E1	PK322HK005

026-66140-H	KH3/2-18LCFX	650V-43168030-BF1P00-F2	PK322HLL001P
026-66143-0	KH3/2-18LPTFE-FKMX	650V-43168030-BF1PK0-D0	PK322HLL01
026-66153-0	KH3/2-18LX	650V-43190030-B01P00-A0	PK322HLL05
026-66160-0	KH3/2-18ZL	650V-43190030-B01P00-A1	PK322HLL06
026-66164-0	KH3/2-1CFX	650V-43190030-B01P00-A2	PK3510G02
026-66174-S	KH3/2-1X	650V-43190030-B01P00-B2	PK3510G02
026-66175-H	KH3/2-20S	650V-43190030-B01P00-D2	PK4002A001
026-66175-K	KH3/2-20SX	650V-43190030-B01P00-E1	PK4002A005
026-66176-S	KH3/2-20ZS	650V-43190030-B01P00-F0	PK4002AN01
026-66176-W	KH3/2-22L	650V-43190030-B01P00-F2	PK4002MA01
026-66179-G	KH3/2-22LX	650V-43190030-BF1P00-A0	PK4002MA01
026-66227-0	KH3/2-22ZL	650V-43190030-BF1P00-A1	PK402HK001
026-66257-0	KH3/2-25S	650V-43190030-BF1P00-A2	PK402HK005
026-66257-5	KH3/2-25SX	650V-43190030-BF1P00-B2	PK402HLL01
026-66268-0	KH3/2-25ZS	650V-43190030-BF1P00-D2	PK402HLL05
026-66269-5	KH3/2-28L	650V-43190030-BF1P00-E1	PK402HLL06
026-66282-H	KH3/2-28LX	650V-43190030-BF1P00-F2	PK5002A001
026-66288-P	KH3/2-28ZL	650V-43190030-BF1PK0-D0	PK5002A005
026-66288-S	KH3/2-3/4X	650V-43212030-B01P00-A0	PK5002AN01
026-66289-P	KH3/2-3/871X	650V-43212030-B01P00-A1	PK502HK001
026-66293-P	KH3/2-3/8CFX	650V-43212030-B01P00-A2	PK502HK005
026-66298-P	KH3/2-3/8X	650V-43212030-B01P00-B2	PK502HLL01
026-66302-C	KH3/2-30SX	650V-43212030-B01P00-E1	PK502HLL05
026-66302-P	KH3/471X	650V-43212030-B01P00-F2	PK6002A001
026-66302-X	KH3/4CFX	650V-43212030-BF1P00-A0	PK6002A005
026-66307-P	KH3/4NPT71X	650V-43212030-BF1P00-A1	PK6002AN01
026-66308-P	KH3/4NPTX	650V-43212030-BF1P00-A2	PK602HK001
026-66309-P	KH3/4PTFE/FKMX	650V-43212030-BF1P00-B2	PK602HK005
026-66313-0	KH3/4X	650V-43212030-BF1P00-D2	PK602HLL01
026-66314-0	KH3/871X	650V-43212030-BF1P00-E1	PK602HLL05
026-66338-G	KH3/8CFX	650V-43212030-BF1P00-E2	PK7023H001
026-66338-H	KH3/8NPT71X	650V-43212030-BF1P00-F2	PK702HK001
026-66340-0	KH3/8NPTPOM/FKM71X	650V-43212030-BF1PK0-D0	PK702HK005
026-66347-G	KH3/8NPTX	650V-43216030-B01P00-A0	PK702HLL01
026-66348-H	KH3/8PTFE/FPMCFX	650V-43216030-B01P00-A1	PK702HLL05
026-66349-H	KH3/8X	650V-43216030-B01P00-A2	PK8002A001
026-66353-0	KH30S	650V-43216030-B01P00-B2	PK8002A005
026-66356-U	KH30S71	650V-43216030-B01P00-D2	PK8002AN01
026-66363-H	KH30S71X	650V-43216030-B01P00-F0	PK8002AN05
026-66367-P	KH30SCFX	650V-43216030-B01P00-F2	PK8002AN05-RAST
026-66373-P	KH30SX	650V-43216030-BF1P00-A0	PK8002MA01
026-66380-H	KH30ZS	650V-43216030-BF1P00-A1	PK8002MA01
026-66381-0	KH30ZS71	650V-43216030-BF1P00-A2	PK802HK001
026-66383-H	KH32-48CF	650V-43216030-BF1P00-B2	PK802HK005
026-66391-0	KH32A35S	650V-43216030-BF1P00-D0	PK802HLL01
026-66400-P	KH32A65S	650V-43216030-BF1P00-D2	PK802HLL05
026-66401-H	KH32B1V65S	650V-43216030-BF1P00-E1	PK9002A001
026-66409-G	KH32B1V65SM	650V-43216030-BF1P00-E2	PK9002A005
026-66409-H	KH32B3V35SM	650V-43216030-BF1P00-F2	PK9002AN01
026-66411-G	KH35L	650V-43216030-BF1PK0-D0	PK9002AN05
026-66411-H	KH35L71	650V-432160C0-B01P00-A0	PK902HK001
026-66421-G	KH35L71X	650V-432160C0-B01P00-A3	PK902HK005
026-66421-H	KH35LCF	650V-432160C0-B01P00-B3	PK902HLL01

026-66426-H	KH35LDN25	650V-432160C0-B01P00-D3	PK902HLL05
026-66431-V	KH35LDN25X	650V-432160C0-B01P00-F3	PK9202A001
026-66448-G	KH35LX	650V-432160C0-B01P07-B3	PK9202A005
026-66448-H	KH35ZL	650V-432160C0-B01W00-A3	PK9202AN01
026-66455-H	KH35ZL71	650V-432160C0-B02P00-A3	PK922HK001
026-66459-H	KH35ZLDN25	650V-432230C0-B01P00-A0	PK922HK005
026-66460-0	KH364-100CF	650V-432230C0-B01P00-A3	PK922HLL01
026-66464-H	KH38S	650V-432230C0-B01P00-B3	PK9402A001
026-66466-U	KH38S71	650V-432230C0-B01P00-D3	PK9402AN01
026-66472-G	KH38S71X	650V-432230C0-B01P00-F0	PKF35
026-66478-G	KH38SCFX	650V-432230C0-B01P00-F3	PKF35
026-66481-0	KH38SDN25X	650V-432230C0-B01W00-A3	PKFG-75-NBR
026-66496-0	KH38SX	650V-432230C0-B01W00-B3	PKFG-75-NBR
026-66497-G	KH38ZS	650V-432230C0-B01W07-B3	PKG-60-NBR
026-66497-H	KH38ZS71	650V-432230C0-B02P00-A0	PKG-60-NBR
026-66497-K	KH4/2-1/2PT/FPM71X	650V-432230C0-B02P00-A3	PKG-C-6710
026-66502-H	KH40-63CF	650V-432230C0-B02P00-F3	PKG-C-6710
026-66509-0	KH40-63SS	650V-432300C0-B01P00-A0	PKGF-75-NBR-G3
026-66524-A	KH40A36S	650V-432300C0-B01P00-A3	PKGF-75-NBR-G3
026-66524-G	KH40A66S	650V-432300C0-B01P00-B3	PKJF-40-NBR-G3
026-66524-H	KH40B1V66S	650V-432300C0-B01P00-D3	PKJF-40-NBR-G3
026-66525-P	KH40B1V66SM	650V-432300C0-B01P00-F3	PKJF-80-NBR-G3
026-66531-0	KH40B3V36SM	650V-432300C0-B01T00-A3	PKJF-80-NBR-G3
026-66532-G	KH40B5V160	650V-432300C0-B01W00-A3	PKJG-50-NBR
026-66532-H	KH42L	650V-432300C0-B01W00-B3	PKJG-50-NBR
026-66535-0	KH42L71	650V-432300C0-B01W07-B3	PKJG-80-NBR
026-66536-0	KH42L71X	650V-432300C0-B02P00-A3	PKJG-80-NBR
026-66541-P	KH42LCF	650V-432310D0-001P00-A3	PKJT-80-NBR-G3
026-66548-H	KH42LDN25X	650V-432310D0-001P00-B3	PKJT-80-NBR-G3
026-66563-G	KH42LSP104X	650V-432310D0-001P00-D3	PL01-02-70
026-66563-H	KH42LX	650V-432310D0-001W00-B3	PL01-02-70
026-66566-H	KH42ZL	650V-432310D0-B01P00-A3	PL01-02-80
026-66580-G	KH42ZL71	650V-432380D0-001P00-A0	PL01-02-80
026-66584-0	KH440-48CF	650V-432380D0-001P00-A3	PL02-01-70
026-66587-G	KH448-63CF	650V-432380D0-001P00-B3	PL02-01-70
026-66587-H	KH448-63SS	650V-432380D0-001P00-D3	PL04435
026-66600-0	KH48-76-71LDCF	650V-432380D0-001P00-F3	PL04435
026-66602-0	KH48-76CF	650V-432380D0-001W00-A3	PL07743-47
026-66606-0	KH5/8X	650V-432380D0-001W00-B3	PL07743-47
026-66607-H	KH50A3871	650V-432380D0-002P00-A0	PL08101
026-66608-0	KH50A38S	650V-432380D0-002P00-A3	PL08101
026-66617-H	KH50A6871	650V-432380D0-B01P00-A0	PL08101
026-66619-G	KH50A68S	650V-432380D0-B01P00-A3	PL08101
026-66625-P	KH50B1V68S	650V-432380D0-B01P00-D3	PL08185
026-66630-0	KH50B1V68SM	650V-432380D0-B01P00-F3	PL08185
026-66636-0	KH50B3V38SM	650V-432380D0-B01W00-A3	PL08187-10
026-66642-H	KH50B3V38SU	650V-432380D0-B01W00-B3	PL08187-10
026-66685-0	KH624-38CF	650V-432380D0-B01W07-B3	PL08200
026-66706-H	KHBLOCKDN20	650V-432450D0-001P00-A0	PL08200
026-66707-H	KHBLOCKDN20CF	650V-432450D0-001P00-A3	PL08267
026-66728-G	KHBLOCKDN50	650V-432450D0-001P00-B3	PL08267
026-66728-H	KHBLOCKDN6	650V-432450D0-001P00-D3	PL08591
026-66730-H	KHDN1222X1.5ORLOCKX	650V-432450D0-001P00-F3	PL08591

026-66751-G	KHDN1627X2ORLOCKX	650V-432450D0-001W00-B3	PL08591
026-66761-G	KHDN25BALLX	650V-432450D0-002P00-A3	PL08591
026-66761-H	KHDN25CAMPLATEX	650V-432450D0-B01P00-A0	PL08598
026-66771-K	KHDN25DICHSP110X	650V-432450D0-B01P00-A3	PL08598
026-66788-P	KHDN25STEMX	650V-432450D0-B01P00-B3	PL08649-00
026-66803-0	KHG3/2-1/2X	650V-432450D0-B01P00-D3	PL08649-00
026-66804-0	KHG3/2-1/4X	650V-432450D0-B01P00-F3	PL08649-00
026-66806-0	KHG3/2-3/8X	650V-432450D0-B01W00-B3	PL08649-00
026-66809-0	KHHANDLE.SIZE10X	650V-432450D0-B02P00-A3	PL08930
026-66827-T	KHHANDLE.SIZE7X	650V-432590D0-001P00-A0	PL08930
026-66828-U	KHHANDLE.SIZE8X	650V-432590D0-001P00-A3	PL08930
026-66835-H	KHLOCKINGD.SIZE1X	650V-432590D0-001P00-D3	PL08930
026-66841-0	KHLOCKINGD.SIZE2X	650V-432590D0-001P00-F3	PL09445
026-66862-0	KHLOCKINGD.SIZE3X	650V-432590D0-001W00-A3	PL09445
026-66876-H	KHLOCKINGD.SIZE571X	650V-432590D0-001W00-B3	PL10G04DSS
026-66883-0	KHLOCKINGD.SIZE5X	650V-432590D0-002P00-A3	PL10G04DSS
026-66898-H	KHLOCKINGD.SIZE671X	650V-432590D0-002P00-F3	PL10G04WSS
026-66913-G	KHLOCKINGD.SIZE6X	650V-432590D0-B01P00-A3	PL10G04WSS
026-66913-H	KHMOUNT.SETDN8/10X	650V-432590D0-B01P00-D3	PL1-1/4-70
026-66917-P	KHP3/2DN40X	650V-432590D0-B01P00-F3	PL1-1/4-70
026-66949-0	KHPDN25-420BX	650V-432590D0-B01W00-B3	PL1-1/4-80
026-66950-H	KH-R-24-38CF	650V-432590D0-B02P00-A0	PL1-1/4-80
026-66950-K	KH-R-324-38-71LDCF	650V-432590D0-B02P00-A3	PL1100
026-66961-P	KH-R-32-48CF	650V-432590E0-001P00-A3	PL1100-DUMP
026-66963-H	KH-R-32-48SS	650V-432590E0-001P00-D3	PL12
026-66970-H	KH-R-624-38CF	650V-432590E0-B01P00-A3	PL125MMB01
026-66994-G	KH-R-624-38SS	650V-432590E0-B01W00-B3	PL1-3/8-70
026-66994-H	KH-R-632-48CF	650V-432730E0-001P00-A3	PL1-3/8-70
026-66995-H	KHRP1MSX	650V-432730E0-001P00-B3	PL15169
026-66996-G	KIR-B	650V-432730E0-001P00-D3	PL15169
026-66996-H	KIR-B	650V-432730E0-001P00-F3	PL15204
026-67022-H	KIT/S90568	650V-432730E0-001W00-B3	PL15204
026-67023-H	KIT/S90568	650V-432730E0-002P00-A3	PL15204
026-67024-0	KITAT	650V-432730E0-B01P00-A3	PL15204
026-67031-B	KITATK	650V-432730E0-B01P00-D3	PL15217
026-67031-P	KIT-B2LJ2-B	650V-432730E0-B01P00-F3	PL15217
026-67032-0	KIT-B2LJ2-SS	650V-432730E0-B01W00-A3	PL15217
026-67032-5	KIT-B2LJ-B	650V-432730E0-B01W00-B3	PL15217
026-67033-0	KIT-B2LJ-SS	650V-432730E0-B02P00-A3	PL15218
026-67034-0	KIT-B2XJ2-B	650V-432730E0-B02P00-F3	PL15218
026-67036-0	KIT-B2XJ2-SS	650V-432870E0-001P00-A0	PL15253
026-67039-0	KIT-B2XJ-SS	650V-432870E0-001P00-A3	PL15253
026-67040-0	KIT-B6LJ2-B	650V-432870E0-001P00-B3	PL15253
026-67040-5	KIT-B6LJ2-SS	650V-432870E0-001P00-D3	PL15253
026-67042-0	KIT-B6LJ-B	650V-432870E0-001P00-F3	PL15254
026-67043-0	KIT-B6LJ-SS	650V-432870E0-001W00-B3	PL15254
026-67044-0	KIT-B6LPKR-SS	650V-432870E0-B01P00-A3	PL15394
026-67044-5	KIT-B6XJ2-B	650V-432870E0-B01P00-D3	PL15394
026-67045-0	KIT-B6XJ2-SS	650V-432870E0-B01P00-F3	PL15450
026-67046-0	KIT-B6XJ-B	650V-432870E0-B02P00-F3	PL15450
026-67047-0	KIT-B6XJ-SS	650V-433105F1-001P00-A3	PL15531
026-67047-5	KIT-B8LJ2-B	650V-433105F1-001P00-B3	PL15531
026-67048-0	KIT-B8LJ2-SS	650V-433105F1-B01P00-B3	PL15531

026-67049-0	KIT-B8LJ-B	650V-433105F2-001P00-A3	PL15531
026-67050-0	KIT-B8LJ-SS	650V-433105F2-001P00-D3	PL15534
026-67051-0	KIT-B8XJ2-B	650V-433105F2-001P00-F0	PL15534
026-67052-0	KIT-B8XJ2-SS	650V-433105F2-001P00-F3	PL15616
026-67053-0	KIT-B8XJ-SS	650V-433105F2-002P00-F3	PL15616
026-67054-0	KIT-C12-100-V	650V-433105F2-B01P00-A3	PL15616
026-67055-0	KIT-C12-10-V	650V-433105F2-B01P00-F3	PL15616
026-67055-5	KIT-C12-1-V	650V-433105F2-B02P00-A3	PL15717
026-67056-0	KIT-C12-25-V	650V-433145F1-001P00-A3	PL15717
026-67057-0	KIT-C12-50-V	650V-433145F1-001P00-B3	PL15828-00
026-67058-0	KIT-C12-5-BN	650V-433145F1-002P00-A3	PL15828-00
026-67058-5	KIT-C12-5-V	650V-433145F1-B01P00-A0	PL15828-00
026-67060-0	KIT-C12-75-V	650V-433145F1-B01P00-A3	PL15828-00
026-67061-0	KIT-C16-1/3-BN	650V-433145F2-001P00-A3	PL15900
026-67061-5	KIT-C16-1/3-EPR	650V-433145F2-001P00-D3	PL15900
026-67062-0	KIT-C16-1/3-V	650V-433145F2-001P00-F3	PL15900
026-67063-0	KIT-C16-100-EPR	650V-433145F2-001P83-D3	PL15900
026-67063-5	KIT-C16-10-V	650V-433145F2-B01P00-A3	PL16
026-67064-0	KIT-C16-1-BN	650V-433156F2-001P00-A3	PL16030
026-67065-0	KIT-C16-1-V	650V-433156F2-001P00-F3	PL16030
026-67066-0	KIT-C16-25-V	650V-433180F1-001P00-A3	PL16031
026-67067-0	KIT-C16-50-BN	650V-433180F1-B01P00-A3	PL16031
026-67067-5	KIT-C16-50-V	650V-433180F1-B01P00-B3	PL16031
026-67068-0	KIT-C16-5-BN	650V-433180F2-001P00-A3	PL16031
026-67081-H	KIT-C16-5-EPR	650V-433180F2-001P00-D3	PL16043
026-67085-A	KIT-C16-5-V	650V-433180F2-001P00-F3	PL16043
026-67119-5	KIT-C16-75-BN	650V-433180F2-B01P00-A3	PL16043
026-67120-H	KIT-C2-1/3-V	6511-RS232-00-G	PL16043
026-67128-H	KIT-C2-100-V	6511-RS232-11	PL16066
026-67129-P	KIT-C2-10-EPR	6511-TTL-00-G	PL16066
026-67138-0	KIT-C2-10-V	6513-EI00-00	PL16165
026-67139-G	KIT-C2-1-BN	6513-EI00-11	PL16165
026-67146-H	KIT-C2-1-EPR	6513-PROF-00	PL16165-0G
026-67152-H	KIT-C2-1-V	6514-00	PL16165-0G
026-67162-H	KIT-C2-25-V	651FIL	PL16182
026-67167-G	KIT-C2-50-V	651FIL	PL16182
026-67190-P	KIT-C2-5-EPR	6521 06 10WP2	PL16282
026-67194-T	KIT-C2-5-V	6521 06 10WP3	PL16282
026-67196-0	KIT-C2-75-EPR	6521 06 13WP3	PL16481
026-67215-P	KIT-C2-75-V	6521 06 17WP3	PL16481
026-67218-0	KIT-C4-1/3-BN	6521 08 10WP3	PL16641
026-67229-U	KIT-C4-1/3-EPR	6521 08 13WP3	PL16641
026-67236-H	KIT-C4-1/3-V	6521 08 17WP3	PL16641
026-67248-H	KIT-C4-100-BN	6521 10 13WP3	PL16641
026-67251-0	KIT-C4-100-V	6521 10 17WP3	PL16665-1D
026-67252-0	KIT-C4-10-BN	6521 10 21WP3	PL16665-1D
026-67340-P	KIT-C4-10-EPR	6521 12 17WP3	PL16666-1D
026-67357-S	KIT-C4-10-V	6521 12 21WP3	PL16666-1D
026-67373-H	KIT-C4-1-BN	6521 56 10WP3	PL16669
026-67398-7	KIT-C4-1-EPR	6521 56 11WP3	PL16669
026-67398-C	KIT-C4-1-V	6521 56 13WP3	PL16672-0Z
026-67398-U	KIT-C4-1-V-C3	6521 56 14WP3	PL16672-0Z
026-67423-0	KIT-C4-25-BN	6521 56 17WP3	PL16675

026-67432-H	KIT-C4-25-EPR	6521 56 18WP3	PL16675
026-67453-0	KIT-C4-25-V	6521 60 13WP3	PL16675-00
026-67459-H	KIT-C4-50-BN	6521 60 14WP3	PL16675-00
026-67510-0	KIT-C4-50-EPR	6521 60 17WP3	PL16677-00
026-67514-U	KIT-C4-50-V	6521 60 18WP3	PL16677-00
026-67516-H	KIT-C4-5-BN	6521 62 17WP3	PL16679
026-67535-H	KIT-C4-5-EPR	6521 62 18WP3	PL16679
026-67592-H	KIT-C4-5-V	6521 62 21WP3	PL16684
026-67599-G	KIT-C4-75-BN	6521 62 22WP3	PL16684
026-67599-H	KIT-C4-75-EPR	6521-00	PL16755
026-67601-H	KIT-C4-75-V	6523-PROF-00	PL16755
026-67624-0	KIT-C6-1/3-EPR	652FIL	PL16790
026-67641-H	KIT-C6-1/3-V	652FIL	PL16790
026-67694-P	KIT-C6-100-EPR	6530U	PL16790
026-67698-P	KIT-C6-100-V	6537P0043	PL16790
026-67708-0	KIT-C6-10-BN	6537P0046	PL16790-47
026-67711-0	KIT-C6-10-EPR	6537P0047	PL16790-47
026-67712-0	KIT-C6-10-V	6537P0048	PL16792
026-67729-S	KIT-C6-1-BN	6537P0048	PL16792
026-67787-G	KIT-C6-1-EPR	6537P0049	PL16792
026-67787-H	KIT-C6-1-V	6537P0051	PL16792
026-67798-G	KIT-C6-25-BN	6537P0052	PL16796-30-48
026-67821-H	KIT-C6-25-EPR	6537P0057	PL16796-30-48
026-67824-H	KIT-C6-25-V	6537P0058	PL16796-5-48
026-67848-A	KIT-C6-50-EPR	6537P0058	PL16796-5-48
026-67855-H	KIT-C6-50-V	6537P0059	PL16798-00
026-67895-H	KIT-C6-5-BN	6537P0059	PL16798-00
026-67938-H	KIT-C6-5-V	6539A	PL16798-00
026-67942-H	KIT-C6-75-EPR	6-554-N552-90	PL16798-00
026-67944-G	KIT-C6-75-V	6579 06 10WP3	PL16800-1E
026-67944-H	KIT-C8-1/3-BN	6579 06 13WP2	PL16800-1E
026-67949-0	KIT-C8-1/3-EPR	6579 06 13WP3	PL16802
026-67962-P	KIT-C8-1/3-V	6579 06 17WP3	PL16802
026-67973-G	KIT-C8-100-BN	6579 56 10WP3	PL16817
0266L	KIT-C8-100-EPR	6579 56 11WP3	PL16817
026-70001-H	KIT-C8-100-V	6579 56 13WP3	PL16820
026-70013-G	KIT-C8-10-BN	6579 56 14WP3	PL16820
026-70046-0	KIT-C8-10-EPR	6579 56 17WP3	PL16821
026-70051-0	KIT-C8-10-V	6579 56 18WP3	PL16821
026-70092-H	KIT-C8-1-BN	6579 60 13WP3	PL16821
026-70096-P	KIT-C8-1-EPR	6579 60 14WP3	PL16821
026-70100-P	KIT-C8-1-V	6579 60 17WP3	PL16828
026-70133-0	KIT-C8-25-BN	6579 60 18WP3	PL16828
026-70133-5	KIT-C8-25-V	6-5C5OMXSS	PL16830
026-70134-0	KIT-C8-50-BN	6-5F5OMXSS	PL16830
026-70134-5	KIT-C8-50-EPR	6-5HMTXSS	PL16832
026-70182-H	KIT-C8-50-V	65KSIW13MVX	PL16832
026-70191-0	KIT-C8-5-BN	65KSIW17MVX	PL16840
026-70192-0	KIT-C8-5-EPR	65KSTF06MVX	PL16840
026-70204-0	KIT-C8-5-V	65KSTF09MVX	PL16859
026-70212-H	KIT-C8-75-BN	65-P-14	PL16859
026-70216-0	KIT-C8-75-V	65P-25-02H	PL16917-1E
026-70228-H	KIT-CB12-120-PF-SS	65RAM1KIT	PL16917-1E

026-70229-H	KIT-F12-100-EPR	65SSIW13MXX	PL16927
026-70231-G	KIT-F12-10-EPR	65SSIW17MXX	PL16927
026-70269-H	KIT-F12-10-V	65SSTF06MXX	PL16946
026-70300-0	KIT-F12-1-EPR	65SSTF09MXX	PL16946
026-70300-5	KIT-F12-1-V	6-5TRMTXS	PL16946-0Y
026-70301-0	KIT-F12-450-V	6-5TRMTXSS	PL16946-0Y
026-70301-5	KIT-F12-50-V	6-6 AH2LZ-SS	PL16959
026-70302-0	KIT-F12-5-V	6-6 B2HF-B	PL16959
026-70309-H	KIT-F16-100-V	6-6 B2HF-SS	PL16959-48
026-70334-V	KIT-F16-10-EPR	6-6 C5BZ-SS	PL16959-48
026-70337-H	KIT-F16-10-V	6-6 CBU-S	PL16965-00
026-70378-G	KIT-F16-250-EPR	6-6 CBZ-B	PL16965-00
026-70379-G	KIT-F16-250-V	6-6 CBZ-SS	PL16965-0U
026-70379-H	KIT-F16-450-V	6-6 CCCTX-S	PL16965-0U
026-70380-0	KIT-F16-50-BN	6-6 CLO-S	PL16965-48
026-70393-H	KIT-F16-50-V	6-6 CTX-B	PL16965-48
026-70396-G	KIT-F2-100-V	6-6 CTX-S	PL16969
026-70396-H	KIT-F2-10-BN	6-6 DBZ-SS	PL16969
026-70398-0	KIT-F2-10-EPR	6-6 DTX-B	PL16969-0G
026-70402-P	KIT-F2-10-V	6-6 DTX-S	PL16969-0G
026-70403-P	KIT-F2-1-BN	6-6 EBMP7-SS	PL16969-0K
026-70427-P	KIT-F2-1-EPR	6-6 EBZ-B	PL16969-0K
026-70441-H	KIT-F2-1-V	6-6 EBZ-SS	PL16970
026-70442-H	KIT-F2-50-V	6-6 F6X-S	PL16970
026-70443-H	KIT-F2-5-V	6-6 FBMP7-SS	PL16970-48
026-70454-H	KIT-F4-100-BN	6-6 FBU-S	PL16970-48
026-70465-H	KIT-F4-100-EPR	6-6 FBU-SS	PL16977
026-70468-B	KIT-F4-100-V	6-6 FBZ-B	PL16977
026-70476-0	KIT-F4-10-BN	6-6 FBZ-SS	PL16986
026-70511-0	KIT-F4-10-EPR	6-6 FE-B	PL16986
026-70517-G	KIT-F4-10-V	6-6 FE-SS	PL16986
026-70656-0	KIT-F4-1-BN	6-6 FE-SSHP	PL16986
026-70670-P	KIT-F4-1-EPR	6-6 FH2BZ-SS	PL16987
026-70699-H	KIT-F4-1-V	6-6 FH4BZ-B	PL16987
026-70772-A	KIT-F4-250-EPR	6-6 FH4BZ-SS	PL16996
026-70772-H	KIT-F4-250-V	6-6 FHC-B	PL16996
026-70795-H	KIT-F4-450-V	6-6 FHC-SS	PL16996-0Z
026-70800-G	KIT-F4-50-BN	6-6 FHC-SSHP	PL16996-0Z
026-70800-H	KIT-F4-50-EPR	6-6 FHOA-SS	PL17002
026-70817-T	KIT-F4-50-V	6-6 FLO-S	PL17002
026-70828-0	KIT-F4-5-BN	6-6 FLO-SS	PL17002-00
026-70828-5	KIT-F4-5-EPR	6-6 FTX-S	PL17002-00
026-70848-G	KIT-F4-5-V	6-6 FVE-SS	PL17002-48
026-70860-H	KIT-F6-100-BN	6-6 FW-SS	PL17002-48
026-70890-P	KIT-F6-100-V	6-6 G6X-S	PL17003-00
026-70903-P	KIT-F6-10-BN	6-6 GBU-S	PL17003-00
026-70906-V	KIT-F6-10-EPR	6-6 GBZ-SS	PL17003-48
026-70909-H	KIT-F6-10-V	6-6 GOA-SS	PL17003-48
026-70916-H	KIT-F6-1-BN	6-6 GTX-S	PL17008
026-70923-0	KIT-F6-1-V	6-6 GW-SS	PL17008
026-70941-H	KIT-F6-250-V	6-6 HBMP7-SS	PL17161
026-70942-0	KIT-F6-450-V	6-6 HBZ-B	PL17161
026-70949-H	KIT-F6-50-EPR	6-6 HBZ-SS	PL17161

026-70955-5	KIT-F6-50-V	6-6 MCN-B	PL17161
026-70959-0	KIT-F6-5-BN	6-6 MCN-HC	PL17277
026-70968-0	KIT-F6-5-EPR	6-6 MCN-SS	PL17277
026-70970-0	KIT-F6-5-V	6-6 ME-B	PL17277
026-70976-H	KIT-F8-100-BN	6-6 ME-SS	PL17277
026-71036-P	KIT-F8-100-EPR	6-6 ME-SSHP	PL17323
026-71037-P	KIT-F8-100-V	6-6 MHLN-3.0-SSHP	PL17323
026-71045-H	KIT-F8-10-BN	6-6 MHLN-4.0-SSHP	PL17324-00
026-71052-H	KIT-F8-10-EPR	6-6 MHLN-6MO 2.0	PL17324-00
026-71060-0	KIT-F8-10-V	6-6 MHLN-SS 2.0	PL17326-00
026-71064-0	KIT-F8-1-EPR	6-6 MHLN-SS 2.5	PL17326-00
026-71065-H	KIT-F8-1-V	6-6 MHLN-SS 3.0	PL17398-0Z
026-71066-G	KIT-F8-250-EPR	6-6 MHLN-SS 4.0	PL17398-0Z
026-71066-H	KIT-F8-250-V	6-6 MHN-625	PL17448-4D3
026-71069-0	KIT-F8-450-EPR	6-6 MHN-B	PL17448-4D3
026-71075-H	KIT-F8-450-V	6-6 MHN-HC	PL17450-1E
026-71095-P	KIT-F8-50-BN	6-6 MHN-M	PL17450-1E
026-71113-H	KIT-F8-50-EPR	6-6 MHN-SS	PL17450-4D5
026-71114-A	KIT-F8-50-V	6-6 MHN-SSHP	PL17450-4D5
026-71114-H	KIT-F8-5-BN	6-6 P2HF-SS	PL17468
026-71115-A	KIT-F8-5-EPR	6-6 P2LZ6-SS	PL17468
026-71115-H	KIT-F8-5-V	6-6 P2T3-SS	PL17468-30-48
026-71118-H	KIT-FR2-C99	6-6 RA-HC	PL17468-30-48
026-71122-H	KIT-FR2-KZ	6-6 RA-SS	PL17468-5
026-71123-H	KIT-FT4-100-BN	6-6 SE-B	PL17468-5
026-71124-H	KIT-FT4-100-EPR	6-6 SE-SS	PL17468-5-48
026-71125-H	KIT-FT4-100-EPR-C3	6-6 SE-SSHP	PL17468-5-48
026-71129-H	KIT-FT4-100-V	6-6 SVE-SS	PL17470
026-71130-H	KIT-FT4-10-BN	6-6 T2H2BZ-SS	PL17470
026-71143-H	KIT-FT4-10-EPR	6-6 T2HF-SS	PL17471
026-71145-H	KIT-FT4-10-V	6-6 T2HG-SS	PL17471
026-71175-0	KIT-FT4-1-BN	6-6 TRBZ-SS	PL17471-00
026-71195-C	KIT-FT4-1-EPR	6-6 VBZ-SS	PL17471-00
026-71213-0	KIT-FT4-1-V	6-6 VTX-S	PL17472
026-71222-H	KIT-FT4-250-EPR	6-6 VTX-SS	PL17472
026-71227-H	KIT-FT4-250-V	6-6 WBMP7-SS	PL17473
026-71231-P	KIT-FT4-450-V	6-6 WBZ-B	PL17473
026-71235-0	KIT-FT4-50-BN	6-6 WBZ-SS	PL17480
026-71242-5	KIT-FT4-50-EPR	6-6 X42HBMP7-SS	PL17480
026-71247-5	KIT-FT4-50-V	6-6 X6EF-S	PL17480
026-71250-H	KIT-FT4-5-BN	6-6 XH2BZ-SS	PL17480
026-71262-0	KIT-FT4-5-EPR	6-6 XHBZ-SS	PL17481
026-71264-H	KIT-FT4-5-V	6-6 ZEBW-SS	PL17481
026-71270-H	KIT-FT8-100-BN	6-6 ZELW-SS	PL17518-00
026-71275-H	KIT-FT8-100-EPR	6-6 ZHBA-SS	PL17518-00
026-71306-0	KIT-FT8-100-EPR-C3	6-6 ZHBW-SS	PL17518-0G
026-71384-U	KIT-FT8-100-V	6-6 ZHLW-SS	PL17518-0G
026-71394-H	KIT-FT8-10-BN	6-6 ZPC-B	PL17518-47
026-71451-0	KIT-FT8-10-EPR	6-6 ZPC-SS	PL17518-47
026-71455-H	KIT-FT8-10-V	6603-16-16	PL17518-48
026-71477-0	KIT-FT8-1-BN	6605-16-16	PL17518-48
026-71477-5	KIT-FT8-1-V	660R10	PL17573-00
026-71479-0	KIT-FT8-250-BN	660R10MTC	PL17573-00

026-71481-0	KIT-FT8-250-V	660R30	PL17573-05
026-71481-5	KIT-FT8-450-BN	660R30MTC	PL17573-05
026-71482-0	KIT-FT8-450-V	660R-RAC-01	PL17607
026-71483-0	KIT-FT8-50-BN	660R-RAC-02	PL17607
026-71484-0	KIT-FT8-50-EPR	6615 40 42	PL17607-0K
026-71485-0	KIT-FT8-50-V	6-6-4 JBZ-SS	PL17607-0K
026-71486-0	KIT-FT8-5-BN	6-6-4 JLZ-6MO	PL17608
026-71487-0	KIT-FT8-5-V	6-6-4 JLZ-M	PL17608
026-71488-0	KIT-HB4XK	6-6-4 JLZ-SS	PL17608-0G
026-71494-H	KIT-HB4XPKR	6-6-4 OBZ-SS	PL17608-0G
026-71586-H	KITHW	6-6-4 SBZ-SS	PL17608-48
026-71658-H	KIT-IF-R2K-V-SS	6-6-4JLZ-NNR	PL17608-48
026-71682-H	KITLHW	6-6-4JMTXSS	PL17609
026-71699-K	KIT-NP6	6657-12PL	PL17609
026-71706-H	KIT-NP6-G	6657-16PL	PL17609-0G
026-71707-H	KIT-NP6K	6657-6PL	PL17609-0G
026-71708-H	KIT-NP6K-V	6657-8PL	PL17643-00
026-71744-0	KIT-NP6-V	6659-12PL	PL17643-00
026-71767-H	KITPM	6659-16PL	PL17643-00
026-71775-H	KITPMHP	6659-6PL	PL17643-00
026-71778-0	KIT-PR4-BN	6659-8PL	PL17644
026-71785-0	KIT-PR4-EPR	6-6-6 FT-B	PL17644
026-71788-0	KIT-PR4-V	6-6-6 FT-SS	PL17644-00
026-71789-0	KIT-PR4-VT-SS	6-6-6 FT-SSHP	PL17644-00
026-71790-0	KIT-PR6-BN	6-6-6 JBMP7-SS	PL17645-00
026-71792-0	KIT-PR6-EPR	6-6-6 JBZ-B	PL17645-00
026-71792-5	KIT-PR6-V	6-6-6 JBZ-SS	PL17645-00
026-71802-P	KIT-PR6-VT-B	6-6-6 MBT-SS	PL17645-00
026-71809-H	KIT-PR6-VT-SS	6-6-6 MT-SS	PL17680
026-71835-G	KIT-R2EM-BASE-SEALS-KZ	6-6-6 MT-SSHP	PL17680
026-71835-H	KIT-R2EM-BASE-SEALS-V	6-6-6 RBZ-SS	PL17680-0G
026-71838-0	KIT-R2EMK-KZ-SS	6-6-6 RTX-S	PL17680-0G
026-71863-H	KIT-R2GC-BASE-SEALS-V	6-6-6 RTX-SS	PL17680-48
026-71874-0	KIT-R2GCK-KZ-SS	6-6-6 SBZ-SS	PL17680-48
026-71875-0	KIT-R2K-BODY-KZ-SS	6-6-6 ST-B	PL17709-0Z
026-71908-H	KIT-R2K-CART-KZ-SS	6-6-6 ST-SS	PL17709-0Z
026-71916-H	KIT-R2K-CART-KZ-SS-IF	6-6-6 STX-S	PL17725
026-71928-0	KIT-R2K-CART-V-SS	6-6-6 STX-SS	PL17725
026-71929-0	KIT-R2K-KZ-SS	6-6-6R4OMLOS	PL17817
026-71931-HL	KIT-R2K-KZ-SS-IF	6-6-6S4OMLOS	PL17817
026-71948-0	KIT-R2K-V-SS	6-6-6S4OMXS	PL17817
026-71950-0	KIT-R2K-V-SS-IF	6-6-8 S5OLO-S	PL17817
026-71952-0	KIT-RH4-BNT	6692 17 E4	PL17818
026-71956-HL	KIT-RH4-EPRT	6699 01 04	PL17818
026-71986-G	KIT-RH4-KZT	6699 01 05	PL17819
026-71986-H	KIT-RH4-NET	66AC-3	PL17819
026-71990-A	KIT-RH4SP-1500-2250	6-6C3MXS	PL17821
026-71990-H	KIT-RH4SP-2250-3000	6-6C3MXSS	PL17821
026-722211	KIT-RH4SP-3000-4000	6-6C4OMLOS	PL17822
026-732300	KIT-RH4SP-350-750	6-6C4OMLOSEPDM	PL17822
026-732301	KIT-RH4SP-4000-5000	6-6C4OMLOSS	PL17823
026-732400	KIT-RH4SP-5000-6000	6-6C4OMXS	PL17823
026-733100	KIT-RH4SP-50-350	6-6C4OMXSS	PL17828

026-733101	KIT-RH4SP-750-1500	6-6CMTXS	PL17828
026-733303	KIT-RH4-VT	6-6CMTXSS	PL17830
026-735200	KIT-RL4-EPRT	6-6F3MK4S	PL17830
026-735300	KIT-RL4-KZT	6-6F3MK4SS	PL17830
026-735400	KIT-RL4SP-100-150	6-6F3MXS	PL17830
026-742500	KIT-RL4SP-10-225	6-6F3MXSS	PL17835
026-743300	KIT-RL4SP-10-25	6-6F42EDMLOS	PL17835
026-743301	KIT-RL4SP-150-225	6-6F42EDMLOSBP	PL18040
026-743500	KIT-RL4SP-225-400	6-6F42EDMLOSBPNB	PL18040
026-753301	KIT-RL4SP-25-50	6-6F42EDMLOSEPDM	PL18040-0H
026-753400	KIT-RL4SP-50-100	6-6F42EDMLOSS	PL18040-0H
026-75503-G	KIT-RL4-VT	6-6F42EDMLOSV	PL18134-0K
026-75509-H	KIT-RV6-18	6-6F42EDMXB	PL18134-0K
026-75522-H	KITSK158/L	6-6F42EDMXS	PL18183
026-755300	KITSK161	6-6F42EDMXSBP	PL18183
026-755301	KITSKE2NR/1	6-6F42EDMXSS	PL18219-0K
026-755410	KIT-SN6K-SS	6-6F4OMXS	PL18219-0K
026-75553-0	KIT-SN6R-SS	6-6F4OMXSS	PL18247
026-75558-H	KITTHL	6-6F4OMXSV	PL18247
026-75559-5	KIT-U12-G	6-6F63MXS	PL18294
026-75564-P	KIT-U12-T	6-6F63MXSS	PL18294
026-75567-H	KIT-U16-G	6-6F642EDMLS	PL18298
026-75568-0	KIT-U6-G	6-6F642EDMLSEPDM	PL18298
026-75589-0	KIT-U6-T	6-6F642EDMLSS	PL18300
026-75608-H	KIT-V2K-SS	6-6F642EDMXS	PL18300
026-75610-0	KIT-V2N-SS	6-6F642EDMXSS	PL18302
026-75613-H	KIT-V2R-SS	6-6F64OMXS	PL18302
026-756400	KIT-V4K-B	6-6F64OMXSS	PL18303
026-75640-0	KIT-V4K-SS	6-6F6MK4S	PL18303
026-756403	KIT-V4K-V-B	6-6F6MK4SS	PL18304
026-756510	KIT-V4K-V-SS	6-6F6MXSS	PL18304
026-75651-H	KIT-V4N-B	6-6FE-6MO	PL18317
026-75657-H	KIT-V4N-SS	6-6FHC-6MO	PL18317
026-75663-H	KIT-V4N-V-B	6-6FMK4S	PL18376-48
026-75667-H	KIT-V4N-V-SS	6-6FMK4SS	PL18376-48
026-75695-0	KIT-V4R-B	6-6FMTXB	PL18451-00
026-75707-0	KIT-V4R-SS	6-6FMTXS	PL18451-00
026-75708-0	KIT-V4R-V-B	6-6FMTXSS	PL18475-00
026-75709-0	KIT-V4R-V-SS	6-6G4MXS	PL18475-00
026-75710-0	KIT-V4R-V-SS-C3	6-6G4MXSS	PL18478-00
026-75711-0	KIT-V6K-B	6-6GC GBZ-SS	PL18478-00
026-75713-0	KIT-V6K-SS	6-6GMTXSS	PL18485-00
026-75717-0	KIT-V6K-SS-C3	6-6K CBZ-SS	PL18485-00
026-75718-0	KIT-V6K-V-B	6-6K FBZ-SS	PL18497-00
026-75719-0	KIT-V6K-V-SS	6-6K GBZ-SS	PL18497-00
026-75726-H	KIT-V6N-B	6-6K MHN-SS	PL18519
026-75727-0	KIT-V6N-SS	6-6K RA-SS	PL18519
026-75742-0	KIT-V6N-V-B	6-6K T2HF-SS	PL18519
026-75747-H	KIT-V6N-V-SS	66KSIL13MEX	PL18519
026-75750-7	KIT-V6R-B	66KSIL17MEX	PL18727
026-75753-G	KIT-V6R-SS	66KSTF06MEX	PL18727
026-75753-H	KIT-V6R-V-B	66KSTF09MEX	PL18731
026-75754-G	KIT-V6R-V-SS	66P-40-02H	PL18731

026-75754-H	KIT-V8K-B	66P-50-02H	PL18888
026-75755-0	KIT-V8K-SS	6-6R FBZ-SS	PL18888
026-75756-0	KIT-V8K-V-B	6-6R MHN-B	PL18889
026-75757-0	KIT-V8K-V-SS	6-6R MHN-SS	PL18889
026-75760-0	KIT-V8N-B	6-6R RA-6MO	PL18890
026-75761-0	KIT-V8N-SS	6-6R RA-HC	PL18890
026-75765-0	KIT-V8N-V-B	6-6R RA-SS	PL18960-00
026-75766-0	KIT-V8N-V-SS	6-6RA-6MO	PL18960-00
026-75770-0	KIT-V8R-B	66SSIL13MXX	PL18986
026-75771-0	KIT-V8R-SS	66SSIL17MXX	PL18986
026-75776-0	KIT-V8R-V-B	66SSTF06MXX	PL18986-0G
026-75790-H	KIT-V8R-V-SS	66SSTF09MXX	PL18986-0G
026-75803-0	KJ147-10-10	6-6V3MXS	PL18986-0K
026-75815-G	KJ147-12-12	6-6V4OMLOS	PL18986-0K
026-75816-H	KJ147-16-16	6-6V4OMXS	PL18986-47
026-75822-G	KJ147-4-4	671-00022-0	PL18986-47
026-75836-T	KJ147-6-6	671-00026-0	PL18987-0G
026-75843-H	KJ147-8-6	671-00112-0	PL18987-0G
026-75846-H	KJ147-8-8	671-00117-0	PL18987-47
026-75865-0	KJ547-10-10	671-00236-0	PL18987-47
026-75872-5	KJ547-12-12	671-00238-0	PL18987-48
026-75875-0	KJ547-4-4	671-00244-0	PL18987-48
026-75887-H	KJ547-6-6	671-00251-0	PL18988-0G
026-75889-H	KJ547-8-6	671-00908-0	PL18988-0G
026-75890-H	KJ547-8-8	671-00912-0	PL18988-0K
026-75900-H	KJ747-10-10	671-00914-0	PL18988-0K
026-75901-0	KJ747-10-8	6710P0007	PL18988-47
026-75902-G	KJ747-12-10	671-10155-0	PL18988-47
026-75902-H	KJ747-12-12	671-10156-0	PL19001
026-75905-0	KJ747-16-16	671-10159-0	PL19001
026-75906-H	KJ747-4-4	671-10259-0	PL19001
026-75911-H	KJ747-6-4	6711Q	PL19001
026-75914-0	KJ747-6-5	671-20004-3	PL19001-00
026-75917-H	KJ747-6-6	674-00914-0	PL19001-00
026-75928-0	KJ747-8-8	6745Y	PL19018
026-75930-0	KJ7V4-12-12	6783U	PL19018
026-75931-0	KJ7V4-16-12	679-00006-0	PL19029-30-48
026-75932-T	KJ7V4-16-16	679-00036-8	PL19029-30-48
026-832400	KJ7V4-20-16	67KSIL17MVX	PL19129
026-95013-5	KJ7V4-20-20	67KSTF06MVX	PL19129
026-95021-0	KJ7V4-24-24	67KSTF09MVX	PL19152
026-95030-5	KJ7V6-20-20	67SSIL17MXX	PL19152
026-95056-0	KJ7V6-24-20	67SSTF06MXX	PL19154-19
026-95059-0	KJ7V6-24-24	67SSTF09MXX	PL19154-19
026-95066-G	KJ7VS-10-8	6-8 C5BU-S	PL19172
026-95069-0	KJ7VS-6-6	6-8 C5OLO-S	PL19172
026-95073-H	KJ7VS-8-6	6-8 C5OX-S	PL19210
026-95080-H	KJ7VS-8-8	6-8 CBZ-SS	PL19210
026-95086-H	KJ947-10-10	6-8 CLO-S	PL19221
026-95100-0	KJ947-10-8	6-8 DBZ-SS	PL19221
026-95107-H	KJ947-12-10	6-8 DELTA-316	PL19287
026-95115-0	KJ947-12-12	6-8 F5BU-S	PL19287
026-95117-P	KJ947-16-16	6-8 F5OG5-S	PL19430-00

026-95117-S	KJ947-4-4	6-8 F5OLO-S	PL19430-00
026-95121-0	KJ947-6-4	6-8 F5OX-S	PL19430-05
026-95124-G	KJ947-6-5	6-8 FBMP7-SS	PL19430-05
026-95125-0	KJ947-6-6	6-8 FBU-S	PL19560-00
026-95128-0	KJ947-8-6	6-8 FBZ-B	PL19560-00
026-95139-A	KJ947-8-8	6-8 FBZ-SS	PL19560-0K
026-95139-H	KJ9V4-12-12	6-8 FH2BZ-SS	PL19560-0K
026-95140-0	KJ9V4-16-12	6-8 FH4BZ-SS	PL19560-15
026-95142-A	KJ9V4-16-16	6-8 FLO-S	PL19560-15
026-95143-A	KJ9V4-20-16	6-8 FTX-S	PL19564
026-95145-H	KJ9V4-20-20	6-8 FW-SS	PL19564
026-95146-H	KJ9V4-24-24	6-8 G6X-S	PL19565
026-95153-A	KJ9V6-20-20	6-8 GBZ-B	PL19565
026-95160-A	KJ9V6-24-20	6-8 GBZ-SS	PL19640
026-95161-0	KJ9V6-24-24	6-8 GTX-S	PL19640
026-95164-0	KJ9VS-10-8	6-8 T2HF-SS	PL19640-00
026-95165-0	KJ9VS-6-6	6-8 T2HG-SS	PL19640-00
026-95176-H	KJ9VS-8-6	6-8 TRBZ-SS	PL19679-1M
026-95178-H	KJ9VS-8-8	6-8 V5OLO-S	PL19679-1M
026-95181-H	KJC47-10-10	6-8 V5OX-S	PL19755-00
026-95181-K	KJC47-10-8	6-8 VTX-S	PL19755-00
026-95187-H	KJC47-12-10	6-8 X42HBMP7-SS	PL19755-05
026-95188-A	KJC47-12-12	6-8 ZHBA-SS	PL19755-05
026-95190-A	KJC47-12-8	6-8 ZHBF5-SS	PL19755-5-05
026-95194-H	KJC47-16-12	6-8 ZHLS-SS	PL19755-5-05
026-95195-0	KJC47-16-16	6-8 ZPC-SS	PL19765-05
026-95195-5	KJC47-4-4	680370-6	PL19765-05
026-95199-0	KJC47-6-4	681-10	PL19801-00
026-95200-A	KJC47-6-5	681-12	PL19801-00
026-95205-H	KJC47-6-6	681-16	PL19801-05
026-95206-H	KJC47-8-4	6811FIL	PL19801-05
026-95207-H	KJC47-8-6	6811FIL	PL19802-00
026-95208-H	KJC47-8-8	6812FIL	PL19802-00
026-95228-G	KJCV4-12-12	6812FIL	PL19802-05
026-95228-H	KJCV4-12-16	6813FIL	PL19802-05
026-95235-H	KJCV4-16-12	6813FIL	PL19807-05
026-95237-H	KJCV4-16-16	681-4	PL19807-05
026-95240-H	KJCV4-20-16	681-5	PL19820
026-95254-H	KJCV4-20-20	681-6	PL19820
026-95255-H	KJCV4-24-24	6816FIL	PL19826
026-95256-H	KJCV6-20-20	6816FIL	PL19826
026-95257-H	KJCV6-24-20	681-8	PL19841-00
026-95258-H	KJCV6-24-24	681DB-10	PL19841-00
026-95259-H	KJCVS-10-8	681DB-12	PL19841-05
026-95271-0	KJCVS-6-6	681DB-16	PL19841-05
026-95280-H	KJCVS-8-6	681DB-4	PL19842-00
026-95283-0	KJCVS-8-8	681DB-5	PL19842-00
026-95287-P	KJM47-10-8	681DB-6	PL19842-05
026-95294-0	KJM47-12-10	681DB-8	PL19842-05
026-95295-0	KJM47-12-12	6821-00200	PL19862
026-95308-A	KJM47-16-12	6821-00200	PL19862
026-95309-A	KJM47-16-16	6821-01000	PL19899
026-95329-H	KJM47-20-16	6821-01000	PL19899

026-95345-P	KJM47-4-4	6822-00300	PL19899-05
026-95352-0	KJM47-6-4	6822-00300	PL19899-05
026-95354-H	KJM47-6-5	6822-00400	PL19910-00
026-95357-B	KJM47-6-6	6822-00400	PL19910-00
026-95357-P	KJM47-8-6	6822-00500	PL19910-05
026-95359-0	KJM47-8-8	6822-00500	PL19910-05
026-95361-H	KJS47-10-10	6822-00585	PL19916-05
026-95368-0	KJS47-10-8	6822-00585	PL19916-05
026-95374-0	KJS47-12-10	6822-00590	PL19918
026-95375-0	KJS47-12-12	6822-00590	PL19918
026-95376-0	KJS47-16-16	6822-00635	PL20380
026-95377-0	KJS47-4-4	6822-00635	PL20380
026-95378-0	KJS47-6-5	6822-00675	PL20381
026-95381-H	KJS47-6-6	6822-00675	PL20381
026-95383-0	KJS47-8-6	6822-00680	PL20392
026-95383-5	KJS47-8-8	6822-00680	PL20392
026-95384-H	KJSV4-20-16	6822-00735	PL20396
026-95407-K	KJSV4-20-20	6822-00735	PL20396
026-95418-C	KK12.7	6822-00835	PL20870
026-95429-H	KK2*RP485/TS8000-01.0-V	6822-00835	PL20870
026-95434-0	KK2*RP485/TS8000-03.2-V	6822-00900	PL21199
026-95435-0	KK26.302	6822-00900	PL21199
026-95436-0	KK26.302	6822-01000	PL21324
026-95437-0	KK26.305	6822-01000	PL21324
026-95451-H	KK26.305	6822-01200	PL21379
026-95463-H	KK28.302	6822-01200	PL21379
026-95464-7	KK28.302	6822-01250	PL21380
026-95470-H	KK28.302	6822-01250	PL21380
026-95474-0	KK28.302	6822-01400	PL21381
026-95485-0	KK28.305	6822-01400	PL21381
026-95487-H	KK28.305	6822-02400	PL21424
026-95488-0	KK29.302	6822-02400	PL21424
026-95508-G	KK29.302	6822-02500	PL21425
026-95515-H	KK3*CAN635/637COM2E30.4V	6822-02500	PL21425
026-95517-0	KK30.302	6822-02530	PL21426
026-95518-P	KK30.302	6822-02530	PL21426
026-95534-G	KK31.302	6822-02600	PL21439
026-95535-G	KK31.302	6822-02600	PL21439
026-95538-H	KK4*CAN635/637COM2E02.86V	6822-02700	PL2-3/8-70
026-95539-H	KK4BLAU	6822-02700	PL2-3/8-70
026-95543-H	KK5*CAN635/637COM2E02.98V	6822-02950	PL2-3/8-80
026-95545-W	KK631X40/41-SUBD09-00.3	6822-02950	PL2-3/8-80
026-95555-H	KK6BLAU	6822-03650	PL30029
026-95556-H	KK6ROT	6822-03650	PL30029
026-95557-G	KK8BLAU	6823-00300	PL30034
026-95559-P	KKAGFBCAN/IBTTCAN-12.0V	6823-00300	PL30034
026-95577-H	KKBCD6CAN/CAN635/7-02.0V	6823-00400	PL30035
026-95579-H	KKBCD6CAN/CAN635/7-04.0V	6823-00400	PL30035
026-95583-H	KKCAN*2638B/SUB09B-0.12	6823-00540	PL30036
026-95584-0	KKCAN*3637F/16TE-0.36	6823-00540	PL30036
026-95603-0	KKCAN*3638B/SUB09B-0.19	6823-00585	PL30056-00
026-95604-H	KKCAN/IBTT-CAN-01.0-V	6823-00585	PL30056-00
026-95617-H	KKCAN/IBTT-CAN-05.0-V	6823-00590	PL30085

026-95624-H	KKCAN/IBTT-CAN-20.0-V	6823-00590	PL30085
026-95629-0	KKCAN/IBTT-CAN-25.0-V	6823-00635	PL30095
026-95636-U	KKCAN2*631X20/21-00.1-V	6823-00635	PL30095
026-95660-0	KKCAN2*631X20/21-10.0-V	6823-00675	PL30180
026-95678-H	KKCAN2*631X20/21-13.0-V	6823-00675	PL30180
026-95682-0	KKCAN631X20/21.E-02.0-V	6823-00680	PL3-1/2-70
026-95683-H	KKCAN631X20/21.E-10.0-V	6823-00680	PL3-1/2-70
026-95688-G	KKCAN635/637COM2.E-01.0-V	6823-00735	PL3-1/2-80
026-95688-H	KKCAN635/637COM2.E-03.0-V	6823-00735	PL3-1/2-80
026-95689-H	KKCAN635/637COM2-00.2-V	6823-00835	PL4400
026-95693-H	KKCAN-CAN/IBTT-CAN-7.3V	6823-00835	PL502600
026-95698-H	KKDER/D6R.X10-E-1.00/G	6823-00900	PL502600
026-95725-0	KKDER/D6R.X10-E-2.00/G	6823-00900	PL50M3
026-95735-H	KKDER/D6R.X10-E-3.00/G	6823-01000	PL50M3
026-95737-P	KKDER/D6R.X10-E-5.00/G	6823-01000	PL50M4
026-95742-0	KKDUE2*SUBD25-01.0	6823-01200	PL50M4
026-95743-P	KKDUE2*SUBD25-03.0	6823-01200	PL6600
026-95751-A	KKEAX200-1.0/G	6823-01250	PL8800
026-95751-H	KKEAX200-1.5/G	6823-01250	PLCF1/L/35BSM
026-95769-H	KKEAX200-2.0/G	6823-01400	PLCF1/S/35BSM
026-95776-H	KKEAX200-6.0/G	6823-01400	PLCF112/L/50BSM
026-95777-G	KK-HF-MX-0AS-630-B-015.0	6823-02400	PLCF112/S/51BSM
026-95801-H	KKI2*631.X40/41-10.0	6823-02400	PLCF114/L/44BSM
026-95806-H	KKI2*631.X40/41-13.0	6823-02500	PLCF114/S/44BSM
026-95821-0	KKI631.X40/41.E-01.0	6823-02500	PLCF12/L/22BSM
026-95824-0	KKI631.X40/41.E-02.0	6823-02530	PLCF12/S/22BSM
026-95825-8	KKI635/637.X40-E-01.0-G	6823-02530	PLCF2/L/63BSM
026-95837-P	KKI635/637.X40-E-05.0-G	6823-02600	PLCF2/S/63BSM
026-95865-H	KKI635/7X40/X40-0.09	6823-02600	PLCF212/L/86BSM
026-95866-H	KKI635/7X40/X40-0.12	6823-02950	PLCF212/S/80BSM
026-95872-0	KKID6R4*X40-0.36	6823-02950	PLCF3/L/90BSM
026-95890-0	KKID6R5*X40-0.48	6823-03185	PLCF3/S/90BSM
026-95894-P	KKID-90-631/637+/F-05.0	6823-03185	PLCF34/L/28BSM
026-95904-0	KKIDG60-4*X40-02.1/B-S	6823-03650	PLCF34/S/28BSM
026-95905-H	KKIDG60-X40-30.0/G	6823-03650	PLCF38/L/18BSM
026-95919-0	KKIX40/XA4-00.1	6825-00500	PLCF38/S/18BSM
026-95921-H	KKM631.X40/20-X41/21-0.30	6825-00500	PLCF4/L/114BSM
026-95932-0	KKMBGM2N0/2.638-05.0/B	6825-00700	PLE-B12
026-95939-H	KKMBGM2N0/2.638-07.0/B	6825-00700	PLE-B12
026-95941-H	KKMBGM2N0/2.638-10.0/B	6825-01200	PLJ-C/1438556
026-95944-H	KKMBGM2NRN0/2.631-02.0-B	6825-01200	PLJ-C/1438556
026-95947-H	KKMBGM2NRN0/2.631-05.0-B	6825-01585	PLJ-C10
026-95955-H	KKMBGM2NRN0/2.631-25.0-B	6825-01585	PLJ-C10
026-95961-H	KKMBGM2NRN0/2.K-05.0/B	6825-04202	PLJ-C10-EX
026-95964-0	KKMBGM2NRN0/2.K-08.0/B	6825-04202	PLJ-C10-EX
026-95970-H	KKMBGM2NRN0/2.K-10.0/B	6826-00500	PLK-A11
026-95973-0	KKMBGM2NRN0/2.K-15.0/B	6826-00500	PLK-A11
026-95977-H	KKMBM2NRN3.K-10.0/B	6826-00700	PLK-A11-EX
026-95978-H	KKMBR4.K-12.0/B	6826-00700	PLK-A11-EX
026-95986-H	KK-M-MX-06S-630-K-B-010.0	6826-01200	PLK-B11
026-95988-H	KK-M-MX-06S-630-K-B-015.0	6826-01200	PLK-B11
026-95989-H	KK-M-MX-06S-638-K-B-005.0	6826-01585	PLK-B12
026-96001-H	KK-M-NX-06S-630-K-B-002.0	6826-01585	PLK-B12

026-96002-H	KK-M-NX-06S-630-K-B-010.0	6826-04202	PLK-B12-EX
026-96003-H	KK-M-NX-06S-630-K-B-025.0	6826-04202	PLK-B12-EX
026-96004-H	KK-M-NX-06S-638-K-B-002.0	6826-11700	PLK-C10
026-96005-H	KK-M-NX-06S-638-K-B-015.0	6826-11700	PLK-C10
026-96007-H	KK-M-NX-08S-630-K-B-035.0	6831FIL	PLL063MMA01
026-96013-A	KKPC/IBTT-X3-02.0-B	6831FIL	PLL080MMA01
026-96013-H	KK-RE-MX-0AS-630-B-005.0S	6832FIL	PLL125MMA01
026-96026-P	KK-RE-NX-0AS-630-B-015.0	6832FIL	PLL-A11
026-96028-H	KK-RE-NX-0AS-630-B-025.0	6843FIL	PLL-A11
026-96029-H	KK-RE-NX-0AS-630-B-030.0	6843FIL	PLL-A11-EX
026-96030-H	KKRP485/TS8000-04.0-V	6844FIL	PLL-A11-EX
026-96031-H	KKRTGMR-02.0/B	6844FIL	PLL-B11
026-96032-H	KKRTGMR-03.0/B	6850-63-00500-0000-000000	PLL-B11
026-96033-H	KKRTGMR-05.0/B	6850-63-00500-0000-000000	PLL-B12
026-96034-H	KKRTGMR-06.0/B	6898B	PLL-B12
026-96035-H	KKRTGMR-08.0/B	6-8C3MXS	PLL-B12-EX
026-96036-H	KKRTGMR-09.0/B	6-8C4OMLOS	PLL-B12-EX
026-96044-H	KKRTGMR-10.0/B	6-8C4OMLOSS	PLL-C10
026-96050-H	KKRTGMR-15.0/B	6-8C4OMXS	PLL-C10
026-96069-H	KKRTGMR-20.0/B	6-8C4OMXSS	PLM-A10
026-96088-H	KKRTGMR-25.0/B	6-8C5OMLOS	PLM-A10
026-96094-0	KKRTGMR-30.0/B	6-8C5OMLOSS	PLM-A12
026-96095-H	KL0104	6-8C5OMXSS	PLM-A12
026-96110-H	KL0104	6-8CMTXS	PLN-B12
026-96135-H	KL-03	6-8CMTXSS	PLN-B12
026-96160-0	KL-03C	6-8F3MK4S	PLN-B12-EX
026-96164-0	KL-05	6-8F3MK4SS	PLN-B12-EX
026-96177-0	KL-08	6-8F3MXS	PLN-C10
026-96179-H	KL1012	6-8F3MXSS	PLN-C10
026-96186-H	KL1012	6-8F42EDMLOS	PLN-C10EP/3002489
026-96189-H	KL1015	6-8F42EDMLOS1SF230CF	PLN-C10EP/3002489
026-96197-V	KL1015	6-8F42EDMLOSEPDM	PLN-C10-EX
026-96212-H	KL1016	6-8F42EDMLOSS	PLN-C10-EX
026-96238-H	KL1016	6-8F42EDMXS	PLN-C12
026-96240-H	KL1017	6-8F42EDMXSS	PLN-C12
026-96243-H	KL1017	6-8F42EDMXSSV	PLN-D10
026-96244-H	KL1026	6-8F4OMXS	PLN-D10
026-96246-H	KL1026	6-8F4OMXSS	PLN-D12
026-96247-G	KL-12	6-8F5OMLOS	PLN-D12
026-96259-0	KL15-18	6-8F5OMXS	PLUG-G1/4M
026-96262-H	KL2001	6-8F5OMXSS	PLUG-G1/4M
026-96263-H	KL2001	6-8F642EDMLS	PLUG-G1/8M
026-96267-P	KL2002	6-8F642EDMXS	PLUG-G1/8M
026-96280-P	KL2002	6-8F6MK4S	PLUG-M5M
026-96282-0	KL2003	6-8FMK4S	PLUG-M5M
026-96284-H	KL2003	6-8FMK4SS	PM10-36
026-96285-0	KL2004	6-8FMTXB	PMB2MLSK323A2
026-96292-H	KL2004	6-8FMTXS	PMB2MLSK323A2
026-96296-H	KL2005	6-8FMTXSS	PMDXX1
026-96351-0	KL2005	6-8G4MLOSSMOV	PMDXX1
026-96360-0	KL2008	6-8G4MXS	PMDXX2
026-96361-0	KL2008	6-8G4MXSMO	PMDXX2
026-96361-5	KL2015	6-8G4MXSSMO	PMS2308-02-D24CK

026-96364-0	KL2015	6-8GC GBZ-SS	PMS2308-02-D24CK
026-96365-0	KL2016	6-8GMTXSS	PMX-B02
026-96366-0	KL2016	6-8K FBZ-SS	PMX-B02
026-96373-P	KL2017	6-8K GBZ-SS	PMXSYMB
026-96408-H	KL2017	6-8K T2HF-SS	PMXSYMB
026-96411-H	KL2020	68KAAW17SPN	PMX-V05
026-96418-H	KL2020	68KAAW21SPN	PMX-V05
026-96431-H	KL2021	68KAAW26SPN	PN025HM001
026-96437-0	KL2021	68KAIW17SPN	PN025HM005
026-96437-5	KL3035	68KAIW21SPN	PN032HM001
026-96442-H	KL3035	68KAIW26SPN	PN032HM005
026-96446-0	KL3036	68KATF10SPN	PN040HM001
026-96455-H	KL3036	68KATF13SPN	PN040HM002
026-96463-H	KL3043	68KATF19SPN	PN040HM005
026-96480-5	KL3043	6-8LEMQ1SS	PN040MMB02
026-96484-H	KL3043	6-8LEMQ2SS	PN050HM001
026-96485-P	KL3043	6-8R FBZ-SS	PN050HM002
026-96495-0	KL3045FIL	6-8V4OMLOS	PN050HM005
026-96500-A	KL3045FIL	6-8V4OMXS	PN050MMB02
026-96503-H	KL3046	690+0175/460/CNN/UK	PN063HM001
026-96504-0	KL3046	6901-00-G	PN063HM002
026-96506-0	KL3047	6901-10	PN063HM005
026-96510-P	KL3047	690-211400B0-B00P00-A400	PN063MMB02
026-96512-H	KL3047	690-211400B0-B00P00-A430	PN063MMB05
026-96513-0	KL3047	690-211400B0-B00P00-D000	PN080HM001
026-96518-H	KL3048	690-211400B0-B00W00-B000	PN080HM002
026-96522-H	KL3048	690-211400B0-B00W00-B400	PN080HM005
026-96528-P	KL3048	690-211400B0-B0SP00-A400	PN080MMB02
026-96530-0	KL3048	690-211400B0-B0SP00-A430	PN100HM001
026-96544-H	KL3049	690-211400B0-B0SP00-F000	PN100HM002
026-96549-H	KL3049	690-211400B0-B0SW00-B400	PN100HM005
026-96581-H	KL3050	690-211400B0-BF0P00-A000	PN100MMB02
026-96582-H	KL3050	690-211400B0-BF0P00-A00R	PN125HM001
026-96614-H	KL3052	690-211400B0-BF0P00-A030	PN125HM002
026-96628-0	KL3052	690-211400B0-BF0P00-A03P	PN125HM005
026-96633-0	KL3054FIL	690-211400B0-BF0P00-A400	PN125MMB02
026-96641-0	KL3054FIL	690-211400B0-BF0P00-A430	PN140MMA01
026-96658-0	KL3055	690-211400B0-BF0P00-D000	PN160HM001
026-96664-0	KL3055	690-211400B0-BF0W00-A03E	PN160HM002
026-96669-H	KL3055	690-211400B0-BFSP00-A000	PN160HM005
026-96672-0	KL3055	690-211400B0-BFSP00-A400	PN160MMB01
026-96673-0	KL3056	690-211400B0-BFSP00-D000	PN160MMB02
026-96678-H	KL3056	690-211400B0-BFSW00-A00R	PN180MMA01
026-96684-H	KL3056	690-211700B0-B00P00-A000	PN200BV
026-96689-H	KL3056	690-211700B0-B00P00-A400	PN200HM001
026-96690-0	KL3059	690-211700B0-B00W00-B400	PN200HM002
026-96693-0	KL3059	690-211700B0-B0SP00-D000	PN200HM005
026-96700-P	KL3060FIL	690-211700B0-BF0P00-A000	PN200MMB02
026-96702-0	KL3060FIL	690-211700B0-BF0P00-A00E	PN3-004-07M080/100/14/30
026-96703-0	KL3060FIL	690-211700B0-BF0P00-A400	PN4-005-07M080/100/14/30
026-96708-H	KL3060FIL	690-211700B0-BF0P00-A430	PN4-005-10M080/100/14/30
026-96719-H	KL3087	690-211700B0-BF0P00-D000	PN4-008-07M080/100/19/40
026-96721-H	KL3087	690-211700B0-BF0P00-D430	PN4-008-10M080/100/14/30

026-96729-U	KL3096	690-211700B0-BFSP00-B400	PN4-008-10M080/100/19/40
026-96735-0	KL3096	690-212105B0-B00P00-A000	PN4-010-07M080/100/19/40
026-96736-0	KL3098	690-212105B0-B00P00-A03P	PN4-010-10M080/100/14/30
026-96738-0	KL3098	690-212105B0-B00P00-A03R	PN4-040-10M080/100/14/30
026-96745-0	KL3109	690-212105B0-B00P00-A400	PN4-064-10M080/100/14/30
026-96747-H	KL3109	690-212105B0-B00P00-A430	PN4-100-10M080/100/14/30
026-96761-H	KL3157	690-212105B0-B00W00-A400	PN5-003-07M095/130/19/40
026-96762-0	KL3157	690-212105B0-B00W00-B400	PN5-003-10M095/115/19/40
026-96763-H	KL3166	690-212105B0-BF0P00-A000	PN5-004-10M095/115/19/40
026-96769-P	KL3166	690-212105B0-BF0P00-A400	PN5-008-10M050/095/14/30
026-96781-0	KL3168	690-212105B0-BFSP00-A000	PN5-008-10M095/115/19/40
026-96781-5	KL3168	690-231400B0-B00W00-B000	PN5-010-00M095/115/19/40
026-96785-0	KL3172	690-231400B0-B00W00-B400	PN5-010-07M095/115/19/40
026-96788-G	KL3172	690-231400B0-B0SW00-B400	PN5-010-10M050/100/14/30
026-96790-P	KL3174	690-231400B0-BF0P00-A03L	PN5-010-10M095/115/19/40
026-96796-0	KL3174	690-231400B0-BF0P00-F000	PN5-012-10M050/100/14/30
026-96800-H	KL3176	690-231400B0-BFSP00-A000	PN5-012-10M095/130/24/50
026-96801-A	KL3176	690-231700B0-B00P00-A000	PN5-015-10M095/115/19/40
026-96816-H	KL3179	690-231700B0-B00P00-F000	PN5-032-08M095/130/19/40
026-96829-5	KL3179	690-231700B0-B00W00-B400	PN5-040-10M095/115/19/40
026-96835-H	KL3181	690-231700B0-BF0P00-A000	PN620S
026-96836-H	KL3181	690-231700B0-BF0P00-D000	PN8-040-07M180/215/38/80
026-96848-0	KL3183	690-231700B0-BF0P00-F000	PNBRAB8
026-96848-5	KL3183	690-232105B0-B00P00-A000	PNBZ 10-SS
026-96850-0	KL3186	690-232105B0-B00P00-A400	PNBZ 12-SS
026-96857-HL	KL3186	690-232105B0-B00P00-E400	PNBZ 16-SS
026-96866-P	KL3199	690-232105B0-B00W00-B400	PNBZ 20-SS
026-96867-0	KL3199	690-232105B0-B00W00-B430	PNBZ 25-SS
026-96890-H	KL3200	690-232105B0-BF0W00-B400	PNBZ 6-SS
026-96914-H	KL3200	690-232165B0-B00P00-A400	PNBZ 8-SS
026-96915-H	KL3201	690-232165B0-B00P00-B430	PND-05A-03
026-96953-F	KL3201	690-232165B0-B00P00-G000	PND-05A-06
026-96960-H	KL3202	690-232165B0-B00W00-B000	PND-05A-12
026-96966-0	KL3202	690-232165B0-B00W00-B400	PND-05D-03
026-96981-0	KL3203	690-232165B0-BF0P00-A000	PND-05D-06
026-96985-0	KL3203	690-232165B0-BF0P00-A400	PND-05D-12
026-96990-0	KL3204	690-232165B0-BF0P00-D000	PNG-103-NR
026-98613-H	KL3204	690-232220C0-B00P00-A000	PNG-103-NR
026-98615-5	KL3206	690-232220C0-B00P00-A400	PNG-108-NR
026-99009-G	KL3206	690-232220C0-B00P00-D000	PNG-108-NR
026-99011-H	KL3207	690-232220C0-B00W00-B400	PNG-116-SI
026-99013-H	KL3207	690-232280C0-B00P00-A000	PNG-116-SI
026-99014-H	KL3210	690-232280C0-B00P00-A400	PNG-117-NBR
026-99019-H	KL3210	690-232280C0-B00P00-B400	PNG-117-NBR
026-99024-T	KL3210	690-232280C0-B00W00-B400	PNG-121-NBR
026-99025-P	KL3210	690-232280C0-B0SW00-B400	PNG-121-NBR
026-99027-H	KL3211	690-232420D0-000P00-A000	PNG-122-NBR
026-99029-H	KL3211	690-232420D0-B00P00-A000	PNG-122-NBR
026-99030-0	KL3214	690-232420D0-B00P00-A400	PNG-123-NR
026-99040-0	KL3214	690-232540D0-B00P00-A400	PNG-123-NR
026-99059-H	KL3215	690-232680D0-B00W00-B400	PNG-125-U
026-99061-H	KL3215	690-232800E0-B00P00-A400	PNG-125-U
026-99075-H	KL3216	690-233104F1-000P00-A000	PNG-130A-NBR

026-99084-H	KL3216	690-233104F2-B00P00-A400	PNG-130A-NBR
026-99103-H	KL3217	690-233130F2-B00P00-A400	PNG-130A-SI
026-99107-T	KL3217	690-233154F2-B00P00-A400	PNG-130A-SI
026-99112-H	KL3240	690-431250B0-B00P00-A000	PNG-130B-NBR
026-99113-H	KL3240	690-431250B0-B00P00-A03P	PNG-130B-NBR
026-99114-H	KL3241	690-431250B0-B00P00-A03R	PNG-130B-U
026-99121-H	KL3241	690-431250B0-B00P00-A400	PNG-130B-U
026-99122-P	KL3241	690-431250B0-B00P00-B400	PNMB10
026-99124-H	KL3241	690-431250B0-B00P00-D000	PNMB12
026-99125-0	KL3250	690-431250B0-B00P00-E000	PNMB6
026-99132-H	KL3250	690-431250B0-B00P00-E00P	PNMB8
026-99134-H	KL3250	690-431250B0-B00P00-E030	POP DESIGNER CD
026-99138-0	KL3250	690-431250B0-B00P00-F000	POP12
026-99142-P	KL3251	690-431250B0-B00W00-B400	POP22
026-99147-0	KL3251	690-431250B0-B0SP00-A000	POP23
026-99166-K	KL3253	690-431250B0-B0SP00-F000	POP31
026-99168-0	KL3253	690-431250B0-B0SP00-F400	PORTBOARD A
026-99169-K	KL3253	690-431250B0-B0SW00-B400	PORTBOARD B
026-99171-H	KL3253	690-431250B0-BF0P00-A000	PP01045
026-99177-0	KL3254	690-431250B0-BF0P00-A00P	PP01045
026-99181-P	KL3254	690-431250B0-BF0P00-A030	PP01069
026-99182-P	KL3255	690-431250B0-BF0P00-A03D	PP01069
026-99183-H	KL3255	690-431250B0-BF0P00-A03E	PP02DP
026-99191-H	KL3256	690-431250B0-BF0P00-A03L	PP02DP2.5N776S
026-99194-H	KL3256	690-431250B0-BF0P00-A03P	PP02SP
026-99251-0	KL3257	690-431250B0-BF0P00-A03R	PP02SP2.1N771S
026-99262-G	KL3257	690-431250B0-BF0P00-A400	PP04DP
026-99271-0	KL3258	690-431250B0-BF0P00-A430	PP04DP2.1N766S
026-99273-0	KL3258	690-431250B0-BF0P00-D000	PP04SP
026-99282-H	KL3260	690-431250B0-BF0P00-E000	PP04SP2.1N761S
026-99290-H	KL3260	690-431250B0-BF0P00-E030	PP06SP
026-99295-0	KL3300	690-431250B0-BF0P00-F000	PP11060
026-99300-0	KL3300	690-431250B0-BFSP00-A000	PP120
026-99308-0	KL3300	690-431250B0-BFSP00-A00P	PP12025
026-99309-H	KL3300	690-431250B0-BFSP00-A400	PP12060
026-99314-H	KL3301	690-431250B0-BFSP00-A430	PP-21-1000
026-99315-P	KL3301	690-431250B0-BFSP00-D000	PP40
026-99317-H	KL3301	690-431250B0-BFSP00-D03N	PP4BU4
026-99322-T	KL3301	690-431250B0-BFSP00-D400	PP4FC4
026-99326-G	KL3302	690-431250B0-BFSP00-F000	PP4MC4
026-99329-H	KL3302	690-431250B0-BFSW00-B400	PP4ME2
026-99332-0	KL3302	690-431450B0-B00P00-A000	PP4ME4
026-99334-P	KL3302	690-431450B0-B00P00-A400	PP4MTS2
026-99335-0	KL3303	690-431450B0-B00P00-A430	PP4TEU4
026-99336-H	KL3303	690-431450B0-B00P00-D000	PP4TPL
026-99337-G	KL3303	690-431450B0-B00P00-F000	PP4TU4
026-99338-0	KL3303	690-431450B0-B00W00-A400	PP60
026-99340-H	KL3305	690-431450B0-B00W00-B400	PP6EU4
026-99341-5	KL3305	690-431450B0-B0SP00-A000	PP6EU6
026-99342-H	KL3306	690-431450B0-B0SP00-A00P	PP6ME4
026-99344-G	KL3306	690-431450B0-B0SP00-A00R	PP80
026-99345-0	KL3308	690-431450B0-B0SP00-F000	PP-86-0250
026-99346-H	KL3308	690-431450B0-B0SW00-A400	PPA-95-108

026-99347-0	KL3308	690-431450B0-B0SW00-B400	PPA-95-108
026-99351-H	KL3308	690-431450B0-BF0P00-A000	PP-BU.-GR.1-5P-LK/MS
026-99353-H	KL3309	690-431450B0-BF0P00-A00E	PPCF1/L/38S
026-99354-H	KL3309	690-431450B0-BF0P00-A00L	PPCF1/S/38S
026-99357-H	KL3310	690-431450B0-BF0P00-A00P	PPCF112/L/50S
026-99358-0	KL3310	690-431450B0-BF0P00-A030	PPCF112/S/51S
026-99359-0	KL3310	690-431450B0-BF0P00-A03L	PPCF114/L/43S
026-99361-T	KL3310	690-431450B0-BF0P00-A03P	PPCF114/S/44S
026-99363-G	KL3312	690-431450B0-BF0P00-A03R	PPCF12/L/24S
026-99364-H	KL3312	690-431450B0-BF0P00-A400	PPCF12/S/24S
026-99365-G	KL3313	690-431450B0-BF0P00-A430	PPCF2/L/62S
026-99368-G	KL3313	690-431450B0-BF0P00-B400	PPCF2/S/67S
026-99369-T	KL3314	690-431450B0-BF0P00-D000	PPCF212/L/76S
026-99371-G	KL3314	690-431450B0-BF0P00-D400	PPCF212/S/80S
026-99372-G	KL3315	690-431450B0-BF0P00-E000	PPCF3/L/90S
026-99375-G	KL3315	690-431450B0-BF0P00-E030	PPCF3/S/90S
026-99375-H	KL3316	690-431450B0-BF0P00-E03P	PPCF312/L/102S
026-99376-H	KL3316	690-431450B0-BF0P00-E430	PPCF312/S/102S
026-99382-H	KL3332	690-431450B0-BF0P00-F000	PPCF34/L/31.5S
026-99383-H	KL3332	690-431450B0-BF0W00-B400	PPCF34/S/32S
026-99387-H	KL3332	690-431450B0-BFSP00-A000	PPCF38/L/18S
026-99388-H	KL3332	690-431450B0-BFSP00-A00D	PPCF38/S/18S
026-99389-H	KL3333	690-431450B0-BFSP00-A400	PPCF4/L/114S
026-99390-K	KL3333	690-431450B0-BFSP00-D000	PPCF4/S/114S
026-99392-0	KL3349	690-431450B0-BFSP00-D00R	PPCF5/L/141S
026-99393-0	KL3349	690-431450B0-BFSP00-D03N	PPL-251-4HB
026-99394-0	KL3349	690-431450B0-BFSW00-B400	PPL-251-5HB
026-99395-H	KL3349	690-431550B0-B00P00-A000	PPL-251-6HB
026-99396-0	KL3350	690-431550B0-B00P00-A03L	PPL-251-6MBT
026-99400-H	KL3350	690-431550B0-B00P00-A400	PPL-251-H6HB
026-99402-0	KL3355	690-431550B0-B00P00-A430	PPL-252-4HB
026-99409-S	KL3355	690-431550B0-B00P00-B400	PPL-252-6HB
026-99411-0	KL3355	690-431550B0-B00P00-B430	PPL-252-C4HB
026-99414-0	KL3355	690-431550B0-B00P00-D000	PPL-253-4MBT
026-99416-H	KL3356	690-431550B0-B00P00-E400	PPL-253-5HB
026-99417-0	KL3356	690-431550B0-B00P00-F000	PPL-253-6MBT
026-99418-H	KL3356	690-431550B0-B00P00-F430	PPL-254-4HB
026-99420-H	KL3356	690-431550B0-B00W00-B400	PPL-254-4MBT
026-99423-0	KL3357	690-431550B0-B0SP00-A400	PPL-254-5HB
026-99429-P	KL3357	690-431550B0-B0SP00-F000	PPL-254-6HB
026-99431-T	KL3359	690-431550B0-B0SW00-B400	PPL-254-H6HB
026-99433-H	KL3359	690-431550B0-BF0P00-A000	PPM10001
026-99434-H	KL3359	690-431550B0-BF0P00-A00R	PPM10001N
026-99435-H	KL3359	690-431550B0-BF0P00-A030	PPM10002
026-99438-0	KL3378	690-431550B0-BF0P00-A03L	PPM10002N
026-99440-0	KL3378	690-431550B0-BF0P00-A03P	PPM10008
026-99440-G	KL3384	690-431550B0-BF0P00-A400	PPM10017
026-99441-0	KL3384	690-431550B0-BF0P00-A430	PPM10019
026-99443-P	KL3388	690-431550B0-BF0P00-D000	PPM10032
026-99445-G	KL3388	690-431550B0-BF0P00-E000	PPM10063
026-99445-H	KL3395	690-431550B0-BF0P00-E400	PPM10068
026-99446-P	KL3395	690-431550B0-BF0P00-E430	PPM10069
026-99447-0	KL3399	690-431550B0-BF0P00-F000	PPM-121-2MP

026-99450-H	KL3399	690-431550B0-BF0P00-F400	PPM-121-3HB
026-99453-5	KL3435	690-431550B0-BF0P00-F430	PPM-121-H2HB
026-99455-0	KL3435	690-431550B0-BF0W00-B400	PPM-121-H3HB
026-99456-0	KL3435	690-431550B0-BFSP00-A000	PPM-121-H4HB
026-99458-P	KL3435	690-431550B0-BFSP00-A00P	PPM-122-1HB
026-99459-P	KL3436	690-431550B0-BFSP00-A400	PPM-122-2MBT
026-99460-H	KL3436	690-431550B0-BFSP00-B00P	PPM-122-C2HB
026-99463-0	KL3436	690-431550B0-BFSP00-D000	PPM-123-2MBT
026-99464-H	KL3436	690-431550B0-BFSP00-E00P	PPM-123-4HB
026-99465-G	KL3437	690-431950B0-B00P00-A000	PPM-123-4MBT
026-99469-H	KL3437	690-431950B0-B00P00-A030	PPM-124-2MBT
026-99470-G	KL3438	690-431950B0-B00P00-A03P	PPM-124-4HB
026-99471-H	KL3438	690-431950B0-B00P00-A03R	PPM-124-4MBT
026-99474-H	KL3438	690-431950B0-B00P00-A400	PPM-124-C2HB
026-99477-H	KL3438	690-431950B0-B00P00-A430	PPM-124-C4HB
026-99479-0	KL3439	690-431950B0-B00P00-B000	PPMV10007N
026-99480-0	KL3439	690-431950B0-B00P00-D000	PPR-L01
026-99487-0	KL3440	690-431950B0-B00P00-D400	PPR-L01
026-99492-H	KL3440	690-431950B0-B00P00-E030	PPR-L02
026-99497-0	KL3442	690-431950B0-B00P00-E03P	PPR-L02
026-99498-0	KL3442	690-431950B0-B00P00-E400	PPR-L04
026-99499-G	KL3443	690-431950B0-B00P00-F000	PPR-L04
026-99501-H	KL3443	690-431950B0-B00P00-F430	PPR-L07
026-99503-P	KL3444	690-431950B0-B00P00-G000	PPR-L07
026-99504-P	KL3444	690-431950B0-B00P07-A000	PPR-L08
026-99505-H	KL3444	690-431950B0-B00P07-A03L	PPR-L08
026-99508-0	KL3444	690-431950B0-B00P07-A400	PPR-L09
026-99512-H	KL3445	690-431950B0-B00PT0-B430	PPR-L09
026-99513-H	KL3445	690-431950B0-B00W00-A400	PPR-L11
026-99515-H	KL3446	690-431950B0-B00W00-B000	PPR-L11
026-99520-0	KL3446	690-431950B0-B00W00-B400	PPR-L12
026-99521-H	KL3447	690-431950B0-B0SP00-A000	PPR-L12
026-99522-H	KL3447	690-431950B0-B0SP00-A400	PPR-L13
026-99523-H	KL3448	690-431950B0-B0SP00-A430	PPR-L13
026-99524-H	KL3448	690-431950B0-B0SP00-F000	PPR-L14
026-99525-P	KL3450	690-431950B0-B0SP00-F430	PPR-L14
026-99528-P	KL3450	690-431950B0-B0SW00-B400	PPR-L15
026-99531-0	KL3450	690-431950B0-BF0P00-A000	PPR-L15
026-99535-H	KL3450	690-431950B0-BF0P00-A00D	PPR-L35
026-99536-H	KL3451	690-431950B0-BF0P00-A00P	PPR-L35
026-99539-H	KL3451	690-431950B0-BF0P00-A030	PPR-V02
026-99540-H	KL3452	690-431950B0-BF0P00-A03L	PPR-V02
026-99543-P	KL3452	690-431950B0-BF0P00-A03P	PPR-V04
026-99549-H	KL3453	690-431950B0-BF0P00-A03R	PPR-V04
026-99551-D	KL3453	690-431950B0-BF0P00-A400	PPR-V06
026-99552-D	KL3453	690-431950B0-BF0P00-A430	PPR-V06
026-99553-H	KL3453	690-431950B0-BF0P00-D000	PPR-V07
026-99556-G	KL3454	690-431950B0-BF0P00-D030	PPR-V07
026-99558-H	KL3454	690-431950B0-BF0P00-D430	PPR-V08
026-99559-H	KL3455	690-431950B0-BF0P00-E000	PPR-V08
026-99560-G	KL3455	690-431950B0-BF0P00-E00D	PPR-V20
026-99561-P	KL3472	690-431950B0-BF0P00-E00P	PPR-V20
026-99563-H	KL3472	690-431950B0-BF0P00-E030	PPR-V21

026-99569-U	KL3486	690-431950B0-BF0P00-E400	PPR-V21
026-99574-0	KL3486	690-431950B0-BF0P00-E430	PPR-V22
026-99576-H	KL4003	690-431950B0-BF0P00-F000	PPR-V22
026-99579-H	KL4003	690-431950B0-BF0P00-I00P	PPR-V23
026-99580-0	KL4006	690-431950B0-BF0P61-A430	PPR-V23
026-99581-H	KL4006	690-431950B0-BF0P62-A430	PPR-V24
026-99587-H	KL4030	690-431950B0-BF0PK0-D000	PPR-V24
026-99588-H	KL4030	690-431950B0-BF0W00-A400	PPR-V27
026-99592-H	KL4062	690-431950B0-BF0W00-B400	PPR-V27
026-99593-P	KL4062	690-431950B0-BFSP00-A000	PPR-V28
026-99597-H	KL4063	690-431950B0-BFSP00-A00D	PPR-V28
026-99600-P	KL4063	690-431950B0-BFSP00-A00P	PPR-V29
026-99601-H	KL4064	690-431950B0-BFSP00-A00R	PPR-V29
026-99603-H	KL4064	690-431950B0-BFSP00-A400	PPR-V63
026-99604-H	KL4065	690-431950B0-BFSP00-A430	PPR-V63
026-99607-P	KL4065	690-431950B0-BFSP00-D000	PPR-W01
026-99608-0	KL4066	690-431950B0-BFSP00-D03N	PPR-W01
026-99615-G	KL4066	690-431950B0-BFSP00-E400	PPR-X01
026-99616-G	KL4067	690-431950B0-BFSW00-B400	PPR-X01
026-99617-H	KL4067	690-432120B0-B00P00-A000	PPS1-1C3-RHM
026-99620-H	KL4068	690-432120B0-B00P00-A03P	PPS1-1C3-RHM
026-99627-0	KL4068	690-432120B0-B00P00-A400	PPT-10M
026-99629-H	KL4069	690-432120B0-B00P00-A430	PPT-12M
026-99630-H	KL4069	690-432120B0-B00P00-B400	PPT-18M
026-99631-P	KL4070	690-432120B0-B00P00-B430	PPT-2T
026-99633-B	KL4070	690-432120B0-B00P00-D000	PPT-3M
026-99639-HL	KL4072	690-432120B0-B00P00-E030	PPT-4T
026-99640-HL	KL4072	690-432120B0-B00P00-E400	PPT-6M
026-99644-P	KL4074	690-432120B0-B00P00-F000	PPT-6T
026-99645-0	KL4074	690-432120B0-B00P00-F430	PPT-8M
026-99646-P	KL4077	690-432120B0-B00PT0-B430	PPU21360
026-99650-H	KL4077	690-432120B0-B00W00-A03P	PPU21361
026-99653-T	KL4078	690-432120B0-B00W00-B400	PPU21362
026-99654-P	KL4078	690-432120B0-B00W07-B400	PPU21363
026-99655-0	KL4080	690-432120B0-B0SP00-A000	PPU21364
026-99656-0	KL4080	690-432120B0-B0SP00-A400	PPU21365
026-99657-0	KL4081	690-432120B0-B0SP00-F000	PPU21369
026-99658-H	KL4081	690-432120B0-B0SP00-F430	PPU21389
026-99659-G	KL4082	690-432120B0-B0SW00-B400	PPU21390
026-99660-G	KL4082	690-432120B0-BF0P00-A000	PPU21391
026-99661-H	KL4083	690-432120B0-BF0P00-A00P	PPU21392
026-99664-G	KL4083	690-432120B0-BF0P00-A00R	PPU21393
026-99670-U	KL4084	690-432120B0-BF0P00-A03R	PQ050HM001
026-99672-P	KL4084	690-432120B0-BF0P00-A400	PR10-04CSS
026-99673-7	KL4085	690-432120B0-BF0P00-A430	PR10-04CSS
026-99678-H	KL4085	690-432120B0-BF0P00-B400	PR10-04DSS
026-99681-H	KL4086	690-432120B0-BF0P00-D000	PR10-04DSS
026-99684-H	KL4086	690-432120B0-BF0P00-D400	PR103L001
026-99686-0	KL4087	690-432120B0-BF0P00-D430	PR103L005
026-99688-B	KL4087	690-432120B0-BF0P00-E000	PR103S21
026-99688-S	KL4088	690-432120B0-BF0P00-E00R	PR10G04BSS
026-99690-H	KL4088	690-432120B0-BF0P00-E03D	PR10G04BSS
026-99692-H	KL4088	690-432120B0-BF0P00-E03P	PR10G04CKSS

026-99693-H	KL4088	690-432120B0-BF0P00-E400	PR10G04CKSS
026-99695-H	KL4137	690-432120B0-BF0P00-E430	PR10G04CSS
026-99697-H	KL4137	690-432120B0-BF0P00-F000	PR10G04CSS
026-99705-0	KL4147	690-432120B0-BF0W00-B400	PR10M10L1PN9
026-99705-5	KL4147	690-432120B0-BFSP00-A000	PR10M10S1PN9
026-99706-0	KL4167	690-432120B0-BFSP00-A00D	PR10M17S1PN9
026-99713-H	KL4167	690-432120B0-BFSP00-A00R	PR10M25S1PN9
026-99714-P	KL4175	690-432120B0-BFSP00-E400	PR10M35L1PN9
026-99715-0	KL4175	690-432120B0-BFSP00-F000	PR10M35S1PN9
026-99716-H	KL4181	690-432120C0-B00P00-A000	PR10PF
026-99717-H	KL4181	690-432120C0-B00P00-A400	PR10PH
026-99718-H	KL4189	690-432120C0-B00P00-A40P	PR152H001
026-99720-H	KL4189	690-432120C0-B00P00-A430	PR152H005
026-99725-H	KL4208	690-432120C0-B00P00-A43P	PR153L001
026-99726-H	KL4208	690-432120C0-B00P00-B000	PR153L005
026-99728-0	KL4209	690-432120C0-B00P00-B400	PR202H001
026-99734-H	KL4209	690-432120C0-B00P00-D000	PR202H005
026-99735-H	KL5091	690-432120C0-B00P00-D03N	PR203L001
026-99741-P	KL5091	690-432120C0-B00P00-D43N	PR203L005
026-99743-P	KL5097	690-432120C0-B00P00-E400	PR-25
026-99746-0	KL5097	690-432120C0-B00P00-E43P	PR252H001
026-99748-H	KL5108	690-432120C0-B00P00-F000	PR252H005
026-99754-0	KL5108	690-432120C0-B0SP00-A000	PR253L001
026-99757-H	KL5109	690-432120C0-B0SP00-A400	PR253L005
026-99759-H	KL5109	690-432120C0-B0SP00-D000	PR25M10S1PN9
026-99767-0	KL5110	690-432140B0-B00W00-B400	PR25M10S1PV9
026-99769-H	KL5110	690-432140B0-B0SW00-B400	PR25M17S1PN9
026-99771-H	KL5111	690-432140B0-BF0P00-A000	PR25M25A1PN9
026-99773-H	KL5111	690-432140B0-BF0P00-A400	PR25M25S1PN9
026-99774-H	KL5112	690-432140B0-BF0PK0-D000	PR25M35A1PN9
026-99775-H	KL5112	690-432140B0-BFSW00-B400	PR25M35L1PN9
026-99780-H	KL5123	690-432160C0-B00P00-A000	PR25M35S1PN9
026-99785-G	KL5123	690-432160C0-B00P00-A00P	PR2759Q
026-99790-0	KL5124	690-432160C0-B00P00-A030	PR2760Q
026-99795-H	KL5124	690-432160C0-B00P00-A03P	PR2798Q
026-99800-H	KL5130	690-432160C0-B00P00-A400	PR2828
026-99802-H	KL5130	690-432160C0-B00P00-A40P	PR2829Q
026-99803-H	KL5134	690-432160C0-B00P00-A40R	PR2830
026-99804-0	KL5134	690-432160C0-B00P00-A430	PR2830Q
026-99805-0	KL5137	690-432160C0-B00P00-A43L	PR2831Q
026-99807-0	KL5137	690-432160C0-B00P00-A43P	PR2832Q
026-99808-0	KL5204	690-432160C0-B00P00-B000	PR2833
026-99809-H	KL5204	690-432160C0-B00P00-B400	PR2834Q
026-99810-0	KL5227	690-432160C0-B00P00-D000	PR2835Q
026-99811-H	KL5227	690-432160C0-B00P00-D03N	PR2836
026-99812-H	KL5260	690-432160C0-B00P00-D430	PR2840Q
026-99814-0	KL5260	690-432160C0-B00P00-E000	PR2841Q
026-99815-0	KL5350	690-432160C0-B00P00-E030	PR2842Q
026-99816-0	KL5350	690-432160C0-B00P00-E03P	PR2844
026-99824-H	KL5355	690-432160C0-B00P00-E400	PR2846
026-99832-H	KL5355	690-432160C0-B00P00-E430	PR2847Q
026-99835-G	KL5356	690-432160C0-B00P00-E43P	PR2848Q
026-99836-G	KL5356	690-432160C0-B00P00-F000	PR2849Q

026-99837-P	KL5490	690-432160C0-B00P00-F430	PR2850Q
026-99838-0	KL5490	690-432160C0-B00P00-I00P	PR2851Q
026-99842-H	KL5510	690-432160C0-B00PK0-D000	PR2852
026-99844-0	KL5510	690-432160C0-B00W00-A400	PR2853
026-99847-H	KL5511	690-432160C0-B00W00-B400	PR2854
026-99849-H	KL5511	690-432160C0-B0SP00-A000	PR2855Q
026-99852-H	KL5512	690-432160C0-B0SP00-A400	PR2856Q
026-99853-H	KL5512	690-432160C0-B0SP00-A40R	PR2857Q
026-99856-H	KL5513	690-432160C0-B0SP00-A430	PR2858Q
026-99858-H	KL5513	690-432160C0-B0SP00-D000	PR2859Q
026-99859-H	KL5514	690-432160C0-B0SP00-F000	PR2860
026-99862-H	KL5514	690-432160C0-B0SP07-A40R	PR2861
026-99868-A	KL5515	690-432230C0-B00P00-A000	PR2863Q
026-99877-H	KL5515	690-432230C0-B00P00-A00P	PR2864Q
026-99880-G	KL5515	690-432230C0-B00P00-A030	PR2865Q
026-99882-0	KL5515	690-432230C0-B00P00-A03P	PR2866Q
026-99883-H	KL5516	690-432230C0-B00P00-A400	PR2867Q
026-99886-0	KL5516	690-432230C0-B00P00-A40L	PR2868
026-99887-0	KL5517	690-432230C0-B00P00-A40P	PR2869
026-99894-0	KL5517	690-432230C0-B00P00-A40R	PR2870
026-99895-P	KL5523	690-432230C0-B00P00-A430	PR2871Q
026-99901-P	KL5523	690-432230C0-B00P00-A43L	PR2872Q
026-99902-H	KL5530	690-432230C0-B00P00-A43P	PR2873Q
026-99903-H	KL5530	690-432230C0-B00P00-B000	PR2874Q
026-99904-0	KL5531	690-432230C0-B00P00-B400	PR2875Q
026-99905-P	KL5531	690-432230C0-B00P00-D000	PR3031Q
026-99910-0	KL5532	690-432230C0-B00P00-D400	PR3032Q
026-99913-0	KL5532	690-432230C0-B00P00-E000	PR3033Q
026-99915-0	KL5559	690-432230C0-B00P00-E400	PR3034Q
026-99918-0	KL5559	690-432230C0-B00P00-E430	PR3035Q
026-99919-G	KL5565	690-432230C0-B00P00-F000	PR3036Q
026-99924-P	KL5565	690-432230C0-B00P00-F400	PR3037Q
026-99928-0	KL5601	690-432230C0-B00P00-G000	PR3038Q
026-99929-5	KL5601	690-432230C0-B00PK0-D000	PR3056Q
026-99936-0	KL5602	690-432230C0-B00PT0-B400	PR3057Q
026-99937-H	KL5602	690-432230C0-B00W00-A400	PR3058Q
026-99939-H	KL6007	690-432230C0-B00W00-B400	PR3059Q
026-99943-0	KL6007	690-432230C0-B0SP00-A000	PR3064Q
026-99946-H	KL6020	690-432230C0-B0SP00-A00P	PR3065Q
026-99947-0	KL6020	690-432230C0-B0SP00-A400	PR3066Q
026-99948-0	KL6022	690-432230C0-B0SP00-A40P	PR3067Q
026-99949-0	KL6022	690-432230C0-B0SP00-B400	PR3085Q
026-99952-0	KL7019	690-432230C0-B0SP00-B40P	PR3086Q
026-99956-H	KL7019	690-432230C0-B0SP00-D000	PR3087Q
026-99959-G	KL7019	690-432230C0-B0SP00-F000	PR3088Q
026-99963-0	KL7019	690-432230C0-B0SW00-B400	PR3093Q
026-99969-H	KL7072	690-432300C0-B00P00-A000	PR3094Q
0285 10 00	KL7072	690-432300C0-B00P00-A030	PR3095Q
0285 11 00	KL7117	690-432300C0-B00P00-A400	PR3096Q
0285 13 00	KL7117	690-432300C0-B00P00-A40P	PR3114Q
0285 14 00	KL7119	690-432300C0-B00P00-A430	PR3115Q
0285 17 00	KL7119	690-432300C0-B00P00-A43D	PR3116Q
0285 18 00	KL7138	690-432300C0-B00P00-A43P	PR3117Q

0285 21 00	KL7138	690-432300C0-B00P00-B430	PR3122Q
0285 22 00	KL7141	690-432300C0-B00P00-D000	PR3123Q
0285 27 00	KL7141	690-432300C0-B00P00-E000	PR3124Q
0285 34 00	KL7142	690-432300C0-B00P00-E43D	PR3125Q
029-145330	KL7142	690-432300C0-B00P00-E43P	PR3143Q
029-180004	KL7143	690-432300C0-B00P00-F000	PR3144Q
029-300052	KL7143	690-432300C0-B00P00-F030	PR3145Q
029-300090	KL7144	690-432300C0-B00P00-F03P	PR3146Q
029-300326	KL7144	690-432300C0-B00P00-F430	PR3151Q
029-300400	KL7149	690-432300C0-B00P00-G400	PR3152Q
029-300402	KL7149	690-432300C0-B00PK0-D000	PR3153Q
029-500000	KL7156	690-432300C0-B00W00-B400	PR3154Q
029-600002	KL7156	690-432300C0-B00W00-B40E	PR3172Q
029-600006	KL7162	690-432300C0-B00W07-B400	PR3173Q
029-600012	KL7162	690-432300C0-B0SP00-A000	PR3174Q
029-639011	KL7163	690-432300C0-B0SP00-A400	PR3175Q
029-649021	KL7163	690-432300C0-B0SP00-A40N	PR3180Q
029-649022	KL7205	690-432300C0-B0SP00-A430	PR3181Q
029-649024	KL7205	690-432300C0-B0SP00-D000	PR3182Q
029-649025	KL7222	690-432300C0-B0SP00-D400	PR3183Q
029-649026	KL7222	690-432300C0-B0SP00-E40P	PR3201Q
029-649028	KL7222	690-432300C0-B0SP00-F000	PR3202Q
029-649029	KL7222	690-432300C0-B0SW00-B400	PR3203Q
029-659000	KL7223	690-432310D0-000P00-A400	PR3204Q
029-659008	KL7223	690-432310D0-B00P00-A000	PR3209Q
029-659112	KL7224	690-432310D0-B00P00-A400	PR3210Q
029-689100	KL7224	690-432310D0-B00P00-A430	PR3211Q
029-690006	KL7224	690-432310D0-B00P00-A43L	PR3212Q
02E-85012-5	KL7224	690-432380D0-000P00-A000	PR322H001
02F20O1104ABFPH05	KL7225	690-432380D0-000P00-A400	PR322H005
02F20O1104ABFPH05	KL7225	690-432380D0-000P00-A430	PR323L001
02F30C1103AAFSB05	KL7226	690-432380D0-000P00-A43P	PR323L005
02F30C1103AAFSB05	KL7226	690-432380D0-000P00-D000	PR32M10S1PN9
02FA06A	KL7226	690-432380D0-000P00-F000	PR32M25A1PN9
02FA06A	KL7226	690-432380D0-000W00-B400	PR32M25L1PN9
02KAAM03MPN	KL7227	690-432380D0-B00P00-A000	PR32M25S1PN9
02KAAM03MPX	KL7227	690-432380D0-B00P00-A400	PR3435Q
02KAIM03MPN	KL7228	690-432380D0-B00P00-A430	PR3436Q
02KAIM03MPX	KL7228	690-432380D0-B00P00-A43D	PR3437Q
02KATF02MPN	KL7228	690-432380D0-B00P00-A43P	PR3438Q
02KATF02MPX	KL7228	690-432380D0-B00P00-A43R	PR3440Q
02KATF03MPC	KL7229	690-432380D0-B00P00-D000	PR3441Q
02KATF03MPN	KL7229	690-432380D0-B00P00-D400	PR3444Q
02KATF03MPX	KL7230	690-432380D0-B00P00-E43P	PR3446Q
02KATS02MPN	KL7230	690-432380D0-B00P00-F000	PR3455Q
02KATS02MPX	KL7230	690-432380D0-B00W00-B400	PR3456Q
02KATS03MPN	KL7230	690-432380D0-B0SP00-A000	PR364G02ASS
02KATS03MPX	KL7231	690-432380D0-B0SP00-A400	PR364G02ASS
02KFAM03MPN	KL7231	690-432380D0-B0SP00-F000	PR364G02BKSS
02SFAM03MXC	KL7231	690-432380D0-B0SW00-B400	PR364G02BKSS
02SFAM03MXN	KL7231	690-432450D0-000P00-A000	PR364G02BSS
02SFAM03MXX	KL7232	690-432450D0-000P00-A03L	PR364G02BSS
02SFIM03MXN	KL7232	690-432450D0-000P00-A400	PR364G02CKSS

02SFIM03MXX	KL7233	690-432450D0-000P00-A40C	PR364G02CKSS
02SFTF02MXN	KL7233	690-432450D0-000P00-A40P	PR364G02CSS
02SFTF02MXX	KL7234	690-432450D0-000P00-A430	PR364G02CSS
02SFTF03MXN	KL7234	690-432450D0-000P00-A43P	PR3MF
02SFTF03MXX	KL7235	690-432450D0-000P00-D000	PR3MH
02SFTS02MXN	KL7235	690-432450D0-000P00-E400	PR400SH
02SFTS02MXX	KL7236	690-432450D0-000P00-F000	PR4023Q
02SFTS03MXN	KL7236	690-432450D0-000PK0-D000	PR4028
02SFTS03MXX	KL7237	690-432450D0-000W00-B400	PR402H001
033-57181-0	KL7237	690-432450D0-B00P00-A000	PR402H005
033-59805-0K	KL7238	690-432450D0-B00P00-A00P	PR403L001
033-70500-0K	KL7238	690-432450D0-B00P00-A400	PR4374Q
033-70507-0K	KL7239	690-432450D0-B00P00-A430	PR4375Q
033-70525-0K	KL7239	690-432450D0-B00P00-A43L	PR4376Q
033-70576-0K	KL7260	690-432450D0-B00P00-A43P	PR4379Q
033-70577-0K	KL7260	690-432450D0-B00P00-B400	PR4380Q
033-70624-0K	KL7265	690-432450D0-B00P00-B430	PR4381Q
033-71261-0	KL7265	690-432450D0-B00P00-D000	PR4454Q
033-71371-0K	KL7266	690-432450D0-B00P00-E400	PR4455Q
033-71490-0K	KL7266	690-432450D0-B00P00-E430	PR4456Q
033-71569-0K	KL7288	690-432450D0-B00P00-E43D	PR4458Q
033-71575-0K	KL7288	690-432450D0-B00P00-E43P	PR4459Q
033-71611-0K	KL7290	690-432450D0-B00P00-F000	PR4460Q
033-71615-0K	KL7290	690-432450D0-B00P00-F400	PR4461
033-71619-0K	KL8003	690-432450D0-B00P00-F430	PR4465
033-72232-0K	KL8003	690-432450D0-B00P00-G000	PR4466
033-72378-0K	KL8004	690-432450D0-B00W00-B400	PR4467
033-72379-0K	KL8004	690-432450D0-B00W07-B400	PR4468
033-72532-0	KL8005	690-432450D0-B0SP00-A000	PR4469
033-72532-0K	KL8005	690-432450D0-B0SP00-A400	PR4471
033-85047-0	KL8006	690-432450D0-B0SP00-A40P	PR4472
033-91058-0K	KL8006	690-432450D0-B0SP00-A43P	PR4473
033-91067-0K	KL8007	690-432450D0-B0SP00-D000	PR4475
033-91107-0K	KL8007	690-432450D0-B0SP00-F000	PR4476
033-91150-0K	KL8008	690-432450D0-B0SW00-B400	PR4477
033-91190-0K	KL8008	690-432590D0-000P00-A000	PR4499
033-91653-0K	KL8009	690-432590D0-000P00-A400	PR4500Q
033-91706-0K	KL8009	690-432590D0-000P00-A40P	PR4501Q
034-16118-0	KL8018	690-432590D0-000P00-A43P	PR450476273
034-19579-0	KL8018	690-432590D0-000P00-D000	PR450476273A
034-21383-0	KL8025	690-432590D0-000P00-D43N	PR450476275
034-21396-0	KL8025	690-432590D0-000PK0-D000	PR450476275A
034-24327-0	KL8220	690-432590D0-000W00-B400	PR450476523
034-24581-0	KL8220	690-432590D0-B00P00-A000	PR450476525A
034-24848-0	KL8252	690-432590D0-B00P00-A03P	PR4504Q
034-24851-0	KL8252	690-432590D0-B00P00-A400	PR4505
034-24982-0	KL8254	690-432590D0-B00P00-A430	PR4506Q
034-24984-0	KL8254	690-432590D0-B00P00-A43P	PR4507Q
034-27257-0	KL8255	690-432590D0-B00P00-B400	PR4508
034-29899-0	KL8255	690-432590D0-B00P00-D000	PR4509Q
034-30168-0	KL8255	690-432590D0-B00P00-E000	PR4510Q
034-30270-0	KL8255	690-432590D0-B00P00-F000	PR4511Q
034-30873-0	KL8256	690-432590D0-B00W00-B400	PR4513

034-32062-0	KL8256	690-432590D0-B0SP00-A400	PR4514Q
034-37650-0	KL8257	690-432590D0-B0SP00-F000	PR4516Q
034-40954-0	KL8257	690-432590D0-B0SW00-B400	PR4518Q
034-40955-0	KL8257	690-432590E0-000P00-A000	PR4519Q
034-40997-0	KL8257	690-432590E0-B00P00-A000	PR4520Q
034-40998-0	KL8258	690-432590E0-B00P00-A400	PR4521Q
034-41676-0	KL8258	690-432590E0-B00P00-D000	PR4522Q
034-43276-0	KL8259	690-432590E0-B00P00-E400	PR4523Q
034-44628-0	KL8259	690-432590E0-B00P00-F000	PR4524Q
034-44872-0	KL8260	690-432730E0-000P00-A000	PR4525Q
034-44873-0	KL8260	690-432730E0-000P00-A00P	PR4526Q
034-45287-0	KL8264	690-432730E0-000P00-A400	PR4527Q
034-45289-0	KL8264	690-432730E0-000P00-A430	PR4528Q
034-46754-0	KL8266	690-432730E0-000P00-A43P	PR4529Q
034-46807-0	KL8266	690-432730E0-000P00-B400	PR4530Q
034-46809-0	KL8266	690-432730E0-000P00-D000	PR4531Q
034-47392-0	KL8266	690-432730E0-000P00-D430	PR4532Q
034-47393-0	KL8267	690-432730E0-000P00-D43N	PR4533Q
034-47399-0	KL8267	690-432730E0-000P00-E400	PR4534Q
034-48579-0	KL8268	690-432730E0-000PK0-D000	PR4535Q
034-48642-0	KL8268	690-432730E0-000W00-A400	PR4536Q
034-48643-0	KL8270	690-432730E0-000W00-B400	PR4537Q
034-48690-0	KL8270	690-432730E0-00SP00-A000	PR4538Q
034-49535-0	KL8273	690-432730E0-B00P00-A000	PR4539Q
034-49622-0	KL8273	690-432730E0-B00P00-A03P	PR4540Q
034-49676-0	KL8278	690-432730E0-B00P00-A400	PR4541Q
034-49743-0	KL8278	690-432730E0-B00P00-A430	PR4542Q
034-49975-0	KL8280	690-432730E0-B00P00-A43E	PR4543Q
034-49977-0	KL8280	690-432730E0-B00P00-A43P	PR502H001
034-53346-0	KL8281	690-432730E0-B00P00-B400	PR502H005
034-53588-0	KL8281	690-432730E0-B00P00-D000	PR503L001
034-59050-0	KL8413	690-432730E0-B00P00-F430	PR600SH
034-59051-0	KL8413	690-432730E0-B00W00-B400	PR602A-RAST
034-59052-0	KL8419	690-432730E0-B0SP00-A000	PR602H001
034-59053-0	KL8419	690-432730E0-B0SP00-A430	PR602H005
034-59054-0	KL9003	690-432730E0-B0SP00-F000	PR603L001
034-59057-0	KL9003	690-432730E0-B0SW00-B400	PR603L005
034-59098-0	KL9014	690-432870E0-000P00-A000	PR6MF
034-59099-0	KL9014	690-432870E0-000P00-A400	PR6PH
034-59101-0	KL9052	690-432870E0-000P00-A43P	PR702H001
034-59105-0	KL9052	690-432870E0-000P00-D000	PR702H005
034-59107-0	KL9052	690-432870E0-000P00-F000	PR800SH
034-59110-0	KL9052	690-432870E0-000PK0-D000	PR802A-RAST
034-59118-0	KL9057	690-432870E0-000W00-B400	PR802H001
034-59125-0	KL9057	690-432870E0-000W07-B400	PR803L001
034-59130-0	KL9073	690-432870E0-B00P00-A000	PR902H001
034-59131-0	KL9073	690-432870E0-B00P00-A400	PR922H001
034-59132-0	KL9074	690-432870E0-B00P00-A430	PR922H005
034-59133-0	KL9074	690-432870E0-B00P00-A43P	PRA2504S-027-S-R03P
034-59135-0	KL9081	690-432870E0-B00P00-D000	PRA2504S-027-S-R05P
034-59137-0	KL9081	690-432870E0-B00P00-E400	PRA2504S-181-S-S03P
034-59139-0	KL9112	690-432870E0-B00P00-E43P	PRA2508S-181-S-S05P
034-59161-0	KL9112	690-432870E0-B00P00-F000	PRA2508S-206-S-R03P

034-59162-0	KL9112	690-432870E0-B00P00-F430	PRA2508S-309-S-S05P
034-59206-0	KL9112	690-432870E0-B00P56-A400	PRA2510S-027-S-S03P
034-59207-0	KL9114	690-432870E0-B00W00-B400	PRA2510S-053-S-S03P
034-59208-0	KL9114	690-432870E0-B0SP00-A400	PRA2510S-130-H-R05P
034-59209-0	KL9114	690-432870E0-B0SP00-F000	PRA2510S-155-S-S03F
034-59245-0	KL9114	690-432870E0-B0SW00-B400	PRA2510S-206-S-S05F
034-59294-0	KL9115	690-433105F1-000P00-A000	PRA2510S-309-S-S05P
034-59412-0	KL9115	690-433105F1-000P00-A400	PRA3810S-033-S-S05P
034-59423-0	KL9117	690-433105F1-000P00-B400	PRA3810S-247-S-R03P
034-59425-0	KL9117	690-433105F1-000P00-F400	PRA3810S-282-S-S05P
034-59772-0	KL9118	690-433105F1-B00P00-A000	PRA3810S-318-S-S05F
034-59773-0	KL9118	690-433105F1-B00P00-A400	PRA3810S-318-S-S05P
034-59774-0	KL9118	690-433105F1-B00P00-B400	PRB4-1/2
034-59776-0	KL9118	690-433105F1-B0SP00-A40R	PRB4-1/4
034-59777-0	KL9129	690-433105F1-B0SP00-B400	PRB4-1/8
034-59901-0	KL9129	690-433105F2-000P00-A000	PRB4PB6-1/4
034-65675-0	KL9131	690-433105F2-000P00-A400	PRB4PB6-1/8
034-65875-0	KL9131	690-433105F2-000P00-A430	PRB4PB8-1/4
034-65880-0	KL9132	690-433105F2-000P00-B000	PRC2506S-S-R05P
034-65950-0	KL9132	690-433105F2-000P00-D000	PRC2508S-S-R05P
034-65957-0	KL9135	690-433105F2-000PK0-D000	PRC2508S-S-R08P
034-65958-0	KL9135	690-433105F2-B00P00-A000	PRC2510S-S-R05P
034-65960-0	KL9137	690-433105F2-B00P00-A03P	PRC2510S-S-R07P
034-65961-0	KL9137	690-433105F2-B00P00-A400	PRC3808P-S-R05P
034-65962-0	KL9138	690-433105F2-B00P00-A430	PRC3808S-S-R03P
034-66010-0	KL9138	690-433105F2-B00P00-A43P	PRC3810P-S-C0
034-66015-0	KL9141	690-433105F2-B00P00-D000	PRC3810P-S-R05P
034-66027-0	KL9141	690-433105F2-B00P00-E430	PRC3810S-S-R05F
034-66032-0	KL9143	690-433105F2-B00P00-F000	PRC3MH
034-66033-0	KL9143	690-433105F2-B0SP00-D000	PRC3PF
034-66099-0	KL9178	690-433105F2-B0SP00-F000	PRC3PH
034-66182-0	KL9178	690-433145F1-000P00-A000	PRC6MH
034-66188-0	KL9180	690-433145F1-000P00-A400	PRC6PH
034-66226-0	KL9180	690-433145F1-000P00-B400	PRD-A10
034-66243-0	KL9185	690-433145F1-B00P00-A000	PRD-A10
034-66309-0	KL9185	690-433145F1-B00P00-A400	PRD-A12
034-66334-0	KL9186	690-433145F1-B00P00-A430	PRD-A12
034-66453-0	KL9186	690-433145F1-B00P00-A43E	PRDM2AA02KVG
034-66467-0	KL9188	690-433145F1-B00P00-B400	PRDM2AA02LVG
034-66493-0	KL9188	690-433145F1-B0SP00-A000	PRDM2AA02LVM
034-66495-0	KL9190	690-433145F1-B0SP00-A00E	PRDM2AA02SVG
034-66500-0	KL9190	690-433145F1-B0SP00-A400	PRDM2AA02SVGX797
034-66508-0	KL9191	690-433145F1-B0SP00-B400	PRDM2AA02SVGX825
034-66509-0	KL9191	690-433145F2-000P00-A000	PRDM2AA02SVM
034-66511-0	KL9192	690-433145F2-000P00-A400	PRDM2AA06KVG
034-66513-0	KL9192	690-433145F2-000P00-A40P	PRDM2AA06LVG
034-66523-0	KL9193	690-433145F2-000P00-A43P	PRDM2AA06LVGX797
034-66537-0	KL9193	690-433145F2-000P00-D000	PRDM2AA06LVM
034-66538-0	KL9193	690-433145F2-000P00-E400	PRDM2AA06SVG
034-66541-0	KL9193	690-433145F2-B00P00-A000	PRDM2AA06SVGX797
034-66543-0	KL9194	690-433145F2-B00P00-A400	PRDM2AA06SVGX825
034-66546-0	KL9194	690-433145F2-B00P00-A40P	PRDM2AA06SVM
034-66547-0	KL9194	690-433145F2-B00P00-A430	PRDM2AA16KVG

034-66551-0	KL9194	690-433145F2-B00P00-A43P	PRDM2AA16KVS
034-66553-0	KL9195	690-433145F2-B00P00-F000	PRDM2AA16LVG
034-66564-0	KL9195	690-433145F2-B0SP00-F000	PRDM2AA16SVG
034-66566-0	KL9196	690-433156F1-000P00-A000	PRDM2AA16SVGX797
034-66578-0	KL9196	690-433156F1-000P00-A400	PRDM2AA16SVGX825
034-66579-0	KL9196	690-433156F1-000P00-B400	PRDM2AA16SVM
034-66595-0	KL9196	690-433156F1-00SP00-B400	PRDM2AA16SVS
034-66596-0	KL9197	690-433156F1-B00P00-A000	PRDM2AA21KVG
034-66607-0	KL9197	690-433156F1-B00P00-A400	PRDM2AA21LVG
034-66634-0	KL9197	690-433156F1-B00P00-B400	PRDM2AA21SVC
034-66635-0	KL9197	690-433156F2-000P00-A400	PRDM2AA21SVG
034-66641-0	KL9198	690-433156F2-000P00-A43N	PRDM2AA21SVGX797
034-66653-0	KL9198	690-433156F2-000P00-F400	PRDM2AA35KVG
034-66675-0	KL9198	690-433156F2-000PT0-B400	PRDM2AA35LVG
034-66690-0	KL9198	690-433156F2-00SP00-F000	PRDM2AA35SVG
034-66708-0	KL9199	690-433156F2-B00P00-A000	PRDM2BB02KVC
034-66716-0	KL9199	690-433156F2-B00P00-A400	PRDM2BB02LVG
034-66737-0	KL9205	690-433156F2-B00P00-A430	PRDM2BB02LVM
034-66748-0	KL9205	690-433156F2-B00P00-A43P	PRDM2BB02SVG
034-66765-0	KL9206	690-433156F2-B00P00-E43P	PRDM2BB06KVG
034-66783-0	KL9206	690-433156F2-B00P00-F000	PRDM2BB06KVS
034-66784-0	KL9207	690-433156F2-B0SP00-F000	PRDM2BB06LVG
034-66785-0	KL9207	690-433180F1-000P00-A000	PRDM2BB06LVGX797
034-66786-0	KL9207	690-433180F1-000P00-A400	PRDM2BB06LVM
034-66793-0	KL9207	690-433180F1-000P00-B400	PRDM2BB06SNG
034-66823-0	KL9208	690-433180F1-00SP00-B400	PRDM2BB06SVG
034-66825-0	KL9208	690-433180F1-B00P00-A40R	PRDM2BB06SVGX797
034-66843-0	KL9209	690-433180F1-B00P00-A430	PRDM2BB06SVM
034-66882-0	KL9209	690-433180F1-B00P00-B400	PRDM2BB16KVG
034-66890-0	KL9210	690-433180F1-B0SP00-B400	PRDM2BB16LVG
034-66909-0	KL9210	690-433180F2-000P00-A000	PRDM2BB16LVGX797
034-66910-0	KL9211	690-433180F2-000P00-A400	PRDM2BB16LVM
034-66911-0	KL9211	690-433180F2-B00P00-A000	PRDM2BB16SNG
034-66912-0	KL9211	690-433180F2-B00P00-A400	PRDM2BB16SVC
034-66913-0	KL9211	690-433180F2-B00P00-A430	PRDM2BB16SVG
034-66914-0	KL9212	690-433361G1-000P00-A400	PRDM2BB16SVGX797
034-66915-0	KL9212	690-531500B0-B00P00-A400	PRDM2BB16SVGX825
034-66917-0	KL9216	690-531500B0-B00P00-A430	PRDM2BB16SVM
034-66921-0	KL9216	690-531500B0-B00W00-B400	PRDM2BB21KVG
034-66922-0	KL9217	690-531500B0-BF0P00-A000	PRDM2BB21LVG
034-66923-0	KL9217	690-531500B0-BF0P00-A400	PRDM2BB21SVC
034-66926-0	KL9218	690-531500B0-BF0P00-B03P	PRDM2BB21SVG
034-66929-0	KL9218	690-531500B0-BF0P00-D000	PRDM2BB21SVGX797
034-66930-0	KL9218	690-531500B0-BFSP00-D000	PRDM2BB35KVG
034-66942-0	KL9218	690-531800B0-B00P00-A400	PRDM2BB35SVG
034-66982-0	KL9219	690-531800B0-B00P00-F000	PRDM2PP02KVG
034-66984-0	KL9219	690-531800B0-BF0P00-A400	PRDM2PP02KVM
034-66985-0	KL9220	690-531800B0-BF0P00-B430	PRDM2PP02LVG
034-66991-0	KL9220	690-531800B0-BF0P00-L400	PRDM2PP02LVM
034-67003-0	KL9221	690-531800B0-BFSP00-A400	PRDM2PP02SVC
034-67028-0	KL9221	690-532140C0-B00P00-A400	PRDM2PP02SVG
034-67032-0	KL9222	690-532140C0-B00P00-B000	PRDM2PP02SVGX825
034-67034-0	KL9222	690-532140C0-B00P00-B400	PRDM2PP02SVM

034-67063-0	KL9223	690-532140C0-B0SP00-A400	PRDM2PP02SVS
034-67083-0	KL9223	690-532210C0-B00P00-A000	PRDM2PP06KVG
034-67092-0	KL9228	690-532210C0-B00P00-A40P	PRDM2PP06KVS
034-67093-0	KL9228	690-532210C0-B00P08-A000	PRDM2PP06LVC
034-67100-0	KL9234	690-532210C0-B00P08-A400	PRDM2PP06LVG
034-67107-0	KL9234	690-532270C0-B00P00-A400	PRDM2PP06LVGX797
034-67111-0	KL9235	690-532270C0-B00P00-B40P	PRDM2PP06LVM
034-67112-0	KL9235	690-532270C0-B00P00-D000	PRDM2PP06SNG
034-67113-0	KL9236	690-532420D0-000W00-A400	PRDM2PP06SVC
034-67114-0	KL9236	690-532420D0-B00P00-A400	PRDM2PP06SVG
034-67127-0	KL9237	690-532420D0-B00P00-A430	PRDM2PP06SVGX797
034-67153-0	KL9237	690-532520D0-B00P00-A400	PRDM2PP06SVGX825
034-67155-0	KL9238	690-532520D0-B00P00-A430	PRDM2PP06SVM
034-67156-0	KL9238	690-532520D0-B00P00-D40N	PRDM2PP06SVS
034-67157-0	KL9239	690-532520D0-B00P90-A000	PRDM2PP16KVG
034-67159-0	KL9239	690-532730E0-000P00-A400	PRDM2PP16KVS
034-67309-0	KL9240	690-532870E0-B00P00-A000	PRDM2PP16LVC
034-67313-0	KL9240	690-532870E0-B00P00-A43P	PRDM2PP16LVG
034-67329-0	KL9241	690-532870E0-B00P00-F43P	PRDM2PP16LVGX797
034-67333-0	KL9241	690-532870E0-B00P90-A000	PRDM2PP16LVM
034-67383-0	KL9242	690-533105F1-B0SP00-A40R	PRDM2PP16SNG
034-67405-0	KL9242	690-533105F2-B00P00-A400	PRDM2PP16SVC
034-67407-0	KL9243	690-533105F2-B00P00-A43P	PRDM2PP16SVG
034-67408-0	KL9243	690-533145F2-B00P00-A400	PRDM2PP16SVGX738
034-67409-0	KL9271	690-533145F2-B00P00-A43P	PRDM2PP16SVGX797
034-67434-0	KL9271	690-533145F2-B00P90-A000	PRDM2PP16SVGX825
034-67435-0	KL9272	690-533156F2-B00P00-A400	PRDM2PP16SVGX862
034-67447-0	KL9272	690-533156F2-B00P90-A000	PRDM2PP16SVM
034-67453-0	KL9273	69089G	PRDM2PP16SVS
034-67455-0	KL9273	69090G	PRDM2PP21KVG
034-67461-0	KL9274	69091G	PRDM2PP21KVGX797
034-67469-0	KL9274	69092G	PRDM2PP21KVM
034-67470-0	KL9284	69093G	PRDM2PP21KVS
034-67474-0	KL9284	69094G	PRDM2PP21LVG
034-67482-0	KL9285	69095G	PRDM2PP21SNG
034-67496-0	KL9285	69096G	PRDM2PP21SVC
034-67505-0	KL9424	69097G	PRDM2PP21SVG
034-67506-0	KL9424	69098G	PRDM2PP21SVGX797
034-67508-0	KL9425	69099G	PRDM2PP21SVGX825
034-67509-0	KL9425	690R10	PRDM2PP21SVGX862
034-67628-0	KL9437	690R10MTC	PRDM2PP21SVM
034-67783-0	KL9437	690R2430MTC	PRDM2PP35KVG
034-67947-0	KL9438	690R30	PRDM2PP35LVG
034-70263-0	KL9438	690R30MTC	PRDM2PP35SVG
034-70265-0	KL9439	690RP30	PRDM2PP35SVGX797
034-70271-0	KL9439	691-00143-0	PRDM2PX02SVG
034-70330-0	KL9440	691-00219-0	PRDM2PX06SVG
034-70814-0	KL9440	691-00225-0	PRDM3AA01LVG
034-70815-0	KL9443	691-00228-0	PRDM3AA01SVG
034-70858-0	KL9443	691-00325-8	PRDM3AA05LVG
034-70866-0	KL9483	691-00338-8	PRDM3AA05SVG
034-70868-0	KL9483	69100G	PRDM3AA10LVG
034-70880-0	KM BODY DIE M20	6911-01-00-G	PRDM3AA10SVG

034-70982-0	KM05MN	691-10137-0	PRDM3AA15LVG
034-71076-0	KM06M	691-10149-0	PRDM3AA15SVG
034-71088-0	KM07M	691-10153-0	PRDM3AA15SVGXG136
034-71278-0	KM07MC	691-10156-0	PRDM3AA21LVG
034-71315-0	KM07MN	691-10225-0	PRDM3AA21SVG
034-71327-0	KM07MR	691-10226-0	PRDM3BB01LVG
034-71361-0	KM08M	691-10229-0	PRDM3BB01SVG
034-71363-0	KM08MN	691-10232-0	PRDM3BB05LVG
034-71364-0	KM10M	691-10235-0	PRDM3BB05SVG
034-71408-0	KM10MC	691-10237-0	PRDM3BB10LVG
034-71415-0	KM10MDX	691-10238-0	PRDM3BB10SVG
034-71416-0	KM10MN	691-10242-0	PRDM3BB10SVM
034-71809-0	KM10MR	691-10244-0	PRDM3BB15LVG
034-71867-0	KM10W	691-10248-0	PRDM3BB15SVG
035-0062-032-36	KM10WN	691-10252-0	PRDM3BB15SVGXG136
035-0125-062-72	KM12M	691-10253-0	PRDM3BB21LVG
035-019010	KM12MC	691-10256-0	PRDM3BB21SVG
035-019350	KM12MN	692-10	PRDM3BB21SVM
035-400004	KM12MR	692-10-10	PRDM3PP01LVG
035-400015	KM13W	692-4	PRDM3PP01SVG
0354P	KM13WN	692-4-4	PRDM3PP05LVG
035642000B	KM13WR	692-4-4-DL	PRDM3PP05SVG
035642000B	KM14M	692-5	PRDM3PP10LVG
035-800650	KM14MN	692-5-5	PRDM3PP10LVM
035-800914	KM16M	692-6	PRDM3PP10SVG
035-800916	KM17W	692-6-6	PRDM3PP10SVGX825
035-800917	KM17WN	692-8	PRDM3PP10SVGXG136
035-800919	KM20MN	692-8-8	PRDM3PP15LVG
035-800936	KM21W	6933P1601	PRDM3PP15SVG
035-800961	KM21WN	6933P2002	PRDM3PP15SVGX825
035-800970	KM25MN	694-00007-0	PRDM3PP15SVGXG136
035-800971	KM26W	694-00012-0	PRDM3PP21LVG
035-800972	KM26WN	694-00015-0	PRDM3PP21SVG
035-800975	KMBBG0/2-B	694-000162-002	PRDM3PP21SVGXG136
035-800976	KMBNX-6-04	694-00020-0	PRE-A10
035-800977	KMCT-H	694-00026-0	PRE-A10
035-800979	KMCT-M	694-00027-0	PRE-A12
035-801000	KMU47-4-4	694-00028-0	PRE-A12
035-803001	KMU47-6-4	694-00114-0	PRF102/100S
035-803105	KMU47-6-6	694-00117-0	PRF102/102S
035-830000	KMU47-8-8	694-00118-0	PRF102/403S
036-11692-0	KN06	694-00119-0	PRF104/102S
036-11694-0	KN06C	694-00124-0	PRF104/104S
036-12288-0	KN06N	694-00131-0	PRF106/104S
036-12289-0	KN06R	694-00138-0	PRF106/106S
036-13244-0	KN08	694-00218-0	PRF108/106S
036-13245-0	KN08C	694-00222-0	PRF108/106SS
036-13996-0	KN08N	694-00225-0	PRF108/108S
036-14679-0	KN08R	694-00903-0	PRF110/106S
036-16225-0	KN10	6947Q	PRF110/108S
036-16226-0	KN10N	695-00007-0	PRF110/110S
036-16227-0	KN10R	695-00016-0	PRF112/110CF
036-16230-0	KN12	695-00018-0	PRF112/110S

036-17192-0	KN12N	695-00020-0	PRF112/112S
036-19092-0	KN15KD_01	695-00022-0	PRF402/402S
036-21015-0	KN15KD_02	695-00026-0	PRF403/102S
036-21021-0	KNH-03	695-00027-0	PRF403/402S
036-21022-0	KNH254	695-00028-0	PRF403/403S
036-21318-0	KNH255	695-00116-0	PRF404/403S
036-21319-0	KNH6108PU	695-00119-0	PRF404/404S
036-21320-0	KNHA2106PU	695-00120-8	PRF405/403S
036-21765-0	KNH-RS-08	695-00124-0	PRF405/404S
036-21767-0	KNOB/3002498	695-00125-0	PRF405/405S
036-22002-0	KNOB/3002498	695-00128-0	PRF405/405SS
036-22068-0	KNOB/3003114	695-00131-0	PRF406/405S
036-22080-0	KNOB/3003114	695-00143-0	PRF406/406G14S
036-22250-0	KNOB/3004030	695-00214-0	PRF406/406S
036-22461-0	KNOB/3004030	695-00216-0	PRF408/406S
036-22489-0	KNOB/3004042	695-00219-0	PRF408/406SS
036-23767-0	KNOB/3004042	695-00221-0	PRF410/406S
036-24030-0	KNOB/3004049	695-00222-0	PRF448-440S
036-24504-0	KNOB/3004049	695-00223-0	PRF50SE-280-40
036-24527-0	KNOB/3004110	695-00225-0	PRF50SE-280-40
036-24619-0	KNOB/3004110	695-00226-0	PRF-A10
036-24620-0	KNOB/3004136	695-00228-0	PRF-A10
036-27547-0	KNOB/3004136	695-00229-0	PRF-A12
036-27548-0	KNOB/S51027	695-00231-0	PRF-A12
036-27549-0	KNOB/S51027	695-00903-0	PRG-12.5X23-NBR
036-27550-0	KNOB/S51028	695-00904-0	PRG-12.5X23-NBR
036-28742-0	KNOB/S51028	695-10156-0	PRG-12.5X23-SI
036-28784-0	KNOB/S51147	696FIL	PRG-12.5X23-SI
036-32023-0	KNOB/S51147	696FIL	PRG-32X32-SI
036-32024-0	KNOB/S51151	6A6M-C6L-5-SS	PRG-32X32-SI
036-32376-0	KNOB/S51151	6A-B6LJ2-BN-SSP	PRG-9.5X25-SI
036-32465-0	KNOB/S51152	6A-B6LJ2-BP	PRG-9.5X25-SI
036-32511-0	KNOB/S51152	6A-B6LJ2-BP-C3	PRH081K10
036-32574-0	KNPC/D-05.0	6A-B6LJ2-EPR-SSP	PRH081K20
036-32803-0	KNPC637+/631-03.0	6A-B6LJ2-SSP	PRH081S10
036-32902-0	KNPC637+/631-05.0	6A-B6LJ2-SSP-C3	PRH081S20
036-33022-0	KOL01-020000	6A-B6LJ2-V-SSP	PRH081S30
036-33023-0	KOL01-030000	6A-B6LJ-BP	PRH081S50
036-33024-0	KOL01-082000	6A-B6LJ-SSP	PRH081T20
036-33025-0	KOL01-102000	6A-B6LJ-SSP-C3	PRH081T30V
036-33045-0	KOL03-001000	6A-B6LJ-V-SSP	PRH082S10
036-33056-0	KOL03-004000	6A-B6XJ2-BP	PRH082S30
036-33274-0	KOL03-012000	6A-B6XJ2-SSP	PRH082S50
036-33278-0	KOL03-020000	6A-B6XJ2-V-SSP	PRH101K30
036-33279-0	KOL03-034000	6A-B6XJ-BP	PRH101S30
036-33347-0	KONU04LL	6A-B6XJ-SSP	PRH101T20V
036-33348-0	KONU06L	6A-B6XJ-SSP-C3	PRH121S20V
036-33350-0	KONU06LL	6A-B6XJ-V-SSP	PRH161S50
036-33423-0	KONU08L	6A-B6XS2-SSP	PRH162S10
036-33474-0	KONU08LL	6A-B6XS2-V-SSP	PRH162S50
036-33657-0	KONU10L	6A-C4L-1/3-B	PRHA20S-180-90W/O-BV
036-33658-0	KONU10LL	6A-C4L-1/3-BN-SS	PRHA20S-180-90W/O-BV
036-33660-0	KONU12L	6A-C4L-1/3-SS	PRIPB6

036-35242-0	KONU12LL	6A-C4L-10-B	PRK364KYSS
036-35943-0	KONU14S	6A-C4L-10-BN-SS	PRK364KYSS
036-36067-0	KONU15L	6A-C4L-10-SS	PRM3AA07KV
036-36277-0	KONU16S	6A-C4L-1-B	PRM3AA07LV
036-36278-0	KONU18L	6A-C4L-1-EPR-SS	PRM3AA07SV
036-36280-0	KONU20S	6A-C4L-1-SS	PRM3AA17KV
036-36281-0	KONU22L	6A-C4L-25-BN-SS	PRM3AA17LV
036-36282-0	KONU25S	6A-C4L-25-SS	PRM3AA17SV
036-36283-0	KONU28L	6A-C4L-50-BN-SS	PRM3AA25KV
036-36284-0	KONU30S	6A-C4L-5-B	PRM3AA25LV
036-36285-0	KONU35L	6A-C4L-5-BN-SS	PRM3AA25SN
036-36286-0	KONU38S	6A-C4L-5-SS	PRM3AA25SV
036-36288-0	KONU42L	6A-C4L-75-SS	PRM3AA35KV
036-36289-0	KOR06/04LLCF	6A-C6L-1/3-BN-SS	PRM3AA35SV
036-36292-0	KOR06/04LLOMDCF	6A-C6L-1/3-BN-SS-C3	PRM3BB07KV
036-36293-0	KOR06/08L71	6A-C6L-1/3-SS	PRM3BB07LV
036-36401-0	KOR06L/04LLCF	6A-C6L-100-SS	PRM3BB07SV
036-36402-0	KOR06L/04LLOMDCF	6A-C6L-10-BN-SS	PRM3BB17KV
036-36404-0	KOR08/04LLCF	6A-C6L-10-EPR-SS	PRM3BB17LV
036-36405-0	KOR08/04LLOMDCF	6A-C6L-10-SS	PRM3BB17SV
036-36423-0	KOR08/06L71	6A-C6L-1-BN-SS	PRM3BB25KV
036-36424-0	KOR08/06LCF	6A-C6L-1-EPR-SS	PRM3BB25LV
036-36432-0	KOR08/06LLCF	6A-C6L-1-SS	PRM3BB25SV
036-36433-0	KOR08/06LLOMDCF	6A-C6L-25-BN-SS	PRM3BB35LV
036-36435-0	KOR08/06LMS	6A-C6L-25-SS	PRM3BB35SV
036-36436-0	KOR08/06LOMD71	6A-C6L-50-BN-SS	PRM3PP07KV
036-36438-0	KOR08/06LOMDCF	6A-C6L-50-SS	PRM3PP07LV
036-36439-0	KOR08/06S71	6A-C6L-5-BN-SS	PRM3PP07SV
036-36440-0	KOR08/06SCF	6A-C6L-5-EPR-SS	PRM3PP17KV
036-36443-0	KOR08/06SOMDCF	6A-C6L-5-SS	PRM3PP17LV
036-36452-0	KOR08L/04LLOMDCF	6A-C6L-75-SS	PRM3PP17SV
036-36507-0	KOR10/06L71	6A-CO6L-10-V-SS	PRM3PP25KV
036-36518-0	KOR10/06LCF	6A-CO6L-1-KZ-SS	PRM3PP25LV
036-36524-0	KOR10/06LMS	6A-CO6L-1-V-SS	PRM3PP25SN
036-36529-0	KOR10/06LOMD71	6A-CO6L-25-KZ-SS	PRM3PP25SV
036-36530-0	KOR10/06LOMDCF	6A-CO6L-5-V-SS	PRM3PP35KV30
036-36534-0	KOR10/06LOMDMS	6A-F4L-100-SS	PRM3PP35LV
036-36535-0	KOR10/06S71	6A-F4L-50-SS	PRM3PP35SV
036-36548-0	KOR10/06SCF	6A-F4L-5-SS	PRM4PA35SVHT
036-36550-0	KOR10/06SOMD71	6A-F6L-100-B	PRM4PP07SVHT
036-36558-0	KOR10/06SOMDCF	6A-F6L-100-BN-B	PRM4PP25SVHT
036-36559-0	KOR10/08L71	6A-F6L-100-SS	PRM4PP35SVHT
036-36560-0	KOR10/08LCF	6A-F6L-10-EPR-SS	PRM6AP07KVG
036-36562-0	KOR10/08LDPR71MS	6A-F6L-10-SS	PRM6AP17KNG
036-36566-0	KOR10/08LMS	6A-F6L-1-EPR-SS	PRM6AP17KVG
036-36570-0	KOR10/08LOMD71	6A-F6L-1-SS	PRM6AP25KVG
036-36571-0	KOR10/08LOMDCF	6A-F6L-250-SS	PRM6AP25LVG
036-36572-0	KOR10/08S71	6A-F6L-50-B	PRM6PA07KVG
036-36574-0	KOR10/08SCF	6A-F6L-50-BN-SS	PRM6PA17KNG
036-36575-0	KOR10/08SMS	6A-F6L-50-EPR-SS	PRM6PA17KVG
036-36576-0	KOR10/08SOMD71	6A-F6L-50-SS	PRM6PA17LVG
036-36578-0	KOR10/08SOMDCF	6A-F6L-5-B	PRM6PA25KVG
036-36582-0	KOR10L/04LLCF	6A-F6L-5-BN-SS	PRM6PA25LVG

036-36598-0	KOR10L/04LLOMDCF	6A-F6L-5-EPR-SS	PRM6PA35KVG
036-36603-0	KOR10S/10LCF	6A-F6L-5-SS	PRN10S-PS
036-36610-0	KOR12/06L71	6A-FT8-100-EPR-SS	PRN10S-PS
036-36615-0	KOR12/06LCF	6A-FT8-100-SS	PRN150DE-100-40
036-36621-0	KOR12/06LCFX	6A-FT8-10-KZ-SS	PRN150DE-100-40
036-36622-0	KOR12/06LMS	6A-FT8-10-SS	PRN150DE-90-45
036-36623-0	KOR12/06LOMD71	6A-FT8-1-KZ-SS	PRN150DE-90-45
036-36624-0	KOR12/06LOMDCF	6A-FT8-1-SS	PRN150D-PS
036-36626-0	KOR12/06LSPH71	6A-FT8-250-SS	PRN150D-PS
036-36627-0	KOR12/06S71	6A-FT8-50-SS	PRN150-L
036-36628-0	KOR12/06SCF	6A-FT8-5-BN-SS	PRN150-L
036-36629-0	KOR12/06SOMD71	6A-FT8-5-SS	PRN150SE-180-45
036-36630-0	KOR12/06SOMDCF	6A-HB4XK-SSP	PRN150SE-180-45
036-36631-0	KOR12/08L71	6A-HB4XPKR-BN-SSP	PRN150SE-270-45
036-36632-0	KOR12/08LCF	6A-HB4XPKR-SSP	PRN150SE-270-45
036-36634-0	KOR12/08LDPR71MS	6A-LC12L-SS	PRN150SE-280-40
036-36635-0	KOR12/08LMS	6A-MB6APFA-BP	PRN150SE-280-40
036-36648-0	KOR12/08LOMD71	6A-MB6APFA-SSP	PRN150SE-90-45
036-36649-0	KOR12/08LOMDCF	6A-MB6LPFA-BP	PRN150SE-90-45
036-36655-0	KOR12/08LSPH71	6A-MB6LPFA-SSP	PRN20-L
036-36670-0	KOR12/08S71	6A-MB6LPFA-SSP-C3	PRN20-L
036-36684-0	KOR12/08SCF	6A-MB6XPFA-SSP	PRN20-P
036-36712-0	KOR12/08SMS	6A-NLL-BN-SS-K	PRN20-P
036-36713-0	KOR12/08SOMD71	6A-NLL-EPR-SS-V	PRN300DE-100-40
036-36748-0	KOR12/08SOMDCF	6A-NLL-V-SS-K	PRN300DE-100-40
036-36749-0	KOR12/10L71	6A-NLL-V-SS-V	PRN300DE-90-45
036-36751-0	KOR12/10LCF	6A-NP6AK-SSP	PRN300DE-90-45
036-36755-0	KOR12/10LDPR71CF	6A-NP6AR-SSP	PRN300SE-180-45
036-36775-0	KOR12/10LDPR71MS	6A-NP6LK-SSP	PRN300SE-180-45
036-36814-0	KOR12/10LMS	6A-NP6LK-SSP-C3	PRN300SE-270-45
036-36815-0	KOR12/10LOMD71	6A-NP6LK-V-SSP	PRN300SE-270-45
036-36895-0	KOR12/10LOMDCF	6A-NP6LR-BN-SSP	PRN300SE-280-40
036-36896-0	KOR12/10LOMDMS	6A-NP6LR-G-SSP	PRN300SE-280-40
036-36977-0	KOR12/10S71	6A-NP6LR-SSP	PRN300SE-90-45
036-38006-0	KOR12/10SCF	6A-NP6LR-SSP-C3	PRN300SE-90-45
036-38442-0	KOR12/10SMS	6A-NP6LR-V-SSP	PRN300S-PS
036-38443-0	KOR12/10SOMD71	6A-PG4TL-SS	PRN300S-PS
036-38444-0	KOR12/10SOMDCF	6A-PR4-VT-B	PRN30DE-90-45
036-38445-0	KOR12L/04LLCF	6A-PR4-VT-SS	PRN30DE-90-45
036-38446-0	KOR12L/04LLOMDCF	6A-PR6-EPRT-SS	PRN30-L
036-38447-0	KOR14/06SCF	6A-PR6-VT-B	PRN30-L
036-38448-0	KOR14/06SOMDCF	6A-PR6-VT-SS	PRN30-P
036-38449-0	KOR14/08S71	6A-SWB4L-RT-V-SS	PRN30-P
036-38450-0	KOR14/08SCF	6A-U12LB-G-SS	PRN30SE-180-45
036-38454-0	KOR14/08SOMDCF	6A-U12LB-G-SS-HT	PRN30SE-180-45
036-38464-0	KOR14/10S71	6A-U12LB-T-SS	PRN30SE-270-45
036-38465-0	KOR14/10SCF	6A-U12LR-G-SS	PRN30SE-270-45
036-38466-0	KOR14/10SMS	6A-U12LR-G-SS-HT	PRN30SE-90-45
036-38473-0	KOR14/10SOMD71	6A-U12LR-T-SS	PRN30SE-90-45
036-38549-0	KOR14/10SOMDCF	6A-V4LN-B	PRN30S-PS
036-38563-0	KOR14/12S71	6A-V4LN-BN-SS	PRN30S-PS
036-38631-0	KOR14/12SCF	6A-V4LN-SS	PRN3-L
036-38632-0	KOR14/12SOMDCF	6A-V4LR-B	PRN3-L

036-38748-0	KOR15/06L71	6A-V4LR-SS	PRN3-P
036-38907-0	KOR15/06LCF	6A-V4LR-V-SS	PRN3-P
036-39834-0	KOR15/06LDPR71MS	6A-V6AN-B	PRN50D-100-40
036-39844-0	KOR15/06LMS	6A-V6AN-SS	PRN50D-100-40
036-39845-0	KOR15/06LOMDCF	6A-V6AR-SS	PRN50DE-100-40
036-39863-0	KOR15/06LOMDMS	6A-V6LK-B	PRN50DE-100-40
036-39865-0	KOR15/08L71	6A-V6LK-SS	PRN50DE-90-45
036-39873-0	KOR15/08LCF	6A-V6LK-SS-C3	PRN50DE-90-45
036-39874-0	KOR15/08LMS	6A-V6LN-B	PRN50D-PS
036-39875-0	KOR15/08LOMD71	6A-V6LN-EPR-SS	PRN50D-PS
036-39889-0	KOR15/08LOMDCF	6A-V6LN-SS	PRN50-L
036-39923-0	KOR15/08LOMDMS	6A-V6LQ-11AC-SS	PRN50-L
036-39926-0	KOR15/10L71	6A-V6LQ-11AO-SS	PRN50-P
036-39947-0	KOR15/10LCF	6A-V6LQ-11AO-SS-C3	PRN50-P
036-39950-0	KOR15/10LDPR71MS	6A-V6LQ-KZ-11AC-SS	PRN50SE-180-45
036-39964-0+PLUG	KOR15/10LMS	6A-V6LQ-KZ-11AO-SS	PRN50SE-180-45
036-39982-0	KOR15/10LOMD71	6A-V6LQ-KZ-SSP	PRN50SE-270-45
036-39984-0	KOR15/10LOMDCF	6A-V6LQ-SSP	PRN50SE-270-45
036-41667-0	KOR15/10LOMDMS	6A-V6LQ-SSP-C3	PRN50SE-280-40
036-43914-0	KOR15/12L71	6A-V6LR-B	PRN50SE-280-40
036-43915-0	KOR15/12LCF	6A-V6LR-SS	PRN50S-PS
036-43932-0	KOR15/12LDPR71MS	6AY5X-16-12C	PRN50S-PS
036-45028-0	KOR15/12LMS	6B2TU6-316	PRN800DE-100-40
036-45248-0	KOR15/12LOMD71	6BAMJ4FL4	PRN800DE-100-40
036-47262-0	KOR15/12LOMDCF	6BBMTXS	PRN800DE-90-45
036-47263-0	KOR15/12LOMDMS	6BBMTXSS	PRN800DE-90-45
036-47265-0	KOR16/06S71	6BC6-316	PRN800SE-180-45
036-48222-0	KOR16/06SCF	6BC6-6MO	PRN800SE-180-45
036-48447-0	KOR16/06SOMDCF	6BC6-825	PRN800SE-270-45
036-48448-0	KOR16/08S71	6BC6-B	PRN800SE-270-45
036-48933-0	KOR16/08SCF	6BC6-IIY	PRN800SE-280-40
036-54685-0	KOR16/08SMS	6BC6-M	PRN800SE-280-40
036-63020-0	KOR16/08SOMD71	6BC6-NNR	PRN800SE-90-45
036-63655-0	KOR16/08SOMDCF	6BF4422	PRN800SE-90-45
036-63678-0	KOR16/10S71	6BF6-316	PRN800S-PS
036-63682-0	KOR16/10SCF	6BF6622	PRN800S-PS
036-63683-0	KOR16/10SMS	6BF6-6MO	PRNA10D-90-45
036-63684-0	KOR16/10SOMD71	6BF6-825	PRNA10D-90-45
036-63699-0	KOR16/10SOMDCF	6BF6-B	PRNA10S-180-90
036-63706-0	KOR16/12S71	6BF6-M	PRNA10S-180-90
036-63713-0	KOR16/12SCF	6BF6-T	PRNA10S-180-90S
036-63714-0	KOR16/12SMS	6BFGL/LK35CF-OR	PRNA10S-180-90S
036-63723-0	KOR16/12SOMD71	6BLEN6-316	PRNA10S-90-90
036-63724-0	KOR16/12SOMDCF	6BLEN6-6MO	PRNA10S-90-90
036-63725-0	KOR16/14S71	6BLEN6-B	PRNA10S-90-90S
036-63729-0	KOR16/14SCF	6BLEN6-IIY	PRNA10S-90-90S
036-63730-0	KOR16/14SOMDCF	6BLEN6-IIY-NC	PRNA1S-180-90
036-63733-0	KOR16S/15LCF	6BLEN6-M	PRNA1S-180-90
036-63764-0	KOR16S/15LOMDCF	6BLP6-316	PRNA1S-180-90S
036-63765-0	KOR18/06L71	6BLP6-625	PRNA1S-180-90S
036-63773-0	KOR18/06LCF	6BLP6-6MO	PRNA1S-90-90
036-63777-0	KOR18/06LOMD71	6BLP6-825	PRNA1S-90-90
036-63798-0	KOR18/06LOMDCF	6BLP6-B	PRNA1S-90-90S

036-63811-0	KOR18/08L71	6BLP6-M	PRNA1S-90-90S
036-63829-0	KOR18/08LCF	6BMLS	PRNA20D-90-45
036-63833-0	KOR18/08LOMD71	6BMLSBP	PRNA20D-90-45
036-63834-0	KOR18/08LOMDCF	6BMLSBPBLKOEL	PRNA20S-180-90
036-63847-0	KOR18/08LSPSR18CF	6BMLSS	PRNA20S-180-90
036-63852-0	KOR18/10+GR22OFF71	6BMTXS	PRNA20S-180-90S
036-63886-0	KOR18/10L71	6BMTXSBP	PRNA20S-180-90S
036-63896-0	KOR18/10LCF	6BMTXSS	PRNA20S-90-135
036-63921-0	KOR18/10LDPR71CF	6C1022S	PRNA20S-90-135
036-64645-0	KOR18/10LMS	6C1227S	PRNA20S-90-90
036-64752-0	KOR18/10LOFF71	6C1633S	PRNA20S-90-90
036-64827-0	KOR18/10LOMD71	6C2042S	PRNA20S-90-90S
036-80016-0	KOR18/10LOMDCF	6C3MXS	PRNA20S-90-90S
036-80017-0	KOR18/10LOMDMS	6C3MXSS	PRNA20S-PS
036-80018-0	KOR18/10LSPSR18CF	6C3P4S	PRNA20S-PS
036-80029-0	KOR18/12L71	6C3T4S	PRNA3D-90-45
036-80036-0	KOR18/12LCF	6C4OMLOS	PRNA3D-90-45
036-80084-0	KOR18/12LMS	6C4OMLOSEPDM	PRNA3S-180-45
036-80085-0	KOR18/12LOMD71	6C4OMLOSS	PRNA3S-180-45
036-80086-0	KOR18/12LOMDCF	6C4OMLOSV	PRNA3S-180-90
036-80087-0	KOR18/15L71	6C4OMXS	PRNA3S-180-90
036-80088-0	KOR18/15LCF	6C4OMXSBP	PRNA3S-270-45
036-80089-0	KOR18/15LDPR71CF	6C4OMXSS	PRNA3S-270-45
036-80090-0	KOR18/15LMS	6C4OMXSV	PRNA3S-90-90
036-80091-0	KOR18/15LOMD71	6C5OMLOS	PRNA3S-90-90
036-80095-0	KOR18/15LOMDCF	6C5OMLOSS	PRNA3S-90-90S
036-80115-0	KOR18L/16SCF	6C5OMXS	PRNA3S-90-90S
036-80117-0	KOR18L/16SOMDCF	6C5OMXSBP	PRO20-K
036-80119-0	KOR20/06SCF	6C5OMXSS	PRO20-K
036-80122-0	KOR20/06SOMD71	6C616S	PRO30DE-0-45
036-80123-0	KOR20/06SOMDCF	6C616S65	PRO30DE-0-45
036-80124-0	KOR20/08S71	6C6MK4S	PRO30-K
036-80136-0	KOR20/08SCF	6C6MK4SS	PRO30-K
036-80150-0	KOR20/08SMS	6C6MLOS	PRO30SE-0-45
036-80160-0	KOR20/08SOMD71	6C6MLOSEPDM	PRO30SE-0-45
036-80162-0	KOR20/08SOMDCF	6C6MLOSS	PRO3-K
036-80173-0	KOR20/10S71	6C6MLS	PRO3-K
036-80176-0	KOR20/10SCF	6C6MXS	PROA10D-0-45
036-80178-0	KOR20/10SMS	6C6MXSBP	PROA10D-0-45
036-80179-0	KOR20/10SOMD71	6C6MXSS	PROA10S-0-90
036-80180-0	KOR20/10SOMDCF	6C818S	PROA10S-0-90
036-80181-0	KOR20/12S71	6C95X-16-8C	PROA20D-0-45
036-80190-0	KOR20/12SCF	6C95X-25-12C	PROA20D-0-45
036-80192-0	KOR20/12SOMD71	6CMTXS	PROA20S-0-90
036-80193-0	KOR20/12SOMDCF	6CMTXSS	PROA20S-0-90
036-80195-0	KOR20/14S71	6CNMLS	PROA3S-0-90
036-80196-0	KOR20/14SCF	6COL-BLU	PROA3S-0-90
036-80199-0	KOR20/16S71	6COL-RED	PRP-95-073
036-80200-0	KOR20/16SCF	6DB15M4M4	PRP-95-073
036-80201-0	KOR20/16SMS	6DB15M6M4	PRP-95-960
036-80202-0	KOR20/16SOMD71	6DB15M9M4	PRP-95-960
036-80203-0	KOR20/16SOMDCF	6DB15P6P4	PRPM2AA10JV
036-80207-0	KOR20S/15LCF	6E6MK4S	PRPM2AA10KV

036-80208-0	KOR20S/15LOMDCF	6ECR6-316	PRPM2AA20JV
036-80209-0	KOR20S/18LCF	6ECR6-6MO	PRPM2AA20KV
036-80219-0	KOR20S/18LOMDCF	6ECR6-825	PRPM2AA35JV
036-80257-0	KOR22/06LCF	6ECR6-B	PRPM2BB10KV
036-80265-0	KOR22/08L71	6ECR6-IIY	PRPM2BB20JV
036-80273-0	KOR22/08LCF	6ECR6-NNR	PRPM2BB20KV
036-80276-0	KOR22/08LOMDCF	6ECR6-TTZ	PRPM2PP02JV
036-80280-0	KOR22/10L71	6EE6-316	PRPM2PP10JV
036-80281-0	KOR22/10LCF	6EE6-6MO	PRPM2PP10KV
036-80313-0	KOR22/10LMS	6EE6-B	PRPM2PP20JV
036-80314-0	KOR22/10LOMD71	6EE6-IIY	PRPM2PP20KV
036-80349-0	KOR22/10LOMDCF	6EE6-M	PRPM2PP35JV
036-80352-0	KOR22/12L71	6EE6-NNR	PRPM2PP35KV
036-80409-0	KOR22/12LCF	6EE6-TTZ	PRPM3AA20KV
036-80410-0	KOR22/12LOMD71	6EMK4S	PRPM3AA35JV
036-80430-0	KOR22/12LOMDCF	6EMK4SS	PRPM3AA35KV
036-80481-0	KOR22/12LSPSR22CF	6EMLOSS	PRPM3BB20KV
036-80487-0	KOR22/15L71	6EMTXS	PRPM3PP10JV
036-80489-0	KOR22/15LCF	6EMTXSS	PRPM3PP10KV
036-80490-0	KOR22/15LMS	6ET6-316	PRPM3PP20JV
036-80491-0	KOR22/15LOMD71	6ET6-6MO	PRPM3PP20KV
036-80515-0	KOR22/15LOMDCF	6ET6-6MO-NC	PRPM3PP35KV
036-80516-0	KOR22/15LOMDCFVOL	6ET6-825	PRR2506S-028B-S-R03P
036-80517-0	KOR22/15LOMDMS	6ET6-B	PRR2506S-028P-S-R03P
036-80518-0	KOR22/15LSPSR22CF	6ET6-IIY	PRR2506S-054P-S-R05P
036-80520-0	KOR22/18L71	6ET6-IIY-NC	PRR2506S-105P-S-R05P
036-80523-0	KOR22/18LCF	6ET6-M	PRR2506S-259B-S-S03P
036-80532-0	KOR22/18LDPR71CF	6ET6-NNR	PRR2508S-156P-S-R03P
036-80534-0	KOR22/18LMS	6ET6-TTZ	PRR2508S-156P-S-R05P
036-80542-0	KOR22/18LOMD71	6F12983	PRR2508S-648B-S-S05P
036-80550-0	KOR22/18LOMDCF	6F161686	PRR2510-105
036-80554-0	KOR22L/16SCF	6F2042S	PRR2510S-054B-S-R03F
036-80559-0	KOR22L/20SCF	6F2412	PRR2510S-079B-S-R03P
036-80561-0	KOR22L/20SOMDCF	6F2583	PRR2510S-105B-S-R03F
036-80590-0	KOR25/06SCF	6F2612	PRR2510S-105B-S-S03F
036-80601-0	KOR25/06SOMD71	6F2683	PRS2510-105B
036-80608-0	KOR25/06SOMDCF	6F2983	PRS4-1/2
036-80623-0	KOR25/08S71	6F3MK4S	PRS4-1/4
036-80702-0	KOR25/08SCF	6F3MK4SS	PRS4-1/8
036-80752-0	KOR25/08SOMD71	6F3MP4SS	PRS4-3/8
036-80754-0	KOR25/08SOMDCF	6F3MXB	PRS-A121B
036-80755-0	KOR25/10S71	6F3MXS	PRS-A121B
036-80765-0	KOR25/10SCF	6F3MXSS	PRS-A121F
036-80776-0	KOR25/10SOMD71	6F3P4S	PRS-A121F
036-80781-0	KOR25/10SOMDCF	6F3T4S	PRS-A121M
036-80783-0	KOR25/12S71	6F42EDMLOS	PRS-A121M
036-80871-0	KOR25/12SCF	6F42EDMLOSS	PRS-A122B
036-80872-0	KOR25/12SOMD71	6F42EDMLOSV	PRS-A122B
036-80873-0	KOR25/12SOMDCF	6F42EDMXS	PRS-D10
036-80874-0	KOR25/14SCF	6F42EDMXSS	PRS-D10
036-80875-0	KOR25/16S71	6F42EDMXSV	PRT-A10
036-81016-0	KOR25/16SCF	6F4422	PRT-A10
036-81024-0	KOR25/16SOMD71	6F4423	PRT-A10-EX

036-81029-0	KOR25/16SOMDCF	6F4426	PRT-A10-EX
036-81030-0	KOR25/20S71	6F4622	PRT-A12
036-81032-0	KOR25/20SCF	6F4623	PRT-A12
036-81034-0	KOR25/20SMS	6F4626	PRT-B10
036-81063-0	KOR25/20SOMD71	6F4923	PRT-B10
036-81079-0	KOR25/20SOMDCF	6F4926	PRT-B10-EX
036-81096-0	KOR25S/18LCF	6F4OMXS	PRT-B10-EX
036-81097-0	KOR25S/22LCF	6F4OMXSS	PRT-C10
036-81098-0	KOR25S/22LOMDCF	6F4OMXSV	PRT-C10
036-81218-0	KOR28/06LCF	6F5OMLO300701S	PRT-C10-EX
036-81220-0	KOR28/06LOMDCF	6F5OMLOS	PRT-C10-EX
036-81221-0	KOR28/08L71	6F5OMLOSBP	PRT-C12
036-81227-0	KOR28/08LCF	6F5OMLOSBPNB	PRT-C12
036-81228-0	KOR28/08LOMDCF	6F5OMLOSS	PRT-D10
036-81231-0	KOR28/10L71	6F5OMXS	PRT-D10
036-81232-0	KOR28/10LCF	6F5OMXSBP	PRT-E10
036-81233-0	KOR28/10LDPR71CF	6F5OMXSS	PRT-E10
036-81255-0	KOR28/10LMS	6F5OMXSV	PRT-E12
036-81256-0	KOR28/10LOMD71	6F61226	PRT-E12
036-81262-0	KOR28/10LOMDCF	6F61626	PRT-F10
036-81279-0	KOR28/12L71	6F616S	PRT-F10
036-81280-0	KOR28/12LCF	6F6281	PS011
036-81309-0	KOR28/12LMS	6F63MXS	PS10021-611A
036-81310-0	KOR28/12LOMD71	6F63P4S	PS10021-611A
036-81311-0	KOR28/12LOMDCF	6F6423	PS10021-611A
036-81312-0	KOR28/15L71	6F6426	PS10021-611A
036-81324-0	KOR28/15LCF	6F642EDMLS	PS10021-631A
036-81339-0	KOR28/15LMS	6F642EDMLSS	PS10021-631A
036-81399-0	KOR28/15LOMD71	6F642EDMXS	PS10021-641A
036-81403-0	KOR28/15LOMDCF	6F642EDMXSE0540	PS10021-641A
036-81404-0	KOR28/18L71	6F642EDMXSS	PS10023-611A-01
036-81405-0	KOR28/18LCF	6F64OMXS	PS10023-611A-01
036-81406-0	KOR28/18LMS	6F64OMXSS	PS10023-631A-01
036-81543-0	KOR28/18LOMD71	6F64OMXSV	PS10023-631A-01
036-81544-0	KOR28/18LOMDCF	6F65OMXS	PS10023-631A-01
036-81727-0	KOR28/18LOMDMS	6F65OMXSV	PS10023-631A-01
036-81729-0	KOR28/22L71	6F6622	PS10023-641A-01
036-81904-0	KOR28/22LCF	6F6623	PS10023-641A-01
036-81905-0	KOR28/22LDPR71CF	6F6626	PS10531-A-01
036-82745-0	KOR28/22LDPR71MS	6F6682	PS10531-A-01
036-82860-0	KOR28/22LMS	6F6923	PS10531-A-02
036-84146-0	KOR28/22LOMD71	6F6926	PS10531-A-02
036-84287-0	KOR28/22LOMDCF	6F6MXSS	PS11001-610A
036-84288-0	KOR28L/16SCF	6F818S	PS11001-610A
036-84310-0	KOR28L/25SCF	6F8983-SOG	PS11048-610A-00
036-84311-0	KOR30/06SCF	6FA2N-316	PS11048-610A-00
036-84340-0	KOR30/08S71	6FA4K-316	PS11048-610A-01
036-84354-0	KOR30/08SCF	6FA4N-316	PS11048-610A-01
036-84403-0	KOR30/08SOMDCF	6FA4N-625	PS11048-630A-00
036-84404-0	KOR30/10S71	6FA4N-825	PS11048-630A-00
036-84444-0	KOR30/10SCF	6FA4N-HC	PS11048-670A-00
036-84445-0	KOR30/10SMS	6FA4R-316	PS11048-670A-00
036-84446-0	KOR30/10SOMDCF	6FA4R-825	PS11048-670A-01

036-84447-0	KOR30/12S71	6FA6GC-316	PS11048-670A-01
036-84448-0	KOR30/12SCF	6FA6K-316	PS11048-670A-01
036-84450-0	KOR30/12SOMD71	6FA6N-316	PS11048-670A-01
036-84455-0	KOR30/12SOMDCF	6FA6R-316	PS11112-A-01
036-84462-0	KOR30/14SCF	6FA8N-316	PS11112-A-01
036-84470-0	KOR30/16S71	6FA8N-625	PS11112-A-04
036-84477-0	KOR30/16SCF	6FA8N-825	PS11112-A-04
036-84478-0	KOR30/16SMS	6F-B8LJ2-BN-SSP	PS11160-A
036-84479-0	KOR30/16SOMDCF	6F-B8LJ2-BP	PS11160-A
036-84485-0	KOR30/20S71	6F-B8LJ2-BP-C3	PS11400-200-A
036-84486-0	KOR30/20SCF	6F-B8LJ2-SSP	PS11400-200-A
036-84572-0	KOR30/20SMS	6F-B8LJ2-V-SSP	PS115-005-S2/MU115-010
036-84580-0	KOR30/20SOMD71	6F-B8LJ-BP	PS115-005-S2/MU115-026
036-84609-0	KOR30/20SOMDCF	6F-B8LJ-SSP	PS115-005-S2/MU115-039
036-84770-0	KOR30/25S71	6F-B8LJ-V-BP	PS115-007-S2/MU115-026
036-84772-0	KOR30/25SCF	6F-B8XJ2-BN-SSP	PS115-010-L2/MU115-089
036-84773-0	KOR30/25SMS	6F-B8XJ2-BP	PS115-010-S2/MU115-005
036-84775-0	KOR30/25SOMD71	6F-B8XJ2-BP-C3	PS115-010-S2/MU115-010
036-84775-0+B	KOR30/25SOMDCF	6F-B8XJ2-SSP	PS115-010-S2/MU115-026
036-84857-0	KOR30S/28LCF	6F-B8XJ2-SSP-C3	PS115-010-S2/MU115-027
036-84858-0	KOR30S/28LOMDCF	6F-B8XJ-BN-SSP	PS115-010-S2/MU115-039
036-84894-0	KOR35/06LCF	6F-B8XJ-SSP	PS115-010-S2/MU115-089
036-84899-0	KOR35/06LOMDCF	6F-B8XJ-V-SSP	PS115-020-50043/MU115-010
036-84900-0	KOR35/08LCF	6FBC4N-316	PS115-020-S2/MU115-089
036-84901-0	KOR35/10LCF	6FBC4N-B	PS115-040-S2/MU115-089
036-84902-0	KOR35/10LOMDCF	6FBC4N-NNR	PS115-050-L2/MU115-006
036-84909-0	KOR35/12L71	6FBC6N-316	PS11516-A
036-84910-0	KOR35/12LCF	6FBC8N-316	PS11516-A
036-84911-0	KOR35/12LOMD71	6FBT4N-316	PS11702-A-01
036-84933-0	KOR35/12LOMDCF	6FBT4N-B	PS11702-A-01
036-84946-0	KOR35/15L71	6FBT4N-NNR	PS11702-A-02
036-84947-0	KOR35/15LCF	6FBT6N-316	PS11702-A-02
036-84948-0	KOR35/15LOMD71	6FBT8N-316	PS11703-A
036-84949-0	KOR35/15LOMDCF	6F-C6L-1/3-B	PS11703-A
036-84950-0	KOR35/18L71	6F-C6L-1/3-BN-B	PS120000-002-000
036-84951-0	KOR35/18LCF	6F-C6L-1/3-SS	PS120000-002-000
036-84952-0	KOR35/18LDPR71CF	6F-C6L-100-B	PS120000-002-000
036-84953-0	KOR35/18LOMD71	6F-C6L-100-SS	PS120000-002-000
036-84960-0	KOR35/18LOMDCF	6F-C6L-10-B	PS120000-020-000
036-85514-0	KOR35/22L71	6F-C6L-10-BN-B	PS120000-020-000
036-85705-0	KOR35/22LCF	6F-C6L-10-SS	PS120000-080-000
036-85825-0	KOR35/22LDPR71CF	6F-C6L-1-B	PS120000-080-000
036-85874-0	KOR35/22LMS	6F-C6L-1-B-C3	PS120000-080-000
036-85888-0	KOR35/22LOMD71	6F-C6L-1-BN-B	PS120000-080-000
036-85893-0	KOR35/22LOMDCF	6F-C6L-1-BN-SS	PS120000-080-015
036-85904-0	KOR35/28L71	6F-C6L-1-EPR-SS	PS120000-080-015
036-85925-0	KOR35/28LCF	6F-C6L-1-SS	PS120000-080-025
036-85931-0	KOR35/28LDPR71CF	6F-C6L-25-BN-B	PS120000-080-025
036-86030-0	KOR35/28LMS	6F-C6L-25-BN-SS	PS120001-002-000
036-86050-0	KOR35/28LOMD71	6F-C6L-25-SS	PS120001-002-000
036-86051-0	KOR35/28LOMDCF	6F-C6L-50-EPR-SS	PS120001-020-000
036-86054-0	KOR38/06SCF	6F-C6L-50-SS	PS120001-020-000
036-86073-0	KOR38/08SCF	6F-C6L-5-B	PS120001-050-000

036-86074-0	KOR38/10S71	6F-C6L-5-BN-B	PS120001-050-000
036-86182-0	KOR38/10SCF	6F-C6L-5-BN-SS	PS120001-050-000
036-86293-0	KOR38/12SCF	6F-C6L-5-EPR-B	PS120001-050-000
036-86305-0	KOR38/12SOMD71	6F-C6L-5-EPR-SS	PS120001-080-000
036-86306-0	KOR38/12SOMDCF	6F-C6L-5-SS	PS120001-080-000
036-86307-0	KOR38/14SCF	6F-C6L-75-B	PS120001-080-015
036-86309-0	KOR38/16S71	6F-C6L-75-EPR-SS	PS120001-080-015
036-86310-0	KOR38/16SCF	6F-C6L-75-SS	PS120001-080-025
036-86312-0	KOR38/16SOMDCF	6F-CO6L-1/3-KZ-SS	PS120001-080-025
036-86313-0	KOR38/20S71	6F-CO6L-1-BN-SS	PS120002-002-025
036-86318-0	KOR38/20SCF	6F-CO6L-1-KZ-SS	PS120002-002-025
036-86319-0	KOR38/20SOMD71	6F-CO6L-1-V-SS	PS120004-080-000
036-86323-0	KOR38/20SOMDCF	6F-CO6L-50-BN-SS	PS120004-080-000
036-86324-0	KOR38/25S71	6F-CO6L-5-KZ-SS	PS120006-080-000
036-86325-0	KOR38/25SCF	6F-CO6L-5-V-SS	PS120006-080-000
036-86328-0	KOR38/25SDPR71MS	6FEL2N-316	PS120006-080-035
036-86329-0	KOR38/25SOMD71	6FEL4N-316	PS120006-080-035
036-86330-0	KOR38/25SOMDCF	6FEL4N-6MO	PS120100-060-000
036-86331-0	KOR38/30S71	6FEL4N-B	PS120100-060-000
036-86332-0	KOR38/30SCF	6FEL4N-NNR	PS120100-100-000
036-86333-0	KOR38/30SOMD71	6FEL6N-316	PS120100-100-000
036-86334-0	KOR38/30SOMDCF	6FEL6N-6MO	PS120100-100-013
036-86335-0	KOR42/10LCF	6FEL6N-B	PS120100-100-013
036-86336-0	KOR42/10LDPR71CF	6FEL6N-M	PS120100-110-S01
036-86337-0	KOR42/12L71	6FEL6N-NNR	PS120100-110-S01
036-86338-0	KOR42/12LCF	6FEL8N-316	PS120100-A50-023
036-86340-0	KOR42/12LOMD71	6FEL8N-825	PS120100-A50-023
036-86341-0	KOR42/12LOMDCF	6FEL8N-M	PS120101-100-000
036-86343-0	KOR42/15LCF	6FF6-316	PS120101-100-000
036-86344-0	KOR42/15LMS	6FF6-625	PS120101-100-003
036-86347-0	KOR42/15LOMD71	6FF6-6MO	PS120101-100-003
036-86361-0	KOR42/15LOMDCF	6FF6-B	PS120101-100-013
036-86375-0	KOR42/18L71	6FF6-HC	PS120101-100-013
036-86385-0	KOR42/18LCF	6F-F6L-100-B	PS120200-080-000
036-86448-0	KOR42/18LOMD71	6F-F6L-100-BN-B	PS120200-080-000
036-86449-0	KOR42/18LOMDCF	6F-F6L-100-BN-SS	PS120200-080-015
036-86450-0	KOR42/22L71	6F-F6L-100-SS	PS120200-080-015
036-86467-0	KOR42/22LCF	6F-F6L-10-B	PS12315-A
036-86480-0	KOR42/22LOMD71	6F-F6L-10-SS	PS12315-A
036-86526-0	KOR42/22LOMDCF	6F-F6L-1-B	PS12315-A
036-86527-0	KOR42/28L71	6F-F6L-250-B	PS12315-A
036-86563-0	KOR42/28LCF	6F-F6L-50-B	PS12316-A
036-86564-0	KOR42/28LMS	6F-F6L-50-EPR-B	PS12316-A
036-86571-0	KOR42/28LOMD71	6F-F6L-50-SS	PS12317-A
036-86610-0	KOR42/28LOMDCF	6F-F6L-5-B	PS12317-A
036-86642-0	KOR42/35L71	6F-F6L-5-SS	PS12368-A
036-86661-0	KOR42/35LCF	6FF6-M	PS12368-A
036-86664-0	KOR42/35LDPR71CF	6FF6-T	PS12407-A
036-86683-0	KOR42/35LOMD71	6FF6-TI	PS12407-A
036-86684-0	KOR42/35LOMDCF	6F-LC12L-SS	PS12486-A-01
036-86685-0	KOR42L/20SCF	6FMK4S	PS12486-A-01
036-86685-021	KOR42L/25SCF	6FMK4SS	PS13019-A
036-86687-0	KOR42L/30SCF	6F-MPNLB-T-SS	PS13019-A

036-86687-020	KR 27004-H	6FMTXB	PS13105-616A
036-86688-0	KR22/12/22/12LCFX	6FMTXS	PS13105-616A
036-86690-0	KR42/35/35/22LCFX	6FMTXSS	PS13105-616A
036-86691-0	KR8EX-11-012	6FNMK4S	PS13105-616A
036-86692-0	KR8EX-11-012N	6FNMK4SS	PS13109-616A
036-86693-0	KS025HM001	6FNMKAS	PS13109-616A
036-86695-0	KS040HM001	6FNMLS	PS13110-616A
036-86696-0	KS050HM001	6FNMLSS	PS13110-616A
036-86697-0	KS063HM001	6FNMTXS	PS13117-616A
036-86698-0	KS08	6FNMTXSS	PS13117-616A
036-86714-0	KS080HM001	6FRT4N-316	PS13118-616A
036-86724-0	KS10	6FRT4N-6MO	PS13118-616A
036-86725-0	KS100HM001	6FRT4N-B	PS13118-616A
036-86735-0	KS103L01	6FRT6N-316	PS13118-616A
036-86740-0	KS25VH001	6FSC12N-316	PS13850-616A-00
036-86749-0	KS31/4	6FSC2N-316	PS13850-616A-00
036-86751-0	KS32VH001	6FSC4GC-316	PS13850-646A-00
036-86752-0	KS40VH001	6FSC4K-316	PS13850-646A-00
036-86754-0	K-SCE-020-02	6FSC4N-316	PS13850-676A-00
036-86757-0	K-SCFT-015-02-02	6FSC4N-6MO	PS13850-676A-00
036-86759-0	K-SCFT-015-02-02-ST	6FSC4N-825	PS13854-616A-00
036-86760-0	K-SCFT-060-02-02	6FSC4N-B	PS13854-616A-00
036-86768-0	K-SCFT-060-02-02-ST	6FSC4N-IIY	PS13856-616A-00
036-86770-0	K-SCFT-060-C2-05	6FSC4N-M	PS13856-616A-00
036-86772-0	K-SCFT-150-02-02	6FSC4N-NNR	PS13950-616A-00
036-86774-0	K-SCFT-150-02-02-ST	6FSC6GC-316	PS13950-616A-00
036-86775-0	K-SCFT-150-C2-05	6FSC6K-316	PS13950-636A-00
036-86782-0	K-SCFT-300-02-02	6FSC6N-316	PS13950-636A-00
036-86783-0	K-SCFT-300-02-02-ST	6FSC6N-6MO	PS13950-656A-00
036-86825-0	K-SCFT-300-C2-05	6FSC6N-825	PS13950-656A-00
036-86864-0	K-SCFT-600-02-02	6FSC6N-B	PS13950-676A-00
036-86871-0	K-SCFT-600-02-02-ST	6FSC6N-IIY	PS13950-676A-00
036-86876-0	K-SCFT-750-02-02	6FSC6N-M	PS13951-656A-00
036-86878-0	K-SCJN-016-01	6FSC8GC-316	PS13951-656A-00
036-86882-0	K-SCJN-016-01-ST	6FSC8K-316	PS13954-616A-00
037-000202	K-SCJN-1000-01	6FSC8N-316	PS13954-616A-00
037-71446-0	K-SCJN-100-01	6FSC8N-6MO	PS13954-646A-00
039-0125-062-72	K-SCJN-100-01-ST	6FSC8N-825	PS13954-646A-00
039-54039-0	K-SCJN-400-01	6FSC8N-B	PS13954-676A-00
039-54043-0	K-SCJN-400-01-ST	6FSC8N-IIY	PS13954-676A-00
039-54048-0	K-SCJN-600-01	6FSC8N-M	PS13955-616A-00
039-54083-0	K-SCJN-600-01-ST	6FSC8N-NNR	PS13955-616A-00
039-54084-0	K-SCJN-KIT-016	6FSC8N-TTZ	PS13955-656A-00
039-54128-0	K-SCJN-KIT-100	6FSC8R-316	PS13955-656A-00
039-54129-0	K-SCJN-KIT-400	6F-SWB8L-RT-V-SS	PS13956-616A-00
039-54133-0	K-SCJN-KIT-600	6F-V8AN-B	PS13956-616A-00
039-91355-0	K-SCJNP-016-01-RC	6F-V8AR-SS	PS13957-616A-00
03E-93950-0	K-SCJR-1500-01-US-ST	6F-V8AR-V-SS	PS13957-616A-00
03E-94057-0	K-SCKIT-152-0-600	6F-V8LK-B	PS13980-616A-00
03E-95163-0	K-SCKIT-152-2-400-VEST	6F-V8LK-B-C3	PS13980-616A-00
03XEA14EGCBNNN	K-SCKIT-155-0-00	6F-V8LN-B	PS13980-646A-00
03XEA14EGCBNNN	K-SCKIT-155-0-PQ	6F-V8LN-B-C3	PS13980-646A-00
03XRA14BNNN	K-SCKIT-155-0-PQ-01	6F-V8LN-SS	PS13980-656A-00

03XRA14BNNN	K-SCKIT-330-00	6F-V8LR-B	PS13980-656A-00
0400 04 10	K-SCKIT-340-00	6F-V8LR-SS	PS13982-616A-00
0400 07 13	K-SCKIT-340-PTQ	6G3P4S	PS13982-616A-00
0400 07 13 32	K-SCKIT-500-01-00	6G4MK4S	PS173P
0400 10 17	K-SCKIT-500-01-01	6G4MK4SS	PS173P
0400 13 21	K-SCLV-PTQ-300	6G4MLOSMO	PS180-005-SH/MT180-004
0400 13 21 32	K-SCLV-PTQ-300-C2-05	6G4MLOSMOV	PS180-020-010SH/MT180-027
0400 18 27	K-SCLV-PTQ-600	6G4MXS	PS180-040-SH/MT180-140
0401 04 10	K-SCLV-PTQ-750	6G4MXSMO	PS1-E/1287115
0401 05 10	K-SCLV-PTQ-750-C2-05	6G4MXSS	PS1-E/1287115
0401 07 13	K-SCM-152-0-02-ST	6G4MXSSMO	PS1-E/1438522
0401 10 17	K-SCM-152-2-02-ST	6G63P4S	PS1-E/1438522
0401 13 21	K-SCM-155-0-02	6GMTXS	PS1-E/1509607
0401 18 27	K-SCM-330-2-02	6GMTXSS	PS1-E/1509607
0401 23 34	K-SCM-340-2-02	6H6MK4S	PS1-E/1509616
0401 32 42	K-SCM-500-01-00	6H6MK4SS	PS1-E/1509616
0402 04 10	K-SCM-500-01-01	6HMK4S	PS1-E101
0402 07 10	K-SCM-500-01-01-ST	6HMK4SS	PS1-E101
0402 07 13	K-SCP01-100-34-07	6HMLOS	PS1-E1018
0402 07 13 22	K-SCP01-250-34-06	6HMLOSS	PS1-E1018
0402 07 13 27	K-SCP01-400-34-07	6HMLOSV	PS1-E102
0402 07 13 32	K-SCP-015-74-02	6HMTXB	PS1-E102
0402 10 17	K-SCP01-600-14-07	6HMTXS	PS1-E1028
0402 10 17 22	K-SCP-016-C4-05	6HMTXSS	PS1-E1028
0402 10 17 30	K-SCP-160-C4-05	6HMX6SS	PS1-E1038
0402 13 21	K-SCP-400-C4-05	6HP46S	PS1-E1038
0402 13 21 22	K-SCP-600-74-02	6HP4S	PS1-E111
0402 13 21 30	K-SCP-600-C4-05	6ICP606S3M	PS1-E111
0402 20 27	K-SCPSD-016-04-17	6J6MK4S	PS1-E115
0402 20 27 22	K-SCPSD-250-14-17	6J6MK4SS	PS1-E115
0402 20 27 27	K-SCPSD-400-14-15	6JMK4S	PS1-E116
0402 20 27 30	K-SCPSD-400-14-17	6JMLOS	PS1-E116
0402 20 27 32	K-SCPT-015-02-02	6JMLOSEPDM	PS1-E121
0402 23 34	K-SCPT-015-02-02-ST	6JMLOSS	PS1-E121
0402 23 34 22	K-SCPT-016-C2-05	6JMLOSSV	PS1-E125
0402 32 42	K-SCPT-016-C2-05-ST	6JMLOSV	PS1-E125
0402 32 42 22	K-SCPT-060-02-02	6JMTXS	PS1-E126
0402 32 49	K-SCPT-060-C2-05	6JMTXSS	PS1-E126
0402 40 48	K-SCPT-1000-02-02	6K2	PS1-E1511F
0402 40 49	K-SCPT-1000-C2-05	6K4	PS1-E1511F
04056-I	K-SCPT-150-02-02	6K4-NK	PS1-E1511M
0411 04 06	K-SCPT-150-02-02-PQC	6K6	PS1-E1511M
0411 06 08	K-SCPT-150-02-02-ST	6K-6 RA-SS	PS1-E1620B
0411 07 10	K-SCPT-160-C2-05	6K8	PS1-E1620B
0411 07 10 50	K-SCPT-400-02-02	6K8-NK	PS1-E181
0411 10 12	K-SCPT-400-02-02-ST	6L5NMLS	PS1-E181
0414 04 06	K-SCPT-400-02-02-VEST	6LOHMX6SS	PS1-E185
0414 06 08	K-SCPT-400-C2-05	6M1212E8	PS1-E185
0414 07 10	K-SCPT-600-02-02	6M1216K8	PS1-E186
0414 10 12	K-SCPT-600-02-02-PQC	6M122E8	PS1-E186
0432 04 10	K-SCPT-600-02-02-ST	6M124E2	PS1-E191
0432 07 13	K-SCPT-600-C2-05	6M126E2	PS1-E191
0432 10 17	K-SCQ-060-0-02	6M126E8	PS1-E195

0432 13 21	K-SCQ-060-10-07	6M129N3-SOG	PS1-E195
0432 20 27	K-SCQ-150-0-02	6M12C87OMLOS	PS1-E196
0432 23 34	K-SCQ-150-10-07	6M12C87OMXS	PS1-E196
0436 10 17	K-SCRPM-220	6M12F82EDMLOS	PS1-E21101B
0436 13 21	K-SCRPM-220-ST	6M12F82EDMXS	PS1-E21101B
0436 18 27	K-SCT-150-0-02	6M12F82EDMXSS	PS1-E21101E
0436 23 34	K-SCT-150-04-02	6M12F87OMLOS	PS1-E21101E
0437 07 13	K-SCT-150-04-02-ST	6M12F87OMXS	PS1-E21101F
0437 10 17	K-SCVF-002-10-07	6M12F8OMXS	PS1-E21101F
0437 13 21	K-SCVF-004-10-07	6M14C87OMLOS	PS1-E21101M
0437 18 27	K-SCVF-015-00-02	6M14C87OMLOS V0894	PS1-E21101M
0437 23 34	K-SCVF-015-10-07	6M14C87OMXS	PS1-E21102B
0438 09 17	K-SCVF-040-10-07	6M14C87OMXSBP	PS1-E21102B
0438 12 21	K-SCVF-060-00-02	6M14C87OMXSBPNB	PS1-E21102BV
0438 18 27	K-SCVF-080-10-07	6M14C87OMXSS	PS1-E21102BV
0438 23 34	K-SCVF-150-00-02	6M14C87OMXSV	PS1-E21102E
0439 04 10	K-SCVF-150-10-07	6M14C8OMLOS	PS1-E21102E
0439 07 13	K-SCVF-300-00-02	6M14C8OMXS	PS1-E21102J
0439 10 17	K-SCVF-300-10-07	6M14C8OMXSBP	PS1-E21102J
0439 13 21	KSWA3N	6M14C8OMXSEPDM	PS1-E21152B
0439 18 27	KT0100	6M14F682EDMLS	PS1-E21152B
0439 23 34	KT0100	6M14F682EDMXS	PS1-E21152BV
0443 00 00 25	KT0100	6M14F682EDMXSS	PS1-E21152BV
0443 00 10 32	KT0100	6M14F687OMLS	PS1-E21162BQ
0443 13 04 38	KT0101	6M14F687OMXS	PS1-E21162BQ
0443 13 04 52	KT0101	6M14F687OMXSS	PS1-E21601B
0443 56 40 42	KT0101	6M14F68OMXS	PS1-E21601B
0446 04 10	KT0101	6M14F82EDMLOS	PS1-E21601BV
0446 07 13	KT0102	6M14F82EDMLOSS	PS1-E21601BV
0446 10 17	KT0102	6M14F82EDMLOSV	PS1-E21601M
0446 13 21	KT0102	6M14F82EDMLS	PS1-E21601M
0448 00 00 02	KT0102	6M14F82EDMXS	PS1-E21602B
0448 00 00 10	KT0103	6M14F82EDMXSS	PS1-E21602B
0448 04 10	KT0103	6M14F87OMLOS	PS1-E21602BV
0448 04 10 30	KT0104	6M14F87OMLOSCAP	PS1-E21602BV
0448 06 13	KT0104	6M14F87OMLOSS	PS1-E21602BVS
0448 06 13 22	KT0104	6M14F87OMXS	PS1-E21602BVS
0448 09 17	KT0104	6M14F87OMXSS	PS1-E21652B
0448 12 21	KT0105	6M14F8OMXS	PS1-E21652B
0448 12 21 20	KT0105	6M14G87MLOS	PS1-E21652BV
0449 07 13	KT0105	6M14R87OMXS	PS1-E21652BV
0449 10 17	KT0105	6M14R8OMXS	PS1-E21652BVQ20
0449 13 21	KT0106	6M14S87OMXS	PS1-E21652BVQ20
0450 05 05	KT0106	6M14TT8MLS	PS1-E22102B
0450 05 24	KT0107	6M14V87OMLOS	PS1-E22102B
0452 04 10	KT0107	6M14V87OMXS	PS1-E22152BV
0452 06 13	KT0107	6M14V8OMLOS	PS1-E22152BV
0452 06 13 22	KT0107	6M14V8OMXS	PS1-E22602BV
045-RAC-351	KT0108	6M1616K8	PS1-E22602BV
0461 06 10	KT0108	6M169N3-SOGWO	PS1-E22652BV
0461 06 13	KT0108	6M16C87OMLOS	PS1-E22652BV
0461 09 17	KT0108	6M16C87OMLOSV	PS1-E28101B
0461 12 21	KT0109	6M16C87OMXS	PS1-E28101B

0461 18 27	KT0109	6M16C87OMXSBP	PS1-E28101M
0462 06 10	KT0109	6M16C87OMXSV	PS1-E28101M
0462 06 13	KT0109	6M16C8OMLOS	PS1-E28102B
0462 09 17	KT0110	6M16C8OMXS	PS1-E28102B
0462 12 21	KT0110	6M16F682EDMLS	PS1-E28102BV
0462 18 27	KT0111	6M16F687OMLS	PS1-E28102BV
0462 23 34	KT0111	6M16F82EDMLOS	PS1-E28152BV
0465 04 13	KT0111	6M16F82EDMLOSV	PS1-E28152BV
0465 07 17	KT0111	6M16F82EDMXS	PS1-E28601BV
0465 10 21	KT0112	6M16F87OMLOS	PS1-E28601BV
0469 04 10	KT0112	6M16F87OMLOSCAP	PS1-E28602B
0469 07 13	KT0112	6M16F87OMLOSS	PS1-E28602B
0469 10 17	KT0112	6M16F87OMLOSV	PS1-E28602BV
0469 13 21	KT0113	6M16F87OMXS	PS1-E28602BV
0469 18 27	KT0113	6M16F8OMXS	PS1-E28652B
0469 23 34	KT0113	6M16R87OMLOS	PS1-E28652B
047000-0200	KT0113	6M16R87OMLOSV	PS1-E28652BV
047007-0054	KT0114	6M16R8OMLOS	PS1-E28652BV
047007-0224	KT0114	6M16S87OMLOS	PS1-E29101M
0471 04 10	KT0115	6M16S87OMLOSV	PS1-E29101M
0471 06 10	KT0115	6M16S8OMLOS	PS1-E29102B
0471 06 13	KT0115	6M16V87OMLOS	PS1-E29102B
0471 09 17	KT0115	6M16V87OMXS	PS1-E29602B
0471 12 21	KT0116	6M16V8OMLOS	PS1-E29602B
0471 18 27	KT0116	6M18C87OMLOS	PS1-E311
0471 23 34	KT0117	6M18C87OMXS	PS1-E311
0472 00 00 10	KT0117	6M18C8OMLOS	PS1-E315
0472 04 10	KT0118	6M18C8OMXS	PS1-E315
0472 06 10	KT0118	6M18F82EDMLOS	PS1-E316
0472 06 13	KT0119	6M18F82EDMLOSCAP	PS1-E316
0472 06 13 22	KT0119	6M18F82EDMXS	PS1-P1071
0472 09 17	KT0120	6M18F87OMLOS	PS1-P1071
0472 12 21	KT0120	6M18F87OMLOSV	PS1-P1081
0472 18 27	KT0121	6M18F87OMXS	PS1-P1081
0472 23 34	KT0121	6M18F8OMXS	PS1-P1091
0473F	KT0122	6M18F8OMXSS	PS1-P1091
0482 04 10	KT0122	6M18V87OMXS	PS1-P1095
0482 04 10 22	KT0123	6M1SC10-316	PS1-P1095
0482 04 10 32	KT0123	6M1SC4-316	PS1-PSP1438564
0482 06 13	KT0124	6M1SC6-316	PS1-PSP1438564
0482 06 13 22	KT0124	6M1SC6-6MO	PS201
0482 09 17	KT0124	6M1SC6-IIY	PS202
0482 12 21	KT0124	6M1SC8-316	PS220-050-***-SD/MT-026
0482 12 21 22	KT0125	6M22F82EDMXS	PS221002
0482 12 21 26	KT0125	6M22F87OMLOS	PS221002
0482 18 27	KT0125	6M22N1	PS221018
0482 23 34	KT0125	6M24C2	PS221018
0483 04 10	KT0126	6M24C3	PS221019
0483 06 13	KT0126	6M24C6	PS221019
0483 06 13 22	KT0126	6M24C6-OP	PS221020
0483 09 17	KT0126	6M24C8	PS221020
0483 12 21	KT0127	6M26C2	PS221022
0483 12 21 30	KT0127	6M26C3	PS221022

0483 18 27	KT0128	6M26C6	PS221023
0483 23 34	KT0128	6M28C8-OP	PS221023
0489 07 13	KT0128	6M29C3	PS221024
0489 10 17	KT0128	6M29C3-OP	PS221024
0489 13 21	KT0129	6M29C6	PS2815P
0489 18 27	KT0129	6M29C6-OP	PS2815P
0489 23 34	KT0129	6M2SC6-316	PS2817P
0490 04 13	KT0129	6M2SC6-6MO	PS2817P
0490 07 17	KT0130	6M2TU6-316	PS2819P
0490 10 21	KT0130	6M2TU6-6MO	PS2819P
0490 13 27	KT0131	6M3SC4-316	PS2828B45P
049059-0137	KT0131	6M3SC6-316	PS2828B45P
049059-0175	KT0131	6M3SC8-316	PS2869P
049059-0200	KT0131	6M412D6	PS2869P
049059-0300	KT0132	6M42C1	PS2916P
049059-0350	KT0132	6M42C8	PS2916P
049059-0400	KT0132	6M42D1	PS2917F
0491 04 13	KT0132	6M42N1	PS2917F
0491 04 13 64	KT0133	6M44B2	PS2919F
0491 07 17	KT0133	6M44B2-SOG	PS2919F
0491 10 21	KT0134	6M44B8	PS2921F
0491 13 27	KT0134	6M44C3	PS2921F
0492 04 13	KT0135	6M44C8	PS294679BP
0492 04 13 64	KT0135	6M44D3	PS294679BP
0492 07 17	KT0136	6M44D6	PS2946J79BP
0492 10 21	KT0136	6M46B2	PS2946J79BP
0492 13 27	KT0137	6M46C8	PS2948F
0494 07 17	KT0137	6M46D2	PS2948F
0496 04 13	KT0138	6M46D3	PS2951F
0496 07 17	KT0138	6M46D6	PS2951F
0496 10 21	KT0139	6M46N3	PS2961F
0496 13 27	KT0139	6M48N8	PS2961F
0497 04 13	KT0140	6M49D3	PS2973F
0497 07 17	KT0140	6M49D6	PS2973F
0497 10 21	KT0144	6M54B2	PS2982B49P
0497 13 27	KT0144	6M56B2	PS2982B49P
0499 13 22	KT0145	6M5BT6-316	PS301BP
04F20C1106AAFPH15	KT0145	6M5RT6-316	PS301BP
04F20C1106AAFPH15	KT0145	6M5SEL6-316	PS321003
04F20C1108AAFPH05	KT0145	6M5VEL6-316	PS321003
04F20C1108AAFPH05	KT0146	6M612D6	PS321006
04F20C1108ACFPH05	KT0146	6M616D6	PS321006
04F20C1108ACFPH05	KT0147	6M616N6	PS341001
04F20C1108ACFSB05	KT0147	6M62C1	PS341001
04F20C1108ACFSB05	KT0148	6M62D1	PS341004
04F20O1106ACF4C15	KT0148	6M62N1	PS341004
04F20O1106ACF4C15	KT0149	6M64B2	PS3441B49P
04F30U3106ADFEC05	KT0149	6M64B8-SOG	PS3441B49P
04F30U3106ADFEC05	KT0149	6M64B9-OP	PS390472
04L00GB1	KT0149	6M64C3	PS390472
04L00GB1	KT0151	6M64C8	PS390914
04L10GB1	KT0151	6M64D2	PS390914
04L10GB1	KT0152	6M64D3	PS393551

050-0000-800-1	KT0152	6M64D3-OP	PS393551
050-0000-801-1	KT0154	6M64D6	PS393556
050-0010-110-1	KT0154	6M64D6-OP	PS393556
050-0010-130-1	KT0155	6M66B2	PS393557
050-0010-GSK-KIT	KT0155	6M66B8-SOG	PS393557
050-0012-110-1	KT0156	6M66C3	PS393582
050-0012-130-1	KT0156	6M66D3	PS393582
050-0012-GSK-KIT	KT0158	6M66D6	PS397115
050-0015-110-1	KT0158	6M68B8-SOG	PS397115
050-0015-130-1	KT0159	6M69C3	PS397135
050-0015-GSK-KIT	KT0159	6M69C6	PS397135
050-0020-110-1	KT0160	6M69D3	PS401166CCP
050-0020-130-1	KT0160	6M69D6	PS401166CCP
050-0020-GSK-KIT	KT0160	6M69N40	PS401166MCP
0501 04 10	KT0160	6M6A-C6L-1-BN-SS	PS401166MCP
0501 04 13	KT0162	6M6A-C6L-1-SS	PS4020L21CP
0501 06 17	KT0162	6M6A-C6L-5-BN-SS	PS4020L21CP
0502 04 10	KT0164	6M6A-C6L-5-SS	PS4020L61CP
0502 04 13	KT0164	6M6A-C6L-75-BN-SS	PS4020L61CP
0502 06 17	KT0164	6M72E8	PS4031010CP
0502 09 17	KT0164	6M74E2	PS4031010CP
050-319101	KT0165	6M76E2	PS4031011CP
0507-10-8	KT0165	6M76E8	PS4031011CP
0507-12-12	KT0165	6M78E8	PS4032CP
0507-16-16	KT0165	6M86N3-SOGWO	PS4032CP
0507-4-4	KT0166	6M89N6-SOGWO	PS4033CP
0507-6-8	KT0166	6M8A-C6L-100-SS	PS4033CP
0510 04 06	KT0166	6M8A-C6L-1-SS	PS4034CP
0510 05 08	KT0166	6M912B8-SOG	PS4034CP
0510 05 10	KT0167	6M916B8	PS4035CP
051-0500-900	KT0167	6M92E8	PS4035CP
051-0530-900	KT0167	6M94B2	PS4037155CP
052-0500-900	KT0167	6M94B2-OP	PS4037155CP
052-0530-900	KT0168	6M94B2-SOG	PS403P
0531 04 10	KT0168	6M94E2	PS403P
0531 04 13	KT0168	6M96B2	PS404
0531 06 13	KT0168	6M96E2	PS404
0531 06 17	KT0169	6MA2N-316	PS404123P
0531 10 21	KT0169	6MA2N-M	PS404123P
0532 04 10	KT0169	6MA2R-316	PS404142P
0532 04 13	KT0169	6MA4K-316	PS404142P
0532 06 13	KT0170	6MA4N-316	PS404145P
054-34026-0	KT0170	6MA4N-625	PS404145P
054-34034-000	KT0171	6MA4N-6MO	PS404157P
054-34075-003	KT0171	6MA4N-B	PS404157P
054-34078-003	KT0171	6MA4N-M	PS4041B9P
054-34092-000	KT0171	6MA4R-316	PS4041B9P
054-34107-000	KT0172	6MA6K-316	PS4042CP
054-34143-0	KT0172	6MA6N-316	PS4042CP
054-34143-000	KT0172	6MA6N-6MO	PS404P
054-34157-000	KT0172	6MA6N-B	PS404P
054-34171-019	KT0173	6MA6N-M	PS407P
054-34174-0	KT0173	6MA6R-316	PS407P

054-34174-000	KT0173	6MA8K-316	PS4131011CP
054-34270-028	KT0173	6MA8N-316	PS4131011CP
054-34272-0	KT0174	6MA8N-6MO	PS4132CP
054-34272-003	KT0174	6MA8N-B	PS4132CP
054-34296-000	KT0174	6MA8N-HC	PS4135CP
054-34296-001	KT0174	6MA8R-316	PS4135CP
054-34297-000	KT0175	6M-B6LJ2-SSP	PS4137155CP
054-34337-004	KT0175	6M-B6LJ-SSP	PS4137155CP
054-34350-000	KT0175	6M-B6XJ2-SSP	PS4138166CP
054-34367-0	KT0175	6M-B6XJ-SSP	PS4138166CP
054-34367-000	KT0176	6MBC4N-316	PS4142CP
054-34367-5	KT0176	6MBC6N-316	PS4142CP
054-34372-0	KT0177	6MBC8N-316	PS417B
054-34373-0	KT0177	6MBT4N-316	PS417B
054-34409-000	KT0178	6MBT4N-825	PS417BP
054-34410-043	KT0178	6MBT4N-B	PS417BP
054-34411-000	KT0178	6MBT4N-M	PS419
054-34412-038	KT0178	6MBT4R-316	PS419
054-34413-000	KT0179	6MBT6N-316	PS4231011CP
054-34419-000	KT0179	6MBT6N-6MO	PS4231011CP
054-34425-0	KT0179	6MBT6N-825	PS4242CP
054-34450-000	KT0179	6MBT8N-316	PS4242CP
054-34485-001	KT0180	6M-BV8-SS	PS43100P
054-34503-0	KT0180	6M-BV8-SS-T	PS43100P
054-34503-000	KT0181	6M-C6L-1/3-B	PS446P
054-34523-0	KT0181	6M-C6L-1/3-SS	PS446P
054-34523-000	KT0182	6M-C6L-100-B	PS4501F
054-34525-0	KT0182	6M-C6L-100-SS	PS4501F
054-34525-000	KT0183	6M-C6L-10-B	PS4516F
054-34525-001	KT0183	6M-C6L-10-SS	PS4516F
054-34526-0	KT0183	6M-C6L-1-B	PS4517F
054-34552-000	KT0183	6M-C6L-1-SS	PS4517F
054-34556-000	KT0184	6M-C6L-25-SS	PS4569F
054-34561-000	KT0184	6M-C6L-5-B	PS4569F
054-34562-000	KT0184	6M-C6L-5-BN-SS	PS475243W
054-34563-0	KT0184	6M-C6L-5-SS	PS475243W
054-34563-000	KT0185	6M-CO6L-1-KZ-SS-C3	PS475251W
054-34565-000	KT0185	6M-CO6L-1-V-SS	PS475251W
054-34568-000	KT0185	6MP7-MPBLPK-V-SSP	PS475261W
054-34571-000	KT0185	6MP7-MPCBL-5-SS	PS475261W
054-34613-002	KT0186	6MP7-MPCL-5-V-SS	PS475267W
054-34619-501	KT0186	6MP7-MPFL-100-SS	PS475267W
054-34632-0	KT0186	6MP7-MPNLB-T-SS	PS475276W
054-34632-000	KT0186	6MRT4N-316	PS475276W
054-34632-032	KT0187	6MRT4N-6MO	PS475366W
054-34633-0	KT0187	6MRT4N-825	PS475366W
054-34633-000	KT0187	6MRT4N-B	PS475369W
054-34633-029	KT0187	6MRT4N-M	PS475369W
054-34634-0	KT0188	6MRT6N-316	PS475416W
054-34634-003	KT0188	6MRT6N-M	PS475416W
054-34645-000	KT0188	6MSC12N-316	PS475428W
054-34647-000	KT0188	6MSC12N-6MO	PS475428W
054-34648-000	KT0189	6MSC12N-B	PS475432W

054-34661-0	KT0189	6MSC12N-IIY-NC	PS475432W
054-34661-001	KT0189	6MSC12N-M	PS475469W
054-34669-000	KT0189	6MSC12N-NNR	PS475469W
054-34696-0	KT0190	6MSC12N-TTZ	PS475470W
054-34696-000	KT0190	6MSC16N-316	PS475470W
054-34700-002	KT0191	6MSC2K-316	PS475510W
054-34782-0	KT0191	6MSC2K-6MO	PS475510W
054-34783-012	KT0192	6MSC2N-316	PS475511W
054-34813-003	KT0192	6MSC2N-6MO	PS475511W
054-34831-0	KT0193	6MSC2N-6MO-NC	PS475512W
054-34831-000	KT0193	6MSC2N-B	PS475512W
054-34832-502	KT0193	6MSC2N-IIY	PS475539W
054-34837-000	KT0193	6MSC2N-M	PS475539W
054-34852-000	KT0194	6MSC2R-316	PS506P
054-34862-000	KT0194	6MSC4K-316	PS506P
054-34863-0	KT0195	6MSC4K-6MO	PS512
054-34863-000	KT0195	6MSC4K-B	PS512
054-34864-027	KT0198	6MSC4N-316	PS5171
054-34870-000	KT0198	6MSC4N-6MO	PS5171
054-34870-001	KT0198	6MSC4N-825	PS5399
054-34883-000	KT0198	6MSC4N-B	PS5399
054-34893-000	KT0201	6MSC4N-IIY	PS5409
054-34920-0	KT0201	6MSC4N-IIY-NC	PS5409
054-34930-002	KT0202	6MSC4N-M	PS551154JP
054-34931-000	KT0202	6MSC4N-NNR	PS551154JP
054-34932-003	KT0202	6MSC4N-TTZ	PS551154MP
054-34960-000	KT0202	6MSC4R(ED)-316	PS551154MP
054-34967-000	KT0204	6MSC4R-316	PS551154NP
054-34992-000	KT0204	6MSC4R-6MO	PS551154NP
054-34992-002	KT0205	6MSC4R-825	PS551154PP
054-34993-000	KT0205	6MSC4R-B	PS551154PP
054-35021-0	KT0207	6MSC4REDV-316	PS551164MP
054-35037-000	KT0207	6MSC4R-IIY	PS551164MP
054-35041-0	KT0210	6MSC4R-NNR	PS5534P
054-35065-002	KT0210	6MSC6K-316	PS5534P
054-35076-002	KT0212	6MSC6K-6MO	PS5535P
054-35109-000	KT0212	6MSC6K-B	PS5535P
054-35110-000	KT0214	6MSC6K-M	PS5537166P
054-35127-0	KT0214	6MSC6N-316	PS5537166P
054-35133-0	KT0223	6MSC6N-6MO	PS5537266P
054-35133-000	KT0223	6MSC6N-825	PS5537266P
054-35140-000	KT0223	6MSC6N-B	PS5538166P
054-35141-0	KT0223	6MSC6N-IIY	PS5538166P
054-35141-002	KT0224	6MSC6N-M	PS5538266P
054-35142-038	KT0224	6MSC6N-NNR	PS5538266P
054-35143-038	KT0225	6MSC6N-TTZ	PS561152JP
054-35144-000	KT0225	6MSC6R-316	PS561152JP
054-35149-000	KT0226	6MSC6R-825	PS561152MP
054-35174-000	KT0226	6MSC6R-B	PS561152MP
054-35224-0	KT0227	6MSC6R-ED-316	PS561152NP
054-35229-000	KT0227	6MSC6R-IIY	PS561152NP
054-35232-0	KT0228	6MSC8K-316	PS561152PP
054-35232-000	KT0228	6MSC8K-6MO	PS561152PP

054-35259-002	KT0229	6MSC8N-316	PS561162MP
054-35273-000	KT0229	6MSC8N-6MO	PS561162MP
054-35277-000	KT0230	6MSC8N-825	PS561AP
054-35310-0	KT0230	6MSC8N-B	PS561AP
054-35310-000	KT0232	6MSC8N-IIY	PS561BP
054-35335-000	KT0232	6MSC8N-IIY-NC	PS561BP
054-35335-002	KT0232	6MSC8N-M	PS561CP
054-35340-000	KT0232	6MSC8N-NNR	PS561CP
054-35340-002	KT0234	6MSC8N-TTZ	PS5620L21P
054-35368-0	KT0234	6MSC8R-316	PS5620L21P
054-35368-002	KT0236	6MSC8R-825	PS5620L61P
054-35396-003	KT0236	6MSC8R-NNR	PS5620L61P
054-35447-002	KT0238	6MSEL12N-316	PS5631011P
054-35492-0	KT0238	6MSEL12N-M	PS5631011P
054-35493-004	KT0239	6MSEL2K-316	PS5634P
054-35502-0	KT0239	6MSEL2N-316	PS5634P
054-35509-000	KT0242	6MSEL2N-6MO	PS5637166P
054-35515-0	KT0242	6MSEL2N-IIY	PS5637166P
054-35525-0	KT0246	6MSEL2N-M	PS5638133P
054-35525-000	KT0246	6MSEL4K-316	PS5638133P
054-35562-0	KT0247	6MSEL4N-316	PS5651160P
054-35565-000	KT0247	6MSEL4N-6MO	PS5651160P
054-35572-003	KT0247	6MSEL4N-6MO-NC	PS60-003-S2/MU60-001
054-35612-0	KT0247	6MSEL4N-825	PS60-003-S2/MU60-003
054-35613-0	KT0248	6MSEL4N-B	PS60-003-S2/MU60-321
054-35613-010	KT0248	6MSEL4N-IIY	PS60-004-S2/MU60-321
054-35635-0	KT0248	6MSEL4N-M	PS60-005-L2/MU60-003
054-35635-002	KT0248	6MSEL4N-NNR	PS60-005-L2/MU60-254
054-35670-004	KT0249	6MSEL4R-316	PS60-005-S2/MU60-001
054-35674-002	KT0249	6MSEL6K-316	PS60-005-S2/MU60-003
054-35675-0	KT0250	6MSEL6K-M	PS60-005-S2/MU60-035
054-35680-000	KT0250	6MSEL6N-316	PS60-005-S2/MU60-321
054-35703-0	KT0251	6MSEL6N-6MO	PS60007-B
054-35705-0	KT0251	6MSEL6N-B	PS60007-B
054-35705-000	KT0252	6MSEL6N-M	PS60-007-S2/MU60-001
054-35712-010	KT0252	6MSEL6N-NNR	PS60-007-S2/MU60-254
054-35724-4	KT0253	6MSEL6R-316	PS60-010-L2/MU60-001
054-35742-0	KT0253	6MSEL8K-316	PS60-010-S2
054-35775-015	KT0254	6MSEL8N-316	PS60-010-S2/MU60-001
054-35779-002	KT0254	6MSEL8N-6MO	PS60-010-S2/MU60-003
054-35788-0	KT0255	6MSEL8N-B	PS60-020-S2/MU60-003
054-35790-001	KT0255	6MSEL8N-IIY	PS60021-A
054-35791-001	KT0257	6MSEL8N-M	PS60021-A
054-35821-000	KT0257	6MSEL8R-316	PS60-025-S2/MU60-321
054-35839-000	KT0258	6MTC12N-316	PS60-040-L2/MU60-003
054-35839-006	KT0258	6MTC4N-316	PS60-050-S2/MU60-001
054-35865-000	KT0259	6MTC4N-825	PS60-050-S2/MU60-003
054-35878-5	KT0259	6MTC6N-316	PS60-100-S2/MU60-003
054-35878-500	KT0260	6MTC6N-IIY	PS701P
054-35879-0	KT0260	6MTC6N-M	PS701P
054-35906-000	KT0261	6MTC8N-316	PS702P
054-35917-0	KT0261	6M-V6LK-SS	PS702P
054-35917-000	KT0262	6M-V6LN-B	PS707P

054-35919-0	KT0262	6M-V6LN-SS	PS707P
054-35920-0	KT0263	6M-V6LR-B	PS710P
054-35920-000	KT0263	6M-V6LR-SS	PS710P
054-35954-0	KT0264	6MVEL2N-316	PS724P
054-35968-000	KT0264	6MVEL4N-316	PS724P
054-35988-000	KT0266	6MVEL6N-316	PS732P
054-35989-000	KT0266	6MX124K2	PS732P
054-35992-5	KT0272	6MX126K2	PS740N
054-35992-504	KT0272	6MX164K2	PS740N
054-35996-000	KT0273	6MX166K2	PS740P
054-36015-000	KT0273	6MX168K8	PS740P
054-36029-000	KT0275	6MX42K8	PS754P
054-36076-002	KT0275	6MX44F9	PS754P
054-36134-0	KT0276	6MX44K2	PS755P
054-36137-5	KT0276	6MX46F9	PS755P
054-36137-500	KT0277	6MX46K2	PS756P
054-36154-5	KT0277	6MX48F9	PS756P
054-36179-0	KT0278	6MX64F9	PS766P
054-36192-000	KT0278	6MX64F9-SMT	PS766P
054-36202-000	KT0280	6MX64K2	PS769
054-36224-000	KT0280	6MX64K2-OP	PS769
054-36225-000	KT0280	6MX66F9	PS781P
054-36226-009	KT0280	6MX66K2	PS781P
054-36231-002	KT0282	6MX68F9	PS801P
054-36231-5	KT0282	6MX94F9	PS801P
054-36233-000	KT0284	6MX94K2	PS802P
054-36238-009	KT0284	6MX96F9	PS802P
054-36239-000	KT0286	6MX96K2	PS805P
054-36268-000	KT0286	6MX98F9	PS805P
054-36296-002	KT0289	6N1022S	PS807P
054-36321-002	KT0289	6N1227S	PS807P
054-36329-0	KT0292	6NU6-316	PS808P
054-36354-000	KT0292	6NU6-625	PS808P
054-36370-000	KT0296	6NU6-6MO	PS810P
054-36372-0	KT0296	6NU6-825	PS810P
054-36390-000	KT0296	6NU6-B	PS822P
054-36461-000	KT0296	6NU6-HC	PS822P
054-36498-000	KT0297	6NU6-M	PS824P
054-36519-000	KT0297	6P2TU6-316	PS824P
054-36542-000	KT0297	6PC6-316	PS830P
054-36546-003	KT0297	6PC6-6MO	PS830P
054-36553-000	KT0298	6PC6-HC	PS831P
054-36559-0	KT0298	6PC8-316	PS831P
054-36563-0	KT0298	6PC8-6MO	PS832P
054-36578-000	KT0298	6PH-625	PS832P
054-36600-000	KT0299	6PH-M	PS843P
054-36653-0	KT0299	6PL-Q8CY-SSP	PS843P
054-36653-000	KT0299	6PNMK4S	PS846P
054-36659-003	KT0299	6PNMK4SS	PS846P
054-36666-000	KT0300	6PNMKAS	PS852P
054-36671-004	KT0300	6PNMLOS	PS852P
054-36674-000	KT0300	6PNMLOSS	PS854P
054-36686-000	KT0300	6PNMTXS	PS854P

054-36689-043	KT0301	6PNMTXSS	PS857P
054-36695-0	KT0301	6R PH-SS	PS857P
054-36696-002	KT0302	6R3MXS	PS8600-1/2F
054-36704-0	KT0302	6R4OMLOS	PS867P
054-36738-000	KT0302	6R4OMXS	PS867P
054-36746-5	KT0302	6R4OMXSS	PS869
054-36746-500	KT0303	6R5OMLOS	PS869
054-36747-500	KT0303	6R-6 RA-SS	PS90-003-S2/MU90-001
054-36766-0	KT0303	6R6MK4S	PS90-003-S2/MU90-088
054-36766-000	KT0303	6R6MK4SS	PS90-004-S2/MU90-088
054-36798-002	KT0304	6R6MLOS	PS90-004-S2/MU90-345
054-36809-0	KT0304	6R6MLOSBP	PS90-005-S2/MU90-001
054-36829-000	KT0304	6R6MLOSS	PS90-005-S2/MU90-088
054-36846-000	KT0304	6R6MLOSSEPDM	PS90-007-S2/MU90-001
054-36887-0	KT0305	6R6MXS	PS90-007-S2/MU90-088
054-36887-000	KT0305	6R6MXSBP	PS90-010-L2/MU90-001
054-36919-000	KT0305	6R6MXSBPNB	PS90-010-S2/MU90-001
054-36921-003	KT0305	6RHDMLOSCF	PS90-010-S2/MU90-085
054-36931-0	KT0306	6RHDMTXSCF	PS90-010-S2/MU90-088
054-36938-002	KT0306	6RHV5OMLOSCF	PS90-020-S2/MU90-088
054-36945-0	KT0307	6RHV5OMLOSSP161CF	PS90-025-036L2/MU90-085
054-36945-002	KT0307	6RHZ42EDMLOSCF	PS90-040-L2/MU90-001
054-36946-0	KT0308	6RHZ5OMLOSCF	PS90-040-S2/MU90-085
054-36975-5	KT0308	6RHZ5OMXSCF	PS90-050-L2/MU90-001
054-36990-0	KT0308	6RU1-316	PS90-050-S2/MU90-001
054-36990-000	KT0308	6RU2-316	PS90-050-S2/MU90-088
054-36994-022	KT0309	6RU2-6MO	PS90-100-S2/MU90-085
054-36997-0	KT0309	6RU4-316	PS95011P
054-37003-000	KT0310	6RU4-6MO	PS95011P
054-37060-002	KT0310	6RU4-825	PS954P
054-37072-0	KT0311	6RU4-B	PS954P
054-37096-000	KT0311	6RU4-IIY	PS955P
054-37102-000	KT0312	6RU4-M	PS955P
054-37134-000	KT0312	6RU4-NNR	PS95601P
054-37142-000	KT0313	6RU4-TTZ	PS95601P
054-37179-000	KT0313	6RU5-316	PS95711P
054-37195-003	KT0313	6S3MXS	PS95711P
054-37197-002	KT0313	6S4OMLOS	PS963P
054-37223-000	KT0314	6S4OMXS	PS963P
054-37238-500	KT0314	6S4OMXSS	PSB040AF11
054-37239-000	KT0314	6S5OMLOS	PSB040AF11Z
054-37240-000	KT0314	6S5OMXS	PSB040AF1A
054-37282-0	KT0315	6S6MK4S	PSB040AF1AX811
054-37290-000	KT0315	6S6MK4SS	PSB040AF1AZ
054-37299-0	KT0315	6S6MLOS	PSB040AV11
054-37313-0	KT0315	6S6MLOSS	PSB040AV1A
054-37313-000	KT0316	6S6MXS	PSB040AV1AZ
054-37377-000	KT0316	6S6MXSS	PSB040SF1A
054-37400-000	KT0317	6SC6-316	PSB040SV1A
054-37475-000	KT0317	6SC6-6MO	PSB100AF11
054-37481-000	KT0319	6SC6-6MO-NC	PSB100AF11Z
054-37504-000	KT0319	6SC6-825	PSB100AF1A
054-37505-000	KT0321	6SC6-B	PSB100AF1AZ

054-37525-000	KT0321	6SC6-IIY	PSB100AV11
054-37526-000	KT0321	6SC6-M	PSB100AV1A
054-37543-000	KT0321	6SC6-NNR	PSB100AV1AZ
054-37555-0	KT0322	6SC6-TTZ	PSB100SF1A
054-37555-002	KT0322	6-TMG	PSB100SV1A
054-37560-500	KT0322	6TT4MLS	PS-B12-M10-NO
054-37602-0	KT0322	6TT4MLSS	PS-B-13
054-37639-0	KT0323	6TT4MXS	PS-B-15
054-37646-0	KT0323	6TT4MXSBP	PSB160AF11
054-37651-0	KT0323	6TT4MXSS	PSB160AF11Z
054-37673-000	KT0323	6TT8MLS	PSB160AF1A
054-37681-0	KT0324	6TTP4MLS	PSB160AF1AX811
054-37687-000	KT0324	6TTP4MXS	PSB160AF1AZ
054-37729-0	KT0324	6TUBC6-316	PSB160AV11
054-37730-0	KT0324	6TUCM10-316	PSB160AV1A
054-37734-0	KT0325	6TUCM12-316	PSB160AV1AZ
054-37739-000	KT0325	6TUCM6-316	PSB160SF11
054-37748-0	KT0326	6TUCM8-316	PSB160SF1A
054-37824-000	KT0326	6TUR2-316	PSB160SV11
054-37852-000	KT0327	6TUR2-6MO	PSB160SV1A
054-37918-0	KT0327	6TUR4-316	PS-B-17
054-37997-0	KT0328	6TUR4-825	PS-B-22
054-38006-0	KT0328	6TUR4-IIY	PSB250AF11
054-38006-013	KT0329	6TUR4-M	PSB250AF1A
054-38013-000	KT0329	6TUR4-NNR	PSB250AF1AZ
054-38025-001	KT0330	6TUR5-316	PSB250AV11
054-38026-001	KT0330	6TUR6-316	PSB250AV11Z
054-38046-0	KT0331	6TUR8-316	PSB250AV1A
054-38062-500	KT0331	6TUR8-6MO	PSB250AV1AZ
054-38069-0	KT0332	6TUR8-NNR	PSB250SF11
054-38123-0	KT0332	6V1300030F-100	PSB250SF1A
054-38153-500	KT0332	6V1300030F-100	PSB250SV11
054-38248-0	KT0332	6V1300030F-280	PSB250SV1A
054-38254-000	KT0333	6V1300030F-280	PS-B-33
054-38270-000	KT0333	6V1357630F-220	PS-B-35
054-38275-5	KT0333	6V1357630F-220	PS-B-37
054-38275-500	KT0333	6V1357635F-220	PS-B-39
054-38319-003	KT0334	6V1357635F-220	PS-B-45
054-38327-000	KT0334	6V1357735F-100	PS-B-47
054-38332-5	KT0335	6V1357735F-100	PSBA12
054-38337-000	KT0335	6V1357736F-100	PSBA12
054-38360-0	KT0336	6V1357736F-100	PSB-A12
054-38360-000	KT0336	6V13Y005	PSB-A12
054-38362-000	KT0337	6V13Y005	PSB-G1
054-38380-000	KT0337	6V2400030F-100	PSB-R2
054-38395-003	KT0337	6V2400030F-100	PSB-R3
054-38447-0	KT0337	6V2400030F-280	PS-BV-300
054-38448-5	KT0338	6V2400030F-280	PS-BV-400
054-38448-500	KT0338	6V2457635F-220	PS-BV-500
054-38552-003	KT0340	6V2457635F-220	PS-BV-700
054-38618-0	KT0340	6V2457735F-100	PSCFA10/L/17.5BS
054-38619-0	KT0340	6V2457735F-100	PSCFA10/S/17.5BS
054-38652-000	KT0340	6V24R	PSCFA13/L/21.6BS

054-38679-000	KT0341	6V24R	PSCFA13/S/21.6BS
054-38707-500	KT0341	6V24Y000	PSCFA19/L/27.2BS
054-38721-000	KT0342	6V24Y000	PSCFA19/S/27.2BS
054-38735-000	KT0342	6V3MXS	PSCFA25/L/34.5BS
054-38736-034	KT0345	6V3P4S	PSCFA25/S/34.5BS
054-38789-000	KT0345	6V3T4S	PSCFA32/L/43BS
054-38794-000	KT0346	6V4OMLOS	PSCFA32/S/43BS
054-38826-000	KT0346	6V4OMXS	PSCFA38/L/48.6BS
054-38844-000	KT0347	6V5100010F-095	PSCFA38/S/48.6BS
054-38858-5	KT0347	6V5100010F-095	PSCFA51/L/61BS
054-38881-000	KT0347	6V5100010F-275	PSCFA51/S/61BS
054-38905-000	KT0347	6V5100010F-275	PSCFA56/L/76.6BS
054-38940-000	KT0348	6V5200010F-095	PSCFA56/S/76.6BS
054-38947-000	KT0348	6V5200010F-095	PSCFA63/L/89BS
054-38977-000	KT0348	6V5200010F-275	PSCFA63/S/89BS
054-38979-0	KT0348	6V5200010F-275	PSCFA70/S/102BS
054-38979-000	KT0349	6V5OMXS	PSCFA80/L/114BS
054-39070-5	KT0349	6V5OMXSV	PSCFA80/S/114BS
054-39162-003	KT0349	6V6MLOS	PSCFP10/L/18BS
054-39178-000	KT0349	6V6MXS	PSCFP10/S/18BS
054-39196-003	KT0350	6V8638	PSCFP13/L/24BS
054-39236-000	KT0350	6V8731	PSCFP13/S/24BS
054-39265-000	KT0351	6V8789	PSCFP19/L/31.5BS
054-39270-003	KT0351	6V9872	PSCFP19/S/32BS
054-39273-000	KT0351	6WEMLOS	PSCFP25/L/38BS
054-39383-000	KT0351	6WEMLOSEPDM	PSCFP25/S/38BS
054-39384-000	KT0352	6WEMLOWLNMLS	PSCFP32/L/43BS
054-39417-0	KT0352	6WEMTXWLNMS	PSCFP32/S/43BS
054-39440-002	KT0352	6WLNMLS	PSCFP32/S/44BS
054-39451-000	KT0352	6WLNMS	PSCFP32/S/44BSS
054-39476-002	KT0353	6WLNMSS	PSCFP38/L/50BS
054-39476-003	KT0353	6WMK4WL4NMS	PSCFP38/S/51BS
054-39480-003	KT0353	6WMK4WL4NMSS	PSCFP38/S/51BSS
054-39482-003	KT0353	6WMLOS	PSCFP51/L/62BS
054-39483-003	KT0354	6WMLOSEPDM	PSCFP51/S/67BS
054-39489-000	KT0354	6WMLOWLNMLS	PSCFP56/L/76BS
054-39522-0	KT0354	6WMLOWLNMLSS	PSCFP56/S/80BS
054-39542-0	KT0354	6WMTXS	PSCFP63/L/90BS
054-39542-003	KT0355	6WMTXWLNMS	PSCFP63/S/90BS
054-39567-003	KT0355	6WMTXWLNMSBP	PSCFP70/S/102BS
054-39626-006	KT0355	6WMTXWLNMSS	PSCFP80/L/114BS
054-39673-003	KT0355	6X6TU6-316	PSCFP80/S/114BS
054-39674-003	KT0356	6XABC6-316	PSD-A12
054-39675-003	KT0356	6XABC8-316	PSD-A12
054-39676-014	KT0358	6XASC4-316	PSD-B12
054-39756-000	KT0358	6XASC6-316	PSD-B12
054-39763-000	KT0359	6XASC6-825	PSE-A12
054-45012-000	KT0359	6XASC6-IIY	PSE-A12
054-45014-502	KT0359	6XASC8-316	PSE-A127
054-45016-000	KT0359	6XASCM10-316	PSE-A127
054-45037-003	KT0360	6XASCM6-316	PSF10/L/17.5BS
054-45127-000	KT0360	6XATU6-316	PSF10/S/17.5BS
054-45237-003	KT0362	6XHML6SS	PSF13/L/21.6BS

054-45269-003	KT0362	6XHMLOSS	PSF13/S/21.6BS
054-45270-003	KT0362	6Y25X-16-12C	PSF19/L/27.2BS
054-45272-003	KT0362	6Y45X-6-3C	PSF19/S/27.2BS
054-45306-000	KT0363	6Y45X-9-3C	PSF25/L/34.5BS
054-45309-003	KT0363	6Y4HX-16-8C	PSF25/S/34.5BS
054-45335-0	KT0364	6Y4HX-4-2AC	PSF32/L/43BS
054-45375-000	KT0364	6Y4HX-6-2AC	PSF32/S/43BS
054-45395-003	KT0365	6Y4HX-6-3C	PSF38/L/48.6BS
054-45408-000	KT0365	6Y4HX-9-3C	PSF38/S/48.6BS
054-45409-003	KT0366	6Y4WX-16-8C	PSF51/L/61BS
054-45433-503	KT0366	6YHLX-4-3C-PL-LH	PSF51/S/61BS
054-45454-001	KT0369	6YHLX-6-4C-PL-LH	PSF56/L/76.6BS
054-45471-000	KT0369	6YM5X-6-3C	PSF56/S/76.6BS
054-45472-003	KT0370	6YMHX-12-8C	PSF63/L/89BS
054-45477-003	KT0370	6YMHX-6-3C	PSF63/S/89BS
054-45482-002	KT0371	6YMWX-11-8C	PSF70/S/102BS
054-45485-003	KT0371	6YMWX-12-8C	PSF80/L/114BS
054-45486-000	KT0372	6YMWX-6-5C-55	PSF80/S/114BS
054-45517-0	KT0372	6Z-B6LJ-SSP	PSFA10/L/17.5BS
054-45536-000	KT0373	7/16UNF-3-SS/4	PSFA10/S/17.5BS
054-45551-000	KT0373	7/16X20 UNF-2B	PSFA13/L/21.6BS
054-45701-0	KT0373	7/8X14 UNF-2B	PSFA13/S/21.6BS
054-45861-0	KT0373	7000 00 00	PSFA19/L/27.2BS
054-45938-000	KT0374	7000 00 01	PSFA19/S/27.2BS
054-45966-004	KT0374	7000 00 04	PSFA25/L/34.5BS
054-45981-0	KT0376	7000 00 05	PSFA25/S/34.5BS
054-45981-013	KT0376	7000 00 06	PSFA32/L/43BS
054-45984-000	KT0377	70000-09	PSFA32/S/43BS
054-45985-000	KT0377	7000-31181-0000000	PSFA38/L/48.6BS
054-45987-003	KT0378	7001-00-00	PSFA38/S/48.6BS
054-46000-0	KT0378	7001P99872	PSFA51/L/61BS
054-46000-000	KT0380	7001P99872	PSFA51/S/61BS
054-46001-0	KT0380	7001P99934	PSFA56/L/76.6BS
054-46002-000	KT0381	7001P99934	PSFA56/S/76.6BS
054-46003-000	KT0381	7001P99937	PSFA63/L/89BS
054-46004-0	KT0382	7001P99937	PSFA63/S/89BS
054-46040-001	KT0382	7001P99946	PSFA70/S/102BS
054-46058-5	KT0382	7001P99946	PSFA80/L/114BS
054-46058-500	KT0382	7001P99951	PSFA80/S/114BS
054-46058-501	KT0384	7001P99951	PSFC/L/10S
054-46116-0	KT0384	700-212-AS-0-POL-0	PSFC/L/13S
054-46116-000	KT0385	7003-CB-00	PSFC/L/19S
054-46158-000	KT0385	7003-DN-00	PSFC/L/25S
054-46218-0	KT0386	7003-EC-00	PSFC/L/32S
054-46220-500	KT0386	7003-IM-00	PSFC/L/38S
054-46221-001	KT0387	7003-IP-00	PSFC/L/51S
054-46236-000	KT0387	7003-PB-00	PSFC/L/56S
054-46239-0	KT0389	7003-PN-00	PSFC/L/63S
054-46239-000	KT0389	7003-RS-00	PSFC/L/80S
054-46316-0	KT0392	7004-01-00	PSFC/S/10S
054-46354-000	KT0392	7004-02-00	PSFC/S/13S
054-46357-0	KT0392	7004-03-00	PSFC/S/19S
054-46374-501	KT0392	700-70590-8	PSFC/S/25S

054-46431-0	KT0394	700-70619-8	PSFC/S/32S
054-46542-0	KT0394	700-71723-8	PSFC/S/32SS
054-46565-0	KT0395	700-71843-8	PSFC/S/38S
054-46593-0	KT0395	700-72269-8	PSFC/S/38SS
054-46606-0	KT0395	700-74637-8	PSFC/S/51S
054-46616-0	KT0395	700-77003-8	PSFC/S/56S
054-46632-0	KT0396	700-77074-8	PSFC/S/63S
054-46632-027	KT0396	700-77081-8	PSFC/S/70S
054-46772-0	KT0397	7010 00 00 03	PSFC/S/80S
054-46831-0	KT0397	7010 04 10	PSFP10/L/18BS
054-46838-0	KT0402	7010 04 19	PSFP10/S/18BS
054-46840-5	KT0402	7010 04 20	PSFP13/L/24BS
054-46840-501	KT0408	7010 06 10	PSFP13/S/24BS
054-46925-0	KT0408	7010 06 13	PSFP19/L/31.5BS
054-46933-0	KT0409	7010 06 19	PSFP19/S/32BS
054-46972-0	KT0409	7010 08 10	PSFP25/L/38BS
054-46972-001	KT0410	7010 08 13	PSFP25/S/38BS
054-47006-0	KT0410	7010 08 17	PSFP32/L/43BS
054-47007-0	KT0410	7010 10 13	PSFP32/S/44BS
054-47017-0	KT0410	7010 10 17	PSFP32/S/44BSS
054-47042-0	KT0412	7010 10 21	PSFP38/L/50BS
054-47181-0	KT0412	7010 12 17	PSFP38/S/51BS
054-47228-0	KT0413	7010 12 21	PSFP38/S/51BSS
054-47250-5	KT0413	7010 56 20	PSFP51/L/62BS
054-47254-0	KT0415	701-00008-8	PSFP51/S/67BS
054-47289-0	KT0415	701-00153-8	PSFP56/L/76BS
054-47317-028	KT0415	701-00154-8	PSFP56/S/80BS
054-47326-000	KT0415	701-00155-8	PSFP63/L/90BS
054-47330-0	KT0416	701-00156-8	PSFP63/S/90BS
054-47374-003	KT0416	701-00504-8	PSFP70/S/102BS
054-47385-003	KT0417	701-00506-8	PSFP80/L/114BS
054-47413-000	KT0417	701-00508-8	PSFP80/S/114BS
054-47427-0	KT0418	701-00512-8	PSG-25
054-47436-0	KT0418	701-00600-8	PSKHTR1.8
054-47437-0	KT0419	701-00600-F001	PSKHTR1.8V
054-47437-004	KT0419	701-00601-8	PSKHTR10
054-47466-000	KT0420	701-00602-8	PSKHTR15
054-47597-000	KT0420	701-00603-8	PSKHTR150
054-47624-001	KT0421	701-00605-8	PSKHTR150V
054-47641-0	KT0421	701-00606-8	PSKHTR15W
054-47653-0	KT0421	701-00610-8	PSKHTR22
054-47675-0	KT0421	701-00611-8	PSKHTR3.7
054-47722-500	KT0422	701-00613-8	PSKHTR3.7V
054-47727-000	KT0422	701-00614-8	PSKHTR30
054-47742-0	KT0423	701-00615-8	PSKHTR300
054-47763-0	KT0423	701-00632-8	PSKHTR45
054-47763-003	KT0423	7011 04 10	PSKHTR45V
054-47808-0	KT0423	7011 04 19	PSKHTR5
054-47812-0	KT0424	7011 06 10	PSKHTR600
054-47817-0	KT0424	7011 06 13	PSKHTR7.5
054-47871-0	KT0425	7011 06 19	PSKHTR75
054-47871-000	KT0425	7011 08 10	PSKHTR75V
054-47872-0	KT0426	7011 08 13	PSKLTR201

054-47872-000	KT0426	7011 08 17	PSKLTR251
054-47873-0	KT0427	7011 10 13	PSK-P5T20
054-47899-0	KT0427	7011 10 17	PSK-P5T20
054-47900-0	KT0428	7011 56 20	PSK-P5T32
0562 05 10	KT0428	701-10	PSK-P5T32
0562 05 13	KT0431	701-12	PSK-P5T40
0562 05 60	KT0431	701-16	PSK-P5T40
0563 05 14	KT0432	7012 04 10	PSK-P5T50
056-40009-H	KT0432	7012 04 19	PSK-P5T50
056-40011-0	KT0432	7012 06 10	PSK-PV10
056-40021-H	KT0432	7012 06 13	PSK-PV10
056-40022-H	KT0433	7012 06 19	PSK-PV22D
056-40056-S	KT0433	7012 08 10	PSK-PV22D
056-40068-H	KT0434	7012 08 13	PSK-PV33
056-40073-0	KT0434	7012 08 17	PSK-PV33
056-40076-G	KT0435	7015 56 11	PSK-PV33D
056-40077-G	KT0435	701-6	PSK-PV33D
056-40078-G	KT0435	701-8	PS-L-50
056-40079-G	KT0435	7020 04 10	PSM0001
056-40079-H	KT0436	7020 06 10	PSM0001
056-40090-H	KT0436	7020 06 13	PSM0004
056-40096-5	KT0437	7020 08 10	PSM0004
056-40097-0	KT0437	7020 08 13	PSM0010
056-40099-H	KT0438	702293-11X5268	PSM0010
056-40100-0	KT0438	7030 06 00	PSM0011
056-40105-0	KT0439	7030 08 00	PSM0011
056-40121-0	KT0439	7030 10 00	PSM0012
056-40123-H	KT0440	7030 12 00	PSM0012
056-40145-H	KT0440	703-0375062-XX0018	PSM0013
056-40164-H	KT0441	7031 06 00	PSM0013
056-40173-H	KT0441	7031 08 00	PSM0014
056-40188-0	KT0442	7031 10 00	PSM0014
056-40194-G	KT0442	7031 12 00	PSM21JAP
056-40195-H	KT0442	7040 06 10	PSM21JAP
056-40211-0	KT0442	7040 06 13	PSM21MAP
056-40216-0	KT0443	7040 08 10	PSM21MAP
056-40226-H	KT0443	7040 08 13	PSM22JAP
056-40239-H	KT0445	7040 08 17	PSM22JAP
056-40246-S	KT0445	7040 10 13	PSM22MAP
056-40247-0	KT0446	7040 10 17	PSM22MAP
056-40252-G	KT0446	7040 12 17	PSM31JAPE0E0E0E0
056-40271-H	KT0447	7040 12 21	PSM31JAPE0E0E0E0
056-40278-0	KT0447	7041 06 13	PSM31MAP20202020
056-40307-H	KT0448	7041 08 10	PSM31MAP20202020
056-40308-H	KT0448	7041 08 13	PSM31MAPN0N0N0N0
056-40309-0	KT0449	7045 06 13	PSM31MAPN0N0N0N0
056-40324-H	KT0449	7045 08 10	PSM32MAPN0N0N0N0
056-40325-G	KT0450	7045 08 13	PSM32MAPN0N0N0N0
056-40361-H	KT0450	7045 08 17	PSM-A10
056-40367-0	KT0451	7045 10 13	PSM-A10
056-40369-G	KT0451	7045 12 17	PSM-A10-EX
056-40385-0	KT0452	7045 12 21	PSM-A10-EX
056-40394-0	KT0452	705-0250047-NT1502	PSM-A12

056-40420-HL	KT0453	705-0250047-XX0018	PSM-A12
056-40426-0	KT0453	705-0250047-XX0024	PSM-A12-EX
056-40453-B	KT0454	705-0250062-XX0024	PSM-A12-EX
056-40455-0	KT0454	705-0375062-NT121.77	PSM-B12
056-40479-HL	KT0455	705-0375062-XX0006	PSM-B12
056-40484-H	KT0455	705-0375062-XX0012	PSML213/3004002
056-40491-0	KT0456	705-0375062-XX0018	PSML213/3004002
056-40520-H	KT0456	705-0375062-XX0024	PSML21AP
056-40525-0	KT0457	705-0500062-XX0012	PSML21AP
056-40528-H	KT0457	705-0500062-XX0018	PSML22AP
056-40551-H	KT0458	705-0500062-XX0024	PSML22AP
056-40562-H	KT0458	70562A77360	PSML61AP
056-40588-H	KT0460	70562A77360	PSML61AP
056-40589-H	KT0460	7060 04 10	PSMM41AP
056-40590-HL	KT0460	7060 06 10	PSMM41AP
056-40591-H	KT0460	7060 06 13	PSMM51AP
056-40599-H	KT0461	7060 06 67	PSMM51AP
056-40601-B	KT0461	7060 08 10	PSMM61AP
056-40606-5	KT0462	7060 08 13	PSMM61AP
056-40612-HL	KT0462	7060 08 17	PSMM71AP
056-40621-HL	KT0462	7060 08 67	PSMM71AP
056-40633-H	KT0462	7060 10 13	PSMMC1AP
056-40635-0	KT0463	7060 10 17	PSMMC1AP
056-40639-G	KT0463	7060 12 17	PSMMP1AP
056-40640-G	KT0463	7060 12 21	PSMMP1AP
056-40641-G	KT0463	7061 04 10	PSMT11AP
056-40647-0	KT0464	7061 06 10	PSMT11AP
056-40648-HL	KT0464	7061 06 13	PSMT21AP
056-40651-0	KT0465	7061 08 10	PSMT21AP
056-40664-HL	KT0465	7061 08 13	PSP1233
056-40674-H	KT0466	7061 08 17	PSP1733
056-40675-H	KT0466	7061 10 13	PS-PTFE
056-40678-0	KT0467	7061 10 17	PSR06LBPX
056-40680-G	KT0467	7061 12 21	PSR06LKLT
056-40681-G	KT0468	7062 04 10	PSR06LX
056-40687-H	KT0468	7062 06 10	PSR08LBPX
056-40699-H	KT0468	7062 06 13	PSR08LKLT
056-40706-S	KT0468	7062 08 10	PSR08LX
056-40714-HL	KT0469	7062 08 13	PSR10LKLT
056-40716-HL	KT0469	7062 08 17	PSR10LVOLX
056-40742-0	KT0469	7065 06 10	PSR10LX
056-40743-0	KT0469	7065 08 10	PSR10LXBP
056-40751-S	KT0470	7065 08 13	PSR12LKLT
0591 03 10	KT0470	7065 10 13	PSR12LVOLX
0591 04 13	KT0472	7065 10 17	PSR12LX
0591 05 17	KT0472	7065 10 21	PSR12LXBP
0591 06 21	KT0473	7065 12 13	PSR14SX
05E1RB13AB1	KT0473	7065 12 17	PSR15LKLT
05E1RB13AB1	KT0473	7065 12 21	PSR15LVOLX
05E1TB18A*1	KT0473	7066 10 13	PSR15LX
05E1TB18A*1	KT0474	7066 10 17	PSR15LXBP
05R113AD1	KT0474	7066 10 21	PSR16SX
05R113AD1	KT0474	7066 12 13	PSR16SXBP

060-0001-800-2	KT0474	7066 12 17	PSR18LKLT
0602 22 91	KT0475	7066 12 21	PSR18LVOLX
0602 23 10 20	KT0475	7067 04 10	PSR18LX
0602 23 11 20	KT0478	7067 06 10	PSR18LXBP
0602 23 12 20	KT0478	7067 06 13	PSR20SVOLX
0602 23 13 20	KT0479	7067 08 10	PSR20SX
0602 26 68	KT0479	7067 08 13	PSR20SXBP
0602 27 32 20	KT0480	7067 08 17	PSR22LKLT
0602 29 93 15	KT0480	707-200901	PSR22LVOLX
0602 30 60 20	KT0481	707-531101	PSR22LX
0605 12 12	KT0481	707-531108	PSR22LXBP
0610 00 14	KT0482	707-560201	PSR25SVOLX
0610 00 18	KT0482	707-570601	PSR25SX
0611 00 11	KT0483	707-610701	PSR28LKLT
0611 00 14	KT0483	707-610702	PSR28LVOLX
0611 00 18	KT0494	707-610901	PSR28LX
0611 00 22	KT0494	707-611101	PSR28LXBP
0614 00 14	KT0495	708-072-AS-E-POL	PSR30SX
0614 00 22	KT0495	7080P99956	PSR35LX
0622 26 73	KT11014	7080P99956	PSR35LXBP
0623 10 35	KT11035	7080P99959	PSR38SX
0627 00 13	KT11036	7080P99959	PSR42LX
0630 06 13	KT12006	70B102QEBPKX321	PSSCDM12A
0631 00 01	KT15002	70B102QEBPXX322	PSSCDM12A
0631 00 02	KT22003	70B102QHBPXX322	PSSCENA
0631 00 03	KT28535	70B105QBT1KX321	PSSCENA
0631 00 04	KT28535	70B110QBPKX321	PSSCPBA
0631 00 05	KT28981	70B110QEBPKX321	PSSCPBA
0631 00 06	KT28981	70B110QEBT1KX321	PSSN8M12A
0631 00 07	KT40014	70B110QEBT1NX322	PSSN8M12A
0631 00 08	KT40027	70B120QBPKX321	PSSN8M8A
0631 00 09	KT41024	70B210QBPKX321	PSSN8M8A
0631 00 23	KT41050	70B210QBPMX321F1	PSSNACM12A
0645 66 14	KU07X-4-04	70B210QEBPKX321	PSSNACM12A
0651 66 13	KU0AX-4-04	70B210QHBPXX322	PSSNAVM12A
0652 66 13	KU0NX-12-10	70B310QBPKX324	PSSNAVM12A
0653 66 13	KU0NX-20-16	70B310QEBPKX321	PSSP8M12A
0654 00 13	KU0NX-4-04	70B310QHVPXX322	PSSP8M12A
0655 66 13	KU0NX-6-06	70B402QEBPKX321	PSSP8M8A
0656 66 13	KU0NX-8-08	70B402QHBPXX322	PSSP8M8A
0657 66 13	KU0NX-8-08N	70C-I02-02	PSSSE24A
0658 66 13	KU0PX-16-12	70C-I04-02	PSSSE24A
0659 00 13	KU0PX-2-03	70C-I04-05	PSST8M12A
06-599-0C3-02	KU0PX-4-02	70C-M08F-02	PSST8M12A
06-599-0C3-02	KU0PX-4-04	70C-M10F-02	PSSTERM
0669 02 19	KU0PX-4-04C2W	70C-M10F-05	PSSTERM
0669 04 10	KU0PX-6-05	70C-M14F-02	PSSV32A
0669 07 13	KU0PX-6-06	70C-M14F-05	PSSV32A
0669 10 17	KU0PX-6-06C2W	70H8R2SD40BB50ABOO	PSSVEXT1
0669 14 21	KU0PX-8-08	70H8R2SD40BB50ABOO	PSSVEXT1
0669 19 27	KU0TX-4-025N	70H8R2TA40BB110ACAF1	PSUP10D6USBM00
0670 00 10	KU2NX-4-04	70H8R2TA40BB110ACAF1	PSUP20D6USBM00
0670 00 13	KUGE3X	70H8R2TC50BB120ACAF1X	PSV-A12

0670 00 17	KUGE4X	70H8R2TC50BB120ACAF1X	PSV-A12
0670 00 21	KUGE7.5X	70L105QBPKG161	PSV-A12-EX
0670 00 27	KV1643	70L110QBPKG161	PSV-A12-EX
0670 00 34	KV2643	70L110QBPKG201	PT12
0671 04 00	KV30801700V00	70L110QEBPKG161	PT16
0671 06 00	KV38C43	70L120QBPKG161	PT4210QBPGG164
0671 08 00	KV843	70L120QBPKG161S26	PT4210QBPGG204
0671 10 00	KV845	70L120QEBPKG161	PT4440
0671 12 00	KVE11143	70L202QHBPXG162	PT6660
0672 00 10	KVE11145	70L205QBPKG161	PT8800
0672 00 13	KVE11145Z17	70L210QBPKG161	PT8800
0672 00 17	KVE11145Z24D12	70L210QBPKG201	PT8800/SU4
0672 00 21	KVE13143Z16	70L210QBPKG241	PT8800/SU4
0673 00 10	KVNR11/4	70L210QBPKH201	PT8800/SU5
0673 00 13	KW0001	70L210QEBM3KG201	PT8800/SU5
0673 00 17	KW0001	70L210QEBPKG201	PT8800/SU6
0673 00 19	KW0002	70L210QHBPXG202	PT8800/SU6
0673 00 20	KW0002	70L210QVM3KG201	PT8802
0673 00 21	KW0003	70L220QBPKG161	PT8802
0674 00 10	KW0003	70L220QBPKG201	PT8802-SU4
0674 00 13	KW0004	70L220QBPKG201S33	PT8802-SU4
0674 00 17	KW0004	70L220QBPKG241	PT8802-SU5
0674 00 19	KW0005	70L220QEBPKG201	PT8802-SU5
0674 00 21	KW0005	70L302QHBPXG242	PT8802SU6
0674 00 27	KW0006	70L302QHBPXH242	PT8802SU6
0674 00 34	KW0006	70L310QBPKG201	PT8806
0675 00 10	KW0006	70L310QBPKG241	PT8806
0675 00 13	KW0006	70L310QBT1KH241	PT8808
0675 00 17	KW0007	70L310QEBPKG241	PT8808
0675 00 19	KW0007	70L320QBPKG241	PT8817
0675 00 21	KW0007	70L320QEBPKG241	PT8817
0675 00 55	KW0007	70L402QHBPXG242	PT8823
0676 00 10	KW0008	70L402QHBPXR242	PT8823
0676 00 13	KW0008	70L410QBPKG241	PT8825
0676 00 17	KW0009	70L410QBPKR241	PT8825
0676 00 19	KW0009	70L410QEBPKG241	PT8827
0676 00 21	KW0011	70L410QEBT1KR241	PT8827
0677 00 10	KW0011	70L420QBPKG241	PT8880
0677 00 13	KW0011	70L420QEBPKG241	PT90000002
0677 00 17	KW0011	70T110QBPKG161	PT99000006
0677 00 21	KW0012	70T110QBPKG166	PT99000014
0677 00 27	KW0012	70T110QEBPKG161	PT99000015
0677 00 34	KW0012	70T110QHBPXG162	PT99000016
0680 13 13	KW0012	70T120QBPKG161	PT99000017
0681 13 21	KW0012-V	70T120QEBPKG161	PT99000018
0682 00 10	KW0012-V	70T210QBPKG201	PT99000019
0682 00 13	KW0013	70T210QBPKG206	PT99000020
0682 00 17	KW0013	70T210QEBPKG201	PT99000021
0682 00 21	KW0013	70T210QHBPXG242	PT99000022
0682 00 27	KW0013	70T220QBPKG201	PT99000023
0682 00 34	KW0014	70T220QEBPKG201	PT99000100
0683 00 11	KW0014	70T305QHBPXG202	PT99000102
0683 00 14	KW0014	70T310QBPKG241	PT99000103

0683 00 18	KW0014	70T310QBPKH241	PT99000104
0683 00 22	KW0015	70T310QEBPKG241	PT99000105
0690 01 00	KW0015	70T310QHBPXH242	PT99000106
0690 02 00	KW0015	70T320QBPKG241	PT99000107
0690 03 00	KW0015	70T320QEBPKG241	PT99000108
0690 04 00	KW0016	70T410QBPKG241	PT99000109
0690 05 00	KW0016	70T410QEBPKG241	PT99000202
0690 06 00	KW0016	70T410QEBT1KH241	PT99900209
0690 06 01	KW0016	70T410QHBPXG242	PTA-025
0690 07 00	KW0017	70T410QHBPXH242	PTA-04
0690 08 00	KW0017	70T420QBPKG241	PTA-05
0690 09 00	KW0017	70T420QEBPKG241	PTA-06
0690 10 00	KW0017	7100 04 10	PTB-04
0690 11 00	KW0018	7100 06 10	PTB-06-06
0691 13 13	KW0018	7100 06 13	PTB-10M
069-100350	KW0018	7100 08 10	PTB113002501V
069-100560	KW0018	7100 08 13	PTB-12M
0692 09 13	KW0019	7100 08 17	PTB-4T
0694 08 13	KW0019	7100 10 13	PTB-6M
0694 10 13	KW0019	7100 10 17	PTB-6T
0694 12 17	KW0019	7100 12 17	PTB-8M
0695 08 13	KW0020	7100 12 21	PTB-8T
0695 10 13	KW0020	7100 14 21	PT-C
0695 12 17	KW0021	710008P0001	PTC-001-RB
0697 00 01	KW0021	710013P0001	PTCF1/L/35BSM
0697 00 02	KW0022	710-040100	PTCF1/S/35BSM
0697 00 03	KW0022	7101 04 10	PTCF112/L/50BSM
0697 00 04	KW0022	7101 06 10	PTCF112/S/51BSM
0697 00 05	KW0022	7101 06 13	PTCF114/L/44BSM
06D3BA	KW0023	7101 08 10	PTCF114/S/44BSM
06D3BA	KW0023	7101 08 13	PTCF12/L/22BSM
06D3NA	KW0024	7101 08 17	PTCF12/S/22BSM
06D3NA	KW0024	71-016137-10	PTCF2/L/63BSM
06F14AC	KW0025	71-016939-10	PTCF2/S/63BSM
06F14AC	KW0025	71-021599-04	PTCF212/L/76BSM
06L14BE	KW0026	71-021609-01	PTCF212/S/80BSM
06L14BE	KW0026	710281P0001	PTCF3/L/90BSM
06R118AC	KW0027	710417-10	PTCF3/S/90BSM
06R118AC	KW0027	710417-4	PTCF34/L/28BSM
06R213AC	KW0028	710417-8	PTCF34/S/28BSM
06R213AC	KW0028	710-4D0012-BE-0S-0000	PTCF38/L/18BSM
06R216AC	KW0029	710-4E0023-BE-0S-0000	PTCF38/S/18BSM
06R216AC	KW0029	710-4F0038-BE-0S-0000	PTCF4/L/114BSM
06S2MDB1	KW0030	7110 10 10	PT-CG-10M
06S2MDB1	KW0030	7110 13 13	PT-CG-12M
0703 42 82	KW0032	7110 17 17	PT-CG-12T
0703 50 52	KW0032	7110 21 21	PT-CG-16M
0703 50 62	KW0033	7110-023-0NM	PT-CG-16T
071330-0000	KW0033	7111 10 10	PT-CG-20M
073-605270	KW0034	7111 13 13	PT-CG-25M
076384-0000	KW0034	7111-023-0NE	PT-CG-4T
076385-0000	KW0035	7112-023-0EP	PT-CG-6M
076386-0000	KW0035	7112-023-0NY	PT-CG-6T

07E32A13AC	KW0036	7113-023-0N0	PT-CG-8M
07E32A13AC	KW0036	711509-1	PT-CG-8T
07F32AC1	KW0038	711509-3	PT-CS
07F32AC1	KW0038	711509-4	PT-D
07R213AC	KW0040	711509-5	PTD.VB2501B1C1
07R213AC	KW0040	71-1C32-24F	PT-DS
07R313AC1	KW0041	71-1C32-32F	PTDSB0601B1C1
07R313AC1	KW0041	71-1C32-SPK	PTDSB0601B1C2
07S349*1	KW0045	71214TN2ST00	PTDSB1001B1C1
07S349*1	KW0045	71214TN2ST00	PTDSB2501B1C1
07S349B1	KW0046	71215SN1MN00N0C111Q3	PTDSB2501B1C2
07S349B1	KW0046	71215SN1MN00N0C111Q3	PTDSB4001B1C1
07T3MDA1	KW0047	71215SN1SN00N0L111C2	PTDSB4001B1C2
07T3MDA1	KW0047	71215SN1SN00N0L111C2	PTDVB0201A1C1
0800 13 21	KW0048	71215SN2EF00-HZ09C2	PTDVB0251B1C1
0800 32 42	KW0048	71215SN2EF00-HZ09C2	PTDVB0251B1C2
0800 40 49	KW0049	71215SN2EF00N0D100C2	PTDVB0601B1C1
0800 40 49 22	KW0049	71215SN2EF00N0D100C2	PTDVB0601B1C2
0800 50 48	KW0050	71215SN2EV00M1J011C2	PTDVB1001B1C1
080-702503	KW0050	71215SN2EV00M1J011C2	PTDVB1001B1C2
080-900446	KW0050	71215SN2KF00	PTDVB4001B1C1
080-900447	KW0050	71215SN2KF00	PTDVB4001B1C2
080-900457	KW0051	71215SN2KN00-HZ96C2	PTDVB6001B1C1
082529-0100	KW0051	71215SN2KN00-HZ96C2	PTDVB6001B1C2
082529-0300	KW0052	71215SN2KV00	PTF250/20-35
082529-0500	KW0052	71215SN2KV00	PTF250/20-35
082629-0200	KW0053	71215SN2KV00N0D100P3	PTF4-1/2
085-301200	KW0053	71215SN2KV00N0D100P3	PTF4-1/4
085-301240	KW0054	71215SN2KV00-N1-DZ02A5	PTF4-1/8
085-301241	KW0054	71215SN2KV00-N1-DZ02A5	PTF4-3/8
085-301281	KW0054	71215SN2KV00-N3-D500C2	PTF4PB10-1/2
085-301304	KW0054	71215SN2KV00-N3-D500C2	PTF4PB10-1/4
085-301306	KW0054-V	71215SN2MN00	PTF4PB10-3/8
085-301312	KW0054-V	71215SN2MN00	PTF4PB12-1/2
085-301317	KW0055	71215SN2MN00N0C111P3	PTF4PB12-3/8
085-301500	KW0055	71215SN2MN00N0C111P3	PTF4PB4-1/8
085-301502	KW0055	71215SN2MV00	PTF4PB6-1/4
085-301506	KW0055	71215SN2MV00	PTF4PB6-1/8
085-301507	KW0056	71215SN2SN00	PTF4PB6-3/8
085-302310	KW0056	71215SN2SN00	PTF4PB8-1/4
0895-25-00100-0000-000000	KW0056	71215SN2VV00-N1-DZ02C2	PTF4PB8-1/8
0895-25-00100-0000-000000	KW0056	71215SN2VV00-N1-DZ02C2	PTF4PB8-3/8
0895-25-00250-0000-000000	KW0056-V	71216SN1BL00	PTF8PB4M5
0895-25-00250-0000-000000	KW0056-V	71216SN1BL00	PTF8PB6M5
0895-25-00250-2000-000000	KW0057	71216SN1FU00	PTF923001003V
0895-25-00250-2000-000000	KW0057	71216SN1FU00	PTF923002501V
0895-25-00505-0000-000000	KW0057	71216SN1FU00N0D200C2	PTF923003401V
0895-25-00505-0000-000000	KW0057	71216SN1FU00N0D200C2	PTFA4PB4-1/8
0895-25-00540-0000-000000	KW0058	71216SN1GL00	PTFA4PB6-1/4
0895-25-00540-0000-000000	KW0058	71216SN1GL00	PTFA4PB6-1/8
0895-25-00550-0000-000000	KW0059	71216SN2BL00	PTFA4PB8-1/4
0895-25-00550-0000-000000	KW0059	71216SN2BL00	PTFA4PB8-1/8
0895-25-00579-2100-000000	KW0059	71216SN2BL00N0C111Q3	PTFA8PB4M5

0895-25-00579-2100-000000	KW0059	71216SN2BL00N0C111Q3	PTFA8PB6M5
0895-25-00600-0000-000000	KW0060	71216SN2BL00N0D100C2	PTFC4PK10-1/4
0895-25-00600-0000-000000	KW0060	71216SN2BL00N0D100C2	PTFC4PK4-1/8
0895-25-00650-0000-000000	KW0061	71216SN2BL00-N1-DZ023D	PTFC4PK6-1/4
0895-25-00650-0000-000000	KW0061	71216SN2BL00-N1-DZ023D	PTFC4PK6-1/8
0895-25-00735-0000-000000	KW0062	71216SN2FU00N0H111C2	PTFC4PK8-1/8
0895-25-00735-0000-000000	KW0062	71216SN2FU00N0H111C2	PTFC8PK4-M5
0895-25-00800-0000-000000	KW0062	71221SN1MM00	PTFC8PK6-M5
0895-25-00800-0000-000000	KW0062	71221SN1MM00	PTFETAPE
0895-25-01014-0000-000000	KW0063	71221SN1MM00N0D200C2	PTFIPK10
0895-25-01014-0000-000000	KW0063	71221SN1MM00N0D200C2	PTFIPK12
0895-25-01600-0000-000000	KW0064	71225SN2KF00-N1-DZ02C2	PTFIPK4
0895-25-01600-0000-000000	KW0064	71225SN2KF00-N1-DZ02C2	PTFIPK6
0895-25-01800-0000-000000	KW0065	7125R10	PTFIPK8
0895-25-01800-0000-000000	KW0065	7125R1024	PTFIWPK4
0895-25-02200-0000-000000	KW0066	71295SN1KNJ1	PTFIWPK6
0895-25-02200-0000-000000	KW0066	71295SN1KNJ1	PTFIWPK8
0895-25-07955-0000-000000	KW0067	71295SN2KNJ1	PTFL4-1/2
0895-25-07955-0000-000000	KW0067	71295SN2KNJ1	PTFL4-1/4
08F22C2140AAFR	KW0068	71-2C16-16FE	PTFL4-1/8
08F22C2140AAFR	KW0068	71-2C16-16FSL	PTFL4-3/8
08F22C2140AAFSB05	KW0069	71-2C16-20FSL	PTFL4COB10-1/4
08F22C2140AAFSB05	KW0069	71-2N16-16F	PTFL4COB14-3/8
08F22C2240AAFR	KW0070	7130 04 10	PTFL4COB18-1/2
08F22C2240AAFR	KW0070	7130 04 19	PTFL4COB8-1/8
08F22C2640ADFPH15O	KW0072	7130 06 10	PTFL4PB10-1/2
08F22C2640ADFPH15O	KW0072	7130 06 13	PTFL4PB10-1/4
08F23O2140ACF	KW0073	7130 06 19	PTFL4PB10-3/8
08F23O2140ACF	KW0073	7130 08 10	PTFL4PB12-1/2
08F25O2132ACF4C05	KW0074	7130 08 13	PTFL4PB12-3/8
08F25O2132ACF4C05	KW0074	7130 08 17	PTFL4PB4-1/8
08KFIW21SVN	KW0075	7130 10 13	PTFL4PB6-1/4
08KFTF13SVN	KW0075	7130 10 17	PTFL4PB6-1/8
08KLIW21SVN	KW0077	7130 10 21	PTFL4PB8-1/4
08KLTF13SVN	KW0077	7130 12 17	PTFL4PB8-1/8
08SFIW21SXN	KW0079	7130 12 21	PTFL4PB8-3/8
08SFTF09SXN	KW0079	71315SN1GNJ1N0C111C2	PTFL8PB4M5
08SFTF13SXN	KW0081	71315SN1GNJ1N0C111C2	PTFL8PB6M5
08SLIW21SVN	KW0081	71315SN1GVJ1	PTFLC4PK10-3/8
08SLTF13SVN	KW0082	71315SN1GVJ1	PTFLC4PK12-1/2
0900 00 10	KW0082	71315SN1GVJ1N0C111P3	PTFLC4PK6-1/4
0900 00 13	KW0083	71315SN1GVJ1N0C111P3	PTFLC4PK6-1/8
0900 00 17	KW0083	71315SN1MN00N0C111Q3	PTFLC4PK8-1/4
0900 00 21	KW0084	71315SN1MN00N0C111Q3	PTFLC4PK8-1/8
0900 00 27	KW0084	71315SN1MV00N0C111P3	PTFLC4PK8-3/8
0900 00 34	KW0085	71315SN1MV00N0C111P3	PTFLM8PK6-M5
0900 10 13	KW0085	71315SN1MVJ1N0C111P3	PTFMIPK6
0900 10 17	KW0085	71315SN1MVJ1N0C111P3	PT-GG-12
0900 13 17	KW0085	71315SN2EN00N0C111Q3	PT-GG-16
0900 13 21	KW0087	71315SN2EN00N0C111Q3	PT-GG-4
0900 17 21	KW0087	71315SN2ENJ1N0C111P3	PT-GG-6
0900 21 27	KW0088	71315SN2ENJ1N0C111P3	PT-GG-8
0900 27 34	KW0088	71315SN2ENJ1N0HZ09C2	PTM-10M

0901 00 10	KW0089	71315SN2ENJ1N0HZ09C2	PTM-12M
0901 00 13	KW0089	71315SN2GVJ1	PTM-6M
0901 00 17	KW0090	71315SN2GVJ1	PTM-8M
0901 00 19	KW0090	71315SN2GVJ1N0H111C2	PTN060-004S7
0901 00 21	KW0091	71315SN2GVJ1N0H111C2	PTN060-008S7
0901 10 13	KW0091	71315SN2KN00	PTN060-025S7
0901 13 17	KW0091	71315SN2KN00	PTN080-004S7
0901 17 21	KW0091	71315SN2KN00N0C111Q3	PTN080-008S7
0901 19 10	KW0092	71315SN2KN00N0C111Q3	PT-V
0902 00 10	KW0092	71315SN2KNJ1	PTX.B0601A1C1
0902 00 13	KW0092	71315SN2KNJ1	PTX.B4001B1C1
0902 00 17	KW0092	71315SN2KVJ1-E0-EZ01C2	PTX.B4001B1C2
0902 00 19	KW0093	71315SN2KVJ1-E0-EZ01C2	PTXB0251B1C1
0902 00 21	KW0093	71315SN2VVJ1	PTXB0251B1C2
0902 00 27	KW0094	71315SN2VVJ1	PTXB0601B1C1
0902 10 13	KW0094	71330-150	PTXB1001B1C1
0902 10 17	KW0095	71331SN1MMS2N0C111Q3	PTXB1001B1C2
0902 13 17	KW0095	71331SN1MMS2N0C111Q3	PTXB2501B1C2
0902 13 21	KW0099	71335SN1KNJ1	PTXB4001A1C2
0902 17 21	KW0099	71335SN1KNJ1	PTXB6001B1C2
0902 19 10	KW0101	71335SN2ANJ1N0H222C2	PU 10
0902 21 27	KW0101	71335SN2ANJ1N0H222C2	PU 13
0903 10 13	KW0102	71335SN2ENJ1N0H222C2	PU 8
0903 13 17	KW0102	71335SN2ENJ1N0H222C2	PU040/025/02
0903 17 21	KW0103	71335SN2GNJ1	PU040/025/03
0903 21 27	KW0103	71335SN2GNJ1	PU040/050/02
0903 27 34	KW0104	71335SN2KNJ1	PU040/050/03
0904 10 13	KW0104	71335SN2KNJ1	PU060/025/02
0904 10 17	KW0104	71335SN2KNJ1N0C111Q3	PU060/025/03
0904 13 17	KW0104	71335SN2KNJ1N0C111Q3	PU060/050/02
0904 13 21	KW0105	71335SN2KNJ1N0H111C2	PU060/050/03
0904 17 21	KW0105	71335SN2KNJ1N0H111C2	PU060/100/02
0904 17 27	KW0106	7133KBN2GVJ1N0HZ09C2	PU060/100/03
0904 21 27	KW0106	7133KBN2GVJ1N0HZ09C2	PU08/020/DV
0905 10 13	KW0107	7133TVN2JV00	PU08/030/26
0905 10 17	KW0107	7133TVN2JV00	PU08/030/DV
0905 13 17	KW0109	71385SN2GVJ1-VZ01R5	PU08/040/DV
0905 13 21	KW0109	71385SN2GVJ1-VZ01R5	PU08/050/DV01
0905 17 21	KW0110	71385SN2MNJ1-E0-EZ010A	PU08/060/DV
0905 17 27	KW0110	71385SN2MNJ1-E0-EZ010A	PU08/075/DV
0905 19 10	KW0111	71395SN1KNJ1N0C111Q3	PU080/025/02
0905 21 27	KW0111	71395SN1KNJ1N0C111Q3	PU080/025/03
0906 00 10	KW0112	71395SN2KNJ1	PU080/050/02
0906 00 13	KW0112	71395SN2KNJ1	PU080/050/03
0906 00 17	KW0113	71395SN2KNJ1N0C111P3	PU080/100/02
0906 00 21	KW0113	71395SN2KNJ1N0C111P3	PU080/100/03
0906 10 13	KW0115	71-3C12-12F	PU10/020/DV
0906 10 17	KW0115	71-3C12-12FE	PU10/030/26
0906 10 19	KW0116	71-3C12-12FSL	PU10/030/DV
0906 13 17	KW0116	71-3C12-12FV	PU10/040/DV
0906 13 21	KW0117	71-3C12-12RP	PU10/060/26
0906 17 21	KW0117	71-3C12-SPK	PU10/060/DV
0907 00 10	KW0119	71-3C12-SPKV	PU10/060/DVS_05

0907 00 10 01	KW0119	71-3C16-16F	PU10/060/DVS_18
0907 00 13	KW0120	71-3C16-16FSL	PU10/060/DVS_19
0907 00 13 01	KW0120	71-3C16-16FV	PU10/060/DVS_22
0908 00 10	KW0121	71-3C16-16RP	PU10/075/25
0908 00 13	KW0121	71-3C16-20F	PU10/075/26
0908 00 17	KW0122	71-3C16-SPK	PU10/075/DV
0908 00 21	KW0122	71-3C16-SPKE	PU10/150/DV
0909 00 10	KW0123	71-3C16-SPKV	PU10/230
0909 00 13	KW0123	71-3C4-4F	PU10/260
0909 00 17	KW0124	71-3C4-4FSL	PU10/275
0909 00 21	KW0124	71-3C4-4RP	PU100/025/02
0910 00 10	KW0125	71-3C4-SPK	PU100/025/03
0910 00 13	KW0125	71-3C6-4F	PU10SET
0910 00 17	KW0126	71-3C6-4FSL	PU10SET-21S
0910 00 21	KW0126	71-3C6-6F	PU10SET-21S_01
091-0094-900	KW0127	71-3C6-6FSL	PU10SET-26
0911 00 10	KW0127	71-3C6-6FV	PU10SET-26S_01
0911 00 13	KW0129	71-3C6-6RP	PU10SET-26S_04
0911 00 17	KW0129	71-3C6-6RPSL	PU12/030/25PV
0911 00 21	KW0130	71-3C6-8F	PU12/030/DV
0912 00 10	KW0130	71-3C6-8FSL	PU12/040/DV
0912 00 13	KW0131	71-3C6-8FV	PU12/060/25
0912 00 17	KW0131	71-3C6-8RP	PU12/060/26
0912 00 19	KW0132	71-3C6-SPK	PU12/060/DV
0912 00 21	KW0132	71-3C6-SPKE	PU12/075/25
0912 00 27	KW0132	71-3C6-SPKV	PU12/075/26
0913 00 10	KW0132	71-3C8-8EFV	PU12/075/DV
0913 00 13	KW0133	71-3C8-8F	PU12/150/DV
0913 00 17	KW0133	71-3C8-8FSL	PU12/230
0913 00 21	KW0133	71-3C8-8RP	PU12/260
0913 00 27	KW0133	71-3C8-SPK	PU12/260/DV
0914 00 10	KW0134	71-3C8-SPKE	PU12/275
0914 00 13	KW0134	71-3C8-SPKV	PU12/275/25PV
0914 00 17	KW0141	71-3N12-12EFV	PU12/275/DV
0914 00 21	KW0141	71-3N12-12F	PU120/025/02
0914 00 27	KW0143	71-3N12-12FV	PU120/025/03
0915 00 10	KW0143	71-3N12-12RP	PU15/030/DV
0915 00 13	KW0144	71-3N12-SPK	PU15/040/DV
0915 00 17	KW0144	71-3N12-SPKV	PU15/060/DV
0915 00 19	KW0145	71-3N16-16F	PU15/075/DV
0915 00 21	KW0145	71-3N16-16FV	PU19/060/DV
0915 00 27	KW0148	71-3N16-16RP	PU19/075/DV
0916 00 10	KW0148	71-3N16-20F	PUF-004
0916 00 13	KW0149	71-3N16-SPK	PUF-006
0916 00 17	KW0149	71-3N16-SPKE	PUF-008
0916 00 21	KW0151	71-3N16-SPKV	PUG-100-NBR
0916 00 27	KW0151	71-3N4-4F	PUG-100-NBR
0917 00 10	KW0152	71-3N4-4RP	PUG-100-SI
0917 00 13	KW0152	71-3N4-SPK	PUG-100-SI
0917 00 17	KW0153	71-3N6-4F	PUG-10-NBR
0917 00 21	KW0153	71-3N6-6F	PUG-10-NBR
0917 00 27	KW0154	71-3N6-6FV	PUG-10-SI
0919 00 10	KW0154	71-3N6-6RP	PUG-10-SI

0919 00 13	KW0155	71-3N6-8F	PUG-120-NBR
0919 00 17	KW0155	71-3N6-SPK	PUG-120-NBR
0919 00 19	KW0156	71-3N6-SPKE	PUG-120-SI
0919 00 21	KW0156	71-3N6-SPKV	PUG-120-SI
0919 00 27	KW0157	71-3N8-8EFV	PUG-150-NBR
0919 00 34	KW0157	71-3N8-8F	PUG-150-NBR
0920 00 10	KW0167	71-3N8-8FE	PUG-150-SI
0920 00 13	KW0167	71-3N8-8RP	PUG-150-SI
0920 00 17	KW0168	71-3N8-SPK	PUG-15-NBR
0920 00 19	KW0168	71-3N8-SPKE	PUG-15-NBR
0920 00 21	KW0168	71-3N8-SPKV	PUG-15-SI
0921 00 19	KW0168	71-3PCC-4	PUG-15-SI
0922 00 19	KW0169	71-3PCC-6	PUG-200-NBR
0923 00 19	KW0169	71-3PNC-4	PUG-200-NBR
0924 00 19	KW0170	71-3PNC-6	PUG-200-SI
092-510410	KW0170	7140 10 10	PUG-200-SI
092-510510	KW0172	7140 13 13	PUG-20-NBR
092-510600	KW0172	7140 17 17	PUG-20-NBR
0927 00 10	KW0173	7140 19 19	PUG-20-SI
0927 00 13	KW0173	7140 21 21	PUG-20-SI
0927 00 17	KW0174	7160 04 10	PUG-25-NBR
0927 00 21	KW0174	7160 06 10	PUG-25-NBR
0928 00 10	KW0175	7160 06 13	PUG-25-SI
0928 00 13	KW0175	7160 08 10	PUG-25-SI
0928 00 17	KW0178	7160 08 13	PUG-25-U
0928 00 21	KW0178	7160 10 13	PUG-25-U
0929 00 10	KW0182	7160 10 17	PUG-30-NBR
0929 00 13	KW0182	7160 10 21	PUG-30-NBR
0929 00 17	KW0183	7160 12 17	PUG-30-NBRE
0929 00 21	KW0183	7160 12 21	PUG-30-NBRE
0929 01 10	KW0184	7170 10 10	PUG-30-SI
0929 01 13	KW0184	7170 13 13	PUG-30-SI
0929 01 17	KW0184	7170 17 17	PUG-35-NBR
0929 01 21	KW0184	7170 19 19	PUG-35-NBR
0931 06 10	KW0185	7170 21 21	PUG-35-SI
0931 06 13	KW0185	7170-103X	PUG-35-SI
0931 07 10	KW0186	7170-104X	PUG-40-NBR
0931 07 13	KW0186	7170-108X	PUG-40-NBR
0931 07 17	KW0187	7170-5X	PUG-40-NBRE
0931 08 10	KW0187	7170-74X	PUG-40-NBRE
0931 08 13	KW0188	7170-78X	PUG-40-SI
0931 08 17	KW0188	7170-86X	PUG-40-SI
0931 10 13	KW0189	717784-10	PUG-40-SIE
0931 10 17	KW0189	717909N	PUG-40-SIE
0931 10 21	KW0190	717943K	PUG-40-U
0931 15 17	KW0190	7180 04 10	PUG-40-U
0931 15 21	KW0191	7180 04 19	PUG-50-NBR
0931 18 21	KW0191	7180 06 10	PUG-50-NBR
0933 00 21	KW0192	7180 06 19	PUG-50-SI
097-590050	KW0192	7180 08 10	PUG-50-SI
097-592005	KW0193	7190 10 10	PUG-50-U
098-90025-0	KW0193	7190 19 19	PUG-50-U
098-90026-0	KW0194	71C2-2F	PUG-60-NBR

098-90043-0	KW0194	71C2-2FE	PUG-60-NBR
098-90044-0	KW0195	71C2-4F	PUG-60-SI
098-90045-0	KW0195	71KBIT10MPX	PUG-60-SI
098-90128-0	KW0196	71KBIW10DPX	PUG-80-NBR
098-90239-0	KW0196	71KBIW10EVX	PUG-80-NBR
098-90370-0	KW0197	71KBIW10MEX	PUG-80-SI
098-90418-0	KW0197	71KBIW10MPN	PUG-80-SI
098-90825-0	KW0198	71KBIW10MPX	PUGB-100-NBR
098-90873-0	KW0198	71KBIW10MVX	PUGB-100-NBR
098-90947-0	KW0200	71KBIW10REX	PUGB-100-SI
098-90950-0	KW0200	71KBIW10RVX	PUGB-100-SI
098-91001-0	KW0201	71N32-24F	PUGB-10-NBR
098-91007-0	KW0201	71N32-32F	PUGB-10-NBR
098-91012-0	KW0204	71N32-SPK	PUGB-10-SI
098-91013-0	KW0204	71SBIT10MPX	PUGB-10-SI
098-91014-0	KW0205	71SBIW10DPX	PUGB-120-NBR
098-91015-0	KW0205	71SBIW10EVX	PUGB-120-NBR
098-91016-0	KW0206	71SBIW10MEX	PUGB-120-SI
098-91017-0	KW0206	71SBIW10MPN	PUGB-120-SI
098-91018-0	KW0210	71SBIW10MPX	PUGB-150-NBR
098-91019-0	KW0210	71SBIW10MVX	PUGB-150-NBR
098-91020-0	KW0211	71SBIW10REX	PUGB-150-SI
098-91024-0	KW0211	71SBIW10RVX	PUGB-150-SI
098-91034-0	KW0216	720370B-3	PUGB-15-NBR
098-91034-4	KW0216	721FIL	PUGB-15-NBR
098-91035-0	KW0217	721FIL	PUGB-15-SI
098-91036-0	KW0217	721TC-10	PUGB-15-SI
098-91037-0	KW0221	721TC-16	PUGB-200-NBR
098-91038-0	KW0221	721TC-20	PUGB-200-NBR
098-91039-0	KW0224	721TC-24	PUGB-200-SI
098-91040-0	KW0224	721TC-32	PUGB-200-SI
098-91041-0	KW0225	721TC-6	PUGB-20-NBR
098-91042-0	KW0225	721TC-8	PUGB-20-NBR
098-91043-0	KW0226	72218BG5VV00	PUGB-20-SI
098-91048-0	KW0226	72218BG5VV00	PUGB-20-SI
098-91050-0	KW0230	72218BN4UN00A0JZ01C1	PUGB-25-NBR
098-91051-0	KW0230	72218BN4UN00A0JZ01C1	PUGB-25-NBR
098-91052-0	KW0234	72218BN4UN00N0C322C2	PUGB-25-SI
098-91053-0	KW0234	72218BN4UN00N0C322C2	PUGB-25-SI
098-91054-0	KW0239	72218BN4UV00N0C322C1	PUGB-30-NBR
098-91055-0	KW0239	72218BN4UV00N0C322C1	PUGB-30-NBR
098-91056-0	KW0241	72218BN5VN00	PUGB-30-SI
098-91057-0	KW0241	72218BN5VN00	PUGB-30-SI
098-91058-0	KW0249	72218BN5VV00	PUGB-35-NBR
098-91059-0	KW0249	72218BN5VV00	PUGB-35-NBR
098-91060-0	KW0251	72218RG4UE00	PUGB-35-SI
098-91061-0	KW0251	72218RG4UE00	PUGB-35-SI
098-91069-0	KW0261	72218RG4UES0	PUGB-40-NBR
098-91074-0	KW0261	72218RG4UES0	PUGB-40-NBR
098-91076-0	KW0262	72218RG4UV00-HZ96F4	PUGB-40-SI
098-91077-0	KW0262	72218RG4UV00-HZ96F4	PUGB-40-SI
098-91082-0	KW0263	72218RG5VE00	PUGB-50-NBR
098-91083-0	KW0263	72218RG5VE00	PUGB-50-NBR

098-91086-0	KW0264	72218RG5VE00-N1-DZ033D	PUGB-50-SI
098-91088-0	KW0264	72218RG5VE00-N1-DZ033D	PUGB-50-SI
098-91090-0	KW0265	72218RG5VV00-E0-EZ92C2	PUGB-60-NBR
098-91096-0	KW0265	72218RG5VV00-E0-EZ92C2	PUGB-60-NBR
098-91097-0	KW0266	72218RN4UV00-G1-EZ92F4	PUGB-60-SI
098-91098-0	KW0266	72218RN4UV00-G1-EZ92F4	PUGB-60-SI
098-91102-0	KW0267	72218RN5VV00-N1-DZ08F4	PUGB-80-NBR
098-91103-0	KW0267	72218RN5VV00-N1-DZ08F4	PUGB-80-NBR
098-91116-0	KW0268	7221GBN4VN00N0C322C2	PUGB-80-SI
098-91117-0	KW0268	7221GBN4VN00N0C322C2	PUGB-80-SI
098-91119-0	KW0277	7221GBN4VN00N0D100P3	PUM-004
098-91120-0	KW0277	7221GBN4VN00N0D100P3	PUTK-10-NBR
098-91122-0	KW0278	7221GBN4VN00N0L111Q3	PUTK-10-NBR
098-91123-0	KW0278	7221GBN4VN00N0L111Q3	PUTK-10-SI
098-91125-0	KW0279	7221GBN51N00N0C111Q3	PUTK-10-SI
098-91126-0	KW0279	7221GBN51N00N0C111Q3	PUTK-15-NBR
098-91127-0	KW0280	7221GBN64N00N0L222P3	PUTK-15-NBR
098-91129-0	KW0280	7221GBN64N00N0L222P3	PUTK-15-SI
098-91130-0	KW0280	7221GBN64NC0N0C111P3	PUTK-15-SI
098-91131-0	KW0280	7221GBN64NC0N0C111P3	PUTK-20-NBR
098-91132-0	KW0281	72228BG4UE00	PUTK-20-NBR
098-91133-0	KW0281	72228BG4UE00	PUTK-20-SI
098-91134-0	KW0282	72228BG4UV00	PUTK-20-SI
098-91135-0	KW0282	72228BG4UV00	PUTK-25-NBR
098-91136-0	KW0282	72228BG4UV00-E0-EZ92C2	PUTK-25-NBR
098-91137-0	KW0282	72228BG4UV00-E0-EZ92C2	PUTK-25-SI
098-91153-0	KW0284	72228BG4UV00-E0-EZ92F4	PUTK-25-SI
098-91154-0	KW0284	72228BG4UV00-E0-EZ92F4	PUTK-30-SI
098-91155-0	KW0285	72228BG4UV00-N1-DZ08C2	PUTK-30-SI
098-91163-0	KW0285	72228BG4UV00-N1-DZ08C2	PUTK-35-NBR
098-91171-0	KW0287	72228BG5VV00	PUTK-35-NBR
098-91179-0	KW0287	72228BG5VV00	PUTK-35-SI
098-91180-0	KW0289	72228BN5VV00	PUTK-35-SI
098-91182-0	KW0289	72228BN5VV00	PUTK-40-NBR
098-91183-0	KW0294	72228BN5VV00N0C322B8	PUTK-40-NBR
098-91184-0	KW0294	72228BN5VV00N0C322B8	PUTK-40-SI
098-91185-0	KW0298	722FIL	PUTK-40-SI
098-91186-0	KW0298	722FIL	PUTK-50-NBR
098-91187-0	KW0299	724FIL	PUTK-50-NBR
098-91191-0	KW0299	724FIL	PUTK-50-SI
098-91201-0	KW0300	72KBIT13EKX	PUTK-50-SI
098-91202-0	KW0300	72KBIT13MPX	PUTYK-100-NBR-G1
098-91202-5	KW0300	72KBIW13DEX	PUTYK-100-NBR-G1
098-91203-0	KW0300	72KBIW13DPX	PUTYK-100-SI-G1
098-91204-0	KW0301	72KBIW13EEX	PUTYK-100-SI-G1
098-91205-0	KW0301	72KBIW13EPX	PUTYK-120-NBR-G1
098-91206-0	KW0301	72KBIW13EVX	PUTYK-120-NBR-G1
098-91207-0	KW0301	72KBIW13MEN	PUTYK-120-SI-G1
098-91208-0	KW0302	72KBIW13MEX	PUTYK-120-SI-G1
098-91209-0	KW0302	72KBIW13MNX	PUTYK-150-NBR-G1
098-91210-0	KW0303	72KBIW13MPN	PUTYK-150-NBR-G1
098-91211-0	KW0303	72KBIW13MPX	PUTYK-150-SI-G1
098-91212-0	KW0304	72KBIW13MVN	PUTYK-150-SI-G1

098-91213-0	KW0304	72KBIW13MVX	PUTYK-200-NBR-G2
098-91214-0	KW0305	72KBIW13REX	PUTYK-200-NBR-G2
098-91215-0	KW0305	72KBIW13RKX	PUTYK-200-SI-G2
098-91219-0	KW0306	72KBIW13RKXS_01	PUTYK-200-SI-G2
098-91220-0	KW0306	72KBIW13RVX	PUTYK-60-NBR-G1
098-91221-0	KW0307	72KFIW13MPX	PUTYK-60-NBR-G1
098-91223-0	KW0307	72KFIW13MVX	PUTYK-60-SI-G1
098-91224-0	KW0308	72SBIT13EKX	PUTYK-60-SI-G1
098-91233-0	KW0308	72SBIT13MPX	PUTYK-80-NBR-G1
098-91234-0	KW0308	72SBIW13DEX	PUTYK-80-NBR-G1
098-91248-0	KW0308	72SBIW13DPX	PUTYK-80-SI-G1
098-91256-0	KW0309	72SBIW13EEX	PUTYK-80-SI-G1
098-91262-0	KW0309	72SBIW13EPX	PUTYS10030NBRG1
098-91264-0	KW0309	72SBIW13EVX	PUTYS10030NBRG1
098-91267-0	KW0309	72SBIW13MEX	PUTYS4030NBR
098-91268-0	KW0310	72SBIW13MKNS	PUTYS4030NBR
098-91270-0	KW0310	72SBIW13MPN	PUTYS5030NBR
098-91271-0	KW0312	72SBIW13MPX	PUTYS5030NBR
098-91280-0	KW0312	72SBIW13MVN	PUTYS8030NBRG1
098-91282-0	KW0323	72SBIW13MVX	PUTYS8030NBRG1
098-91285-0	KW0323	72SBIW13REX	PUYK-10-NBR
098-91286-0	KW0326	72SBIW13RKX	PUYK-10-NBR
098-91289-0	KW0326	72SBIW13RKXS_01	PUYK-10-SI
098-91298-0	KW0327	72SBIW13RVX	PUYK-10-SI
098-91299-0	KW0327	72SFIW13MXX	PUYK-15-NBR
098-91300-0	KW0328	7300 04 10	PUYK-15-NBR
098-91301-0	KW0328	7300 06 10	PUYK-15-SI
098-91302-0	KW0329	7300 06 13	PUYK-15-SI
098-91303-0	KW0329	7300 08 10	PUYK-20-NBR
098-91304-0	KW0329	7300 08 13	PUYK-20-NBR
098-91310-0	KW0329	7300 08 17	PUYK-20-SI
098-91320-0	KW0330	7300 10 13	PUYK-20-SI
098-91334-0	KW0330	7300 10 17	PUYK-25-NBR
098-91344-0	KW0330	731000FH30	PUYK-25-NBR
098-91352-0	KW0330	731000FH32430	PUYK-25-SI
098-91354-0	KW0331	731-12	PUYK-25-SI
098-91357-0	KW0331	731-16	PUYK-30-NBR
098-91368-0	KW0331	731-20	PUYK-30-NBR
098-91369-0	KW0331	731-24	PUYK-30-SI
098-91386-0	KW0332	731-32	PUYK-30-SI
098-91387-0	KW0332	7316 06 00	PUYK-35-NBR
098-91389-0	KW0333	7316 08 00	PUYK-35-NBR
098-91390-0	KW0333	7316 10 00	PUYK-35-SI
098-91391-0	KW0334	7318 06 10	PUYK-35-SI
098-91393-0	KW0334	7318 06 13	PUYK-40-NBR
098-91394-0	KW0335	7318 08 13	PUYK-40-NBR
098-91395-0	KW0335	7318 10 13	PUYK-40-SI
098-91396-0	KW0336	7318 10 17	PUYK-40-SI
098-91397-0	KW0336	731TC-16	PUYK-50-NBR
098-91398-0	KW0337	731TC-20	PUYK-50-NBR
098-91402-0	KW0337	731TC-24	PUYK-50-SI
098-91419-0	KW0338	73212BN2MN00N0D100C2	PUYK-50-SI
098-91422-0	KW0338	73212BN2MN00N0D100C2	PV016L1K1T1NMFC

098-91423-0	KW0339	73212BN4TN00N0C111C2	PV016L1K1T1NMFZ
098-91424-0	KW0339	73212BN4TN00N0C111C2	PV016L1K1T1NMMC
098-91447-0	KW0340	73212BN4TN00N0C111P3	PV016L1L1T1NMMC
098-91448-0	KW0340	73212BN4TN00N0C111P3	PV016L9K1T1NMMCK0076
098-91449-0	KW0342	73212BN4TN00N0D100C2	PV016R1D1T1NMMC
098-91450-0	KW0342	73212BN4TN00N0D100C2	PV016R1E1T1NMFZ
098-91453-0	KW0346	73212BN4TN00N0H111C2	PV016R1K1A1NCCC
098-91454-0	KW0346	73212BN4TN00N0H111C2	PV016R1K1A1NDCC
098-91455-0	KW0347	73212BN4TNLVN0C322C2	PV016R1K1A1NECC
098-91456-0	KW0347	73212BN4TNLVN0C322C2	PV016R1K1A1NMFC
098-91461-0	KW0347	73212BN63N00N0C111P3	PV016R1K1A1NMFZ
098-91462-0	KW0347	73212BN63N00N0C111P3	PV016R1K1A1NMMC
098-91466-0	KW0348	73212SN2MN00N0C111C2	PV016R1K1A1NMRC
098-91467-0	KW0348	73212SN2MN00N0C111C2	PV016R1K1AYN100
098-91474-0	KW0348	73216BN2MT00N0C111Q3	PV016R1K1AYNFPV
098-91475-0	KW0348	73216BN2MT00N0C111Q3	PV016R1K1AYNMF1
098-91476-0	KW0349	73218BG4UTS0	PV016R1K1AYNMFC
098-91478-0	KW0349	73218BG4UTS0	PV016R1K1AYNMMC
098-91479-0	KW0349	73218BG4UTS0-E0-EZ92A7	PV016R1K1AYNMMCX5889
098-91480-0	KW0349	73218BG4UTS0-E0-EZ92A7	PV016R1K1AYNMMCX5899
098-91482-0	KW0350	73218BN4UN00	PV016R1K1AYNMMW
098-91483-0	KW0350	73218BN4UN00	PV016R1K1AYNMMZ
098-91486-0	KW0350	73218BN4UN00N0D100B2	PV016R1K1AYNMR1
098-91488-0	KW0350	73218BN4UN00N0D100B2	PV016R1K1AYNMRC
099-001002	KW0351	73218BN4UNLVN0C111C2	PV016R1K1AYNMRZ
099-001031	KW0351	73218BN4UNLVN0C111C2	PV016R1K1AYVMMC
099-0051-900	KW0351	73218BN4UNLVN0H111C2	PV016R1K1JHNMM1
099-0075-900	KW0351	73218BN4UNLVN0H111C2	PV016R1K1JHNMMC
099-0080-900	KW0352	73218BN64N00	PV016R1K1JHNMMW
099-0107-900	KW0352	73218BN64N00	PV016R1K1T1N001
099-0135-900	KW0352	73225-.5	PV016R1K1T1N100
099-0167-900	KW0352	7329700-125V	PV016R1K1T1NBC1
099-0340-900	KW0354	7329700-12V	PV016R1K1T1NBCC
099-0353-900	KW0354	7329700-205V	PV016R1K1T1NBLC
099-0402-900	KW0355	7329700-24V	PV016R1K1T1NCCC
099-90017-0	KW0355	7329700-98V	PV016R1K1T1NCL1
09L84BA1	KW0356	732FIL	PV016R1K1T1NCLC
09L84BA1	KW0356	732FIL	PV016R1K1T1NDC1
09L8PBA	KW0357	73310:4079780	PV016R1K1T1NDL1
09L8PBA	KW0357	73310:4115825	PV016R1K1T1NDLC
09L8PBA1	KW0362	73310:4119327	PV016R1K1T1NDLW
09L8PBA1	KW0362	73312BN4UNJ1-HZ96C2	PV016R1K1T1NDLZ
0K3XCA14GEANGPNW	KW0363	73312BN4UNJ1-HZ96C2	PV016R1K1T1NECB
0K3XCA14GEANGPNW	KW0363	73312BN52NJ0	PV016R1K1T1NECC
0K3XEA14GGABNGN	KW0364	73312BN52NJ0	PV016R1K1T1NEL1
0K3XEA14GGABNGN	KW0364	73312BN52NJ0N0D500C2	PV016R1K1T1NELC
0K3XEA14GGCBNGN	KW0365	73312BN52NJ0N0D500C2	PV016R1K1T1NELW
0K3XEA14GGCBNGN	KW0365	73312BN52NJ0-N3-D500C2	PV016R1K1T1NFPV
0K3XFA14AGCN	KW0366	73312BN52NJ0-N3-D500C2	PV016R1K1T1NGCC
0K3XFA14AGCN	KW0366	73312BN52NJ1	PV016R1K1T1NGLC
0K3XFA14DGCN	KW0367	73312BN52NJ1	PV016R1K1T1NHLC
0K3XFA14DGCN	KW0367	73317BN2PN00NKHZ03C2	PV016R1K1T1NMF1
0K3XFA14GGAN	KW0368	73317BN2PN00NKHZ03C2	PV016R1K1T1NMFC

0K3XFA14GGAN	KW0368	73317BN2PN00NKHZ04C2	PV016R1K1T1NMFK
0K3XFA14GGCN	KW0368	73317BN2PN00NKHZ04C2	PV016R1K1T1NMFW
0K3XFA14GGCN	KW0368	73317BN2PN9CNK0890N7	PV016R1K1T1NMFZ
0K3XKA00MW	KW0369	73317BN2PN9CNK0890N7	PV016R1K1T1NMM1
0K3XKA00MW	KW0369	73317BN2PZ01NKHZ04C2	PV016R1K1T1NMMC
0K3XLA14PGNN	KW0369	73317BN2PZ01NKHZ04C2	PV016R1K1T1NMMCX5889
0K3XLA14PGNN	KW0369	73317BN4UN00NKHZ03C2	PV016R1K1T1NMMK
0K3XMA1V0N	KW0370	73317BN4UN00NKHZ03C2	PV016R1K1T1NMMW
0K3XMA1V0N	KW0370	73317BN4UN00NKHZ04C2	PV016R1K1T1NMMZ
0K3XRA14BNGN	KW0371	73317BN4UN00NKHZ04C2	PV016R1K1T1NMR1
0K3XRA14BNGN	KW0371	73317VN2PN00NKHZ04C2	PV016R1K1T1NMRC
0K3XVA14LSN	KW0372	73317VN2PN00NKHZ04C2	PV016R1K1T1NMRK
0K3XVA14LSN	KW0372	73340:4119870	PV016R1K1T1NMRW
0R25B	KW0373	73340:4120994	PV016R1K1T1NMRZ
0R25B	KW0373	73350:4108283	PV016R1K1T1NMTP
0R37B	KW0373	73382BN4UNJ1-N1-DZ02C5	PV016R1K1T1NUPM
0R37B	KW0373	73382BN4UNJ1-N1-DZ02C5	PV016R1K1T1VMMC
0R50B	KW0374	73417BKDPN00NKHZ03C2	PV016R1K1T1VMMW
0R50B	KW0374	73417BKDPN00NKHZ03C2	PV016R1K1T1VMR1
0R75B	KW0374	73417BKDPN00NKHZ04C2	PV016R1K1T1VMRC
0R75B	KW0374	73417BKDPN00NKHZ04C2	PV016R1K1T1WMMC
0RB12B	KW0375	73417BKDPN7ANKHZ04C2	PV016R1K8T1NMMC
0RB12B	KW0375	73417BKDPN7ANKHZ04C2	PV016R1L1A1NMMC
0RB50B	KW0375	73417BKDPN9CNK0890N7	PV016R1L1H1NMMZ
0RB50B	KW0375	73417BKDPN9CNK0890N7	PV016R1L1T1N001
0Z3LCA12PESNGLNW	KW0376	73417BKEPN00NKHZ03C2	PV016R1L1T1NDL1
0Z3LCA12PESNGLNW	KW0376	73417BKEPN00NKHZ03C2	PV016R1L1T1NMF1
0Z3LEA12EPSBNGP	KW0377	73417BKEPN9CNK0890N7	PV016R1L1T1NMFC
0Z3LEA12EPSBNGP	KW0377	73417BKEPN9CNK0890N7	PV016R1L1T1NMM1
0Z3LKA00BPN	KW0378	73417BN2PN00NKHZ03C2	PV016R1L1T1NMMC
0Z3LKA00BPN	KW0378	73417BN2PN00NKHZ03C2	PV016R1L1T1NMMK
0Z3LKA00BPS	KW0378	73417BN2PN00NKHZ04C2	PV016R1L1T1NMMW
0Z3LKA00BPS	KW0378	73417BN2PN00NKHZ04C2	PV016R1L1T1NMMZ
0Z3LKA00CB1	KW0379	73417BN2PN9CNK0890N7	PV016R1L1T1NMR1
0Z3LKA00CB1	KW0379	73417BN2PN9CNK0890N7	PV016R1L1T1NMRC
0Z3LKA00ESE	KW0380	73417BN2PNCPNKHZ04C2	PV016R1L1T1NMRK
0Z3LKA00ESE	KW0380	73417BN2PNCPNKHZ04C2	PV016R9K1AYNMMCK0001
0Z3LKA00MW	KW0380	73417BN4UN00NKHZ03C2	PV016R9K1T1N100K0001
0Z3LKA00MW	KW0380	73417BN4UN00NKHZ03C2	PV016R9K1T1NMFCK0065
0Z3LLA12LPNN	KW0381	73417BN4UN00NKHZ04C2	PV016R9K1T1NMMCK0001
0Z3LLA12LPNN	KW0381	73417BN4UN00NKHZ04C2	PV016R9K1T1NMMCK0075
0Z3LRA12BNGP	KW0382	73419AN2NN00N0C111C2	PV016R9K1T1NMMCK0134
0Z3LRA12BNGP	KW0382	73419AN2NN00N0C111C2	PV016R9K1T1NMMCK0188
0Z3XCA14GECNJPNW	KW0383	73419AN2NN00N0C111P3	PV016R9K1T1NMRCK0057
0Z3XCA14GECNJPNW	KW0383	73419AN2NN00N0C111P3	PV016R9K1T1VMMCK0075
0Z3XEA14EGCBNJN	KW0391	73419AN2NN00-VZ01C2	PV016R9K1T1WMMCK0065
0Z3XEA14EGCBNJN	KW0391	73419AN2NN00-VZ01C2	PV020R1D1T1NMFC
0Z3XLA14PGNN	KW0392	73419AN2NNM0N0H111C2	PV020R1D1T1NMMC
0Z3XLA14PGNN	KW0392	73419AN2NNM0N0H111C2	PV020R1D1T1VMMC
0Z3XRA14BNJN	KW0393	73477BKDPN00NKHZ04C2	PV020R1E1AYNMFC
0Z3XRA14BNJN	KW0393	73477BKDPN00NKHZ04C2	PV020R1E1BCNMFC
1 1/16X12 UNF-2B	KW0393	73477BKEPN00NKHZ03C2	PV020R1E1T1NMFC
1 1/2 CD-S	KW0393	73477BKEPN00NKHZ03C2	PV020R1E1T1NMMC

1 1/2 CR-S	KW0394	73477BN2PN00NKHZ04C2	PV020R1E3T1NMMZ
1 1/2 DD-S	KW0394	73477BN2PN00NKHZ04C2	PV020R1K1A1NMMC
1 1/2 FF-S	KW0394	734FIL	PV020R1K1AYNMMC
1 1/2 GG-S	KW0394	734FIL	PV020R1K1AYNMRC
1 1/2 HHP-S	KW0395	735FIL	PV020R1K1AYNMRZ
1 1/2 HP-S	KW0395	735FIL	PV020R1K1JHNMMC
1 1/2 MMO-S	KW0396	736FIL	PV020R1K1T1N001
1 1/2 MMO-SS	KW0396	736FIL	PV020R1K1T1N100
1 1/2 X 1 1/4 PTR-S	KW0397	7372F	PV020R1K1T1NBLC
1 1/2 X 1 PTR-S	KW0397	738FIL	PV020R1K1T1NBLZ
1 1/2 X 3/4 PTR-S	KW0398	738FIL	PV020R1K1T1NCLC
1 1/4 CD45-S	KW0398	73KBIW17DEX	PV020R1K1T1NDL1
1 1/4 CD-S	KW0399	73KBIW17DEXS	PV020R1K1T1NDLC
1 1/4 CR-S	KW0399	73KBIW17DPX	PV020R1K1T1NDLW
1 1/4 DD-S	KW0399	73KBIW17DVX	PV020R1K1T1NELC
1 1/4 FF-S	KW0399	73KBIW17EEXS	PV020R1K1T1NFPV
1 1/4 GG-S	KW0400	73KBIW17EVX	PV020R1K1T1NGCCX5963K0304
1 1/4 HHP-S	KW0400	73KBIW17MEX	PV020R1K1T1NGL1
1 1/4 HP-S	KW0401	73KBIW17MPN	PV020R1K1T1NGLC
1 1/4 MMO-S	KW0401	73KBIW17MPX	PV020R1K1T1NHL1
1 1/4 X 1 FF-S	KW0401	73KBIW17MVN	PV020R1K1T1NKLC
1 1/4 X 1 FG-S	KW0401	73KBIW17MVX	PV020R1K1T1NMF1
1 1/4 X 1 PTR-S	KW0402	73KBIW17REX	PV020R1K1T1NMFC
1 1/4 X 1/2 PTR-S	KW0402	73KBIW17RKXS	PV020R1K1T1NMFK
1 1/4 X 3/4 PTR-S	KW0402	73KBIW17RVX	PV020R1K1T1NMM1
1 1/4-20F4OHG5S	KW0402	73KFIW17EVX	PV020R1K1T1NMMC
1 3/16X12 UNF-2B	KW0411	73KFIW17MEX	PV020R1K1T1NMMK
1 5/16X12 UNF-2B	KW0411	73KFIW17MPX	PV020R1K1T1NMMW
1 5/8X12 UNF-2B	KW0411	73KFIW17RVX	PV020R1K1T1NMMZ
1 7/8X12 UNF-2B	KW0411	73P1Z012N0LZ19C1	PV020R1K1T1NMR1
1 BZ-B	KW0412	73P1Z012N0LZ19C1	PV020R1K1T1NMRC
1 BZI-SS	KW0412	73SBIT17MPX	PV020R1K1T1NMRZ
1 BZ-SS	KW0413	73SBIW17DEX	PV020R1K1T1NMTK
1 CD45-S	KW0413	73SBIW17DEXS	PV020R1K1T1NUPM
1 CD-S	KW0413	73SBIW17DPX	PV020R1K1T1NUPR
1 CD-SS	KW0413	73SBIW17DVX	PV020R1K1T1NUPS
1 CR-S	KW0414	73SBIW17EEXS	PV020R1K1T1VDLC
1 CR-SS	KW0414	73SBIW17EVX	PV020R1K1T1VFPV
1 DD45-S	KW0414	73SBIW17MEN	PV020R1K1T1VMM1
1 DD-S	KW0414	73SBIW17MEX	PV020R1K1T1VMMC
1 DD-SS	KW0415	73SBIW17MPN	PV020R1K1T1VMMW
1 FF-S	KW0415	73SBIW17MPX	PV020R1K1T1VMRC
1 FG-S	KW0415	73SBIW17MVN	PV020R1K1T1WMMC
1 FNZ-SS	KW0415	73SBIW17MVX	PV020R1K1T1WUPS
1 GG-S	KW0416	73SBIW17REX	PV020R1K8T1NMMC
1 HHP-S	KW0416	73SBIW17RKX	PV020R1L1T1NMFC
1 HP-S	KW0417	73SBIW17RKXS	PV020R1L1T1NMMC
1 KMMOO-S	KW0417	73SBIW17RVX	PV020R1L1T1NMMW
1 MMO-S	KW0417	73SFIW17DXX	PV020R1L1T1NMMZ
1 MMO-SS	KW0417	73SFIW17EXX	PV020R1L1T1NMR1
1 MMS-S	KW0418	73SFIW17MXX	PV020R1L1T1V100
1 MRO-S	KW0418	73SFIW17RXX	PV020R9K1A1NMMCK0137
1 MRO-SS	KW0419	74075G	PV020R9K1T1NMFCK0021

1 PHH-SS	KW0419	7416 10 10	PV020R9K1T1NMRCK0057
1 PH-SS	KW0419	7416 13 13	PV023L1E1AYN001
1 PNBZ-SS	KW0419	7416 17 17	PV023L1K1T1NMFC
1 TZ-B	KW0420	7416 21 21	PV023L1K1T1NMMC
1 TZ-SS	KW0420	74232BN52NJ1N0D100C2	PV023R1D1T1NMMC
1 TZ-T	KW0420	74232BN52NJ1N0D100C2	PV023R1D1T1NUPR
1 X 1/2 FG-S	KW0420	74317BN2PN00	PV023R1D3T1NMMW
1 X 1/2 PTR-S	KW0422	74317BN2PN00	PV023R1E1T1NMFC
1 X 3/4 FF-S	KW0422	74317BN2PN00-HZ95C2	PV023R1E1T1NUPR
1 X 3/4 FG-S	KW0423	74317BN2PN00-HZ95C2	PV023R1K1A1NECC
1 X 3/4 GG-S	KW0423	74317BN2PN00NKHZ03C2	PV023R1K1A1NGCC
1 X 3/4 PTR-S	KW0424	74317BN2PN00NKHZ03C2	PV023R1K1A1NMMC
1 X 3/8 PTR-S	KW0424	74317BN2PN00NKHZ04C2	PV023R1K1AYNMFC
1.502FLP90.50	KW0424	74317BN2PN00NKHZ04C2	PV023R1K1AYNMMC
1.502FLP90.50	KW0424	74317BN2PZ02NKHZ04C2	PV023R1K1AYNMMW
1/16 HHP-S	KW0425	74317BN2PZ02NKHZ04C2	PV023R1K1AYNMR1
1/16 HHP-S BP	KW0425	74317BN4UN00NKHZ04C2	PV023R1K1AYNMRC
1/2 CD45-S	KW0425	74317BN4UN00NKHZ04C2	PV023R1K1AYNMRZ
1/2 CD45-SS	KW0425	74317BN4UN9C49591002N7	PV023R1K1AYWMMW
1/2 CD-S	KW0426	74317BN4UN9C49591002N7	PV023R1K1G1NMMW
1/2 CD-SS	KW0426	743FIL	PV023R1K1JHNMF1
1/2 CR-S	KW0426	743FIL	PV023R1K1JHNMFC
1/2 CR-SS	KW0426	74417BKDPN00NKHZ04C2	PV023R1K1T1N001
1/2 DD45-S	KW0427	74417BKDPN00NKHZ04C2	PV023R1K1T1N100
1/2 DD-S	KW0427	7441N	PV023R1K1T1NBLC
1/2 DD-SS	KW0427	745FIL	PV023R1K1T1NCCC
1/2 FF-B	KW0427	745FIL	PV023R1K1T1NCLC
1/2 FF-S	KW0428	746FIL	PV023R1K1T1NDCC
1/2 FG-S	KW0428	746FIL	PV023R1K1T1NDL1
1/2 GG-S	KW0428	7471 10 10	PV023R1K1T1NDLC
1/2 GG-SS	KW0428	7471 13 13	PV023R1K1T1NDLW
1/2 HHP-S	KW0429	7471 17 17	PV023R1K1T1NECC
1/2 HHP-SS	KW0429	7471 21 21	PV023R1K1T1NEL1
1/2 HP-S	KW0429	747FIL	PV023R1K1T1NELC
1/2 KMMOO-S	KW0429	747FIL	PV023R1K1T1NELK
1/2 KMMOO-SS	KW0430	748FIL	PV023R1K1T1NELZ
1/2 MMO-S	KW0430	748FIL	PV023R1K1T1NFPV
1/2 MMO-SS	KW0431	74C10-12EF	PV023R1K1T1NGCC
1/2 MMS-S	KW0431	74C12-12F	PV023R1K1T1NGL1
1/2 MRO-S	KW0432	74C16-16F	PV023R1K1T1NGLC
1/2 MRO-SS	KW0432	74C4-4F	PV023R1K1T1NGLW
1/2 RRS-S	KW0433	74C6-6F	PV023R1K1T1NHLC
1/2 RRS-SS	KW0433	74C6-8F	PV023R1K1T1NHLW
1/2 X 1/4 FF-S	KW0434	74C8-8F	PV023R1K1T1NMF1
1/2 X 1/4 FG-S	KW0434	74KBIW21DEX	PV023R1K1T1NMFC
1/2 X 1/4 GG-S	KW0435	74KBIW21DPX	PV023R1K1T1NMFK
1/2 X 1/4 GG-SS	KW0435	74KBIW21DVX	PV023R1K1T1NMFW
1/2 X 1/4 PTR-B	KW0439	74KBIW21EEX	PV023R1K1T1NMM1
1/2 X 1/4 PTR-S	KW0439	74KBIW21EEXS	PV023R1K1T1NMM1X5830
1/2 X 1/8 FG-S	KW0440	74KBIW21EKX	PV023R1K1T1NMMC
1/2 X 1/8 PTR-S	KW0440	74KBIW21EVX	PV023R1K1T1NMMK
1/2 X 3.0 FFF-S	KW0442	74KBIW21MEN	PV023R1K1T1NMMW
1/2 X 3/4 CD-S	KW0442	74KBIW21MEX	PV023R1K1T1NMMZ

1/2 X 3/8 CD-S	KW0443	74KBIW21MEXS	PV023R1K1T1NMR1
1/2 X 3/8 CR-S	KW0443	74KBIW21MKX	PV023R1K1T1NMRC
1/2 X 3/8 FF-S	KW0444	74KBIW21MKXS	PV023R1K1T1NMRZ
1/2 X 3/8 FG-S	KW0444	74KBIW21MPN	PV023R1K1T1NMT1
1/2 X 3/8 GG-S	KW0447	74KBIW21MPX	PV023R1K1T1NMTP
1/2 X 3/8 PTR-S	KW0447	74KBIW21MVN	PV023R1K1T1NUPM
1/2-10F4OHG5S	KW0460	74KBIW21MVX	PV023R1K1T1NUPR
1/2BSPBUWS	KW0460	74KBIW21REX	PV023R1K1T1VMFW
1/2BSPBUWSS	KW0460	74KBIW21RKX	PV023R1K1T1VMMC
1/2CD43B	KW0460	74KBIW21RVX	PV023R1K1T1WMFC
1/2CD43BL	KW0461	74KFIW21EEX	PV023R1K1T1WMMC
1/2CR33BL	KW0461	74KFIW21MEX	PV023R1K1T1WMRC
1/2DD44B	KW0462	74KFIW21MPX	PV023R1L1JHNFPV
1/2DD44BKTL	KW0462	74KFIW21RVX	PV023R1L1T1NCLC
1/2DD44BL	KW0463	74N10-12EF	PV023R1L1T1NFPV
1/2FF33B	KW0463	74N12-12F	PV023R1L1T1NMF1
1/2FF33BL	KW0464	74N16-16F	PV023R1L1T1NMFC
1/2FF33MS	KW0464	74N4-4F	PV023R1L1T1NMM1
1/2FF33MSS	KW0465	74N6-6F	PV023R1L1T1NMMC
1/2FF44B	KW0465	74N6-6RP	PV023R1L1T1NMML
1/2FF44BL	KW0467	74N6-8F	PV023R1L1T1NMMZ
1/2FF633BL	KW0467	74N6-8RP	PV023R1L1T1NMR1
1/2FFMS	KW0468	74N8-8F	PV023R9K1AYWMM1X5918K0189
1/2FFMSS	KW0468	74PDC-12	PV023R9K1T1NDCCK0052
1/2FG43BL	KW0469	74PDC-16	PV023R9K1T1NDLCK0037
1/2FG44BL	KW0469	74PDC-4	PV023R9K1T1NDLWK0125
1/2FGMSS	KW0469	74PDC-6	PV023R9K1T1NECCK0412
1/2FHG4-B	KW0469	74PDC-8	PV028L1K1T1NHCC
1/2FN4BL	KW0470	74SBIT21DPX	PV028L1K1T1NMFW
1/2GG44B	KW0470	74SBIT21DXXS	PV028L9K1T1NMMCK0042
1/2GG44BL	KW0470	74SBIT21MPX	PV028R1D1T1NMMC
1/2GG44MS	KW0470	74SBIW21DEX	PV028R1D1T1NMMCX5899
1/2GG44MSS	KW0471	74SBIW21DPX	PV028R1E1T1NFPV
1/2HHP3B	KW0471	74SBIW21DVX	PV028R1E1T1NMFC
1/2HHP3BL	KW0472	74SBIW21DXXS	PV028R1K1A1NMMC
1/2HP3B	KW0472	74SBIW21EEX	PV028R1K1AYNCLC
1/2HP3MS	KW0473	74SBIW21EEXS	PV028R1K1AYNMF1
1/2HP3MSS	KW0473	74SBIW21EKX	PV028R1K1AYNMMC
1/2HPMSS	KW0474	74SBIW21EVX	PV028R1K1AYNMRC
1/2KMMOO4BL	KW0474	74SBIW21EXXS	PV028R1K1JHNMMC
1/2KMRO4434BL	KW0475	74SBIW21MEN	PV028R1K1T1N001
1/2L4NMS	KW0475	74SBIW21MEX	PV028R1K1T1N001X5830
1/2L4NMSS	KW0476	74SBIW21MEXS	PV028R1K1T1N100
1/2MMO444B	KW0476	74SBIW21MKX	PV028R1K1T1NBLC
1/2MMO444BL	KW0477	74SBIW21MKXS	PV028R1K1T1NCCC
1/2MMO444MS	KW0477	74SBIW21MPN	PV028R1K1T1NCL1
1/2MMO444MSS	KW0477	74SBIW21MPX	PV028R1K1T1NCLC
1/2MMS443BL	KW0477	74SBIW21MVN	PV028R1K1T1NDLC
1/2MRO434B	KW0478	74SBIW21MVX	PV028R1K1T1NDLCX5912
1/2MRO434BL	KW0478	74SBIW21REX	PV028R1K1T1NECC
1/2MRS433BL	KW0479	74SBIW21RKX	PV028R1K1T1NEL1
1/2P40NBL	KW0479	74SBIW21RVX	PV028R1K1T1NELC
1/2P4UNBL	KW0479	74SBIW21RXXS	PV028R1K1T1NELCX5910

1/2RRD	KW0479	74SFIW21MXX	PV028R1K1T1NELCX5926
1/2RRO334BL	KW0480	74SFIW21RXX	PV028R1K1T1NELW
1/2RRP	KW0480	75/B32009-10	PV028R1K1T1NFPV
1/2RRS333BL	KW0481	75/B32009-30	PV028R1K1T1NGCC
1/2WGG44B	KW0481	75/B32016-30	PV028R1K1T1NGL1
1/2WGG44BL	KW0483	750 RF	PV028R1K1T1NGLC
1/2X1/2F3HGS	KW0483	750 RF	PV028R1K1T1NHCC
1/2X1/2F4OHGS	KW0484	7500-PSEP	PV028R1K1T1NHLC
1/2X1/4 GG-SS	KW0484	7500-PSEP	PV028R1K1T1NKL1
1/2X1/4FF33MS	KW0485	7500-PSN	PV028R1K1T1NKLC
1/2X1/4FF33MSS	KW0485	7500-PSN	PV028R1K1T1NKLW
1/2X1/4FFMSS	KW0486	7500-PSV	PV028R1K1T1NMF1
1/2X1/4FG43B	KW0486	7500-PSV	PV028R1K1T1NMFC
1/2X1/4FG43BL	KW0487	75013-55	PV028R1K1T1NMM1
1/2X1/4FG44BL	KW0487	750-455	PV028R1K1T1NMMC
1/2X1/4FGMSS	KW0490	750-555	PV028R1K1T1NMMCX5830
1/2X1/4PTR34B	KW0490	750-QC	PV028R1K1T1NMMK
1/2X1/4PTR34BL	KW0491	750-QC	PV028R1K1T1NMMW
1/2X1/4PTR34MS	KW0491	7510 RV	PV028R1K1T1NMMZ
1/2X1/4PTR34MSS	KW0503	7510 RV	PV028R1K1T1NMR1
1/2X1/4PTR44BL	KW0503	7510 RVUV	PV028R1K1T1NMRC
1/2X1/4PTR44MSS	KW0505	7510 RVUV	PV028R1K1T1NMRZ
1/2X1/4PTRMSS	KW0505	7510 UV	PV028R1K1T1NMT2
1/2X1/8FFMSS	KW0506	7510 UV	PV028R1K1T1NMT2X5939
1/2X1/8FGMSS	KW0506	7510 V	PV028R1K1T1WMM1
1/2X1/8PTR34BL	KW0507	7510 V	PV028R1K1T1WMMW
1/2X1/8PTR44BL	KW0507	7510 VUV	PV028R1K1T1WMRC
1/2X1/8PTRMSS	KW0509	7510 VUV	PV028R1L1JHNDCC
1/2X1GG44BL	KW0509	751000FHX10	PV028R1L1T1NDCC
1/2X20 UNF-2B	KW0510	751000FHX2	PV028R1L1T1NEL1
1/2X3.0FFFMSS	KW0510	751000FHX30	PV028R1L1T1NMMC
1/2X3/4FF33BL	KW0511	751000MAX30	PV028R1L1T1NMML
1/2X3/4FF44BL	KW0511	751000MAXM10	PV028R1L1T1NMMW
1/2X3/8FF33MS	KW0512	751000MAXM30	PV028R1L1T1NMMZ
1/2X3/8FF33MSS	KW0512	7511 RFV	PV028R9K1T1N100K0042
1/2X3/8FFMSS	KW0513	7511 RFV	PV028R9K1T1NDCCK0196
1/2X3/8FG43B	KW0513	7511 RV	PV028R9K1T1NDLCK0064
1/2X3/8FG43BL	KW0515	7511 V	PV028R9K1T1NELCX5926K0169
1/2X3/8FG44BL	KW0515	7511 V	PV028R9K1T1NELCX5926K0170
1/2X3/8FGMSS	KW0515	75-12-56	PV028R9K1T1NGLCK0182
1/2X3/8GG44MS	KW0515	75-16-56	PV028R9L1T1NDLCX5908
1/2X3/8GG44MSS	KW0516	75-16-56V	PV032L1K1T1NMFC
1/2X3/8PTR34B	KW0516	7516-QC	PV032L1K1T1NMMC
1/2X3/8PTR34BL	KW0516	7516-QC	PV032L1K1T1NMMW
1/2X3/8PTR34MS	KW0516	751FIL	PV032L1L1T1NMMC
1/2X3/8PTR34MSS	KW0517	751FIL	PV032R1D1T1N001
1/2X3/8PTR44BL	KW0517	7520 RUV	PV032R1D1T1NMMC
1/2X3/8PTR44MSS	KW0518	7520 RUV	PV032R1D1T1NMRC
1/2X3/8PTRMS	KW0518	7520 RV	PV032R1E1T1NMMC
1/2X3/8PTRMSS	KW0518	7520 RV	PV032R1K1A1NKCZ
1/2YMMM444BL	KW0518	7520 UV	PV032R1K1A1NMMC
1/2YMMS443BL	KW0519	7520 UV	PV032R1K1A1WMFC
1/4 CD45-S	KW0519	7520 V	PV032R1K1AYNECC

1/4 CD-S	KW0520	7520 V	PV032R1K1AYNGLC
1/4 CD-SS	KW0520	75-20-56	PV032R1K1AYNMMC
1/4 CR-S	KW0520	75-20-56V	PV032R1K1AYNMMW
1/4 CR-SS	KW0520	7520-QC	PV032R1K1AYNMT1
1/4 DD45-S	KW0521	7521 RFV	PV032R1K1AYNMTP
1/4 DD45-SS	KW0521	7521 RFV	PV032R1K1B1NMMC
1/4 DD-S	KW0525	7521 RV	PV032R1K1B1NMRC
1/4 DD-SS	KW0525	7521 S	PV032R1K1BBN100
1/4 FF-B	KW0526	7521 S	PV032R1K1BBNMFC
1/4 FF-S	KW0526	7521 V	PV032R1K1BBNMMC
1/4 FG-S	KW0527	7521 V	PV032R1K1BCNMMC
1/4 GG-B	KW0527	7521-QC	PV032R1K1J1NMMC
1/4 GG-S	KW0528	7521-QC	PV032R1K1JHNMMC
1/4 GG-SS	KW0528	75-24-56	PV032R1K1KJNMMC
1/4 HHP-B	KW0530	752FIL	PV032R1K1T1N001
1/4 HHP-S	KW0530	752FIL	PV032R1K1T1N100
1/4 HHP-SS	KW0532	75-32-56	PV032R1K1T1NDC1
1/4 HP-B	KW0532	754-01011-8	PV032R1K1T1NDCC
1/4 HPBA-S	KW0533	754FIL	PV032R1K1T1NDLC
1/4 HP-S	KW0533	754FIL	PV032R1K1T1NDLW
1/4 HP-SS	KW0534	75500FGX10	PV032R1K1T1NEC1
1/4 KMMOO-S	KW0534	75500FGX30	PV032R1K1T1NECC
1/4 KMMOO-SS	KW0535	75500MAX30	PV032R1K1T1NEL1
1/4 MMO-S	KW0535	75500MAXM10	PV032R1K1T1NELC
1/4 MMO-SS	KW0541	75500MAXM30	PV032R1K1T1NELW
1/4 MMS-S	KW0541	758FIL	PV032R1K1T1NELZ
1/4 MMS-SS	KW0542	758FIL	PV032R1K1T1NFPV
1/4 MRO-S	KW0542	75900FHX10	PV032R1K1T1NGC1
1/4 MRO-SS	KW0543	75900FHX30	PV032R1K1T1NGCC
1/4 RRS-S	KW0543	75900MAX30	PV032R1K1T1NGL1
1/4 RRS-SS	KW0546	75900MAXM30	PV032R1K1T1NGLC
1/4 X 1/8 CD-S	KW0546	7593U	PV032R1K1T1NGLW
1/4 X 1/8 FF-S	KW0547	75C12-12F	PV032R1K1T1NGLZ
1/4 X 1/8 FG-B	KW0547	75C12-12F-DBP	PV032R1K1T1NHC1
1/4 X 1/8 FG-S	KW0547	75C12-12RP	PV032R1K1T1NHCCX5887
1/4 X 1/8 GG-S	KW0547	75C12-SPK	PV032R1K1T1NHCW
1/4 X 1/8 PTR-B	KW0549	75C16-16F	PV032R1K1T1NHL1
1/4 X 1/8 PTR-S	KW0549	75C16-16F-DBP	PV032R1K1T1NHLC
1/4 X 2.5 FFF-S	KW0550	75C16-16F-DBP	PV032R1K1T1NHLZ
1/4-6F3HG5S	KW0550	75C16-16FV	PV032R1K1T1NKCC
1/4-6F4OHG5S	KW0551	75C16-16RP	PV032R1K1T1NKCW
1/4BSPBUWS	KW0551	75C16-SPK	PV032R1K1T1NKL1
1/4BSPBUWSS	KW0552	75C20-20F	PV032R1K1T1NKLC
1/4CD43B	KW0552	75C20-20F-DBP	PV032R1K1T1NMCC
1/4CD43BL	KW0553	75C20-20FV	PV032R1K1T1NMF1
1/4CDMS	KW0553	75C20-20RP	PV032R1K1T1NMFC
1/4CDMSS	KW0554	75C20-SPK	PV032R1K1T1NMFW
1/4CR33BL	KW0554	75C20-SPKV	PV032R1K1T1NMM1
1/4DD44B	KW0556	75C24-24F	PV032R1K1T1NMMC
1/4DD44BL	KW0556	75C24-24RP	PV032R1K1T1NMMCX5899
1/4F4UF4UB	KW0582	75C24-SPK	PV032R1K1T1NMMW
1/4F4UG4B-20	KW0582	75C32-32F	PV032R1K1T1NMMZ
1/4F4UG4B-30	KW0582	75C32-32RP	PV032R1K1T1NMR1

1/4F4UG4B-50	KW0582	75C32-SPK	PV032R1K1T1NMRC
1/4FF33B	KW0584	75C40-40F	PV032R1K1T1NMRZ
1/4FF33BL	KW0584	75C40-40RP	PV032R1K1T1NMT1
1/4FF33MS	KW0586	75C48-48F	PV032R1K1T1NUPK
1/4FF33MSS	KW0586	75KBIW26DEX	PV032R1K1T1NUPM
1/4FF41G4BL35L	KW0587	75KBIW26DPX	PV032R1K1T1NUPR
1/4FF41G4BL51L	KW0587	75KBIW26EEX	PV032R1K1T1VFPV
1/4FF44B	KW0589	75KBIW26EVX	PV032R1K1T1VMFC
1/4FF44BL	KW0589	75KBIW26MEN	PV032R1K1T1VMMC
1/4FF633BL	KW0590	75KBIW26MEX	PV032R1K1T1VMMW
1/4FFMSS	KW0590	75KBIW26MKX	PV032R1K1T1VMRC
1/4FG43BL	KW0644	75KBIW26MPN	PV032R1K1T1WMFC
1/4FG44BL	KW0644	75KBIW26MPX	PV032R1K1T1WMMC
1/4FGMSS	KW0648	75KBIW26MVN	PV032R1K1T1WMMW
1/4FHG4-B	KW0648	75KBIW26MVX	PV032R1K1T1WMRC
1/4FN4BL	KW0651	75KBIW26REX	PV032R1K8T1NMMC
1/4GG44B	KW0651	75KBIW26REXS	PV032R1L1BBNMMZ
1/4GG44BL	KW0702	75KBIW26RVX	PV032R1L1T1N100
1/4GG44MS	KW0702	75KBTF16MEXS	PV032R1L1T1NGL1
1/4GG44MSS	KW0702	75KFIW26MPX	PV032R1L1T1NMFC
1/4HHP3B	KW0702	75MDC-12	PV032R1L1T1NMMC
1/4HHP3BL	KW0704	75MDC-16	PV032R1L1T1NMMW
1/4HP3B	KW0704	75MDC-20	PV032R1L1T1NMMZ
1/4HP3MS	KW0705	75MDC-24	PV032R1L1T1NMT1
1/4HP3MSS	KW0705	75MDC-32	PV032R9K1T1NELCK0067
1/4HPMSS	KW0705	75MDC-40	PV032R9K1T1NGLWK0378
1/4KMMOO4BL	KW0705	75MDP-12	PV032R9K1T1NMMCK0005
1/4KMRO4434BL	KW0706	75MDP-16	PV032R9K1T1NMMCK0116
1/4KRRS3BL	KW0706	75MDP-20	PV032R9K1T1NMMCK0189
1/4L4NMS	KW0707	75MDP-24	PV032R9K1T1NMMCK0262
1/4L4NMSS	KW0707	75MDP-32	PV032R9K1T1NMMCK0273
1/4M16FHG8S	KW0708	75MDP-40	PV032R9K1T1NMMCK0274
1/4MMO444B	KW0708	75MDP-48	PV032R9K1T1NMMCK0327
1/4MMO444BL	KW0708	75N12-12F	PV032R9K1T1VMMCK0042
1/4MMO444MS	KW0708	75N12-12F-DBP	PV032R9L1T1W100K0093
1/4MMO444MSS	KW0709	75N12-12RP	PV032R9L1T1WMMCX5918K0093
1/4MMS443B	KW0709	75N12-SPK	PV040L1E1T1NKCC
1/4MMS443BL	KW0709	75N16-16F	PV040L1E1T1NMMC
1/4MRO434B	KW0709	75N16-16F-DBP	PV040L1K1T1NFPV
1/4MRO434BL	KW0712	75N16-16FV	PV040L1K1T1NMCC
1/4MRS433BL	KW0712	75N16-16RP	PV040L1K1T1NMFC
1/4P40NBL	KW0713	75N16-SPK	PV040L1K1T1NMMC
1/4P4UNBL	KW0713	75N20-20F	PV040R1D1T1NMMC
1/4RRD	KW0718	75N20-20F-DBP	PV040R1D3T1VMMC
1/4RRO334BL	KW0718	75N20-20RP	PV040R1E1T1NMRC
1/4RRP	KW0718	75N20-SPK	PV040R1K1A1NGCC
1/4RRS333BL	KW0718	75N24-24F	PV040R1K1A1WMRC
1/4WGG44B	KW0719	75N24-24RP	PV040R1K1AYNHL1
1/4WGG44BL	KW0719	75N24-24RPV	PV040R1K1AYNMFC
1/4X1/2FF33B	KW0720	75N24-SPK	PV040R1K1AYNMMC
1/4X1/2FF33BL	KW0720	75N32-32F	PV040R1K1AYNMMCX5899
1/4X1/2FF44BL	KW0723	75N32-32RP	PV040R1K1AYNMRC
1/4X1/2GG44BL	KW0723	75N32-SPK	PV040R1K1BBNMMC

1/4X1/4F3HGS	KW0730	75N40-40F	PV040R1K1BBNMML
1/4X1/4F4OHGS	KW0730	75N40-40RP	PV040R1K1BBNMRL
1/4X1/8FF33MS	KW0732	75N48-48F	PV040R1K1T1N001
1/4X1/8FF33MSS	KW0732	75-P-13	PV040R1K1T1N100
1/4X1/8FFMSS	KW0752	75PK/T527	PV040R1K1T1NDC1
1/4X1/8FG43B	KW0752	75RVP-5072	PV040R1K1T1NDCCX5809
1/4X1/8FG43BL	KW0753	75SBIW26DEX	PV040R1K1T1NDCK
1/4X1/8FG44BL	KW0753	75SBIW26DPX	PV040R1K1T1NDLC
1/4X1/8FGMSS	KW0753	75SBIW26DXXS	PV040R1K1T1NEC1
1/4X1/8GG44MS	KW0753	75SBIW26EEX	PV040R1K1T1NECC
1/4X1/8GGMSS	KW0754	75SBIW26EVX	PV040R1K1T1NEL1
1/4X1/8PTR34B	KW0754	75SBIW26EXX_01	PV040R1K1T1NELC
1/4X1/8PTR34BL	KW0755	75SBIW26MEN	PV040R1K1T1NELW
1/4X1/8PTR34MS	KW0755	75SBIW26MEX	PV040R1K1T1NFPV
1/4X1/8PTR34MSS	KW0756	75SBIW26MKX	PV040R1K1T1NGC1
1/4X1/8PTR44BL	KW0756	75SBIW26MPN	PV040R1K1T1NGCC
1/4X1/8PTR44HBL	KW0766	75SBIW26MPX	PV040R1K1T1NGCZ
1/4X1/8PTR44MSS	KW0766	75SBIW26MVN	PV040R1K1T1NGL1
1/4X1/8PTRMSS	KW0782	75SBIW26MVX	PV040R1K1T1NGLC
1/4X3/8FF33B	KW0782	75SBIW26REX	PV040R1K1T1NGLZ
1/4X3/8FF33BL	KW0829	75SBIW26REXS	PV040R1K1T1NHC1
1/4X3/8FF44BL	KW0829	75SBIW26RVX	PV040R1K1T1NHCC
1/4X3/8GG44B	KW0834	75SBIW26RXXS	PV040R1K1T1NHL1
1/4X3/8GG44BL	KW0834	75SBTF16MEXS	PV040R1K1T1NHLB
1/4YMMM444BL	KW0835	75SFIW26EXX	PV040R1K1T1NHLC
1/4YMMS443BL	KW0835	75SFIW26MXX	PV040R1K1T1NHLW
1/8 CD45-S	KW0835	7603N	PV040R1K1T1NKCCX5887
1/8 CD45-SS	KW0835	761-12	PV040R1K1T1NKL1
1/8 CD-S	KW0838	761-16	PV040R1K1T1NKLC
1/8 CD-SS	KW0838	7620 04 20	PV040R1K1T1NKLW
1/8 CR-S	KW0854	7620N	PV040R1K1T1NMCC
1/8 DD-S	KW0854	762FIL	PV040R1K1T1NMF1
1/8 DD-SS	KW0856	762FIL	PV040R1K1T1NMFC
1/8 FF-B	KW0856	7630 04 00	PV040R1K1T1NMFCX5830
1/8 FF-S	KW0857	7630 06 00	PV040R1K1T1NMFCX5950
1/8 FG-S	KW0857	7631 04 00	PV040R1K1T1NMFW
1/8 GG-B	KW0858	7631 06 00	PV040R1K1T1NMLC
1/8 GG-S	KW0858	76383-023-00N	PV040R1K1T1NMM1
1/8 GG-SS	KW0859	7640 04 10	PV040R1K1T1NMMC
1/8 HHP-B	KW0859	7640 04 19	PV040R1K1T1NMML
1/8 HHP-S	KW0860	7640 06 10	PV040R1K1T1NMMW
1/8 HHP-SS	KW0860	7640 06 19	PV040R1K1T1NMMZ
1/8 HP-B	KW0861	7645 04 10	PV040R1K1T1NMR1
1/8 HP-S	KW0861	7645 06 10	PV040R1K1T1NMRC
1/8 KMMOO-S	KW0861	7649 04 10	PV040R1K1T1NMRZ
1/8 MMO-S	KW0861	7649 04 19	PV040R1K1T1NMT1
1/8 MMO-SS	KW0862	7649 06 10	PV040R1K1T1NSLC
1/8 MMS-S	KW0862	7649 06 19	PV040R1K1T1NUPM
1/8 MRO-S	KW0863	7660 00 00 06	PV040R1K1T1NUPR
1/8 MRO-SS	KW0863	7660 03 09	PV040R1K1T1NUPS
1/8 RRS-S	KW0867	7660 03 19	PV040R1K1T1VMMC
1/8-4F3HG5S	KW0867	7660 04 09	PV040R1K1T1VMMCX5830
1/8-4F4OHG5S	KW0869	7660 04 10	PV040R1K1T1WMM1

1/8-4F4OHMG5SS	KW0869	7660 04 19	PV040R1K1T1WMMC
1/8BSPBUWS	KW0872	7660 06 10	PV040R1K1T1WMMW
1/8BSPBUWSS	KW0872	7660 06 13	PV040R1K1T1WMR1
1/8CD43B	KW0872	7660 06 19	PV040R1K8T1NMMC
1/8CD43BL	KW0872	7660 08 10	PV040R1L1AYNHCCX5889
1/8CD45MS	KW0873	7660 08 13	PV040R1L1T1NELC
1/8CR33BL	KW0873	7660 08 17	PV040R1L1T1NHCCX5889
1/8DD44B	KW0873	7662 04 10	PV040R1L1T1NMFC
1/8DD44BL	KW0873	7662 04 19	PV040R1L1T1NMMC
1/8F4UF4UB	KW0876	7662 06 10	PV040R1L1T1NMRC
1/8F4UG4B-20	KW0876	7662 06 13	PV040R1L1T1NUPR
1/8FF33B	KW0882	7662 06 19	PV040R9K1KJNMFCK0021
1/8FF33BL	KW0882	7665 04 10	PV040R9K1T1NGLCK0144
1/8FF33MS	KW0887	7665 06 10	PV040R9K1T1NMFCK0275
1/8FF33MSS	KW0887	7665 06 13	PV040R9K1T1NMM1K0093
1/8FF41G4BL22L	KW0887	7665 06 17	PV040R9K1T1NMRCK0165
1/8FF41G4BL42L	KW0887	7665 08 10	PV040R9K1T1WKCCK0291
1/8FF44B	KW0888	7665 08 13	PV040R9K1T1WMMCX5918K0118
1/8FF44BL	KW0888	7665 08 17	PV040R9K1T1WMMCX5918K0192
1/8FF633BL	KW0888	7665 56 14	PV046L1E1BCN001
1/8FFMSS	KW0888	7668 04 10	PV046L1K1T1NDLC
1/8FG43BL	KW0889	7668 06 10	PV046L1K1T1NMFC
1/8FG44BL	KW0889	7668 06 13	PV046L1K1T1NMMC
1/8FGMSS	KW0890	7668 08 10	PV046L1L1T1NMMC
1/8FHG4-B	KW0890	7668 08 13	PV046R1D1B1NMCC
1/8FN4BL	KW0891	7668 08 17	PV046R1D1T1NMCC
1/8GG44B	KW0891	7669 03 09	PV046R1D1T1NMFC
1/8GG44BL	KW0892	7669 03 19	PV046R1D1T1NMMC
1/8GG44MS	KW0892	7669 04 10	PV046R1D1T1NMMW
1/8GG44MSS	KW0893	7669 04 19	PV046R1D3T1NHLZ
1/8HHP3B	KW0893	7669 04 20	PV046R1D3T1NMMC
1/8HHP3BL	KW0894	7669 06 10	PV046R1E1AYNMFC
1/8HP3B	KW0894	7669 06 13	PV046R1E1T1NMCC
1/8HP3MS	KW0895	7669 06 19	PV046R1E1T1NMFC
1/8HPMSS	KW0895	7669 08 10	PV046R1K1A1NMMC
1/8KMMOO4BL	KW0896	7669 08 13	PV046R1K1A1NMMW
1/8KMRO4434BL	KW0896	7669 08 17	PV046R1K1A1WMMZ
1/8L4NMSS	KW0897	766FIL	PV046R1K1A1WMR1
1/8MMO444B	KW0897	766FIL	PV046R1K1AYNEL1
1/8MMO444BL	KW0898	7680 06 10	PV046R1K1AYNELC
1/8MMS443B	KW0898	7680 08 10	PV046R1K1AYNGCC
1/8MMS443BL	KW0899	7680 08 13	PV046R1K1AYNGL1
1/8MRO434BL	KW0899	7680 10 17	PV046R1K1AYNHCC
1/8MRS433BL	KW0899	7680 12 21	PV046R1K1AYNHL1
1/8P40NBL	KW0899	768FIL	PV046R1K1AYNHLZ
1/8P4UNBL	KW0900	768FIL	PV046R1K1AYNKLZ
1/8RRD	KW0900	76C4-4M	PV046R1K1AYNMFC
1/8RRO334BL	KW0900	76KBIW33DEX	PV046R1K1AYNMFZ
1/8RRP	KW0900	76KBIW33DPX	PV046R1K1AYNMM1
1/8RRS333BL	KW0906	76KBIW33EEX	PV046R1K1AYNMMC
1/8WGG44B	KW0906	76KBIW33EKX	PV046R1K1AYNMMK
1/8WGG44BL	KW0907	76KBIW33EVX	PV046R1K1AYNMMW
1/8X1/2FF33BL	KW0907	76KBIW33MEX	PV046R1K1AYNMRC

1/8X1/2GG44BL	KW0908	76KBIW33MKX	PV046R1K1AYNMRZ
1/8X1/4FF33B	KW0908	76KBIW33MPN	PV046R1K1AYNUPR
1/8X1/4FF33BL	KW0908	76KBIW33MPX	PV046R1K1B1NMMC
1/8X1/4FF44BL	KW0908	76KBIW33MVN	PV046R1K1B1NMRC
1/8X1/4GG44B	KW0934	76KBIW33MVX	PV046R1K1BBNHCC
1/8X1/4GG44BL	KW0934	76KBIW33REX	PV046R1K1BBNMFC
1/8X1/8F3HGS	KW0964	76KBIW33REXS	PV046R1K1BBNMLK
1/8X1/8F4OHGS	KW0964	76KBIW33REXS_01	PV046R1K1BBNMRC
1/8X3/8FF33B	KW0965	76KBIW33RKX	PV046R1K1BBNMRZ
1/8X3/8FF33BL	KW0965	76KBIW33RVX	PV046R1K1BBWMRCX5889
1/8X3/8FF44BL	KW0966	76KFIW33MPX	PV046R1K1CDNMMC
1/8X3/8GG44BL	KW0966	76MDC-6	PV046R1K1HJVMTK
1/8XM5FG48BL	KW0967	76MDP-6	PV046R1K1JHNELZ
1/8XM5PTR48BL	KW0967	76N4-4F	PV046R1K1JHNMFW
1/8YMMM444BL	KW0968	76SBIW33DEX	PV046R1K1JHNMM1
1/8YMMS443BL	KW0968	76SBIW33DPX	PV046R1K1JHNMMC
10 AOEL6-S	KW0972	76SBIW33DXXS	PV046R1K1JHNMMW
10 AOEL6-SS	KW0972	76SBIW33EEX	PV046R1K1JHNMRC
10 BL-S	KW0973	76SBIW33EKX	PV046R1K1JHNMRW
10 BL-SS	KW0973	76SBIW33EVX	PV046R1K1JHNUPR
10 BODY DIE	KW0975	76SBIW33EXXS	PV046R1K1KJNMFC
10 BTX-B	KW0975	76SBIW33MEX	PV046R1K1KJNMFW
10 BTX-S	KW0976	76SBIW33MKX	PV046R1K1KJNMM1
10 BTX-SS	KW0976	76SBIW33MPN	PV046R1K1KJNMMC
10 BU-S	KW0977	76SBIW33MPX	PV046R1K1KJNMMW
10 BZ-SS	KW0977	76SBIW33MVN	PV046R1K1KJNMMZ
10 C5OLO-S	KW0978	76SBIW33MVX	PV046R1K1KJNUPF
10 C5OLO-S 1SF230	KW0978	76SBIW33REX	PV046R1K1KJNUPR
10 C6BU-S	KW0978	76SBIW33REXS	PV046R1K1KJVMTK
10 C6LO-S	KW0978	76SBIW33RKX	PV046R1K1T1N001
10 C6LO-S PLUG	KW0979	76SBIW33RVX	PV046R1K1T1N100
10 C6X-S	KW0979	76SBIW33RXXS	PV046R1K1T1NDCC
10 CC5OX-S	KW0980	76SFIW33MXX	PV046R1K1T1NDL1
10 CCCTX-S	KW0980	77020:4115439	PV046R1K1T1NDLC
10 CCTX-S	KW0982	7707FIL	PV046R1K1T1NDLZ
10 CLO-S	KW0982	7707FIL	PV046R1K1T1NEC1
10 CTX-B	KW0982	7707FIL	PV046R1K1T1NECC
10 DTX-S	KW0982	7707FIL	PV046R1K1T1NECCX5947
10 EBU-S	KW0983	7708FIL	PV046R1K1T1NEL1
10 ELO-S	KW0983	7708FIL	PV046R1K1T1NELC
10 ETX-B	KW0984	7709FIL	PV046R1K1T1NELCX5947
10 EW-SS	KW0984	7709FIL	PV046R1K1T1NELW
10 F5BU-S	KW0985	771000FH30	PV046R1K1T1NFPV
10 F5OHAO-S	KW0985	771000MA2	PV046R1K1T1NGC1
10 F5OLO-S	KW0986	7710FIL	PV046R1K1T1NGCB
10 F5OX-S	KW0986	7710FIL	PV046R1K1T1NGCC
10 F65OL-S	KW0991	7711FIL	PV046R1K1T1NGL1
10 F65OX-S	KW0991	7711FIL	PV046R1K1T1NGLB
10 F6X-S	KW0996	7712FIL	PV046R1K1T1NGLC
10 FBU-S	KW0996	7712FIL	PV046R1K1T1NGLCX5947
10 FF5OLO-S	KW0996	7713FIL	PV046R1K1T1NGLW
10 FF5OX-S	KW0996	7713FIL	PV046R1K1T1NGLZ
10 FLO-S	KW0997	7717FIL	PV046R1K1T1NHCC

10 FNLBA-S	KW0997	7717FIL	PV046R1K1T1NHCCX5889
10 FNL-S	KW1004	7718FIL	PV046R1K1T1NHL1
10 FNTX-B	KW1004	7718FIL	PV046R1K1T1NHLC
10 FNTX-S	KW1006	7719FIL	PV046R1K1T1NHLZ
10 FNZ-SS	KW1006	7719FIL	PV046R1K1T1NKCCX5887
10 FW-SS	KW1008	771FIL	PV046R1K1T1NKL1
10 G5G5JG5-S	KW1008	771FIL	PV046R1K1T1NKLC
10 G6X-S	KW1017	7720FIL	PV046R1K1T1NKLW
10 G6X-SS	KW1017	7720FIL	PV046R1K1T1NMCC
10 GTX-S	KW1020	7721FIL	PV046R1K1T1NMCK
10 HBU-S	KW1020	7721FIL	PV046R1K1T1NMF1
10 HL6-S	KW1020	7722FIL	PV046R1K1T1NMFC
10 HLO-S	KW1020	7722FIL	PV046R1K1T1NMFCX5889
10 HP5ON-S	KW1021	7723FIL	PV046R1K1T1NMFK
10 HP5ON-S V0894	KW1021	7723FIL	PV046R1K1T1NMFW
10 HP5ON-S V0894 NO CAP	KW1021	7724FIL	PV046R1K1T1NMFZ
10 HP5ON-SS	KW1021	7724FIL	PV046R1K1T1NML1
10 HTX-S	KW1022	774-12	PV046R1K1T1NMLB
10 HW-SS	KW1022	774-16	PV046R1K1T1NMLC
10 HX6-S	KW1023	774-20	PV046R1K1T1NMLW
10 JBU-S	KW1023	774-24	PV046R1K1T1NMM1
10 JLO-S	KW1023	774-32	PV046R1K1T1NMMC
10 JTX-B	KW1023	7762 08 10	PV046R1K1T1NMMK
10 JTX-S	KW1024	7762 10 13	PV046R1K1T1NMMW
10 JW-SS	KW1024	7762 14 17	PV046R1K1T1NMMZ
10 JX6-S	KW1024	7762 18 21	PV046R1K1T1NMR1
10 KLO-S	KW1024	7770 04 00	PV046R1K1T1NMRC
10 KTX-S	KW1035	7770 06 00	PV046R1K1T1NMRK
10 KTX-SS	KW1035	7770 08 00	PV046R1K1T1NMRW
10 LOHB3-S	KW1037	7770 10 00	PV046R1K1T1NMRZ
10 LOHX6-S	KW1037	7770 12 00	PV046R1K1T1NMT2
10 MTX-S	KW1038	7770 60 00	PV046R1K1T1NMTP
10 MTX-SS	KW1038	7771 10 10	PV046R1K1T1NSL1
10 NUT DIE	KX5053	7771 13 13	PV046R1K1T1NSLC
10 OTX-S	KX5053	7771 17 17	PV046R1K1T1NSLK
10 P5ON-S	KX5220	7771 21 21	PV046R1K1T1NSLZ
10 P5ON-S V0894	KX5220	7772 04 00	PV046R1K1T1NUPF
10 PNBZ-SS	KX5229	7772 06 00	PV046R1K1T1NUPK
10 PNLOBA-S	KX5229	7772 08 00	PV046R1K1T1NUPM
10 PNLO-S	KX5327	7776 04 00	PV046R1K1T1NUPR
10 R5BU-S	KX5327	7776 06 00	PV046R1K1T1VGLC
10 R5OLO-S	KX5368	7776 08 00	PV046R1K1T1VHCCX5889
10 R5OX-S	KX5368	7776 10 00	PV046R1K1T1VKLC
10 R6LO-S	KX5399	7776 12 00	PV046R1K1T1VMFC
10 R6X-S	KX5399	7780 04 19	PV046R1K1T1VMFK
10 R6X-SS	KX5448	7786H	PV046R1K1T1VMM1
10 RTX-B	KX5448	77C4-M562C	PV046R1K1T1VMMC
10 RTX-S	KX5464	77C4-SF562CX	PV046R1K1T1VMMW
10 S5OLO-S	KX5464	77C4-SM375CX	PV046R1K1T1VMRC
10 S6LO-S	KX5481	77KBIW48DEXS	PV046R1K1T1VMTK
10 S6X-SS	KX5481	77N4-SM375CX	PV046R1K1T1VUPM
10 SBR	KX5517	77N4-SM562CX	PV046R1K1T1WHLC
10 STX-S	KX5517	77PDC-4	PV046R1K1T1WMF1

10 TIZ .375-SS	KX5518	77PDP-4	PV046R1K1T1WMFC
10 TIZ .500-SS	KX5518	77SBIW48DEX	PV046R1K1T1WMFK
10 TL-S	KX5520	7800 04 10	PV046R1K1T1WMLZ
10 TL-SS	KX5520	7800 04 19	PV046R1K1T1WMMC
10 TPL-S	KX5613	7800 06 10	PV046R1K1T1WMR1
10 TPL-S BP	KX5613	7800 06 13	PV046R1K1T1WMRC
10 TU-S	KX5615	7800 06 19	PV046R1K1T1WMRK
10 TX-B	KX5615	7800 08 10	PV046R1K1T1WUPM
10 TX-S	KX5616	7800 08 13	PV046R1L1AYVGCC
10 TX-S BP	KX5616	7800 10 13	PV046R1L1BBNMMC
10 TX-SS	KX5617	7801 04 10	PV046R1L1BBNMMW
10 TZ-SS	KX5617	7801 06 10	PV046R1L1BBNMMZ
10 TZ-T	KX5618	7801 06 13	PV046R1L1JHNMMW
10 V5OLO-S	KX5618	7801 08 10	PV046R1L1JHNMMZ
10 V6LO-S	KX5619	7801 08 13	PV046R1L1KJNMMC
10 V6X-S	KX5619	7801 10 13	PV046R1L1KJNMMW
10 V6X-S PLUG	KX5620	7802 04 10	PV046R1L1T1N001
10 V6X-SS	KX5620	7802 06 10	PV046R1L1T1NMCC
10 VTX-S	KX5621	7802 06 13	PV046R1L1T1NMFB
10 WBU-S	KX5621	7802 08 10	PV046R1L1T1NMFC
10 WELO-S	KX5622	7802 08 13	PV046R1L1T1NMFW
10 WF5OLO-WLNL-S	KX5622	7802 10 13	PV046R1L1T1NMM1
10 WGTX-S	KX5623	7808 04 10	PV046R1L1T1NMMC
10 WGTX-WLN-S	KX5623	7808 04 13	PV046R1L1T1NMMW
10 WJJLO-S	KX5624	7808 04 14	PV046R1L1T1NMMZ
10 WJJLO-WLNL-S	KX5624	7808 04 17	PV046R1L1T1NMR1
10 WJJTX-WLN-S	KX5636	7808 04 21	PV046R1L1T1NMRC
10 WJTX-WLN-S	KX5636	7810 10 10	PV046R1L1T1NMRW
10 WLNL-S	KX5640	7810 13 13	PV046R1L1T1NUPF
10 WLO-S	KX5640	7810 17 17	PV046R1L1T1NUPPX5935
10 WLZ-SS	KX5647	7810 19 19	PV046R9K1KJNMMCK0072
10 WNLO-S	KX5647	7810 21 21	PV046R9K1T1NGLWK0114
10 WNTX-WLN-S	KX5654	781-12	PV046R9K1T1NHLCK0199
10 WTX-WLN-S	KX5654	781-16	PV046R9K1T1NMFCK0021
10 XHL6-S	KX5655	7812 10 10	PV046R9K1T1NMFCK0352
10 XHLO-S	KX5655	7812 13 13	PV046R9K1T1NMTPK0113
1000 RF	KX5659	7812 17 17	PV046R9L1T1NMFCK0021
1000 RF	KX5659	7812 19 19	PV063L1E1T1NMMC
10000-PSEP	KX5789	7812 21 21	PV063L1K1T1NMFZ
10000-PSEP	KX5789	781-20	PV063L1K1T1NMMC
10000-PSN	KX5V6-40-40	781-24	PV063L1L1T1NMFC
10000-PSN	KX5V6-48-40	7818 04 10	PV063R1D1T1NMMC
10000-PSV	KX5V6-48-48	7818 04 13	PV063R1D1T1VMMC
10000-PSV	KX6007	7818 04 17	PV063R1E1A1NUPR
1000-16-00040-0000-000000	KX6007	7818 04 19	PV063R1E1T1NMFC
1000-16-00040-0000-000000	KX6023	7818 04 21	PV063R1E8T1NMMC
1000-16-00080-0000-000000	KX6023	7818 19 10	PV063R1K1ABNMMW
1000-16-00080-0000-000000	KX6026	7818 19 13	PV063R1K1AYNHCC
1000-16-00090-0000-000000	KX6026	7818 19 19	PV063R1K1B1NMRC
1000-16-00090-0000-000000	KX6026	7818 19 21	PV063R1K1BBNMFC
1000-16-00110-0120-000000	KX6026	7820 00 10	PV063R1K1BBNMMC
1000-16-00110-0120-000000	KX6196	7820 00 13	PV063R1K1BBNMRC
1000-16-00125-0000-000000	KX6196	7820 00 17	PV063R1K1BBWKLB

1000-16-00125-0000-000000	KX9022	7820 00 21	PV063R1K1H1NMFZ
1000-16-00125-2000-000000	KX9022	7822 00 10	PV063R1K1J1NHLZ
1000-16-00125-2000-000000	KX9032	7822 00 13	PV063R1K1JHNMMZ
1000-16-00130-0000-000000	KX9032	7822 00 17	PV063R1K1KJNMFC
1000-16-00130-0000-000000	KX9078	7822 00 21	PV063R1K1LKNMFC
1000-16-00160-0000-000000	KX9078	7828 00 10	PV063R1K1T1N001
1000-16-00160-0000-000000	KX9079	7828 00 13	PV063R1K1T1N100
1000-16-00160-0120-000000	KX9079	7828 00 17	PV063R1K1T1NFPV
1000-16-00160-0120-000000	KX9081	7828 00 19	PV063R1K1T1NGCC
1000-16-00200-0000-000000	KX9081	7828 00 21	PV063R1K1T1NGL1
1000-16-00200-0000-000000	KX9082	782TC-12	PV063R1K1T1NGLB
1000-16-00210-0000-000000	KX9082	782TC-16	PV063R1K1T1NGLC
1000-16-00210-0000-000000	KX9132	782TC-20	PV063R1K1T1NGLW
1000-16-00230-0000-000000	KX9132	782TC-24	PV063R1K1T1NHCC
1000-16-00230-0000-000000	KX9224	7830FIL	PV063R1K1T1NHCZ
1000-16-00250-0000-000000	KX9224	7830FIL	PV063R1K1T1NHL1
1000-16-00250-0000-000000	KX9260	783-100601	PV063R1K1T1NHLC
1000-16-00260-0000-000000	KX9260	783-400248	PV063R1K1T1NKCC
1000-16-00260-0000-000000	KX9271	783-400249	PV063R1K1T1NKLB
1000-16-00280-0000-000000	KX9271	7834FIL	PV063R1K1T1NKLC
1000-16-00280-0000-000000	KX9271	7834FIL	PV063R1K1T1NKLK
1000-16-00300-0000-000000	KX9271	7835FIL	PV063R1K1T1NKLW
1000-16-00300-0000-000000	KX9272	7835FIL	PV063R1K1T1NMC1
1000-16-00340-0000-000000	KX9272	7836FIL	PV063R1K1T1NMCC
1000-16-00340-0000-000000	KX9314	7836FIL	PV063R1K1T1NMCK
1000-16-00350-0000-000000	KX9314	7837FIL	PV063R1K1T1NMCW
1000-16-00350-0000-000000	KX9315	7837FIL	PV063R1K1T1NMF1
1000-16-00350-0100-000000	KX9315	7838FIL	PV063R1K1T1NMFB
1000-16-00350-0100-000000	KX9316	7838FIL	PV063R1K1T1NMFC
1000-16-00380-0000-000000	KX9316	7840FIL	PV063R1K1T1NMFCX5889
1000-16-00380-0000-000000	KX9317	7840FIL	PV063R1K1T1NMFW
1000-16-00400-0000-000000	KX9317	7841FIL	PV063R1K1T1NMFZ
1000-16-00400-0000-000000	KX9318	7841FIL	PV063R1K1T1NMLB
1000-16-00450-0000-000000	KX9318	7842FIL	PV063R1K1T1NMLC
1000-16-00450-0000-000000	KX9319	7842FIL	PV063R1K1T1NMLK
1000-16-00450-1000-000000	KX9319	7843FIL	PV063R1K1T1NMM1
1000-16-00450-1000-000000	KX9320	7843FIL	PV063R1K1T1NMMC
1000-16-00450-U000-000000	KX9320	7850FIL	PV063R1K1T1NMMCX5889
1000-16-00450-U000-000000	KX9335	7850FIL	PV063R1K1T1NMMK
1000-16-00460-0000-000000	KX9335	7855FIL	PV063R1K1T1NMMW
1000-16-00460-0000-000000	KX9355	7855FIL	PV063R1K1T1NMMZ
1000-16-00500-0000-000000	KX9355	7860 08 13	PV063R1K1T1NMR1
1000-16-00500-0000-000000	KX9355	7860 10 13	PV063R1K1T1NMRC
1000-16-00600-0000-000000	KX9355	7860 10 17	PV063R1K1T1NSCC
1000-16-00600-0000-000000	KX9356	7860 12 17	PV063R1K1T1NSCK
1000-16-00650-0000-000000	KX9356	7860 12 21	PV063R1K1T1NSL1
1000-16-00650-0000-000000	KX9357	7861 13 13	PV063R1K1T1NSLB
1000-16-00700-0000-000000	KX9357	7861 17 17	PV063R1K1T1NSLC
1000-16-00700-0000-000000	KX9357	7863R	PV063R1K1T1NTCC
1000-16-00800-0000-000000	KX9357	7864 18 18	PV063R1K1T1NTLB
1000-16-00800-0000-000000	KX9358	7870 08 13	PV063R1K1T1NTLC
1000-16-00910-0000-000000	KX9358	7870 10 13	PV063R1K1T1NTLZ
1000-16-00910-0000-000000	KX9359	7870 10 17	PV063R1K1T1NUPK

1000-16-00950-0000-000000	KX9359	7871 13 13	PV063R1K1T1NUPM
1000-16-00950-0000-000000	KX9359	7871 17 17	PV063R1K1T1NUPR
1000-16-00970-0000-000000	KX9359	7872Q	PV063R1K1T1VMMC
1000-16-00970-0000-000000	KX9360	7878FIL	PV063R1K1T1VMRC
1000-16-01000-0000-000000	KX9360	7878FIL	PV063R1K1T1WKLB
1000-16-01000-0000-000000	KX9360	7879FIL	PV063R1K1T1WMFC
1000-16-04200-0000-000000	KX9360	7879FIL	PV063R1K1T1WMMC
1000-16-04200-0000-000000	KX9361	787TC-10	PV063R1K4T1NFPV
10002-00240	KX9361	787TC-12	PV063R1K4T1NGLB
10002-00240	KX9419	787TC-16	PV063R1K4T1NGLC
10002-00250	KX9419	787TC-20	PV063R1K4T1NMFB
10002-00250	KX9420	787TC-8	PV063R1K4T1NMFZ
10002-00270	KX9420	7880 06 10	PV063R1K4T1NMLC
10002-00270	KX9421	7880 06 13	PV063R1K4T1NMM1
10002-00300	KX9421	7880 08 13	PV063R1K4T1NMMC
10002-00300	KX9422	7880 08 17	PV063R1K4T1NMMK
10002-00400	KX9422	7880 10 17	PV063R1K4T1NMMZ
10002-00400	KX9424	7880 12 21	PV063R1K4T1NMR1
10002-00410	KX9424	7880FIL	PV063R1K4T1NMT2X5939
10002-00410	KX9431	7880FIL	PV063R1K4T1NUPM
10002-00600	KX9431	7881 13 10	PV063R1K4T1VUPM
10002-00600	KX9432	7881 13 13	PV063R1K4T1WMFCX5807
10002-00650	KX9432	7881 17 17	PV063R1K4T1WMFW
10002-00650	KX9439	7881 21 21	PV063R1K4T1WMFZ
10002-01700	KX9439	7883 04 10	PV063R1L1T1NGL1
10002-01700	KX9447	7883 06 10	PV063R1L1T1NMF1
10003-00100	KX9447	7883 06 13	PV063R1L1T1NMFC
10003-00100	KX9448	7883 08 13	PV063R1L1T1NMMW
10003-00150	KX9448	7883 08 17	PV063R1L1T1NSCC
10003-00150	KX9524	7885 06 10	PV063R1L4T1N001
10003-00160	KX9524	7885 06 13	PV063R1L4T1NMMW
10003-00160	KX9724	7885 08 13	PV063R9K1ABNMMWK0207
10003-00200	KX9724	7885 08 17	PV063R9K1AYNMMCK0016
10003-00200	KX9850	7885 10 17	PV063R9K1T1NMFCK0117
10003-00240	KX9850	7885 12 21	PV063R9K1T1NMMCK0367
10003-00240	KX9910	7885 56 14	PV063R9K1T1WMCCK0072
10003-00250	KX9910	7886 13 10	PV063R9K4T1NSCCX5887K0119
10003-00250	KX9967	7886 13 13	PV063R9K4T1VMM1K0286
10003-00260	KX9967	7886 17 17	PV063R9L1T1NMMCK0368
10003-00260	KXAV4-12-12	7886 21 21	PV080L1K1T1NMMC
10003-00270	KXAV4-16-12	7887FIL	PV080L1K1T1NUPM
10003-00270	KXAV4-16-16	7887FIL	PV080R1D1T1NMMC
10003-00280	KXAV4-20-16	7888FIL	PV080R1D1T1NMMCX5899
10003-00280	KXAV6-20-20	7888FIL	PV080R1D1T1VMMC
10003-00300	KXAV6-24-20	7889FIL	PV080R1D3T1NMMW
10003-00300	KXAV6-24-24	7889FIL	PV080R1K1AAVMR1
10003-00350	KXFV4-12-12	7892 06 10	PV080R1K1AYNGCC
10003-00350	KXFV4-16-16	7892 06 13	PV080R1K1AYNMRC
10003-00380	KXFV4-20-16	7892 08 10	PV080R1K1B1NMFC
10003-00380	KXFV6-20-20	7892 08 13	PV080R1K1B1NMFZ
10003-00400	KXFV6-24-20	7892 08 17	PV080R1K1B1NMRC
10003-00400	KXFV6-24-24	7892 10 17	PV080R1K1B1NSLB
10003-00410	KXGV4-16-12	7892 10 21	PV080R1K1BBNMCZ

10003-00410	KXGV4-16-16	7892 12 21	PV080R1K1BBNMF1
10003-00500	KXGV4-20-16	7894 06 10	PV080R1K1BBNMMC
10003-00500	KXGV6-20-20	7894 06 13	PV080R1K1BBNUPR
10003-00515	KXGV6-24-20	7894 08 10	PV080R1K1J1NMMC
10003-00515	KXGV6-24-24	7894 08 13	PV080R1K1KJNUPK
10003-00520	KXNV4-12-12	7894 08 17	PV080R1K1KJNUPM
10003-00520	KXNV4-16-12	7894 10 17	PV080R1K1LKNMFC
10003-00550	KXNV4-16-16	7894 10 21	PV080R1K1LKNMRC
10003-00550	KXNV4-20-16	7894 12 21	PV080R1K1T1BMFC
10003-00600	KXNV6-20-20	7898FIL	PV080R1K1T1N001
10003-00600	KXNV6-24-20	7898FIL	PV080R1K1T1N100
10003-00650	KXNV6-24-24	7899 00 10	PV080R1K1T1NFPV
10003-00650	KY000008	7899 00 13	PV080R1K1T1NGCC
10003-00700	KY000008	7899 00 17	PV080R1K1T1NGL1
10003-00700	KY000180	7899 00 21	PV080R1K1T1NGLC
10003-00750	KY000180	7899 00 27	PV080R1K1T1NGLCX5947
10003-00750	KY000259	7899 00 34	PV080R1K1T1NGLW
10003-00765	KY000259	7899FIL	PV080R1K1T1NHCB
10003-00765	KY000260	7899FIL	PV080R1K1T1NHCC
10003-00800	KY000260	7901FIL	PV080R1K1T1NHLC
10003-00800	KY000265	7901FIL	PV080R1K1T1NHLW
10003-00840	KY000265	7902FIL	PV080R1K1T1NKCC
10003-00840	KY000268	7902FIL	PV080R1K1T1NKLC
10003-00850	KY000268	7909FIL	PV080R1K1T1NMC1
10003-00850	KY000576	7909FIL	PV080R1K1T1NMCC
10003-00900	KY000576	7910 04 00	PV080R1K1T1NMF1
10003-00900	KY0048	7910 06 00	PV080R1K1T1NMFC
10003-00990	KY0048	7910 08 00	PV080R1K1T1NMFK
10003-00990	KY0048	7910 10 00	PV080R1K1T1NMFW
10003-01000	KY0048	7910 12 00	PV080R1K1T1NML1
10003-01000	KY0050	791000FHV30	PV080R1K1T1NMLC
10003-01100	KY0050	791000MAV30	PV080R1K1T1NMM1
10003-01100	KY0051	791000MAVM10	PV080R1K1T1NMMC
10003-01150	KY0051	791000MAVM2	PV080R1K1T1NMMW
10003-01150	KY0051	791000MAVM30	PV080R1K1T1NMMZ
10003-01200	KY0051	7911 06 10	PV080R1K1T1NMRC
10003-01200	KY1006	7911 08 13	PV080R1K1T1NMT1
10003-01300	KY1006	7911 10 17	PV080R1K1T1NSC1
10003-01300	KY1007	7911 12 21	PV080R1K1T1NSCC
10003-01370	KY1007	7912FIL	PV080R1K1T1NSL1
10003-01370	KY1008	7912FIL	PV080R1K1T1NSLC
10003-01400	KY1008	7913 00 00 01	PV080R1K1T1NSLW
10003-01400	KY1009	7913 04 00	PV080R1K1T1NTCC
10003-01500	KY1009	7913 06 00	PV080R1K1T1NTLC
10003-01500	KY1009	7913 08 00	PV080R1K1T1NUCK
10003-01600	KY1009	7913 10 00	PV080R1K1T1NULC
10003-01600	KY1010FIL	7913 12 00	PV080R1K1T1NUPK
10003-01650	KY1010FIL	7914 06 10	PV080R1K1T1NUPM
10003-01650	KY1011	7914 08 13	PV080R1K1T1NUPR
10003-01660	KY1011	7914 10 17	PV080R1K1T1VMMC
10003-01660	KY1011	7914 12 21	PV080R1K1T1VMMCX5917
10003-01700	KY1011	7914FIL	PV080R1K1T1WHLC
10003-01700	KY1012	7914FIL	PV080R1K1T1WMMC

10003-01800	KY1012	7919FIL	PV080R1K4T1NHL1
10003-01800	KY1012	7919FIL	PV080R1K4T1NMFC
10003-01860	KY1012	791TC-12	PV080R1K4T1NMFZ
10003-01860	KY1013	791TC-16	PV080R1K4T1NMMCX5889
10003-01910	KY1013	791TC-20	PV080R1K4T1NMMZ
10003-01910	KY1014	791TC-24	PV080R1K4T1NMR1
10003-02300	KY1014	7920FIL	PV080R1K4T1NMT2X5939
10003-02300	KY1015	7920FIL	PV080R1K4T1NSCC
10003-02600	KY1015	7921 05 10	PV080R1K4T1NTCCX5887
10003-02600	KY1015	7921 05 13	PV080R1K4T1NUPR
10004-00100	KY1015	7921 07 13	PV080R1K4T1VMMC
10004-00100	KY1016	7921 07 17	PV080R1K4T1VMMCX5889
10004-00160	KY1016	7921FIL	PV080R1K4T1WMFCX5807
10004-00160	KY1017	7921FIL	PV080R1K8T1NFPV
10004-00200	KY1017	7922FIL	PV080R1L1BBNTCC
10004-00200	KY1126	7922FIL	PV080R1L1T1NKLC
10004-00240	KY1126	7924FIL	PV080R1L1T1NMFC
10004-00240	KY1127	7924FIL	PV080R1L1T1NMMC
10004-00250	KY1127	7926 05 06	PV080R1L1T1NMMW
10004-00250	KY1127	7926 05 08	PV080R1L1T1NMRC
10004-00270	KY1127	7926 07 10	PV080R1L1T1NTCC
10004-00270	KY1128	7927FIL	PV080R1L1T1NUPM
10004-00280	KY1128	7927FIL	PV080R1L4CDNUPM
10004-00280	KY1129	7928FIL	PV080R1L4T1NUPM
10004-00300	KY1129	7928FIL	PV080R2L1T1WMMWK0080
10004-00300	KY1130	7929FIL	PV080R9K1T1NMRCK0224
10004-00340	KY1130	7929FIL	PV092B9K1T1NX5861
10004-00340	KY1131	792TC-12	PV092B9K1T1NX5862
10004-00350	KY1131	792TC-16	PV092B9K1T1NX5863
10004-00350	KY1131	7930 10 10	PV092B9K1T1NX5865
10004-00380	KY1131	7930 13 13	PV092B9K1T1NX5875
10004-00380	KY1132	7930 19 19	PV092L1L1B1NUCC
10004-00400	KY1132	7930 21 21	PV092R1D1T1NMFC
10004-00400	KY1133	7930FIL	PV092R1D1T1NMMC
10004-00410	KY1133	7930FIL	PV092R1D1T1VMMC
10004-00410	KY1134	7931 10 10	PV092R1D1T1VMRC
10004-00500	KY1134	7931 13 13	PV092R1K1A1NMRC
10004-00500	KY1139	7931 17 17	PV092R1K1AYNMFC
10004-00520	KY1139	7931FIL	PV092R1K1AYNMLC
10004-00520	KY1140	7931FIL	PV092R1K1AYNMMC
10004-00550	KY1140	7932 10 10	PV092R1K1AYNMRC
10004-00550	KY1152	7932 17 17	PV092R1K1B1NMFW
10004-00600	KY1152	7932 21 21	PV092R1K1BBNMF1
10004-00600	KY2007	7932FIL	PV092R1K1BBNMMC
10004-00650	KY2007	7932FIL	PV092R1K1G1NMMW
10004-00650	KY2007	7934FIL	PV092R1K1JHNMCK
10004-00700	KY2007	7934FIL	PV092R1K1JHNMMC
10004-00700	KY2008	7937FIL	PV092R1K1JHNMMW
10004-00750	KY2008	7937FIL	PV092R1K1KJNMFZ
10004-00750	KY2010	7937FIL	PV092R1K1KJNMMW
10004-00765	KY2010	7937FIL	PV092R1K1KJNMMZ
10004-00765	KY2010	7938FIL	PV092R1K1LKNMFB
10004-00769	KY2010	7938FIL	PV092R1K1LKNMFC

10004-00769	KY2011	7939FIL	PV092R1K1T1N001
10004-00800	KY2011	7939FIL	PV092R1K1T1N100
10004-00800	KY2011	7951FIL	PV092R1K1T1NFPV
10004-00840	KY2011	7951FIL	PV092R1K1T1NGCC
10004-00840	KY2012	7952FIL	PV092R1K1T1NGL1
10004-00850	KY2012	7952FIL	PV092R1K1T1NGLC
10004-00850	KY2012	7954FIL	PV092R1K1T1NGLW
10004-00900	KY2012	7954FIL	PV092R1K1T1NHCCX5947
10004-00900	KY2013	7959FIL	PV092R1K1T1NHL1
10004-00914	KY2013	7959FIL	PV092R1K1T1NHLB
10004-00914	KY2013	7960 05 06	PV092R1K1T1NHLC
10004-00925	KY2013	7960 05 08	PV092R1K1T1NHLW
10004-00925	KY2014	7960 07 10	PV092R1K1T1NKC1
10004-01000	KY2014	7961 05 10	PV092R1K1T1NKCC
10004-01000	KY2015	7961 05 13	PV092R1K1T1NKCCX5891
10004-01100	KY2015	7961 07 13	PV092R1K1T1NKCCX5947
10004-01100	KY2030	7961 07 17	PV092R1K1T1NKLC
10004-01150	KY2030	7961FIL	PV092R1K1T1NKLZ
10004-01150	KY2032	7961FIL	PV092R1K1T1NMC1
10004-01200	KY2032	7962FIL	PV092R1K1T1NMCB
10004-01200	KY2033	7962FIL	PV092R1K1T1NMCC
10004-01300	KY2033	7970 10 10	PV092R1K1T1NMF1
10004-01300	KY2034	7970 13 13	PV092R1K1T1NMFB
10004-01370	KY2034	7970 17 17	PV092R1K1T1NMFC
10004-01370	KY2035	7970 19 19	PV092R1K1T1NMFZ
10004-01400	KY2035	7970 21 21	PV092R1K1T1NML1
10004-01400	KY2058	7970 27 27	PV092R1K1T1NMLC
10004-01500	KY2058	7970 34 34	PV092R1K1T1NMLK
10004-01500	KY2058	7970FIL	PV092R1K1T1NMLW
10004-01600	KY2058	7970FIL	PV092R1K1T1NMM1
10004-01600	KY2059	7971 10 10	PV092R1K1T1NMMC
10004-01650	KY2059	7971 13 13	PV092R1K1T1NMMK
10004-01650	KY2097	7971 17 17	PV092R1K1T1NMMW
10004-01660	KY2097	7971 21 21	PV092R1K1T1NMMZ
10004-01660	KY2098	7971FIL	PV092R1K1T1NMR1
10004-01700	KY2098	7971FIL	PV092R1K1T1NMRC
10004-01700	KY2217	7972FIL	PV092R1K1T1NMRK
10004-01800	KY2217	7972FIL	PV092R1K1T1NMRZ
10004-01800	KY2260	7973FIL	PV092R1K1T1NMT1
10004-01860	KY2260	7973FIL	PV092R1K1T1NSCC
10004-01860	KY2260	7974FIL	PV092R1K1T1NSL1
10004-02060	KY2260	7974FIL	PV092R1K1T1NSLC
10004-02060	KY2330	7975FIL	PV092R1K1T1NSLK
10004-02300	KY2330	7975FIL	PV092R1K1T1NSLZ
10004-02300	KY3018	7975-MVO	PV092R1K1T1NTCC
10004-02520	KY3018	7975-MVO	PV092R1K1T1NTCZ
10004-02520	KY3076	7977FIL	PV092R1K1T1NTL1
10004-03000	KY3076	7977FIL	PV092R1K1T1NTLC
10004-03000	KY3077	7979FIL	PV092R1K1T1NTLK
10005FIL	KY3077	7979FIL	PV092R1K1T1NTLZ
10005FIL	KY3081	797TC-10	PV092R1K1T1NUCC
10007FIL	KY3081	797TC-12	PV092R1K1T1NUCZ
10007FIL	KY3213	797TC-16	PV092R1K1T1NULB

10008FIL	KY3213	797TC-20	PV092R1K1T1NULC
10008FIL	KY3214	797TC-8	PV092R1K1T1NUPF
10009FIL	KY3214	7980FIL	PV092R1K1T1NUPK
10009FIL	KY3217	7980FIL	PV092R1K1T1NUPM
10009FIL	KY3217	79812MA	PV092R1K1T1NUPP
10009FIL	KY3218	7981FIL	PV092R1K1T1NUPR
1000FH10	KY3218	7981FIL	PV092R1K1T1NWCC
1000FH2	KY3219	7982 11 11	PV092R1K1T1NWLC
1000FH30	KY3219	7982 14 14	PV092R1K1T1VMMC
1000FH3122	KY3219	7982 18 18	PV092R1K1T1VMMW
1000FH3242	KY3219	7982 22 22	PV092R1K1T1VMMZ
1000FH32430	KY3235	7982FIL	PV092R1K1T1VMRC
1000MA30	KY3235	7982FIL	PV092R1K1T1WMFC
1000MAM30	KY3237	7983FIL	PV092R1K1T1WMMC
1000-QC	KY3237	7983FIL	PV092R1K1T1WMMW
10010 EP	KY3240	7984 04 10	PV092R1K1T1WMMZX5807
10010 EP	KY3240	7984 04 19	PV092R1K1T1WMR1
10010 RV	KY3241	7984 06 10	PV092R1K4T1NFPV
10010 RVUV	KY3241	7984 06 13	PV092R1K4T1NMFB
10010 UV	KY3244	7984 08 10	PV092R1K4T1NMMC
10010 UV	KY3244	7984 08 13	PV092R1K4T1NMMW
10010 V	KY3244	7984 10 17	PV092R1K4T1NMMZ
10010 V	KY3244	7984 12 17	PV092R1K4T1NMR1
10010 VUV	KY4065	7984 12 21	PV092R1K4T1NSLK
10010 VUV	KY4065	7984FIL	PV092R1K4T1NTCC
10010FIL	KY4066	7984FIL	PV092R1K4T1NTCCX5887
10010FIL	KY4066	7985 04 10	PV092R1K4T1NUPF
10011 RFV	KY4086	7985 06 10	PV092R1K4T1NUPM
10011 RV	KY4086	7985 06 13	PV092R1K4T1WMFB
10011 RV	KY4093	7985 08 10	PV092R1K4T1WMFC
10011 V	KY4093	7985 08 13	PV092R1K4T1WMFK
10011 V	KY4094	7985 10 17	PV092R1K4T1WMFW
10011-QC	KY4094	7985 12 17	PV092R1K4T1WMM1
100-130100	KY4705	7985 12 21	PV092R1K4T1WMMK
1001L08 01 05	KY4705	7985FIL	PV092R1L1T1NKCCX5891
1001P00 00 79	KY5637	7985FIL	PV092R1L1T1NKCWX5947
1001P00 00 80	KY5637	7986FIL	PV092R1L1T1NMFB
1001P00 01 48	KY5739	7986FIL	PV092R1L1T1NMFC
1001P00 01 54	KY5739	7988FIL	PV092R1L1T1NMMC
1001P00 02 43	KY5782	7988FIL	PV092R1L1T1NMMZ
1001P00 02 44	KY5782	7989FIL	PV092R1L1T1NSCCX5947
1001P00 02 45	KY5782	7989FIL	PV092R1L1T1NSLWX5947
1001P00 02 46	KY5782	7990FIL	PV092R1L1T1NTCCX5947
1001P00 02 47	KY6132	7990FIL	PV092R1L1T1NUPR
1001P00 02 52	KY6132	7992 56 00WP2	PV092R9K1T1NKLCK0006
1001P00 02 53	KY6132	7992 56 00WP3	PV092R9K1T1NMFBK0323
1001P00 02 54	KY6132	7992 60 00WP2	PV092R9K1T1VMMWK0080
1001P00 02 55	KY6133	7992 60 00WP3	PV092R9K1T1VMMWK0349
1001P00 02 56	KY6133	7994 04 10	PV092R9K4KJWMRCX5918
1001P00 02 57	KY6133	7994 04 19	PV092R9K4T1WMMCX5918K0184
1001P00 02 58	KY6133	7994 06 10	PV092R9K4T1WMRCX5918K0184
1001P00 02 59	KY6134	7994 06 13	PV13/08
1001P00 02 60	KY6134	7994 08 10	PV13/10

1001P00 02 61	KY6134	7994 08 13	PV140L1G1T1NTCC
1001P00 02 62	KY6134	7994 10 17	PV140L1K1T1NMFC
1001P00 02 63	KY6135	7994 10 75	PV140L1K1T1NMLC
1001P00 02 65	KY6135	7994 12 17	PV140L1K1T1NMMC
1001P00 02 66	KY6135	7994 12 21	PV140L1K1T1NMMZ
1001P00 02 93	KY6135	7994FIL	PV140L1K1T1NMRC
1001P00 03 00	KY6136	7994FIL	PV140L1L1B1NWCC
1001P00 03 01	KY6136	7995 04 10	PV140L1L1T1NWCC
1001P00 03 02	KY6138	7995 06 10	PV140L1L4T1NMFC
1001P00 03 03	KY6138	7995 06 13	PV140L9G1T1NMFCK0074
1001P06 00	KY6138	7995 08 10	PV140R1F1T1NMCC
1001P06V01	KY6138	7995 08 13	PV140R1F1T1NMMC
1001T06 00	KY6139	7995 10 17	PV140R1F1T1NMMCX5899
1001U00 00 81	KY6139	7995 12 17	PV140R1F1T1NMRC
1001U00 00 91	KY6139	7995 12 21	PV140R1G1T1NMFC
1001U00 01 31	KY6139	7995FIL	PV140R1K1AYNUPR
1001Y00 00 01	KY6140	7995FIL	PV140R1K1B1NUPM
10020 EP	KY6140	7996 04 00	PV140R1K1BBNMFC
10020 EP	KY6140	7996 06 00	PV140R1K1BBNMTKX5939
10020 RUV	KY6140	7996 08 00	PV140R1K1JHNMMW
10020 RV	KY6141	7996 10 00	PV140R1K1KJNMRC
10020 UV	KY6141	7996 12 00	PV140R1K1LKNMMW
10020 UV	KY6141	7999FIL	PV140R1K1T1N001
10020 V	KY6141	7999FIL	PV140R1K1T1N100
10020 V	KY6142	799FIL	PV140R1K1T1NFPV
10020FIL	KY6142	799FIL	PV140R1K1T1NKCB
10020FIL	KY6144	7-A-032	PV140R1K1T1NKCC
10021 RFV	KY6144	7-A-165	PV140R1K1T1NKLB
10021 RV	KY6145	7-A-500	PV140R1K1T1NKLC
10021 RV	KY6145	7GRP02	PV140R1K1T1NMC1
10021 V	KY6145	7GRP02	PV140R1K1T1NMCC
10021 V	KY6145	7K217	PV140R1K1T1NMCCX5947
100-2110AR	KY6146	7K217	PV140R1K1T1NMCK
100-2110AR	KY6146	7K4129	PV140R1K1T1NMCW
10021FIL	KY6147	7K501	PV140R1K1T1NMF1
10021FIL	KY6147	7K501	PV140R1K1T1NMFC
10022FIL	KY6147	7K502	PV140R1K1T1NMFK
10022FIL	KY6147	7K502	PV140R1K1T1NMFZ
10023FIL	KY6148	7K517	PV140R1K1T1NML1
10023FIL	KY6148	7K517	PV140R1K1T1NMLB
10025AFIL	KY6148	7K520	PV140R1K1T1NMLC
10025AFIL	KY6148	7K520	PV140R1K1T1NMLW
10025EFIL	KY6149	7K522	PV140R1K1T1NMLZ
10025EFIL	KY6149	7K522	PV140R1K1T1NMM1
10025FIL	KY6149	7K801	PV140R1K1T1NMMC
10025FIL	KY6149	7K801	PV140R1K1T1NMMK
10026FIL	KY6150	7K803	PV140R1K1T1NMMW
10026FIL	KY6150	7K803	PV140R1K1T1NMMZ
100-2773-01	KY6150	7K808	PV140R1K1T1NMR1
100-2774-01	KY6150	7K808	PV140R1K1T1NMRC
10027FIL	KY6151	7K815	PV140R1K1T1NMRZ
10027FIL	KY6151	7K815	PV140R1K1T1NMT1
10028FIL	KY6151	7KG10	PV140R1K1T1NSC1

10028FIL	KY6151	7KG10	PV140R1K1T1NSCB
1002FH10	KY6152	7KH01	PV140R1K1T1NSCC
1002FH30	KY6152	7KH01	PV140R1K1T1NSCCX5947
1002FIL	KY6153	7KRAW26IW26	PV140R1K1T1NSCZ
1002FIL	KY6153	7KRAW26IW26	PV140R1K1T1NSLB
1002MAM30	KY6153	7KRAW26IW2690	PV140R1K1T1NSLC
10030FIL	KY6153	7KRAW26IW2690	PV140R1K1T1NSLK
10030FIL	KY6154	7X0871	PV140R1K1T1NSLW
10031FIL	KY6154	8 ALOK-316-SET	PV140R1K1T1NTC1
10031FIL	KY6156	8 ALOK-6MO-SET	PV140R1K1T1NTCC
10032FIL	KY6156	8 ALOK-B-SET	PV140R1K1T1NTCZ
10032FIL	KY6156	8 ALOK-M-SET	PV140R1K1T1NTLC
100-3395-01	KY6156	8 AOEG5-S	PV140R1K1T1NTLW
10033FIL	KY6157	8 AOEL6-S	PV140R1K1T1NUC1
10033FIL	KY6157	8 AOG5JG5-S	PV140R1K1T1NUCC
10034FIL	KY6157	8 BAR HANDLE	PV140R1K1T1NUL1
10034FIL	KY6157	8 BL-S	PV140R1K1T1NULB
10035FIL	KY6158	8 BL-SS	PV140R1K1T1NULC
10035FIL	KY6158	8 BODY DIE	PV140R1K1T1NULW
10039FIL	KY6158	8 BTX-B	PV140R1K1T1NUPK
10039FIL	KY6158	8 BTX-S	PV140R1K1T1NUPM
1003FIL	KY6159	8 BTX-SS	PV140R1K1T1NUPR
1003FIL	KY6159	8 BUHLO-S	PV140R1K1T1NWCB
10-040	KY6159	8 BU-S	PV140R1K1T1NWCC
100-40	KY6159	8 BU-SS	PV140R1K1T1NWCK
100-40	KY6185	8 BZ-B	PV140R1K1T1NWL1
10041FIL	KY6185	8 BZP-SS	PV140R1K1T1NWLC
10041FIL	KY6185	8 BZ-SS	PV140R1K1T1NWLW
10042FIL	KY6185	8 C5BU-S	PV140R1K1T1NYCC
10042FIL	KY6364	8 C5OLO-S	PV140R1K1T1NYL1
10043FIL	KY6364	8 C5OX-S	PV140R1K1T1NYLC
10043FIL	KY6365	8 C6BU-S	PV140R1K1T1NYLK
10046-10C	KY6365	8 C6LO-S	PV140R1K1T1NZC1
10046-10-MP	KY6365	8 C6X-B	PV140R1K1T1NZCB
10046-12C	KY6365	8 C6X-S	PV140R1K1T1NZCC
10046-12-MP	KY6366	8 C6X-SS	PV140R1K1T1NZL1
10046-16C	KY6366	8 CBU-S	PV140R1K1T1NZLC
10046-16-MP	KY6366	8 CC5OLO-S	PV140R1K1T1NZLW
10046-4C	KY6366	8 CC5OX-S	PV140R1K1T1VFPV
10046-4-MP	KY6367	8 CCCTX-S	PV140R1K1T1VMMC
10046-5C	KY6367	8 CCTX-S	PV140R1K1T1VMR1
10046-5-MP	KY6367	8 CLO-S	PV140R1K1T1VYCC
10046-6C	KY6367	8 CP-625	PV140R1K1T1WMCC
10046-6-MP	KY6369	8 CP-B	PV140R1K1T1WMCK
10046-8C	KY6369	8 CP-HC	PV140R1K1T1WMFC
10046-8-MP	KY6369	8 CPI-SS-SET	PV140R1K1T1WMMC
10046FIL	KY6369	8 CP-M	PV140R1K1T1WMMW
10046FIL	KY6371	8 CP-SS	PV140R1K1T1WSCC
1004-74M	KY6371	8 CP-SSHP	PV140R1K1T1WUCC
10048-10C	KY6372	8 CTX-B	PV140R1K1T1WULC
10048-10-MP	KY6372	8 DBU-S	PV140R1K4C1NUPR
10048-12C	KY6373	8 DI FRIT-10MIC-SS	PV140R1K4LLNULK
10048-12-MP	KY6373	8 DI FRIT-2MIC-SS	PV140R1K4T1N001

10048-16C	KY6374	8 DI FRIT-5MIC-SS	PV140R1K4T1NFPV
10048-16-MP	KY6374	8 DTX-S	PV140R1K4T1NMMC
10048-4C	KY6377	8 DTX-SS	PV140R1K4T1NMT2X5939
10048-4-MP	KY6377	8 EBU-S	PV140R1K4T1NSL1
10048-5C	KY6379	8 EBU-SS	PV140R1K4T1NTL1
10048-5-MP	KY6379	8 ELO-S	PV140R1K4T1NUL1
10048-6C	KY6447	8 EW-SS	PV140R1K4T1NUPM
10048-6-MP	KY6447	8 F5BU-S	PV140R1K4T1NUPR
10048-8C	KY6447	8 F5OHAO-S	PV140R1K4T1NWL1
10048-8-MP	KY6447	8 F5OLO-S	PV140R1K4T1NWLZ
10049-4-MP	KY6448	8 F5OX-S	PV140R1K8T1NMMC
10049-5-MP	KY6448	8 F5X-S	PV140R1L1T1NMCCX5947
10049-6-MP	KY6448	8 F65OL-S	PV140R1L1T1NMCWX5947
10049-8-MP	KY6448	8 F65OX-S	PV140R1L1T1NMFC
1004FIL	KY6449	8 F6X-S	PV140R1L1T1NMM1
1004FIL	KY6449	8 FBU-S	PV140R1L1T1NMMW
10051FIL	KY6450	8 FBU-SS	PV140R1L1T1NMRC
10051FIL	KY6450	8 FERRULE HOLDER	PV140R1L1T1NSCC
10052FIL	KY6450	8 FF5OLO-S	PV140R1L1T1NSCCX5947
10052FIL	KY6450	8 FF5OX-S	PV140R1L1T1NUPK
10054FIL	KY6451	8 FLO-S	PV140R1L1T1NWCC
10054FIL	KY6451	8 FLO-SS	PV140R1L4T1NMT2X5939
10056FIL	KY6451	8 FNLBA-S	PV140R1L4T1NMTP
10056FIL	KY6451	8 FNL-S	PV140R1L4T1NTLK
10057FIL	KY6453	8 FNTX-B	PV140R1L4T1NUPM
10057FIL	KY6453	8 FNTX-S	PV140R1L4T1NUPR
10058-01	KY6455	8 FNTX-SS	PV140R9K1AYNWLWX5806K0383
10058FIL	KY6455	8 FNU-S	PV140R9K1JHNMCCK0025
10058FIL	KY6455	8 FNZ-B	PV140R9K1T1NMFBK0011
10059-04	KY6455	8 FNZ-SS	PV140R9K1T1NMFBK0322
1005FIL	KY6456	8 FTX-S	PV140R9K1T1NMFCK0011
1005FIL	KY6456	8 FW-SS	PV140R9K1T1NMMCK0025
1005T04 00 25	KY6457	8 FX-B	PV140R9K1T1NMMWK0011
1005T06 00	KY6457	8 FX-SS	PV140R9K1T1NMRCK0072
1005T08 00	KY6458	8 FX-SSHP	PV140R9K1T1NSLCX5918K0003
1005T10 00	KY6458	8 G5G5JG5-S	PV140R9K1T1NSLKK0320
1005T12 00	KY6459	8 G6X-S	PV140R9K1T1NTLZK0072
1005X-03	KY6459	8 G6X-SS	PV140R9K1T1NWCCK0369
1005X-05	KY6460	8 GAP GAUGE	PV140R9K1T1NWLCK0390
1005X-08	KY6460	8 GTX-S	PV140R9K1T1WMCCK0059
10062-00400	KY6460	8 GW-SS	PV140R9K1T1WSCCK0072
10062-00400	KY6460	8 HBU-S	PV140R9K4T1NMFCK0088
10062-00760	KY6461	8 HBU-SS	PV140R9K4T1NZCBK0154
10062-00760	KY6461	8 HL6-S	PV140R9K4T1WMMCX5918K0168
10062-00850	KY6461	8 HLO-S	PV17/12
10062-00850	KY6461	8 HP5ON-S	PV17/13S
10062-02000	KY6462	8 HP5ON-S BPNB	PV17/15
10062-02000	KY6462	8 HP5ON-S V0894	PV180L1G8T1NZLC
10063-00140	KY6462	8 HP5ON-SS	PV180L1K1T1NWLW
10063-00140	KY6462	8 HTX-S	PV180R1F1T1NMMCX5899
10063-00206	KY6463	8 HW-SS	PV180R1K1A1NUPR
10063-00206	KY6463	8 HX6-S	PV180R1K1BBNMTKX5939
10063-00350	KY6464	8 JBU-S	PV180R1K1BBNUPM

10063-00350	KY6464	8 JBU-SS	PV180R1K1KJNMFB
10063-00375	KY6465	8 JTX-B	PV180R1K1LKNMMC
10063-00375	KY6465	8 JTX-S	PV180R1K1LLNUPR
10063-00400	KY6466	8 JW-SS	PV180R1K1T1N001
10063-00400	KY6466	8 JX6-S	PV180R1K1T1N100
10063-00500	KY6466	8 KBZ-SS	PV180R1K1T1N2CC
10063-00500	KY6466	8 KLO-S	PV180R1K1T1N2L1
10063-00550	KY6467	8 KTX-B	PV180R1K1T1N2LC
10063-00550	KY6467	8 KTX-S	PV180R1K1T1NFPV
10063-00565	KY6468	8 KTX-SS	PV180R1K1T1NMC1
10063-00565	KY6468	8 KW-SS	PV180R1K1T1NMCC
10063-00570	KY6540	8 LHBU-S	PV180R1K1T1NMCW
10063-00570	KY6540	8 LOHB3-S	PV180R1K1T1NMFC
10063-00580	KY6541	8 LOHB3-SS	PV180R1K1T1NMFK
10063-00580	KY6541	8 LOHX6-S	PV180R1K1T1NMLC
10063-00600	KY6542	8 MDF-6MO	PV180R1K1T1NMLZ
10063-00600	KY6542	8 MDF-M	PV180R1K1T1NMM1
10063-00640	KY6542	8 MDF-SS	PV180R1K1T1NMMC
10063-00640	KY6542	8 MPBF-SS	PV180R1K1T1NMMK
10063-00690	KY6593	8 MPFF-SS	PV180R1K1T1NMMW
10063-00690	KY6593	8 MTX-S	PV180R1K1T1NMMZ
10063-00760	KY6667	8 MTX-SS	PV180R1K1T1NMR1
10063-00760	KY6667	8 NUT DIE	PV180R1K1T1NMRC
10063-00800	KY6816	8 OTX-S	PV180R1K1T1NMRCX5866
10063-00800	KY6816	8 OTX-SS	PV180R1K1T1NMRK
10063-00850	KY6862	8 P5ON-S	PV180R1K1T1NMRZX5899
10063-00850	KY6862	8 P5ON-S V0894	PV180R1K1T1NMT1
10063-00860	KY6862	8 PANEL NUT-SS	PV180R1K1T1NMTP
10063-00860	KY6862	8 PH-625	PV180R1K1T1NSCC
10063-00880	KY6863	8 PH-625-NC	PV180R1K1T1NSCCX5947
10063-00880	KY6863	8 PH-6MO	PV180R1K1T1NSLC
10063-00900	KY6863	8 PH-6MONC	PV180R1K1T1NSLK
10063-00900	KY6863	8 PH-B	PV180R1K1T1NTCC
10063-00950	KY6864	8 PH-D1	PV180R1K1T1NTLC
10063-00950	KY6864	8 PH-HC	PV180R1K1T1NTLZ
10063-01000	KY6864	8 PHH-SS	PV180R1K1T1NUC1
10063-01000	KY6864	8 PH-M	PV180R1K1T1NUCC
10063-01100	KY6866	8 PH-S	PV180R1K1T1NUL1
10063-01100	KY6866	8 PH-SS	PV180R1K1T1NULC
10063-01200	KY6866	8 PH-SSHP	PV180R1K1T1NUPF
10063-01200	KY6866	8 PH-SS-NC	PV180R1K1T1NUPK
10063-01264	KY6867	8 PH-TI	PV180R1K1T1NUPM
10063-01264	KY6867	8 PNBMP7-SS	PV180R1K1T1NUPR
10063-01270	KY6868	8 PNBZ-B	PV180R1K1T1NWCB
10063-01270	KY6868	8 PNBZ-SS	PV180R1K1T1NWCC
10063-01450	KY6875	8 PNLOBA-S	PV180R1K1T1NWL1
10063-01450	KY6875	8 PNLO-S	PV180R1K1T1NWLC
10063-01470	KY6875	8 R5BU-S	PV180R1K1T1NYCC
10063-01470	KY6875	8 R5OLO-S	PV180R1K1T1NYLC
10063-01475	KY6896	8 R5OX-S	PV180R1K1T1NYLK
10063-01475	KY6896	8 R6BU-S	PV180R1K1T1NYLW
10063-01530	KY6952	8 R6LO-S	PV180R1K1T1NYLZ
10063-01530	KY6952	8 R6X-S	PV180R1K1T1NZCC

10063-01550	KY6952	8 R6X-SS	PV180R1K1T1NZLC
10063-01550	KY6952	8 RTX-S	PV180R1K1T1NZLW
10063-01640	KY6953	8 RTX-SS	PV180R1K1T1VMFC
10063-01640	KY6953	8 S5BU-S	PV180R1K1T1VMM1
10063-01700	KY6953	8 S5OLO-S	PV180R1K1T1VMMC
10063-01700	KY6953	8 S5OX-SS	PV180R1K1T1VZCC
10063-01750	KY6954	8 S6BU-S	PV180R1K1T1WMMC
10063-01750	KY6954	8 S6LO-S	PV180R1K1T1WMMW
10063-01800	KY7001	8 S6LO-S PLUG	PV180R1K1T1WSCC
10063-01800	KY7001	8 S6X-SS	PV180R1K1T1WULC
10063-01940	KY7014	8 SBR	PV180R1K4T1N001
10063-01940	KY7014	8 SBU-S	PV180R1K4T1N100
10063-02300	KY7017	8 STX-S	PV180R1K4T1NFPV
10063-02300	KY7017	8 STX-SS	PV180R1K4T1NMFB
10063-02350	KY7018	8 TIZ .250-SS	PV180R1K4T1NMFC
10063-02350	KY7018	8 TIZ .375-B	PV180R1K4T1NMM1
10063-02480	KY7019	8 TIZ .375-SS	PV180R1K4T1NMMC
10063-02480	KY7019	8 TL-S	PV180R1K4T1NMMW
10063-02500	KY7020	8 TL-SS	PV180R1K4T1NSCC
10063-02500	KY7020	8 TPL-S	PV180R1K4T1NTCK
10063-02600	KY7088	8 TPL-S BP	PV180R1K4T1NUPM
10063-02600	KY7088	8 TPL-SS	PV180R1K4T1NUPR
10063-02700	KY7089	8 TU-S	PV180R1K4T1NYL1
10063-02700	KY7089	8 TU-SS	PV180R1K4T1NYLZ
10063-03000	KY7098	8 TX-B	PV180R1K8T1NMMC
10063-03000	KY7098	8 TX-S	PV180R1L1D1NUPR
10063-03240	KY7110	8 TX-S BP	PV180R1L1T1NFPV
10063-03240	KY7110	8 TX-SS	PV180R1L1T1NFPVX5937
10064-00140	KY7118	8 TZ-B	PV180R1L1T1NMFC
10064-00140	KY7118	8 TZ-SS	PV180R1L1T1NMMZ
10064-00300	KY7119	8 TZ-T	PV180R1L1T1NSCC
10064-00300	KY7119	8 TZ-ZY	PV180R1L1T1NSCCX5947
10064-00375	KY7169	8 V5OLO-S	PV180R1L1T1NSLWX5947
10064-00375	KY7169	8 V5OX-S	PV180R1L1T1NTLWX5947
10064-00400	KY7174	8 V5OX-SS	PV180R1L1T1NUPR
10064-00400	KY7174	8 V6LO-S	PV180R1L1T1NZLC
10064-00500	KY7182	8 V6X-S	PV180R1L4T1NFPV
10064-00500	KY7182	8 V6X-SS	PV180R1L4T1NMFB
10064-00550	KY7214	8 VTX-S	PV180R1L4T1NMFC
10064-00550	KY7214	8 VTX-SS	PV180R9K1B1NZCCK0008
10064-00565	KY7224	8 WBU-S	PV180R9K1T1NMM1K0038
10064-00565	KY7224	8 WBU-SS	PV180R9K1T1NMMCK0028
10064-00570	KY7224	8 WEBU-S	PV180R9K1T1NMMCK0149
10064-00570	KY7224	8 WELO-S	PV180R9K1T1NMMCK0151
10064-00580	KY7250	8 WELO-WLNL-S	PV180R9K1T1NWCCK0217
10064-00580	KY7250	8 WETX-S	PV180R9K1T1NWLKK0403
10064-00600	KY7296	8 WETX-WLN-SS	PV180R9K1T1NYCCK0217
10064-00600	KY7296	8 WF5OLO-WLNL-S	PV180R9K1T1NYLCK0190
10064-00640	KY7297	8 WGTX-S	PV180R9K1T1NZL1K0072
10064-00640	KY7297	8 WGTX-SS	PV180R9K1T1PMFCK0028
10064-00650	KY7321	8 WGTX-WLN-S	PV180R9K1T1VMMCK0013
10064-00650	KY7321	8 WJJLO-S	PV180R9K1T1VMMCK0200
10064-00700	KY7324	8 WJJLO-WLNL-S	PV180R9K1T1VMMWK0013

10064-00700	KY7324	8 WJJTX-WLN-S	PV180R9K4KJWMR1K0200
10064-00775	KY7369	8 WJLO-S	PV180R9K4T1NMM1K0030
10064-00775	KY7369	8 WJLO-WLNL-S	PV270L1K1C1NZLC
10064-00800	KY7379	8 WJTX-WLN-S	PV270L1L1T1N2LBX5943
10064-00800	KY7379	8 WLNL-S	PV270L1L1T1NMF1
10064-00830	KY7432	8 WLN-S CF	PV270L1L1T1NMR1
10064-00830	KY7432	8 WLO-S	PV270L9L1T1N2LBX5943K0400
10064-00850	KY7433	8 WLO-WLNL-S	PV270R1K1B1NMFC
10064-00850	KY7433	8 WLZ-SS	PV270R1K1B1NUPM
10064-00860	KY7437	8 WNLO-S	PV270R1K1KJNZL1
10064-00860	KY7437	8 WNLO-WLNL-S	PV270R1K1LKNUPM
10064-00950	KY7447	8 WNTX-WLN-S	PV270R1K1LLNYL1
10064-00950	KY7447	8 WTX-B	PV270R1K1MMNUPM
10064-00981	KY7449	8 XHL6-S	PV270R1K1T1N001
10064-00981	KY7449	8 XHLO-S	PV270R1K1T1N2C1
10064-01000	KY7451	8000/CB/00	PV270R1K1T1N2CB
10064-01000	KY7451	8000/PB/00	PV270R1K1T1N2CC
10064-01020	KY7453	800-003100	PV270R1K1T1N2LC
10064-01020	KY7453	800-003102	PV270R1K1T1N3CC
10064-01100	KY7464	800-003103	PV270R1K1T1N3LC
10064-01100	KY7464	800-003104	PV270R1K1T1NFPV
10064-01250	KY7483	800-003105	PV270R1K1T1NMFB
10064-01250	KY7483	800-003106	PV270R1K1T1NMFC
10064-01264	KY7484	800-003107	PV270R1K1T1NMMC
10064-01264	KY7484	800-003108	PV270R1K1T1NMMK
10064-01270	KY7489	800-030050	PV270R1K1T1NMMW
10064-01270	KY7489	800-030051	PV270R1K1T1NMMZ
10064-01400	KY7494	800-030056	PV270R1K1T1NMR1
10064-01400	KY7494	800-030057	PV270R1K1T1NMRC
10064-01450	KY7496	800-030058	PV270R1K1T1NMT1
10064-01450	KY7496	800-030062	PV270R1K1T1NTCC
10064-01470	KY7501	800-030063	PV270R1K1T1NTLC
10064-01470	KY7501	800-030064	PV270R1K1T1NTLW
10064-01475	KY7502	80005-05	PV270R1K1T1NUCC
10064-01475	KY7502	8002FIL	PV270R1K1T1NUCK
10064-01530	KY7503	8002FIL	PV270R1K1T1NUL1
10064-01530	KY7503	8010-5	PV270R1K1T1NULC
10064-01550	KY7521	8010FIL	PV270R1K1T1NUPF
10064-01550	KY7521	8010FIL	PV270R1K1T1NUPK
10064-01640	KY7590	801-10-BLK-RL	PV270R1K1T1NUPM
10064-01640	KY7590	801-10-BLU-RL	PV270R1K1T1NUPR
10064-01700	KY7608	801-10-GRA-RL	PV270R1K1T1NWC1
10064-01700	KY7608	801-10-GRN-RL	PV270R1K1T1NWCC
10064-01750	KY7658	801-10-RED-RL	PV270R1K1T1NWL1
10064-01750	KY7658	801-12-BLK-RL	PV270R1K1T1NWLB
10064-01800	KY7707	801-12-BLU-RL	PV270R1K1T1NWLC
10064-01800	KY7707	801-12-GRA-RL	PV270R1K1T1NWLZ
10064-01940	KY7750	801-12-GRN-RL	PV270R1K1T1NYC1
10064-01940	KY7750	801-12-RED-RL	PV270R1K1T1NYCB
10064-02050	KY7751	801-16-BLK-RL	PV270R1K1T1NYCC
10064-02050	KY7751	801-16-BLU-RL	PV270R1K1T1NYL1
10064-02300	KY7755	801-16-GRA-RL	PV270R1K1T1NYLB
10064-02300	KY7755	801-16-GRN-RL	PV270R1K1T1NYLC

10064-02350	KY7792	801-16-RED-RL	PV270R1K1T1NZCC
10064-02350	KY7792	801-4-BLK-RL	PV270R1K1T1NZL1
10064-02480	KY7808	801-4-BLU-RL	PV270R1K1T1NZLC
10064-02480	KY7808	801-4-GRA-RL	PV270R1K1T1NZLW
10064-02500	KY7969	801-4-GRN-RL	PV270R1K1T1NZLZ
10064-02500	KY7969	801-4-RED-RL	PV270R1K1T1V2LC
10064-02600	KY8007	801-6-BLK-RL	PV270R1K1T1V3LC
10064-02600	KY8007	801-6-BLU-RL	PV270R1K1T1VMMC
10064-03000	KY8010	801-6-GRA-RL	PV270R1K1T1VYLC
10064-03000	KY8010	801-6-GRN-RL	PV270R1K1T1WMMC
10064-03240	KY8011	801-6-RED-RL	PV270R1K1T1WMMZ
10064-03240	KY8011	801-8-BLK-RL	PV270R1K1T1WUPR
10064-03300	KY8012	801-8-BLU-RL	PV270R1K1T1WWLB
10064-03300	KY8012	801-8-GRA-RL	PV270R1K1T1WYLK
10064-04000	KY8153	801-8-GRN-RL	PV270R1L1CEN2LBX5943
10064-04000	KY8153	801-8-RED-RL	PV270R1L1M1NUPMX5899
10064-04250	KY8177	80-2110AR	PV270R1L1T1N3LC
10064-04250	KY8177	80-2110AR	PV270R1L1T1NFPV
10064-10-MP	KY8243	802-7587A	PV270R1L1T1NMFC
10064-12-MP	KY8243	80-2800D	PV270R1L1T1NUCCX5947
10064-16-MP	KY8350	80-2800R0350	PV270R1L1T1NUCWX5947
10064-4-MP	KY8350	80-2800T	PV270R1L1T1NUPM
10064-5-MP	KY8373	802-8201-08	PV270R1L1T1NUPMX5888
10064-6-MP	KY8373	802-8201B	PV270R1L1T1NUPR
10064-8-MP	KY8401	803FIL	PV270R1L1T1NYCC
10066FIL	KY8401	803FIL	PV270R1L1T1NYLWX5947
10066FIL	KY8401	804-0266A	PV270R1L1T1NZLC
10067FIL	KY8401	804-0509A	PV270R1L1T1PUCCX5947
10067FIL	KY8551	804-0820A	PV270R1L1T1VUL1
10068FIL	KY8551	804-0877A	PV270R2L1T1WMMWK0128
10068FIL	KY8602	804-12-RL	PV270R9K1BBN3LZK0297
10069FIL	KY8602	804-1882B	PV270R9K1T1N2CCK0193
10069FIL	KY8658	8042FIL	PV270R9K1T1NMMCK0027
10079FIL	KY8658	8042FIL	PV270R9K1T1NMMCK0071
10079FIL	KY8674	804-3076A	PV270R9K1T1NMMCK0204
1007FIL	KY8674	8044FIL	PV270R9K1T1NMMCK0303
1007FIL	KY8675	8044FIL	PV270R9K1T1NMMZK0397
10080FIL	KY8675	804-4-RL	PV270R9K1T1NYCCK0103
10080FIL	KY8816	8045FIL	PV270R9K1T1NYCCK0325
10081FIL	KY8816	8045FIL	PV270R9K1T1VMMCK0128
10081FIL	KY8816	8046FIL	PV270R9K1T1VMMCK0303
10082FIL	KY8816	8046FIL	PV270R9L1LKN2CCK0006X5888
10082FIL	KY8818	804-6-RL	PV360R1K1LKNUPM
100-8376-01	KY8818	8047FIL	PV360R1K1T1N2L1
10083AFIL	KY8830	8047FIL	PV360R1K1T1NMFC
10083AFIL	KY8830	8048FIL	PV360R1K1T1NMMC
10083FIL	KY8830	8048FIL	PV360R1K1T1NMMK
10083FIL	KY8830	804-8-RL	PV360R1K1T1NMRC
10084FIL	KY8831	8050B-11	PV360R1K1T1NUPR
10084FIL	KY8831	8050B-11	PV360R1K1T1NWL1
100-8536-01	KY8832	8051B-11	PV360R1K1T1NYC1
10085FIL	KY8832	8051B-11	PV360R1K1T1NYCC
10085FIL	KY8832	8056FIL	PV360R1K1T1NYCCX5947

10085FIL	KY8832	8056FIL	PV360R1K1T1NZC1
10085FIL	KY8833	8062FIL	PV360R1K1T1NZCC
100-8621-01	KY8833	8062FIL	PV360R1K1T1NZL1
10086FIL	KY8834	8064FIL	PV360R1L1T1NYCCX5947
10086FIL	KY8834	8064FIL	PV40FB-010/MV40-011
100-8890-01	KY8834	807FIL	PV44-XX2-B01
10088FIL	KY8834	807FIL	PV44-XX2-B01
10088FIL	KY8835	80C-A04	PVAC1ECMNLJW
10089FIL	KY8835	80C-A05	PVAC1ECMNSJDLJ5
10089FIL	KY8836	80C-A06	PVAC1ECMNSJW35
1008X-025	KY8836	80C-A08	PVAC1ECMNSJW42
1008X-025S	KY8869	80C-A10	PVAC1ECMNSJWL
1008X-04	KY8869	80C-A12	PVAC1ECMNSTW20
1008X-04C	KY8869	80C-A16	PVAC1ECMVSJW35
1008X-04S	KY8869	80C-B04	PVAC1ECSNSJW20
1008X-05	KY8915	80C-B05	PVAC1ESMNSJW
1008X-05C	KY8915	80C-B06	PVAC1ETMNSJW35
1008X-06	KY8916	80C-B08	PVAC1EUMNSJW35
1008X-06C	KY8916	80C-B10	PVAC1PCMNL35
1008X-08	KY8942	80C-B12	PVAC1PCMNS35
1008X-08C	KY8942	80C-B16	PVAC1PCMNS42
100-906090	KY9042	80C-B20	PVAC1PCMVS35
10090FIL	KY9042	80C-C04	PVAC1PMMNS35
10090FIL	KY9086	80C-C05	PVAC1PPMNS35
10091FIL	KY9086	80C-C06	PVAC1PSMNS35
10091FIL	KY9090	80C-C08	PVAC1PSMNS42
10097FIL	KY9090	80C-C10	PVAC1PTMNS35
10097FIL	KY9318	80C-C12	PVAC1PUMNS35
10098FIL	KY9318	80C-C16	PVAC2ECMNSJW35
10098FIL	KY9319	80C-C20	PVAC2ECMNSJW42
1009X-06	KY9319	80C-CS08	PVAC2ECMNSTW35
1009X-08	KY9385	80C-CS10	PVAC2ESMNSJW20
100AP90-155	KY9385	80C-CS12	PVAC2ESMNSTW35
100BL-08	KY9387	80C-E04	PVAC2ETMNSJW20
100CB4401	KY9387	80C-E05	PVAC2MCMNLJW35
100CB5501	KY9388	80C-E06	PVAC2MCMNSJW35
100CB6601	KY9388	80C-E08	PVAC2MCMNSJW42
100CB9901-155AP	KY9389	80C-E10	PVAC2MCMNSTW20
100CCL40	KY9389	80C-E12	PVAC2MCSNSJW
100CCL60	KY9393	80C-E16	PVAC2MSMNSJW35
100CGL40	KY9393	80C-F08A	PVAC2MTMNSJW35
100CGL60	KY9393	80C-F12A	PVAC2MUMNSJW35
100CL4400	KY9393	80C-F16A	PVAC2PCMNLJW20
100CL6600-155	KY9426	80C-F20A	PVAC2PCMNSJW35
100CL9900-155AP	KY9426	80C-L12	PVAC2PCMVSJW35
100CN6603-HP	KY9426	80C-L16	PVAC2PSMNSJW35
100CN6604-HP	KY9426	80CN102QBM3KG321	PVAC2PTMNSJW35
100CP40	KY9440	80CN105QBT1KG244	PVACMS
100CP60	KY9440	80CN105QEVT1KG324	PVACPC35NL
100CT4440	KY9440	80CN110QBF1KG321	PVACPC35NS
100CT6660-155	KY9440	80CN110QBM3KG321	PVACPPCMV35
100CT6960-155	KY9449	80CN110QBPKG321	PVACPPDMN35
100CT9990-155AP	KY9449	80CN110QBT1KG321	PVACPPMMN35

100CX6666-155	KY9449	80CN110QEVM3KG324	PVACPPPMN35
100CX9999-155AP	KY9449	80CN110QEVPKR324	PVACPPPMV35
100EX-012	KY9460	80CN110QEVT1KG324	PVACPPSMN42
100EX-012C	KY9460	80CN120QEVM3KG324	PVACPPTMN35
100EX-02	KY9470	80CN120QEVT1KG324	PVACPPUMV35
100EX-025	KY9470	80CN202QBM3KG241	PVACPSN
100EX-025S	KY9500	80CN202QBPKG321	PVACRECMN35
100EX-025X	KY9500	80CN205QBM3KG241	PVACRECMN42
100F4433	KY9501	80CN205QBPKG241	PVACRECMV35
100F6633	KY9501	80CN205QBT1KG241	PVACRECSN35
100F6633-155	KY9501	80CN205QBT1KR321	PVACREMMN35
100F6933-155	KY9501	80CN205QEVF4KG244	PVACRESMN35
100F9933-155AP	KY9502	80CN205QEVM3KG324	PVACRESMN42
100FX-03	KY9502	80CN205QEVT1KG244	PVACREUMN35
100JX-025	KY9502	80CN205QEVT1KG324	PVACREUMV35
100JX-03	KY9502	80CN210QBM3KG241	PVACUSN
100JX-05	KY9577	80CN210QBM3KG321	PVACUSV
100JX-12	KY9577	80CN210QBM3KR321	PVACZ1NS35
100KX-05	KY9579	80CN210QBPKR321	PVACZ1NS42
100KX-12	KY9579	80CN210QBT1KG241	PVACZ2NS35
100LX-025	KY9589	80CN210QEVF1KS244	PVA-F100
100LX-03	KY9589	80CN210QEVM3KG244	PVA-F100
100LX-03C	KY9590	80CN210QEVM3KG324	PVA-F101B
100LX-04	KY9590	80CN210QEVPKG324	PVA-F101B
100LX-05	KY9591	80CN210QEVPKR324	PVA-F101E
100LX-05C	KY9591	80CN210QEVPKS324	PVA-F101E
100LX-06	KY9611	80CN210QEVT1KG244	PVA-F101F
100LX-08	KY9611	80CN210QEVT1KG324	PVA-F101F
100LX-12	KY9612	80CN220QBPKR321	PVA-F101M
100LX-16	KY9612	80CN220QEVM3KG244	PVA-F101M
100M59B3-155A	KY9914	80CN220QEVM3KG324	PVA-F101U
100M59B3-155AP	KY9914	80CN220QEVT1KG324	PVA-F101U
100M96B3-155	KY9914	80CN220QEVT1KR324	PVA-F102B
100MAH5H5-155	KY9914	80CN2WRBT1KG241	PVA-F102B
100MAH5H9-155	KY9LX-4-03	80C-P02H	PVA-F102B0
100MX-08	KY9NX-4-04	80C-P03	PVA-F102B0
100NX-04	KYA5X-1-03	80C-P03F	PVA-F102B1
100NX-04C	KYA5X-3-03	80C-P04	PVA-F102B1
100NX-05	KYALX-3-025C	80C-P04H	PVA-F191B
100NX-05C2	KYAZX-1-025	80C-P04J	PVA-F191B
100NX-06	KYAZX-3-025	80C-P05	PVA-F191F
100NX-06C	KYAZX-3-03	80C-P05F	PVA-F191F
100NX-08	KYAZX-6-03	80C-P06	PVA-F191M
100NX-08C	KYAZX-6-05	80C-P06H	PVA-F191M
100NX-10	KYBLX-4-03S	80C-P08	PVA-F192B
100NX-10C	KYBTX-2-025	80C-P08H	PVA-F192B
100NX-12	KYBTX-2-03	80C-P08J	PVA-H2491E
100NX-12C	KYBTX-2-03C2	80C-P10	PVA-H2491E
100NX-16	KYBTX-2-04	80C-P10H	PVA-J1302B
100NX-16C	KYBTX-4-025	80C-P12	PVA-J1302B
100NX-20	KYBTX-4-04	80C-P12H	PVA-J1302B0
100P105QBM4MF241	KYC06/025/00	80C-P16	PVA-J1302B0
100P105QBT2MF241	KYC06/060/00	80C-P16H	PVA-J1302B0P5

100P105QBT2MF243	KYC08/060/00	80C-P16J	PVA-J1302B0P5
100P105QBT2MF321	KYC12/025/00	80CPM1CF	PVA-J1302B1
100P110QBM4MF241	KYC12/060/00	80C-T04N	PVA-J1302B1
100P110QBT2MF323	KYM5X-8-03S	80C-T05N	PVA-J1302B9
100P110QBT2MG241	KYMZX-12-08	80C-T06N	PVA-J1302B9
100P110QBT3MG241	KYMZX-6-03	80C-T08N	PVA-J1302J0
100P120QBM4MF241	KYMZX-6-05	80C-T10N	PVA-J1302J0
100P2040WBT3MG243	KYPEX-3-012	80C-T12N	PVA-J1302J9
100P205QBM4MF321	KYREX-11-012	80C-T16N	PVA-J1302J9
100P205QBT2MF241	KYS06/025/00	80-ET04	PVA-J1352B
100P205QBT2MF321	KYS12/025/00	80-ET08	PVA-J1352B
100P210QBM4MF321	KYZTX-2-025	80-ET09	PVA-J1352B0
100P210QBPMF321	KZ0241	80-ET10	PVA-J1352B0
100P220QBM4MF321	KZ0241	80-ET11	PVA-J1352B1
100PX-02	KZ0290	80-ET17	PVA-J1352B1
100PX-03	KZ0290	80-ET18	PVA-J1352B9
100PX-03C	KZ0295	8-1 AW2-SS	PVA-J1352B9
100PX-03C2	KZ0295	8-1 Z3HCZ7-SS	PVA-J1392B9
100PX-04	KZ1013	8-1 Z3HLZ7-SS	PVA-J1392B9
100PX-04B-LPG	KZ1013	81.03.150.28	PVA-J1452B9
100PX-04C	KZ1017	81.04.150.10	PVA-J1452B9
100PX-04C2	KZ1017	81.04.150.15	PVA-J5352B9
100PX-04S	KZ1020	81.05.150.18	PVA-J5352B9
100PX-05	KZ1020	81.05.150.19	PVA-P111
100PX-05C	KZ1034	81.06.150.05	PVA-P111
100PX-05C2	KZ1034	81.08.150.08	PVA-P115
100PX-06	KZ1043	81.10.150.17	PVA-P115
100PX-06C	KZ1043	81.10.150.18	PVA-P121
100PX-06C2	KZ1063	81.10.150.20	PVA-P121
100PX-08	KZ1063	81.10.150.24	PVA-P122
100PX-08C	KZ1064	81.10.150.26	PVA-P122
100PX-08C2	KZ1064	81.10.150.71	PVA-P161
100PX-10	KZ1066	81.11.150.32	PVA-P161
100PX-12	KZ1066	81.11.150.34	PVA-P163
100PX-16	KZ1071	81.11.150.43	PVA-P163
100RX-04	KZ1071	81.11.150.65	PVA-P171
100RX-04SA	KZ1074	81.12.015.10	PVA-P171
100RX-05	KZ1074	81.14.150.30	PVAPKV31N
100TX-025	KZ1074	81.14.150.31	PVAPSC016N
100TX-025C	KZ1074	81.14.150.32	PVAPSE31NX5860
100TX-03	KZ1100	81.14.150.33	PVAPSR11N
100TX-03C2	KZ1100	81.16.021.13	PVAPSR21N
100TX-04	KZ1101	81.50.009.02	PVAPSR31N
100V4-10	KZ1101	81.88.150.02	PVAPSR34N
100V4-10C	KZ1103	8-1/2 AW2-SS	PVAPSR41N
100V4-12	KZ1103	8-1/2 F5OF-S	PVAPSR44N
100V4-12C	KZ1146	8-1/2 F5OG-S	PVAPSR51N
100V4-16	KZ1146	8-1/2 ZHBW2-SS	PVAPSS11N
100V4-16C	KZ1147	8-1/2 ZHLW2-M	PVAPSS21N
100V4-20	KZ1147	8-1/2 ZHLW2-NNR	PVAPSS31N
100V4-20C	KZ1148	8-1/2 ZHLW2-SS	PVAPSS41N
100V4-24	KZ1148	8-1/2 ZHLW2-TTZ	PVAPSS41V
100V4-32	KZ1148	8-1/4 F5OG-S	PVAPSS44N

100V6-20	KZ1148	8-10 C5BU-S	PVAPSS51N
100V6-20C	KZ1218	8-10 C5OLO-S	PVAPST21N
100V6-24	KZ1218	8-10 F5BU-S	PVAPST31N
100V6-24C	KZ1258	8-10 F5OG5-S	PVAPST41N
100V6-32	KZ1258	8-10 F5OLO-S	PVAPST41V
100V6-32C	KZ1280	8-10 LOHB3-S	PVAPST44V
100V6-40	KZ1280	8-10 V5OLO-S	PVAPST51N
100V6-48	KZ1304	8-10 V5OX-S	PVAPSV11N
100VM4071	KZ1304	81000947-00600	PVAPSV21N
100VM4072	KZ1304	81000947-00600	PVAPSV21V
100VM5071	KZ1304	810093-5	PVAPSV21V-300
100VM5072	KZ1344	8-10-8 R5OLO-S	PVAPSV31N
100VM5073	KZ1344	8-10-8R5OMLOS	PVAPSV41N
100VM6071-155	KZ1358	8-10C5OMLOS	PVAPSV44N
100VM6071155TLT	KZ1358	8-10C5OMXS	PVAPSV51N
100VM6071-C2S	KZ1385	8-10C5OMXSS	PVAPSV53N
100VM6073	KZ1385	8-10F5MXS	PVAPVC2N
100VM9071-155	KZ1412	8-10F5OMLOS	PVAPVC3N
100VS-4	KZ1412	8-10F5OMXS	PVAPVE11N20
100VS-6	KZ1413	8-10F5OMXSS	PVAPVE21N
100VS-8	KZ1413	811-12	PVAPVE21N20
100VX-025	KZ1419	811-16	PVAPVE31N20
100YX-03	KZ1419	811-20	PVAPVE34N20
100YX-03C2	KZ1419	811-24	PVAPVE41N20
100YX-04	KZ1419	811-32	PVAPVE44N20
100YX-04C	KZ1420	811-40	PVAPVE51N20
100YX-04C2	KZ1420	811-48	PVAPVV11N20
100YX-05	KZ1420	8-12 C5BU-S	PVAPVV21N20
100YX-05C	KZ1420	8-12 C5OLO-S	PVAPVV21V20
100YX-06	KZ2364	8-12 C5OLO-S BP	PVAPVV31N20
100YX-06C	KZ2364	8-12 C5OX-S	PVAPVV34N20
100YX-08	KZ3518	8-12 CBZ-SS	PVAPVV41N20
100YX-08C	KZ3518	8-12 CTX-S	PVAPVV41V20
100YX-08C2	KZ3519	8-12 F5BU-S	PVAPVV44N20
100YX-10	KZ3519	8-12 F5OLO-S	PVAPVV51N20
100YX-10C2	KZ3519	8-12 F5OX-S	PVA-ZF102B
100YX-12	KZ3519	8-12 FBU-S	PVA-ZF102B
100YX-12C	KZ3520	8-12 FBZ-SS	PVC0000N1.
100YX-12C2	KZ3520	8-12 FLO-S	PVC06/050/03
100YX-16	KZ3521	8-12 FW-SS	PVC09/005/03
100YX-16C	KZ3521	8-12 GBZ-SS	PVC09/010/K+S
100ZX-05	KZ3521	8-12 GTX-S	PVC09/050/03
10-1/2 AOEG-S	KZ3521	8-12 LOHB3-S	PVC12/050/03
10-1/2 F5OG-S	KZ3522	8-12 TRBZ-SS	PVCMAC1N1
10-1/2 ZHLW2-SS	KZ3522	8-12 VTX-S	PVCMACCN1
10-1/4 F5OG-S	KZ3522	8-12 ZHLS-SS	PVCMACZN1
10-10 EBZ-SS	KZ3522	8-12-8R5OMLOS	PVCMAF1N1
10-10 HBZ-SS	KZ3547	8-12-8WJMLOS	PVCMAFBN1
10-10 WBZ-SS	KZ3547	8-12C4OMLOS	PVCMAFCN1
10-10 ZHBA-SS	KZ3566	8-12C4OMLOSV	PVCMAFCV1
1010-0342	KZ3566	8-12C4OMXS	PVCMAFZN1
1010-0343	KZ3670	8-12C4OMXSS	PVCMAL1N1
1010-0344	KZ3670	8-12C5OMLOS	PVCMALCN1

1010-0345	KZ3671	8-12C5OMXS	PVCMALCN1X5908
1010-0418	KZ3671	8-12CMTXSS	PVCMALZN1
1010-0453	KZ3672	8-12F42EDMLOS	PVCMAM1N1
1010-0884	KZ3672	8-12F42EDMLOSS	PVCMAMCN1
10100FIL	KZ3672	8-12F42EDMXS	PVCMAMCV1
10100FIL	KZ3672	8-12F42EDMXSS	PVCMAMZN1
10-10-10 JBZ-SS	KZ3673	8-12F4OMXS	PVCMAPVN1
10-10-12 WJLO-S	KZ3673	8-12F4OMXSS	PVCMAPVV1
10-10-12S4OMLOS	KZ3673	8-12F5OMLOS	PVCMAR1N1
1010-1408	KZ3673	8-12F5OMXS	PVCMARCN1
1010-1421	KZ3674	8-12F5OMXSS	PVCMARZN1
1010-1487	KZ3674	8-12F6MK4S	PVCMASZN1
1010-1488	KZ3674	8-12F6MK4SS	PVCMAT2N1X5939
1010-1489	KZ3674	8-12FMK4S	PVCMATFN1
1010-1490	KZ3675	8-12FMK4SS	PVCMATPN1
1010-1491	KZ3675	8-12FMTXS	PVCMATPV1
1010-1500	KZ3675	8-12FMTXSS	PVCMAU2N1
1010-1501	KZ3675	8-12LLOHU86S	PVCMAUBN1
1010-2312	KZ3676	8-12MMLOHB3S	PVCMAUPN1
1010-2968	KZ3676	8-12SLOHU86S	PVCMCC1N1
10103FIL	KZ3676	8-131-N300-90	PVCMCCCN1
10103FIL	KZ3676	8-16 C5OX-S	PVCMCF1N1
1010-4075	KZ3677	8-16 F5OLO-S	PVCMCFBN1
10104FIL	KZ3677	8-16 F5OX-S	PVCMCFCN1
10104FIL	KZ3740	8-16 FBZ-SS	PVCMCFCN1X5807
10-10-4JMTXSS	KZ3740	8-16F42EDMXS	PVCMCKN1
1010-5162	KZ3759	8-16F42EDMXSS	PVCMCKN8
1010-5218	KZ3759	8-16F4OMXS	PVCMCKV1
10-10-6 JLZ-SS	KZ3796	8-16F5OMLOS	PVCMCL1N1
1010-6243	KZ3796	8-16F5OMXSS	PVCMCLCN1
1010-6332	KZ3796	8-16MMLOHB3S	PVCMCM1N1
1010-6333	KZ3796	8-2 FBZ-SS	PVCMCMCN1
1010-6334	KZ3947	8-2 FHC-SS	PVCMCMCV1
10-10-6JMTXS	KZ3947	8-2 HBZ-SS	PVCMCMZN1
1010-7310	KZ3990	8-2 MHN-SS	PVCMCRCN1
1010-7363	KZ3990	8-2 MHN-SSHP	PVCMCU2N1
1010-7598	KZ3996	8-2 RA-HC	PVCMEC1N1
1010-7817	KZ3996	8-2 RA-SS	PVCMECBN1
1010-7817-DA	KZ3996	8-2 RB-S	PVCMECCN1
1010-7817-YB	KZ3996	8-2 RB-SS	PVCMEF1N1
1010-7818	KZ4408	8-2 RB-SSHP	PVCMEFCN1
1010-7818-DA	KZ4408	820090-10MM	PVCMEL1N1
1010-7819	KZ4408	820090-12MM	PVCMELCN1
1010-7819-DA	KZ4408	820090-14MM	PVCMEM1N1
1010-7819-YB	KZ4410	820090-15MM	PVCMEM1V1
1010-7820	KZ4410	820090-16MM	PVCMEMCN1
1010-7820-DA	KZ4410	820090-18MM	PVCMEMZN1
1010-7820-YB	KZ4410	820090-20MM	PVCMEPVN1
1010-7821	KZ4411	820090-22MM	PVCMER1N1
1010-7821-DA	KZ4411	820090-25MM	PVCMERCN1
1010-7821-YB	KZ4412	820090-28MM	PVCMERZN1
1010-7822	KZ4412	820090-30MM	PVCMESNS
1010-7822-DA	KZ4412	820090-32MM	PVCMEU2N1

1010-7822-YB	KZ4412	820090-6MM	PVCMEUPN1
1010-7823	KZ4413	820090-8MM	PVCMPCNS
1010-7824	KZ4413	8207-1	PVC-S-03
1010-7825	KZ4413	8207-1-1/2	PVC-S-05
1010-7826	KZ4413	8207-1-1/4	PVC-S-08
1010-7827	KZ4451	8207SS1/2	PVC-S-12
1010-7828	KZ4451	8207SS1/4A	PVC-S-DN14-NATUR
1010-7829	KZ4451	8207SS1/8	PVC-S-DN18-NATUR
1010-7830	KZ4451	8207SS11/2	PVD-B1411
1010-7831	KZ4452	8207SS11/4	PVD-B1411
10107FIL	KZ4452	8207SS1A	PVD-B141128
10107FIL	KZ4452	8207SS3/4	PVD-B141128
10-10-8 OBZ-SS	KZ4452	8207SS3/8A	PVD-B1414
10-10-8 SBZ-SS	KZ4453	821-10	PVD-B1414
1010-8298	KZ4453	821-12	PVD-B141428
1010-8611	KZ4453	821-4	PVD-B141428
1010-8946	KZ4453	821-6	PVD-B1416
10108FIL	KZ4454	821-8	PVD-B1416
10108FIL	KZ4454	821FR-12-BLK-RL	PVD-B141628
10108FIL	KZ4455	821FR-12-BLU-RL	PVD-B141628
10108FIL	KZ4455	821FR-12-GRN-RL	PVD-B1421
1010-9028	KZ4660	821FR-4-BLK-RL	PVD-B1421
1010-9234	KZ4660	821FR-4-BLU-RL	PVD-B142128
1010-9239	KZ4683	821FR-4-GRN-RL	PVD-B142128
1010-9245	KZ4683	821FR-6-BLK-RL	PVD-B1424
1010-9446	KZ4701	821FR-6-BLU-RL	PVD-B1424
1010-9447	KZ4701	821FR-6-GRN-RL	PVD-B142428
1010-9591	KZ4702	821FR-8-BLK-RL	PVD-B142428
1010-9963	KZ4702	821FR-8-BLU-RL	PVD-B1426
10109FIL	KZ4718	821FR-8-GRN-RL	PVD-B1426
10109FIL	KZ4718	8230550-+PX080A2	PVD-B142628
10-10F6MK4S	KZ4953	8230550-+PX080A2	PVD-B142628
1010FIL	KZ4953	8237940-+PX063A2	PVD-C3412
1010FIL	KZ6114	8237940-+PX063A2	PVD-C3412
1010P04 00M04	KZ6114	823XDAKP-Y6XV	PVD-C341229
1010P04 00M07	KZ6114	8-24 ZHLS-SS	PVD-C341229
1010P06 00M04	KZ6114	8243540-+PX100A2	PVD-C3422
1010P06 00M07	KZ6161	8243540-+PX100A2	PVD-C3422
1010P08 00M02	KZ6161	82693-023-00A	PVD-C342229
1010T04A01	KZ6228	8272E	PVD-C342229
1010T04P00	KZ6228	8278L-11	PVI018-CD
1010T04P12	KZ6257	8278L-11	PVL-A122115
1010T04P13	KZ6257	8-2829S	PVL-A122115
1010T04P14	KZ6258	82C-00L	PVL-A122315B40
1010T06A01	KZ6258	82C-2HP	PVL-A122315B40
1010T06P00	KZ7068	82CE-061L	PVL-B10/1509832
1010T06P12	KZ7068	82CE-0EP	PVL-B10/1509832
1010T06P13	KZ7124	82C-R01	PVL-B10160652B
1010T06P14	KZ7124	82C-R02	PVL-B10160652B
1010T08A01	KZ7125	8-2RA-6MO	PVL-B101606W2
1010T08P00	KZ7125	8-2RB-6MO	PVL-B101606W2
1010T08P12	KZ7127	83.01.064.22	PVL-B10161852B
1010T08P13	KZ7127	83.05.216.01	PVL-B10161852B

1010T08P14	KZ7225	83.06.012.33	PVL-B101618W2
1010T10A01	KZ7225	83.07.012.21	PVL-B101618W2
1010T10P00	KZ7227	83.07.012.23	PVL-B10260602B
1010T10P12	KZ7227	83.07.012.24	PVL-B10260602B
1010T10P13	KZ7248	83.07.012.51	PVL-B102606W2
1010T10P14	KZ7248	83.07.012.52	PVL-B102606W2
1010T12A01	KZ7249	83.07.012.53	PVL-B10261801F
1010T12P00	KZ7249	83.07.012.54	PVL-B10261801F
1010T12P12	KZ7252	83.07.012.55	PVL-B10261802B
1010T12P13	KZ7252	83.07.012.60	PVL-B10261802B
1010T12P14	KZ7382	83.07.012.64	PVL-B102618W2
10110FIL	KZ7382	8-3/4 AW2-SS	PVL-B102618W2
10110FIL	KZ7383	8-3/4 ZHBW2-SS	PVL-B103618W2
101111-149W	KZ7383	8-3/4 ZHLW2-6MO	PVL-B103618W2
101111-25W	KZ7386	8-3/4 ZHLW2-825	PVL-B10560652B
101111-40W	KZ7386	8-3/4 ZHLW2-NNR	PVL-B10560652B
101111-74W	KZ7387	8-3/4 ZHLW2-SS	PVL-B10561852B
101112-40W	KZ7387	8-3/8 AOE4G-S	PVL-B10561852B
101112-74W	KZ7388	8-3/8 AOEG-S	PVL-B105618W2
101114-149W	KZ7388	8-3/8 F5OG-S	PVL-B105618W2
101114-238W	KZ7389	8-3/8 ZHBW2-SS	PVL-B10760602B
101114-25W	KZ7389	8-3/8 ZHLW2-825	PVL-B10760602B
101114-40W	KZ7390	8-3/8 ZHLW2-IIY	PVL-B107606W2
101114-74W	KZ7390	8-3/8 ZHLW2-SS	PVL-B107606W2
101115-149W	KZ7402	8-3/8F5OHG4S	PVL-B10761802B
101115-238W	KZ7402	8301-016-0B9	PVL-B10761802B
101115-25W	KZ7403	8301-020-00M	PVL-B107618W2
101115-297W	KZ7403	8301-023-00H	PVL-B107618W2
101115-74W	KZ7430	8301-023-00M	PVL-B10860602B
101120-149W	KZ7430	8301-023-00N	PVL-B10860602B
101120-238W	KZ7430	8301-023-0MR	PVL-B10861802B
101120-25W	KZ7430	8301-023-0NP	PVL-B10861802B
101120-40W	KZ7431	8301-023-E4N	PVL-B10961802B
101120-74W	KZ7431	8301-023-N1N	PVL-B10961802B
101125-149W	KZ7431	8301-023-P1N	PVL-B111606
101125-40W	KZ7431	8301-023-Q1M	PVL-B111606
10113FIL	KZ7476	8301-061-00S	PVL-B111618
10113FIL	KZ7476	8301-119-00D	PVL-B111618
10114FIL	KZ7477	8302W	PVL-B1116201
10114FIL	KZ7477	8304-023-0NW	PVL-B1116201
101158-74W	KZ7478	830M-10-BLK-RL	PVL-B112606
101159-74W	KZ7478	830M-10-BLU-RL	PVL-B112606
1011600138-01	KZ7480	830M-10-GRN-RL	PVL-B112618
101161-238W	KZ7480	830M-10-RED-RL	PVL-B112618
101161-74W	KZ7482	830M-12-BLK-RL	PVL-B113618
10116FIL	KZ7482	830M-12-BLU-RL	PVL-B113618
10116FIL	KZ7483	830M-12-GRN-RL	PVL-B115618
10117FIL	KZ7483	830M-12-RED-RL	PVL-B115618
10117FIL	KZ7485	830M-4-BLK-RL	PVL-B117618
10118FIL	KZ7485	830M-4-BLU-RL	PVL-B117618
10118FIL	KZ7486	830M-4-GRN-RL	PVL-B118618
101196-10C	KZ7486	830M-4-RED-RL	PVL-B118618
1011FIL	KZ7506	830M-6-BLK-RL	PVL-B121606

1011FIL	KZ7506	830M-6-BLU-RL	PVL-B121606
101-2	KZ7517	830M-6-GRN-RL	PVL-B1216067
101-2	KZ7517	830M-6-RED-RL	PVL-B1216067
10-12 C5OLO-S	KZ7538	830M-8-BLK-RL	PVL-B121618
10-12 C5OX-S	KZ7538	830M-8-BLU-RL	PVL-B121618
10-12 CBZ-SS	KZ7538	830M-8-GRN-RL	PVL-B1216187
10-12 CLO-S	KZ7538	830M-8-RED-RL	PVL-B1216187
10-12 F5OG5-S	KZ7546	831-10-BLK-RL	PVL-B1216204
10-12 F5OLO-S	KZ7546	831-10-BLU-RL	PVL-B1216204
10-12 FBU-S	KZ7569	831-10-GRN-RL	PVL-B122606
10-12 FBZ-SS	KZ7569	831-10-RED-RL	PVL-B122606
10-12 FH4BZ-SS	KZ7598	831-12-BLK-RL	PVL-B122618
10-12 FLO-S	KZ7598	831-12-BLU-RL	PVL-B122618
10-12 GTX-S	KZ7616	831-12-GRN-RL	PVL-B123606
10-12 LOHB3-S	KZ7616	831-12-RED-RL	PVL-B123606
10-12 V5OLO-S	KZ7619	831-4-BLK-RL	PVL-B123618
10120FIL	KZ7619	831-4-BLU-RL	PVL-B123618
10120FIL	KZ7638	831-4-GRN-RL	PVL-B125606
101-21A	KZ7638	831-4-RED-RL	PVL-B125606
101-21A	KZ7645	831-6-BLK-RL	PVL-B125618
10122FIL	KZ7645	831-6-BLU-RL	PVL-B125618
10122FIL	KZ7646	831-6-GRN-RL	PVL-B127606
10123FIL	KZ7646	831-6-RED-RL	PVL-B127606
10123FIL	KZ7669	831-8-BLK-RL	PVL-B127618
10126-12-12	KZ7669	831-8-BLU-RL	PVL-B127618
10126-4-4	KZ7865	831-8-GRN-RL	PVL-B128606
10126-4-5	KZ7865	831-8-RED-RL	PVL-B128606
10126-6-6	KZ7865	8328D	PVL-B128618
10126-6-8	KZ7865	8339-019-00S	PVL-B128618
10126-8-10	KZ7866	836-10-RL	PVL-B1719
10126-8-8	KZ7866	836-12-RL	PVL-B1719
101274-74W	KZ7955	836-4-RL	PVL-B17197
10-12C3MXS	KZ7955	836-6-RL	PVL-B17197
10-12C4OMLOS	KZ7982	836-8-RL	PVL-B1729
10-12C4OMXS	KZ7982	837BM-10-BLK-RL	PVL-B1729
10-12C4OMXSBP	KZ7989	837BM-10-BLU-RL	PVL-B1818
10-12C4OMXSS	KZ7989	837BM-10-GRN-RL	PVL-B1818
10-12C5OMLOS	KZ8454	837BM-10-RED-RL	PVL-B1828
10-12CMTXS	KZ8454	837BM-12-BLK-RL	PVL-B1828
10-12CMTXSS	KZ8812	837BM-12-BLU-RL	PVL-B1901
10-12F3MK4S	KZ8812	837BM-12-GRN-RL	PVL-B1901
10-12F3MXS	KZ8812	837BM-12-RED-RL	PVL-B1902
10-12F42EDMLOS	KZ8812	837BM-16-BLK-RL	PVL-B1902
10-12F42EDMLOSS	KZ8813-00	837BM-16-BLU-RL	PVL-B191125
10-12F42EDMXS	KZ8813-00	837BM-16-GRN-RL	PVL-B191125
10-12F42EDMXSBP	KZ8815-00	837BM-16-RED-RL	PVL-B191219
10-12F42EDMXSS	KZ8815-00	837BM-4-BLK-RL	PVL-B191219
10-12F4OMXS	KZ8819	837BM-4-BLU-RL	PVL-B192125
10-12F5OMLOS	KZ8819	837BM-4-GRA-RL	PVL-B192125
10-12F5OMXS	KZ8822	837BM-4-GRN-RL	PVL-B192729
10-12F642EDMLS	KZ8822	837BM-4-RED-RL	PVL-B192729
10-12F642EDMXS	KZ8822	837BM-6-BLK-RL	PVL-B1930
10-12F64OMXS	KZ8822	837BM-6-BLU-RL	PVL-B1930

1012FIL	KZ8826-00	837BM-6-GRA-RL	PVL-B193125
1012FIL	KZ8826-00	837BM-6-GRN-RL	PVL-B193125
10-12FMTXS	KZ8826-05	837BM-6-RED-RL	PVL-B1940
10-12FMTXSS	KZ8826-05	837BM-8-BLK-RL	PVL-B1940
10-12LEMQ1SS	KZ8841	837BM-8-BLU-RL	PVL-B194125
10-12LEMQ2SS	KZ8841	837BM-8-GRA-RL	PVL-B194125
10-12LOEMQ2CF	L 809 103	837BM-8-GRN-RL	PVL-B194729
10-12V4OMLOS	L008C-11	837BM-8-RED-RL	PVL-B194729
10-12V4OMXS	L01-02-M00	837CN-10-GRN-RL-C40	PVL-C101608W2
10-12V5OMLOS	L01-02-M00	837CN-10-GRN-RL-C80	PVL-C101608W2
10-12XEMQ1SS	L01-03-M00	837CN-10-RED-RL-C40	PVL-C10161952B
10-12XEMQ2CF	L01-03-M00	837CN-10-RED-RL-C80	PVL-C10161952B
10-12XEMQ2SS	L01-C2-000	837CN-12-GRN-RL-C40	PVL-C101619W2
101303-149W	L01-C2-000	837CN-12-GRN-RL-C80	PVL-C101619W2
101303-74W	L01-C2-M00	837CN-12-RED-RL-C40	PVL-C10260802B
101314-10C	L01-C2-M00	837CN-12-RED-RL-C80	PVL-C10260802B
101314-20C	L01-C3-000	837CN-4-GRN-RL-C40	PVL-C102608W2
101319-149W	L01-C3-000	837CN-4-GRN-RL-C80	PVL-C102608W2
10131FIL	L023-11	837CN-4-RED-RL-C40	PVL-C10261902B
10131FIL	L023D-11	837CN-4-RED-RL-C80	PVL-C10261902B
10136FIL	L03-01-000	837CN-6-GRN-RL-C40	PVL-C102619W2
10136FIL	L03-01-000	837CN-6-GRN-RL-C80	PVL-C102619W2
10137FIL	L037B-11	837CN-6-RED-RL-C40	PVL-C10560852B
10137FIL	L03-C1-000	837CN-6-RED-RL-C80	PVL-C10560852B
101-3-QC	L03-C1-000	837CN-8-GRN-RL-C40	PVL-C10561952B
101412-25W	L03-C1-M00	837CN-8-GRN-RL-C80	PVL-C10561952B
101412-40W	L03-C1-M00	837CN-8-RED-RL-C40	PVL-C10760802B
10143-12-12-SM	L03-C2-000	837CN-8-RED-RL-C80	PVL-C10760802B
10143-12-8	L03-C2-000	837PU-10-BLK-RL	PVL-C107608W2
10143-6-6-SM	L03-C2-M00	837PU-10-BLU-RL	PVL-C107608W2
10143-8-6-SM	L03-C2-M00	837PU-10-GRA-RL	PVL-C10761902B
10143-8-8-SM	L045B-11	837PU-10-GRN-RL	PVL-C10761902B
10146-12-10	L049A-11	837PU-10-RED-RL	PVL-C107619W2
10146-12-12	L04A3-10-10N	837PU-12-BLK-RL	PVL-C107619W2
10146-16-16	L04A3-15-15N	837PU-12-BLU-RL	PVL-C10861902B
10146-20-20	L04A3-30-30N	837PU-12-GRA-RL	PVL-C10861902B
10146-2-4	L04A3-5-5N	837PU-12-GRN-RL	PVL-C10961902B
10146-4-4	L052C-11	837PU-12-RED-RL	PVL-C10961902B
10146-4-5	L067-11	837PU-16-BLK-RL	PVL-C111408
10146-4-6	L06A3-30-30N	837PU-16-BLU-RL	PVL-C111408
101464-74W	L06A3-60-60N	837PU-16-GRN-RL	PVL-C111419
10146-6-4	L06A3-75-75N	837PU-16-RED-RL	PVL-C111419
10146-6-5	L06A3-90-90N	837PU-4-BLK-RL	PVL-C111419-EX
10146-6-6	L074-11	837PU-4-BLU-RL	PVL-C111419-EX
10146-6-8	L074210009	837PU-4-GRA-RL	PVL-C111608
10146-8-10	L07471000Q	837PU-4-GRN-RL	PVL-C111608
10146-8-6	L075-11	837PU-4-RED-RL	PVL-C111613
10146-8-8	L07689000E	837PU-6-BLK-RL	PVL-C111613
10146FIL	L077-11	837PU-6-BLU-RL	PVL-C111619
10146FIL	L083-23-01	837PU-6-GRA-RL	PVL-C111619
10148-12-10	L084A-11	837PU-6-GRN-RL	PVL-C112408
10148-12-12	L087-11	837PU-6-RED-RL	PVL-C112408
10148-16-16	L089-11	837PU-8-BLK-RL	PVL-C112419

10148-20-20	L08-C1-KK00	837PU-8-BLU-RL	PVL-C112419
10148-2-4	L08-C1-KK00	837PU-8-GRA-RL	PVL-C112608
10148-24-24	L08-C2-KK00	837PU-8-GRN-RL	PVL-C112608
10148-32-32	L08-C2-KK00	837PU-8-RED-RL	PVL-C112619
10148-4-4	L08-C2-KL00	838M-10-RL	PVL-C112619
10148-4-5	L08-C2-KL00	838M-12-RL	PVL-C113408
10148-4-6	L105G04B	838M-4-RL	PVL-C113408
10148-6-4	L105G04B	838M-6-RL	PVL-C121408
10148-6-5	L111P3	838M-8-RL	PVL-C121408
10148-6-6	L111P3	83C-0CB	PVL-C121419
10148-6-8	L111Q3	83C-A24	PVL-C121419
10148-8-10	L111Q3	83C-A32	PVL-C121608
10148-8-6	L16-02-000	83C-C20H	PVL-C121608
10148-8-8	L16-02-000	83C-C24	PVL-C1216097
10-14S LOHU86-S	L16-03-000	83C-C32	PVL-C1216097
1015 079F92	L16-03-000	83C-CS16	PVL-C121613
1015/B02	L16-04-000	83C-CS20	PVL-C121613
1015/B03	L16-04-000	83C-D06	PVL-C121619
1015/B04	L16-C2-000	83C-D08	PVL-C121619
1015/B06	L16-C2-000	83C-D10	PVL-C1216197
1015/B08	L16-C2-D00	83C-D12	PVL-C1216197
1015/B09	L16-C2-D00	83C-D16	PVL-C122408
1015/B10	L16-C2-G00	83C-D16H	PVL-C122408
1015/B11	L16-C2-G00	83C-D20	PVL-C122419
1015/B12	L16-C3-000	83C-D20H	PVL-C122419
1015/B13	L16-C3-000	83C-D24	PVL-C122608
1015/B15	L16-C3-G00	83C-D32	PVL-C122608
1015/FLAREPIN	L16-C3-G00	83CE-083U	PVL-C122613
1015/MANO	L16-C4-000	83C-E20	PVL-C122613
1015-1G	L16-C4-000	83C-E24	PVL-C122619
10154-4-4B	L16-C4-D00	83C-E32	PVL-C122619
10155-12-12	L16-C4-D00	83C-L12	PVL-C1226197
10155-16-16	L16-C4-G00	83C-L16	PVL-C1226197
10155-2-3	L16-C4-G00	83C-L20	PVL-C123608
10155-2-4	L17-03-000	83C-L24	PVL-C123608
10155-4-3	L17-03-000	83C-L32	PVL-C123613
10155-4-4	L17-04-000	83C-R02	PVL-C123613
10155-4-4C	L17-04-000	83C-R02H	PVL-C127608
10155-4-5	L17-C2-000	83C-R12	PVL-C127608
10155-4-6	L17-C2-000	83C-T10	PVL-C127619
10155-6-4	L17-C2-D00	83C-U12	PVL-C127619
10155-6-6	L17-C2-D00	83C-U16	PVL-C128608
10155-6-6C	L17-C3-000	83FR-6-BLU-RL	PVL-C128608
10155-8-6	L17-C3-000	83FR-6-RED-RL	PVL-C128619
10155-8-8	L17-C3-D00	83KAAK17MPG	PVL-C128619
10155-8-8C	L17-C3-D00	83KAAK21MPG	PVL-C1713
101563-40W	L17-C3-G00	83KAAK26MPG	PVL-C1713
10156-4-4	L17-C3-G00	83KAIW17MPG	PVL-C1713B
10157-2-2	L17-C4-000	83KAIW21MPG	PVL-C1713B
10157FIL	L17-C4-000	83KAIW26MPG	PVL-C1713B19
10157FIL	L17-C4-D00	83KATF13MPG	PVL-C1713B19
10158-16-16	L17-C4-D00	83KATF19MPG	PVL-C1713C19A
10158-4-4	L18-03-KK00	8-4 B2HF-SS	PVL-C1713C19A

10158-6-6	L18-03-KK00	8-4 C5OX-S	PVL-C1713D25A
10158-8-8	L18-C2-KK00	8-4 CBU-S	PVL-C1713D25A
10158FIL	L18-C2-KK00	8-4 CBZ-SS	PVL-C1713H20A
10158FIL	L18-C2-KL00	8-4 CTX-B	PVL-C1713H20A
10158H-12-12	L18-C2-KL00	8-4 DBZ-SS	PVL-C1723
10158H-16-16	L18-C3-KK00	8-4 DTX-S	PVL-C1723
1015FIL	L18-C3-KK00	8-4 ELZ-SS	PVL-C1819
1015FIL	L18-C3-KL00	8-4 F4BU-S	PVL-C1819
10-15L LOHU86-S	L18-C3-KL00	8-4 F5OG5-S	PVL-C1829
1015Y04F00	L18-C4-KK00	8-4 F5OLO-S	PVL-C1829
1015Y04F01	L18-C4-KK00	8-4 F5OX-S	PVL-C1901
1015Y04F02	L18-C4-KL00	8-4 FBU-S	PVL-C1901
1015Y04F03	L18-C4-KL00	8-4 FBZ-SS	PVL-C1902
1015Y04F04	L1A060555050N	8-4 FHC-825	PVL-C1902
1015Y04F05	L1A060N233	8-4 FHC-B	PVL-C2713B19
1015Y04F07	L1A1251305050N	8-4 FHC-SS	PVL-C2713B19
1015Y04F09	L1A3003205050N	8-4 FHC-SSHP	PVL-C2713H20A
1015Y04F10	L222C2	8-4 FW-SS	PVL-C2713H20A
1015Y06F00	L222C2	8-4 GBZ-B	PVP-C3212
1015Y06F01	L26-02-G00	8-4 GBZ-SS	PVP-C3212
1015Y06F02	L26-02-G00	8-4 GTX-S	PVP-C321229
1015Y06F03	L26-03-000	8-4 HBMP7-SS	PVP-C321229
1015Y06F04	L26-03-000	8-4 HBZ-SS	PVS-C3312
1015Y06F05	L26-04-000	8-4 HTX-S	PVS-C3312
1015Y06F07	L26-04-000	8-4 MHN-B	PVS-C331229
1015Y06F09	L26-04-D00	8-4 MHN-HC	PVS-C331229
1015Y06F10	L26-04-D00	8-4 MHN-M	PVS-C3322
1015Y08F00	L26-C2-000	8-4 MHN-SS	PVS-C3322
1015Y08F01	L26-C2-000	8-4 MHN-SSHP	PVS-C332229
1015Y08F02	L26-C2-D00	8-4 RA-625	PVS-C332229
1015Y08F03	L26-C2-D00	8-4 RA-6MO	PVU-B1428
1015Y08F04	L26-C2-G00	8-4 RA-B	PVU-B1428
1015Y08F05	L26-C2-G00	8-4 RA-HC	PVU-B14287
1015Y08F07	L26-C3-000	8-4 RA-M	PVU-B14287
1015Y08F09	L26-C3-000	8-4 RA-SS	PVU-C3229
1015Y08F10	L26-C3-D00	8-4 RA-SSHP	PVU-C3229
1015Y10F00	L26-C3-D00	8-4 RA-TI	PVU-C3329
1015Y10F01	L26-C3-G00	8-4 RB-625-NC	PVU-C3329
1015Y10F02	L26-C3-G00	8-4 RB-6MO	PVU-C3429
1015Y10F03	L26-C4-000	8-4 RB-825	PVU-C3429
1015Y10F04	L26-C4-000	8-4 RB-B	PVU-CB18
1015Y10F05	L26-C4-D00	8-4 RB-HC	PVU-CB18
1015Y10F07	L26-C4-D00	8-4 RB-M	PVU-EC19
1015Y10F09	L26-C4-G00	8-4 RB-M	PVU-EC19
1015Y10F10	L26-C4-G00	8-4 RBR-SS	PVU-H131510
10-16 C5OX-S	L27-04-000	8-4 RB-S	PVU-H131510
10-16 F5OX-S	L27-04-000	8-4 RB-SS	PVU-H13158
101605-25W	L27-C2-000	8-4 RB-SSHP	PVU-H13158
101605-40W	L27-C2-000	8-4 RB-TI	PVU-LBB118
10-16C4OMLOS	L27-C3-000	8-4 SE-SS	PVU-LBB118
10-16F42EDMLOS	L27-C3-000	8-4 T2HF-B	PVU-LC213
10-16F42EDMXS	L27-C4-000	8-4 T2HF-SS	PVU-LC213
10-16F42EDMXSS	L27-C4-000	8-4 T2HG-B	PVU-LC213E

10-16MMLOHB3S	L27-C4-G00	8-4 T2HG-SS	PVU-LC213E
10-16S LOHU86-S	L27-C4-G00	8-4 TRBU-S	PVU-LCB119
10170-12-10-SM	L28-03-KK00	8-4 TRBZ-B	PVU-LCB119
10170-12-12-SM	L28-03-KK00	8-4 TRBZ-SS	PVU-LCC119
10170-12-8-SM	L28-04-KL00	8-4 TRLO-S	PVU-LCC119
10170-16-12-SM	L28-04-KL00	8-4 TRTX-B	PWA-L1444
10170-16-16	L28-06-KK00	8-4 TRTX-SS	PWA-L1444
10170-6-6-SM	L28-06-KK00	8-4 TRW-SS	PWA-L1466
10170-8-10-SM	L28-06-KL00	8-4 VTX-S	PWA-L1466
10170-8-6-SM	L28-06-KL00	84.12.064.151	PWA-L1488
10170-8-8-SM	L28-C3-KK00	84.12.064.213	PWA-L1488
101711-1	L28-C3-KK00	84.19.064.02	PWB-A1412
10171-12-12	L28-C3-KL00	84.21.051.16	PWB-A1412
10171-16-16	L28-C3-KL00	84.21.051.30	PWB-A1468
10171-20-16	L28-C4-KK00	84.21.051.31	PWB-A1468
10171-20-20	L28-C4-KK00	84.21.064.65	PWB-A1469
10171-20-20-SM	L28-C4-KKD0	84.21.064.68	PWB-A1469
10171-24-24-SM	L28-C4-KKD0	84.21.064.69	PWB-A1483
10171-32-32	L28-C4-KL00	84.21.064.70	PWB-A1483
10171-6-6	L28-C4-KL00	84.21.307.34	PWB-A1489
10171-8-8	L28-C6-KK00	84.21.471.18	PWB-A1489
10173-12-12-SM	L28-C6-KK00	84.21.471.25	PWB-A1493
10173-20-20-SM	L28-C6-KKD0	84.22.064.09	PWB-A1493
10173-32-32-SM	L28-C6-KKD0	84.22.064.10	PWB-A1822
10177-12-12	L28-C6-KL00	84.27.016.01	PWB-A1822
10177-16-16	L28-C6-KL00	84.33.176.01	PWB-A1833
10177-20-20	L30-06-000	84.33.176.12	PWB-A1833
10177-8-12	L30-06-000	84.33.176.13	PWB-A1898
10177-8-8	L30-06-G00	84.58.164.126	PWB-A1898
10177FIL	L30-06-G00	84.71.216.02	PWB-A1899
10177FIL	L30-08-000	84.72.019.20	PWB-A1899
10178-12-12-SM	L30-08-000	84.75.308.03	PWB-A3469
10178-16-16-SM	L30-08-G00	84.75.308.04	PWB-A3469
10178-20-20-SM	L30-08-G00	84.77.064.131	PWB-A38227
10178-24-24	L30-C6-000	84.78.216.02	PWB-A38227
1017FIL	L30-C6-000	84.78.216.03	PWB-A3833
1017FIL	L30-C6-D00	84.79.346.02	PWB-A3833
10183FIL	L30-C6-D00	8-400	PWB-A38337
10183FIL	L30-C8-000	840-100005	PWB-A38337
10184FIL	L30-C8-000	840-100014	PWB-A3899
10184FIL	L30-C8-D00	8-4-10S5OMLOS	PWB-A3899
10188-02	L30-C8-D00	8-4-4 JLZ-SS	PWD00A-400
1018FIL	L30-C8-G00	845FIL	PWD00A-400X972
1018FIL	L30-C8-G00	845FIL	PWD00B-400
1018X-2-025	L31-08-000	846FIL	PWDA-05/12AM
1018X-2-04	L31-08-000	846FIL	PWDA-05/38AM
1018X-4-025	L31-C8-000	8470A	PWDA-1/12AM
1018X-4-04	L31-C8-000	8470A-023-00W	PWDA-1/38AM
1018X-4-04C	L32-C8-000	847FIL	PWDA-2/12AM
1018X-6-04	L32-C8-000	847FIL	PWDA-2/34AM
1018X-6-04C	L34-06-000	8-4-8 JLZ-SS	PWDA-3/100AM
1018X-6-05	L34-06-000	8491W	PWDA-3/34AM
1018X-6-06	L34-08-000	8-4C3MXS	PWDS-G1/LK55AM

1018X-6-06C	L34-08-000	8-4C4OMLOS	PWDS-G12/LK30AM
1018X-8-06	L34-C6-000	8-4C4OMLOSS	PWDS-G12/LK35AM
1018X-8-08	L34-C6-000	8-4C4OMXS	PWDS-G12/LK40AM
1018X-8-08C	L34-C8-000	8-4C4OMXSBP	PWDS-G34/LK40AM
10191N-4-4C	L34-C8-000	8-4C4OMXSS	PWDS-G34/LK55AM
10191N-8-8C	L35G01A	8-4CMTXS	PWDS-G38/LK30AM
1019FIL	L35G01A	8-4CMTXSS	PWDS-G38/LK35AM
1019FIL	L35G02A	8-4F3MXS	PWDXXA-400
101A-0326	L35G02A	8-4F3MXSS	PWDXXA-401
101A-0409	L3854910253	8-4F42EDMLOS	PWG-4X10-NBR
101A-0410	L3854910253	8-4F42EDMLOSBP	PWG-4X10-NBR
101A-0411	L39-06-LD00	8-4F42EDMLOSS	PWG-6X20-NBR
101A-0414	L39-06-LD00	8-4F42EDMLOSSVCAP	PWG-6X20-NBR
101A-0416	L39-C8-LD00	8-4F42EDMXS	PWG-8X20-SI
101A-0425	L39-C8-LD00	8-4F42EDMXSBP	PWG-8X20-SI
101A-0428	L40-0A-000	8-4F42EDMXSS	PWP-B1268
101A-0430	L40-0A-000	8-4F4OMXS	PWP-B1268
101A-0430-C	L40-0A-G00	8-4F4OMXSS	PWP-B1269
101A-0434	L40-0A-G00	8-4F63MXS	PWP-B1269
101A-0435	L40-0B-000	8-4F642EDMLS	PWP-B1293
101A-0436	L40-0B-000	8-4F642EDMLSS	PWP-B1293
101A-0437	L40-CA-000	8-4F642EDMXS	PWP-B1299
101A-0437-YB	L40-CA-000	8-4F642EDMXSS	PWP-B1299
101A-0440	L40-CA-G00	8-4F64OMXS	PWP-B1888
101A-0467	L40-CA-G00	8-4F6MK4S	PWP-B1888
101A-0521	L40-CB-000	8-4F6MXS	PWP-B1899
101A-1044	L40-CB-000	8-4FMTXB	PWP-B1899
101A-1044-C	L40-CB-G00	8-4FMTXS	PWR-A1822
101A-1067	L40-CB-G00	8-4FMTXSS	PWR-A1822
101A-1201	L41-0B-000	8-4G4MK4S	PWR-B1148
101A-1243	L41-0B-000	8-4G4MK4SS	PWR-B1148
101A-1443	L4152910253	8-4G4MLOSMO	PWR-B1168
101A-1465	L4152910253	8-4G4MXS	PWR-B1168
101A-1465-DA	L41-CA-000	8-4G4MXSMO	PWR-B1169
101A-1465-YA	L41-CA-000	8-4G4MXSSMO	PWR-B1169
101A-1501	L41-CB-000	8-4H6MK4S	PWR-B1189
101A-1663	L41-CB-000	8-4H6MK4SS	PWR-B1189
101A-1731	L4452310253	8-4HMK4S	PWR-E1145
101A-2005	L4452310253	8-4HMK4SS	PWR-E1145
101A-2006	L4452910253	8-4HMTXSS	PWR-E1445
101A-2190	L4452910253	8-4K FBZ-SS	PWR-E1445
101A-2218	L4653310253	8-4K GBZ-SS	PWR-E1448
101A-2224	L4653310253	8-4K T2HF-SS	PWR-E1448
101A-2271	L4853610253	8-4K6OO4MXS	PWR-E1468
101A-2657	L4853610253	8-4K6PP4MXS	PWR-E1468
101A-2687	L4853610257	84KAAW13SPN	PWR-E1468H
101A-2824	L4853610257	84KAAW17SPN	PWR-E1468H
101A-2878	L4853910253	84KAAW21SPN	PWR-E1469
101A-2879	L4853910253	84KAIW13SPN	PWR-E1469
101A-2880	L50	84KAIW17SPN	PWR-E1483
101A-2881	L50-0C-000	84KAPV12SPN	PWR-E1483
101A-2884	L50-0C-000	84KATF08SPN	PWR-E1489
101A-2892	L50-CC-000	84KATF09SPN	PWR-E1489

101A-2898	L50-CC-000	84KATF10SPN	PWR-E1493
101A-2924	L50-CC-G00	84KATF13SPN	PWR-E1493
101A-2925	L50-CC-G00	84KATF16SPN	PWR-H1448
101A-2927	L50-CC-Q04	8-4MHN-825	PWR-H1448
101A-3024	L50-CC-Q04	8-4R FBZ-SS	PWR-H1468
101A-3820	L50I	8-4R6O4MXS	PWR-H1468
101A-395	L5155310253	8-4R6P4MLOS	PWR-H1469
101A-3953	L5155310253	8-4R6P4MXS	PWR-H1469
101A-4424	L5155910253	8-4RB-625	PWR-H1483
101A-4662	L5155910253	84SFAW13SXN	PWR-H1483
101A-4663	L5201-2-02	84SFAW17SXN	PWR-H1493
101A-4664	L5202-2-01	84SFAW21SXN	PWR-H1493
101A-4665	L5203-2-00	84SFIW13SXN	PWR-HB1448
101A-4811	L5206-2-00	84SFIW17SXN	PWR-HB1448
101A-4866	L5206-2-01	84SFIW21SXN	PWR-HB1448-EX
101A-4867	L5207-2-00	84SFTF08SXN	PWR-HB1448-EX
101A-5476	L5209-2-01	84SFTF09SXN	PWR-HB1468
101A-6280	L5255321149	84SFTF10SXN	PWR-HB1468
101A-6283	L5255321149	84SFTF13SXN	PWR-HB1468-EX
101A-6750	L5255921153	84SFTF16SXN	PWR-HB1468-EX
101A-6751	L5255921153	8-4TRMTXSS	PWR-HB1469
101A-6753	L52-CC-000	8-4TRTXS	PWR-HB1469
101A-6754	L52-CC-000	8-5 C5OLO-S	PWR-HB1469-EX
101A-6778	L5300	8-5 F5OG5-S	PWR-HB1469-EX
101A-6779	L5311	8-5 TRBZ-SS	PWR-HB1483
101A-6782	L5331	85.05.216.20	PWR-HB1483
101A-6811	L5341	850MTA	PWR-HB1483-EX
101A-6932	L5352	850MTA	PWR-HB1483-EX
101A-6932-C	L5353	850MTF	PWR-HB1489
101A-6938	L5392	850MTF	PWR-HB1489
101A-6938-C	L5455310249	850MTF-100	PWR-HB1492
101A-6974	L5455310249	850MTF-100	PWR-HB1492
101A-6976	L5455310253	850MTL	PWR-HB1493
101A-7100	L5455310253	850MTL	PWR-HB1493
101A-7106	L5455910253	850TA	PWR-HB1493-EX
101A-7420	L5455910253	850TA	PWR-HB1493-EX
101A-7714	L606G12G	850TF-100	PWR-L1411
101A-7852	L606G12G	850TF-100	PWR-L1411
101A-8187	L606G12G/E	851003-120VAC	PWR-L1444
101A-8340	L606G12G/E	851005-012VDC	PWR-L1444
101A-8418	L606G12W	851005-024VDC	PWR-L1466
101A-8418-DA	L606G12W	851005-120VAC	PWR-L1466
101A-8418-YB	L6553310253	851005-240VAC	PWR-L1488
101A-8419	L6553310253	851006-012VDC	PWR-L1488
101A-8419-DA	L6553910249	851006-024VDC	PWR-L1499
101A-8419-YB	L6553910249	851007-024VDC	PWR-L1499
101A-8420	L6553910253	851008-024VDC	PWS-B122
101A-8421	L6553910253	851009-012VDC	PWS-B122
101A-8421-DA	L6558310249	851009-024VDC	PWS-B133
101A-8422	L6558310249	851011-012VDC	PWS-B133
101A-8422-DA	L6558910253	851017-012VDC	PWS-B155
101A-8423	L6558910253	851017-024VDC	PWS-B155
101A-8423-DA	L6658921153	851017-120VAC	PWS-B188

101A-8423-YC	L6658921153	851019-012VDC	PWS-B188
101A-8424	L6753310253	851019-024VDC	PWS-B199
101A-8424-DA	L6753310253	851019-120VAC	PWS-B199
101A-8424-YC	L6753910253	851019-240VAC	PWS-C5142
101A-8425	L6753910253	851020-012VDC	PWS-C5142
101A-8426	L6758910253	851020-024VDC	PWS-C5143
101A-8427	L6758910253	851020-120VAC	PWS-C5143
101A-8428	L75G03B	851020-240VAC	PWS-C5145
101A-8428-DA	L75G03B	851058-012VDC	PWS-C5145
101A-8428-YC	LA050062	851058-024VDC	PWS-C5148
101A-8429	LA050063	851058-120VAC	PWS-C5148
101A-8429-DA	LA051894	851058-240VAC	PWS-C5149
101A-8429-YC	LA054664	85-161-000	PWS-C5149
101A-8430	LA055375U014	85-161-000	PWS-E101
101A-8431	LA056077	85-162-000	PWS-E101
101A-8432	LA056240	85-162-000	PWS-E111
101A-8432-DA	LA057605U012	851868-012VDC	PWS-E111
101A-8432-YC	LA057605U016	851961-012VDC	PWS-M1011
101A-8433-YC	LA057605U032	85204-501	PWS-M1011
101A-8439	LA057605U050	85204-501	PWS-M1012
101A-8439-DA	LA353689	85204-501M	PWS-M1012
101A-8439-YD	LA385482	85204-501M	PWS-M1013
101A-8440	LA386109U002	85204-501X	PWS-M1013
101A-8440-DA	LA386110U002	85204-501X	PWS-M1015
101A-8441	LA387997U011	8524D	PWS-M1015
101A-8441-DA	LA387997U013	852XBAKP-B4XS	PWS-P111
101A-8442	LA464537	852XBAKP-B6XV	PWS-P111
101A-8442-DA	LA464948U004	852XBAKP-F4XS	PX115-007-S2/MU115-010
101A-8443	LA464948U005	852XBAKP-F6XS	PX115-015-S2/MU115-010
101A-8444	LA465034U002	852XBAKP-F6XU	PX4010
101A-8444-C	LA465034U003	852XGAKP-F4XS	PX4444
101A-8445	LA465048U002	852XGAKP-F6XS	PX455
101A-8446	LA465058U002	852XGAKP-F6XV	PX458
101A-8447-YB	LA465058U003	852XJAKP-D4XS	PX4710
101A-8448	LA465082U102	853009-10	PX475
101A-8448-DA	LA465082U103	853009-12	PX60-003-S2/MU60-001
101A-8452	LA465082U104	853009-14	PX60-005-S2/MU60-001
101A-8452-DA	LA465082U106	853009-16	PX60-010-S2/MU60-003
101A-8452-YC	LA465082U107	853009-17	PX6159037819AN
101A-8462	LA465083U101	853009-18	PX6159037819AN
101A-8475	LA465083U102	853009-21	PX6666
101A-8477	LA465134U001	853009-22	PX8888
101A-8478	LA465386U001	853009-26	PX90-005-S2/MU90-088
101A-8479	LA465387U001	853009-8	PX90-010-S2/MU90-088
101A-8480	LA465406U001	85301-101E	PX90-015-S2/MU90-088
101A-8480-C	LA465408	85301-101E	PX90-050-S2/MU90-088
101A-8481	LA465409	85301-101X	PXA-F040MCB-0225A070
101A-8481-DA	LA465535U002	85301-101X	PXA-F040MCB-0225A070
101A-8481-YB	LA465596U001	85301-201X	PXA-F050MCB-0250A130
101A-8489	LA465945U001	85301-201X	PXA-F050MCB-0250A130
101A-8502	LA466030U001	85301-205	PXA-F050MCB-0360A190
101A-8503	LA466030U002	85301-205	PXA-F050MCB-0360A190
101A-8504	LA466038	854MTF	PXA-T025MCB-0025

101A-8505	LA466059U012	854MTF	PXA-T025MCB-0025
101A-8506	LA466059U017	858FIL	PXA-T025MCB-0050
101A-8507	LA466059U027	858FIL	PXA-T025MCB-0050
101A-8508	LA466059U122	859FIL	PXA-T025MCB-0075
101A-8509	LA466059U127	859FIL	PXA-T025MCB-0075
101A-8510	LA466454U001	85C-00P	PXA-T025MCB-0100
101A-8511	LA466497U104	85C-00S	PXA-T025MCB-0100
101A-8512	LA466711U001	85C-0AP	PXA-T025MCB-0150
101A-8513	LA466711U002	85CE-061L	PXA-T025MCB-0150
101A-8514	LA466717U001	85CE-0HP	PXA-T025MCB-0600
101A-8515	LA466717U002	85CE-1PE	PXA-T025MCB-0600
101A-8516	LA466717U003	85CE-XAM	PXA-T032MCB-0025
101A-8517	LA466819	85C-R01	PXA-T032MCB-0025
101A-8520	LA467452	85C-R02	PXA-T032MCB-0050
101A-8528	LA467461	85M	PXA-T032MCB-0050
101A-8530	LA467471U002	85M	PXA-T032MCB-0075
101A-8531	LA467688U001	8-5TRMTXSS	PXA-T032MCB-0075
101A-8532	LA467906U001	8-5TRTXS	PXA-T032MCB-0100
101A-8534	LA468288U002	85X	PXA-T032MCB-0100
101A-8535	LA468430U003	85X	PXA-T032MCB-0125
101A-8536	LA468430U103	8-6 B2HF-SS	PXA-T032MCB-0125
101A-8536-DA	LA468430U203	8-6 C5BU-S	PXA-T040MCB-0025
101A-8536-YC	LA468998U001	8-6 C5OLO-S	PXA-T040MCB-0025
101A-8537	LA469131U001	8-6 C5OX-S	PXA-T040MCB-0050
101A-8538	LA469708U002	8-6 CBZ-SS	PXA-T040MCB-0050
101A-8540	LA470443U001	8-6 DBZ-SS	PXA-T040MCB-0075
101A-8540-YC	LA471160U513	8-6 ELZ-SS	PXA-T040MCB-0075
101A-8549	LA471160U532	8-6 ETX-S	PXA-T040MCB-0100
101A-8551	LA471160U540	8-6 F5BU-S	PXA-T040MCB-0100
101A-8553	LA471171U540	8-6 F5OG5-S	PXA-T040MCB-0125
101A-8554	LA471171W540	8-6 F5OLO-S	PXA-T040MCB-0125
101A-8555	LA471175U500	8-6 F5OX-S	PXA-T040MCB-0150
101A-8555-DA	LA471343U115	8-6 FBMP7-SS	PXA-T040MCB-0150
101A-8555-YB	LA471343U230	8-6 FBZ-B	PXA-T040MCB-0200
101A-8556	LA471623U001	8-6 FBZ-SS	PXA-T040MCB-0200
101A-8559	LA471892U001	8-6 FH2BZ-SS	PXA-T040MCB-0300
101A-8561	LA482404U110	8-6 FHC-SS	PXA-T040MCB-0300
101A-8575	LA482471U018	8-6 FHC-SSHP	PXA-T050MCB-0050
101A-8586	LA482471U055	8-6 GBZ-SS	PXA-T050MCB-0050
101A-8588	LA482471U110	8-6 GH2BZ-SS	PXA-T050MCB-0075
101A-8692	LA482471U220	8-6 HBZ-B	PXA-T050MCB-0075
101A-8952	LA482472U110	8-6 HBZ-SS	PXA-T050MCB-0100
101A-8960	LA500326U001	8-6 HLO-S	PXA-T050MCB-0100
101A-8962	LA500958U001	8-6 HTX-S	PXA-T050MCB-0125
101A-8964	LA501935U001	8-6 LOHB3-S	PXA-T050MCB-0125
101A-8993	LA501991U300	8-6 LOHL6-S	PXA-T050MCB-0150
101A-9040	LA9-D901	8-6 MHN-625	PXA-T050MCB-0150
101A-9041	LA9-D901	8-6 MHN-B	PXA-T050MCB-0200
101A-9189	LAND10	8-6 MHN-M	PXA-T050MCB-0200
101A-9190	LAND10	8-6 MHN-SS	PXA-T050MCB-0250
101A-9206	LAUF52X1.5X	8-6 MHN-SSHP	PXA-T050MCB-0250
101A-9207	LB10003S	8-6 RA-625	PXA-T050MCB-0300
101A-9221	LB10006A	8-6 RA-B	PXA-T050MCB-0300

101A-9238	LB10007A	8-6 RA-M	PXA-T050MCB-0500
101A-9339	LB10007S	8-6 RA-SS	PXA-T050MCB-0500
101A-9340	LB10034S	8-6 RA-SSHP	PXA-T050MCB-0600
101A-9401	LB10035A	8-6 RB-625	PXA-T050MCB-0600
101A-9403	LB10039S	8-6 RB-B	PXA-T050MCB-0800
101A-9404	LB10041A	8-6 RB-HC	PXA-T050MCB-0800
101A-9475	LB10076S	8-6 RBK-SS	PXA-T063MCB-0050
101A-9476	LB10140A	8-6 RB-S	PXA-T063MCB-0050
101A-9570	LB10202A	8-6 RB-SS	PXA-T063MCB-0075
101A-9639	LB10210S	8-6 RB-SSHP	PXA-T063MCB-0075
101A-9703	LB10212S	8-6 T2HF-SS	PXA-T063MCB-0100
101A-9737	LB10215S	8-6 T2HG-SS	PXA-T063MCB-0100
101A-9802	LB10251A	8-6 TL-S	PXA-T063MCB-0125
101A-9830	LB10251S	8-6 TRBMP7-SS	PXA-T063MCB-0125
101A-9835	LB10259A	8-6 TRBU-S	PXA-T063MCB-0150
101A-9836	LB10259S	8-6 TRBZ-SS	PXA-T063MCB-0150
101A-9932	LB10310A	8-6 TRTX-B	PXA-T063MCB-0175
101B-0182	LB10310S	8-6 TRTX-SS	PXA-T063MCB-0175
101B-0219	LB10312A	8-6 TRW-SS	PXA-T063MCB-0200
101B-0313	LB10312S	8-6 V5OLO-S	PXA-T063MCB-0200
101B-0315	LB10313S	8-6 V5OX-S	PXA-T063MCB-0410
101B-0472	LB10316S	8-6 VBZ-SS	PXA-T063MCB-0410
101B-0596	LB10325S	8-6 ZHBA-SS	PXA-T063MCB-0450
101B-0792	LB10505A	86.18.243.26	PXA-T063MCB-0450
101B-0964	LB10506S	86.18.243.31	PXA-T063MCB-0500
101B-0965	LB10515S	86.18.308.32	PXA-T063MCB-0500
101B-1190	LB10525S	86.20.024.31	PXA-T063MCB-0700
101B-1294	LB10544S	86.44.024.31	PXA-T063MCB-0700
101B-1298	LB10545A	860062-10	PXA-T063MTB-0100
101B-1309	LB10545S	860062-11	PXA-T063MTB-0100
101B-1358	LB10554S	860062-12	PXA-T080MBC-0075
101B-1387	LB10563A	860062-13	PXA-T080MBC-0075
101B-1389	LB10575A	860062-14	PXA-T080MCB-0050
101B-1489	LB10575S	860062-15	PXA-T080MCB-0050
101B-1595	LB10591A	860062-16	PXA-T080MCB-0075
101B-1761	LB10707S	860062-17	PXA-T080MCB-0075
101B-1812	LB10711S	860062-18	PXA-T080MCB-0100
101B-2276	LB10715S	860062-19	PXA-T080MCB-0100
101B-2306	LB10716S	860062-20	PXA-T080MCB-0125
101B-2459	LB10720S	860062-22	PXA-T080MCB-0125
101B-2872	LB10721S	860062-24	PXA-T080MCB-0150
101B-2873	LB10781S	860062-26	PXA-T080MCB-0150
101B-2890	LB10786A	860062-30	PXA-T080MCB-0200
101B-2891	LB10786S	860062-32	PXA-T080MCB-0200
101B-2893	LB10806S	860062-36	PXA-T080MCB-0800
101B-2910	LB316CFX	860062-6	PXA-T080MCB-0800
101B-2911	LB316SSX	860062-7	PXA-T100MCB-0050
101B-2927	LB320CFX	860062-8	PXA-T100MCB-0050
101B-2958	LB320SSX	860062-9	PXA-T100MCB-0075
101B-2999	LB324CFX	860062-KIT	PXA-T100MCB-0075
101B-3043	LB324SSX	860062-KIT2	PXA-T100MCB-0100
101B-3067	LB332CFX	860062-LKIT	PXA-T100MCB-0100
101B-3068	LB332SSX	860062-XUKIT	PXA-T100MCB-0150

101B-3069	LB340CFX	860063-10	PXA-T100MCB-0150
101B-3077	LB340SSX	860063-11	PXA-T100MCB-0200
101B-4273	LB348CFX	860063-12	PXA-T100MCB-0200
101B-4275	LB364CFX	860063-13	PXA-T100MCB-0250
101B-4276	LB380CFX	860063-14	PXA-T100MCB-0250
101B-4898	LB432CFX	860063-16	PXA-T100MCB-0300
101B-5110	LB43313TF	860063-17	PXA-T100MCB-0300
101B-5893	LB43313TF	860063-19	PXA-T100MCB-0400
101B-5897	LB43314S	860063-20	PXA-T100MCB-0400
101B-5897-C	LB43314S	860063-21	PXA-T100MCB-0700
101B-6322	LB43314TA	860063-22	PXA-T100MCB-0700
101B-6324	LB43314TA	860063-24	PXA-T100MTB-0150
101B-6325	LB43314TF	860063-27	PXA-T100MTB-0150
101B-6327	LB43314TF	860063-30	PXA-T100MTB-0200
101B-6328	LB440CFX	860063-32	PXA-T100MTB-0200
101B-6329	LB448CFX	860063-36	PXA-T125MCB-0125
101B-6331	LB464CFX	860063-41	PXA-T125MCB-0125
101B-6332	LB53013BS17AS	860063-46	PXA-T125MCB-0250
101B-6334	LB53013BS17AS	860063-8	PXA-T125MCB-0250
101B-6337	LB53013S	860063-KIT	PXA-T125MTB-0100
101B-6394	LB53013S	8611-023-00N	PXA-T125MTB-0100
101B-6411	LB53013TA	8611-023-00V	PXB-B2011BA4
101B-6414	LB53013TA	8611-023-0NH	PXB-B2011BA4
101B-6745	LB53013TF	8611-023-Q1N	PXB-B2922
101B-7170	LB53013TF	8611-023-U1B	PXB-B2922
101B-7171	LB53014MS	8624B-11	PXB-B3111B
101B-7172	LB53014MS	8624B-11	PXB-B3111B
101B-7220	LB53014MTF	8630-023-000	PXB-B3111BA2
101B-7303	LB53014MTF	8-6-6 JBZ-SS	PXB-B3111BA2
101B-7304	LB53014S	8-6-6 JLZ-M	PXB-B3111BA2-EX
101B-7560	LB53014S	8-6-6 JLZ-SS	PXB-B3111BA2-EX
101B-8357	LB53014TA	8676-023-00N	PXB-B3111BA3
101B-8368	LB53014TA	8677-023-000	PXB-B3111BA3
101B-9442	LB53014TF	8677-023-0NE	PXB-B3111BA3-EX
101B-9638	LB53014TF	8-6-8 JLZ-SS	PXB-B3111BA3-EX
101B-9748	LB53014TL	8-6-8 MBZ-SS	PXB-B3111BA4
101B-9786	LB53014TL	8-6-8 RBZ-SS	PXB-B3111BA4
101B-9787	LB53024MS	8682-016-00L	PXB-B3111BA4-EX
101B-9885	LB53024MS	8682-023-00N	PXB-B3111BA4-EX
101B-9886	LB53024MTF	8682-023-00V	PXB-B3111BC2
101BL-6-06	LB53024MTF	8682-023-T3N	PXB-B3111BC2
101BL-8-08	LB53024S	8682-058-00M	PXB-B3111BC2-EX
101BS-8-08	LB53024S	8-6-8JMTXS	PXB-B3111BC2-EX
101C-0169	LB53024TF	8-6C5OMLOSS	PXB-B3111BD2
101C-0289	LB53024TF	8-6C5OMXS	PXB-B3111BD2
101C-0473	LB53024TL	8-6C5OMXSS	PXB-B3111BD2-EX
101C-0474	LB53024TL	8-6F3T4S	PXB-B3111BD2-EX
101C-0474-C	LB616CFX	8-6F5MLS	PXB-B3111BT4
101C-0475	LB620CFX	8-6F5OMLO109442S	PXB-B3111BT4
101C-0484	LB624CFX	8-6F5OMLOS	PXB-B3121B
101C-0487	LB632CFX	8-6F5OMXS	PXB-B3121B
101C-0487-C	LBB080EH00660SLN00000NNN	8-6F5OMXSS	PXB-B3121BT4
101C-0488	LBB080EH00800FLQ00000CNN	8-6F6MK4S	PXB-B3121BT4

101C-0489	LBB080EH00800FRB00000CNN	8-6F6MK4SS	PXB-B3211BD2
101C-0489-C	LBB080EH00800FRR00000CNN	8-6GC GBZ-SS	PXB-B3211BD2
101C-2084	LBB080EH00818NRQ00000CNN	8-6H6MK4S	PXB-B3211BD3
101C-2085	LBB080EH01200FRR00000CNN	8-6H6MK4SS	PXB-B3211BD3
101C-2757	LBB080EH01700NLR00450CNN	8-6HMK4S	PXB-B3211BJ5
101C-2781	LBB080EH02520SRN00000NNN	8-6HMK4SS	PXB-B3211BJ5
101C-3000	LBB080EH04400SRN00000NNN	8-6HMTXSS	PXB-B3251BA2
101C-3374	LBB080EP00200NLQ01140CNN	8-6K CBZ-SS	PXB-B3251BA2
101C-3927	LBB080EP00470LRQ00000CNN	8-6K FBZ-SS	PXB-B3251BD2
101C-3928	LBB080EP00470LRQ00000NNN	8-6K GBZ-SS	PXB-B3251BD2
101C-3934	LBB080EP00470SLN00000CNN	86KBAW13MVX	PXB-B3251BD3
101C-4288	LBB080EP00500NRB00000NNN	86KBAW17MVX	PXB-B3251BD3
101C-4289	LBB080EP00740NLQ01400NNN	86KBAW17MVXSL	PXB-B3252BD2Q100
101C-4291	LBB080EP00800NLQ00000NNN	86KBIW10MVX	PXB-B3252BD2Q100
101C-5072	LBB080EP00850NLA00000NNN	86KBIW13MVX	PXB-B3252BD2Q20
101C-5162	LBB080EP00925NRB01100NNN	86KBPH10MVX	PXB-B3252BD2Q20
101C-5204	LBB080EP01000NLA00000NNN	86KBPR06MVX	PXB-B3911
101C-5253	LBB080EP01000NLQ00000NNN	86KBPR10MVX	PXB-B3911
101C-5260	LBB080EP01000NRQ00000NNN	86KBTF06MVX	PXB-B3911-EX
101C-5260-C	LBB080EP01100NLQ00000NNN	86KBTF08MVX	PXB-B3911-EX
101C-5405	LBB080EP01100SRN00000NNN	86KBTF09MVX	PXB-B3912
101C-5753	LBB080EP01200FLB00000CNN	86KBTH06MVX	PXB-B3912
101C-5931	LBB080EP01200FLQ00000CNN	86KBTH09MVX	PXB-B3915
101C-5960	LBB080EP01200FRB00000CNN	86KBTP06MVX	PXB-B3915
101C-5962	LBB080EP01200NLQ00000CVN	86KBTP10MVX	PXB-B3921
101C-5963	LBB080EP01360FLQ00000NNN	86KBTR06MVX	PXB-B3921
101C-6133	LBB080EP01400NRB00000CNN	86KBTR09MVX	PXB-B3921-EX
101C-6134	LBB080EP01408SLN00000NNN	86KFAW13MVX	PXB-B3921-EX
101C-6298	LBB080EP01495SLN00000NNN	86KFAW17MVX	PXB-B3922
101C-6301	LBB080EP01500NLB02400NNN	86KFAW17MVXSL	PXB-B3922
101C-6373	LBB080EP01550NLQ00000CNN	86KFIW10MVX	PXB-B3925
101C-6480	LBB080EP01600FRA00000NNN	86KFIW13MVX	PXB-B3925
101C-6483	LBB080EP01600NLQ02000NNN	86KFTF06MVX	PXB-B4/3002224
101C-6509	LBB080EP01620SLN00000NNN	86KFTF09MVX	PXB-B4/3002224
101C-6515	LBB080EP01633NLQ00600NNN	86KFTF09MVXSL	PXB-B4/3002256
101C-6539	LBB080EP01650NRQ00000CNN	86KFTH06MVX	PXB-B4/3002256
101C-6561-C	LBB080EP01650SLN00000NNN	86KFTH09MVX	PXB-B4/3002257
101C-6744	LBB080EP01700NRQ00320CVN	86KFTP06MVX	PXB-B4/3002257
101C-6895	LBB080EP01770SLN00000NNN	86KFTP10MVX	PXB-B4131B
101C-7174	LBB080EP01800FLQ00000NNN	86KFTR06MVX	PXB-B4131B
101C-7174-DA	LBB080EP01800NLQ00000NNN	86KFTR09MVX	PXB-B4131BA2
101C-7174-YB	LBB080EP01800SLN00000NNN	86KFTR09MVXSL	PXB-B4131BA2
101C-7192	LBB080EP01850SLN00000CNN	86P-ALH-06	PXB-B4131BA2-EX
101C-7207	LBB080EP01850SRN00000CNN	86P-ALH-10	PXB-B4131BA2-EX
101C-7207-YB	LBB080EP01893SLN00000NNN	8-6R FBZ-SS	PXB-B4131BA3
101C-7308	LBB080EP01920NRB00000NNN	8-6RB-6MO	PXB-B4131BA3
101C-8853	LBB080EP01926FRQ00000NNN	8-6RB-825	PXB-B4131BA4
101C-8954-DA	LBB080EP01950SLN00000NNN	86SBAK13MVX	PXB-B4131BA4
101C-8981	LBB080EP02043SLN00000NNN	86SBAW13MEX	PXB-B4131BC2
101C-9474	LBB080EP02080NLB01000NNN	86SBAW13MVX	PXB-B4131BC2
101EX-2-012	LBB080EP02200NLQ00000NNN	86SFAK10MXX	PXB-B4131BC2-EX
101EX-2-025	LBB080EP02200NRQ00250CNN	86SFAK13MXX	PXB-B4131BC2-EX
101EX-4-012	LBB080EP02243SLN00000NNN	86SFAK17MXX	PXB-B4131BD2

101EX-4-025	LBB080EP02300FLQ00000NNN	86SFAM10MXX	PXB-B4131BD2
101F-0127	LBB080EP02308SLN00000NNN	86SFAR10MXX	PXB-B4131BD2-EX
101F-0138	LBB080EP02338SLN00000NNN	86SFAR10MXX_03	PXB-B4131BD2-EX
101F-0245	LBB080EP02535NRQ01620NNN	86SFAR10MXX_05	PXB-B4131BT4
101F-0925	LBB080EP02900NRQ00000CNN	86SFAR13MXX	PXB-B4131BT4
101F-0926	LBB080EP03000FRQ00000NNN	86SFAW13MXX	PXB-B4132B
101F-0927	LBB080EP03000NRQ00000NNN	86SFIW10MXX	PXB-B4132B
101F-0928	LBB080EP03100NLA00000NNN	86SFIW10SXN	PXB-B4135A
101F-0996	LBB080EP03208SLN00000NNN	86SFIW13MXX	PXB-B4135A
101F-0997	LBB080EP03500FLB00000NNN	86SFIW13SXN	PXB-B4135B
101F-1089	LBB080EP04500NLQ00000NNN	86SFIW17MXX	PXB-B4135B
101F-1113	LBB080EP04508NRB01000NNN	86SFTF09MXX	PXB-B4231B
101F-1277	LBB080EP04508NRB02280NNN	8-6TRMLONS	PXB-B4231B
101F-1350	LBB080EP04600NLB00000NNN	8-6TRMLONSS	PXB-B4231BA2
101F-1351	LBB080EP05100NRB02720NNN	8-6TRMTXSS	PXB-B4231BA2
101F-1356	LBB080EP05300NLQ00000NNN	8-6TRTXS	PXB-B4231BD2
101F-1440	LBB080FP01040NLQ00500NNN	8-6V5OMLOS	PXB-B4231BD2
101F-1478	LBB080FP01950FLQ00000NNN	8-6V5OMXS	PXB-B4231BD3
101F-1478-C	LBB080SH00600NLQ00000CNN	86VN1010MXX	PXB-B4231BD3
101F-1480	LBB080SH00800RLR00000CNN	86VN1015MXX	PXB-B4231BJ5
101F-1484	LBB080SH02600FRR00000CNN	86VN1015MXXS_01	PXB-B4231BJ5
101F-1623	LBB080SH07730NRQ00000CNL	86VN1020MXX	PXB-B4931
101F-1745	LBB080SP00200NLQ01190NVN	86VN1025MXX	PXB-B4931
101F-1768	LBB080SP00400NLQ00000NNN	86VN1310MXX	PXB-B4931-EX
101F-1769	LBB080SP00400NRQ00000NNN	86VNXX05MXX	PXB-B4931-EX
101F-1770	LBB080SP00500FRQ00000NNN	86VNXX10MXX	PXB-B4932
101F-1771	LBB080SP00500NLQ00000CNN	86VNXX15MXX	PXB-B4932
101F-1772	LBB080SP00550NLK00000NNN	86VNXX20MXX	PXB-B4935
101F-1859	LBB080SP00560NLQ00000CNN	86VNXX25MXX	PXB-B4935
101F-2141	LBB080SP00588NLR00700CNN	87.23.000.26	PXC-J111
101F-2280	LBB080SP00600NLQ00000CNN	87-07H644-75	PXC-J111
101F-2281	LBB080SP00600NLQ02300NNN	87-07H644-75	PXC-J11101
101F-2316	LBB080SP00600NRA00000NNN	870XAFJP-D3AC	PXC-J11101
101F-2760	LBB080SP00620FRB00000CVN	870XAFJP-D5RY	PXC-J1110111
101F-2761	LBB080SP00650FLQ00000NNN	870XDFJP-D3AB	PXC-J1110111
101F-3360	LBB080SP00650NLB00000CNN	870XDFJP-D5AC	PXC-J1110131
101F-3939	LBB080SP00650NLE00000CNN	870XDFJP-D5RY	PXC-J1110131
101F-8448-YB	LBB080SP00700NLB00000CNN	870XDFJP-D5XV	PXC-J1110151
101HP-4-4	LBB080SP00700NLK00000NNN	87-11H644-75	PXC-J1110151
101HP-6-4	LBB080SP00700NLQ00000CNN	87-11H644-75	PXC-J11105
101LX-16-16	LBB080SP00750FLQ00000NNN	87-21H643-75	PXC-J11105
101LX-4-03	LBB080SP00750FLR00000CNN	87-21H643-75	PXC-J1110511
101LX-4-04	LBB080SP00750NLB00000CNN	87-21H643-75	PXC-J1110511
101LX-6-06	LBB080SP00750NLR00000CNN	87-21H643-75	PXC-J1110531
101LX-8-06	LBB080SP00800FLQ00000NNN	87-24H643-75	PXC-J1110531
101NX-16-16	LBB080SP00800NLA00000NNN	87-24H643-75	PXC-J1110551
101NX-4-04	LBB080SP00800NLB00000CNN	8726A	PXC-J1110551
101NX-4-04C	LBB080SP00800NLB00000NVN	8726A	PXC-J11162
101NX-6-04	LBB080SP00800NLB01000CNN	8766-023-00N	PXC-J11162
101NX-6-06	LBB080SP00800NLB01150CNN	8766-023-00V	PXC-J11170
101NX-6-06C	LBB080SP00800NLQ00000CNN	87-67H643-75	PXC-J11170
101NX-8-08	LBB080SP00800NLQ00000NNN	87-67H643-75	PXC-J118
101NX-8-08C	LBB080SP00800NRB01000CNN	8772-023-00S	PXC-J118

101PC-4-04	LBB080SP00800NRB01150CNN	87-76H644-75	PXC-J11801
101PC-6-06	LBB080SP00810NLB00000CNN	87-76H644-75	PXC-J11801
101PC-8-08	LBB080SP00850NLB00000CNN	8781FIL	PXC-J1180111
101PX-2-03	LBB080SP00860NLB00000CNN	8781FIL	PXC-J1180111
101PX-4-03	LBB080SP00890NLB00000CNN	8782-023-00N	PXC-J1180131
101PX-4-04	LBB080SP00900NLB00000CNN	8782-023-00V	PXC-J1180131
101PX-6-04	LBB080SP00900NLB02259CNN	8787-11	PXC-J1180151
101PX-6-05	LBB080SP00900NLQ00000CNN	8787-11	PXC-J1180151
101PX-6-06	LBB080SP00900NLQ00000NNN	8788-11	PXC-J11805
101PX-8-08	LBB080SP00922NLB00000CNN	8788-11	PXC-J11805
101RS-8-08	LBB080SP00950NLB00000CNN	87-HEY1265A	PXC-J1180531
101S6-32-32	LBB080SP00950NLQ00000CNN	87-HEY1265A	PXC-J1180531
101TX-2-025W	LBB080SP00965NLB00000CNN	87KBAW13MVX	PXC-J11861
101TX-4-04W	LBB080SP00970FRQ00000NNN	87KBAW17MVX	PXC-J11861
101YX-12-10	LBB080SP01000FRB00000CNN	87KBAW17MVXSL	PXC-J11870
101YX-2-03	LBB080SP01000NLA00000CNN	87KBAW21MVX	PXC-J11870
101YX-4-04	LBB080SP01000NLB00000CNN	87KBIW13MVX	PXC-J121
101YX-4-06	LBB080SP01000NLE00000NNN	87KBIW17MVX	PXC-J121
101YX-8-08	LBB080SP01000NLM02080CNN	87KBPR10MVX	PXC-J12101
1020-0453	LBB080SP01000NLQ00000CNN	87KBTF09MVX	PXC-J12101
102-008100	LBB080SP01030NLB00000CNN	87KBTF13MSX	PXC-J1210111
10202FIL	LBB080SP01050NLB00000CNN	87KBTF13MVX	PXC-J1210111
10202FIL	LBB080SP01050NLB02300CNN	87KBTF13MVXSL	PXC-J1210131
10204FIL	LBB080SP01050NLQ00000CNN	87KBTH09MVX	PXC-J1210131
10204FIL	LBB080SP01050NLQ00000NNN	87KBTH13MSX	PXC-J1210151
10205FIL	LBB080SP01050NRQ00700NNN	87KBTH13MVX	PXC-J1210151
10205FIL	LBB080SP01100NLB00000CNN	87KBTP10MVX	PXC-J12105
1020-6334	LBB080SP01125NLQ00000CNN	87KBTP13MVX	PXC-J12105
1020-6903	LBB080SP01150NLB00000CNN	87KBTR09MVX	PXC-J1210531
1020-7310	LBB080SP01150NLM00000NNN	87KBTR13MSX	PXC-J1210531
1020-7375	LBB080SP01175NLQ00000CNN	87KBTR13MVX	PXC-J1210551
1020-7597	LBB080SP01190NRQ00000NNN	87KFAW13MVX	PXC-J1210551
10207FIL	LBB080SP01200FLM00000NNN	87KFAW13MVXSL	PXC-J12161
10207FIL	LBB080SP01200NLB00000CNN	87KFAW17MVX	PXC-J12161
10208/61/2	LBB080SP01200NLK00000NNN	87KFAW17MVXSL	PXC-J128
1020-8613	LBB080SP01200NLQ00000CNN	87KFAW21MVX	PXC-J128
1020-8764	LBB080SP01225NLB00000CNN	87KFIW13MVX	PXC-J12801
1020-8912	LBB080SP01250NLB00000CNN	87KFIW17MVX	PXC-J12801
10208FIL	LBB080SP01250NLQ00000CNN	87KFTF09MVX	PXC-J1280111
10208FIL	LBB080SP01288NRQ00000CNN	87KFTF09MVXSL	PXC-J1280111
1020-9447	LBB080SP01300FLQ00000CNN	87KFTF13MVX	PXC-J1280151
1020-9591	LBB080SP01300NLB00000CNN	87KFTF13MVXSL	PXC-J1280151
1020-9965	LBB080SP01300NLQ00000CNN	87KFTH09MVX	PXC-J1280531
1020-9990	LBB080SP01300NLQ00320NNN	87KFTH09MVXSL	PXC-J1280531
1020FIL	LBB080SP01330NLB00000CNN	87KFTH11MVX	PXC-J12861
1020FIL	LBB080SP01330NRB00000CNN	87KFTH13MVX	PXC-J12861
10211FIL	LBB080SP01350NLB00000CNN	87KFTH13MVXSL	PXC-K211
10211FIL	LBB080SP01400FLR00000CNN	87KFTP10MVX	PXC-K211
10212FIL	LBB080SP01400NLB00000CNN	87KFTP13MVX	PXC-K21101
10212FIL	LBB080SP01400NLQ00000CNN	87KFTR09MVX	PXC-K21101
10213FIL	LBB080SP01400NRQ00000NVN	87KFTR13MVX	PXC-K21102
10213FIL	LBB080SP01415NLB00000CNN	87KFTR13MVXSL	PXC-K21102
10214FIL	LBB080SP01420FRQ00000NNN	87SBAK13MVX	PXC-K21105

10214FIL	LBB080SP01435NLR00900NVN	87SBAK17MVX	PXC-K21105
102-150015	LBB080SP01450NLB00000CNN	87SBAK21MVX	PXC-K2110531
102-150201	LBB080SP01450NLQ00000CNN	87SBAN21MVX	PXC-K2110531
102-150230	LBB080SP01490NLM01980CNN	87SBAW13MVX	PXC-K2110541
10215FIL	LBB080SP01490NRQ00000NNN	87SBAW17MVX	PXC-K2110541
10215FIL	LBB080SP01500NLB01420CNN	87SFAK13MXX	PXC-K21106
10216FIL	LBB080SP01500NLK00000CNN	87SFAK17MXX	PXC-K21106
10216FIL	LBB080SP01500NLM00000CNN	87SFAK21MXX	PXC-K21121
10217FIL	LBB080SP01500NLM00000NNN	87SFAR13MXX	PXC-K21121
10217FIL	LBB080SP01500NLQ00000CNN	87SFAR17MXX	PXC-K215
10218FIL	LBB080SP01550FRQ00000CNN	87SFAW13MXX	PXC-K215
10218FIL	LBB080SP01550NLB00000CNN	87SFAW17MXX	PXC-K221
10218FIL	LBB080SP01550NLQ00000CNN	87SFIW10MXX	PXC-K221
10218FIL	LBB080SP01575NLB00000CNN	87SFIW13MXX	PXC-K22101
10219FIL	LBB080SP01600NLB00000CNN	87SFIW13SXN	PXC-K22101
10219FIL	LBB080SP01600NLB01890CNN	87SFIW17MXX	PXC-K22102
10219FIL	LBB080SP01600NLQ00000CNN	87SFIW17SXN	PXC-K22102
10219FIL	LBB080SP01600NLQ01918CNN	87SFTF13MXX	PXC-K22105
10220FIL	LBB080SP01650NLB00000CNN	87VN1305MXX	PXC-K22105
10220FIL	LBB080SP01650NLQ00000CNN	87VN1310MXX	PXC-K2210531
10222FIL	LBB080SP01650NRB00000CNN	87VN1315MXX	PXC-K2210531
10222FIL	LBB080SP01658FLQ00000NNN	87VN1325MXX	PXC-K2210541
10224FIL	LBB080SP01700NLB00000CNN	87VN1710MXX	PXC-K2210541
10224FIL	LBB080SP01700NLQ00000CNN	87VNXX05MXX	PXC-K22106
10225FIL	LBB080SP01700NLQ01918CNN	87VNXX10MXX	PXC-K22106
10225FIL	LBB080SP01730NLB00000CNN	87VNXX15MXX	PXC-K22121
10226FIL	LBB080SP01750NLB00000CNN	87VNXX20MXX	PXC-K22121
10226FIL	LBB080SP01750NLQ00000CVN	87VNXX25MXX	PXC-M111-EX
10227FIL	LBB080SP01750NLQ00610NNN	8-8 B2HF-B	PXC-M111-EX
10227FIL	LBB080SP01750NLQ01918CNN	8-8 B2HF-SS	PXC-M115
10228FIL	LBB080SP01750NRQ00000CVN	8-8 C4BU-S	PXC-M115
10228FIL	LBB080SP01800NLB00000CNN	8-8 CBU-S	PXC-M121
10229FIL	LBB080SP01850NLQ00000CNN	8-8 CBU-SS	PXC-M121
10229FIL	LBB080SP01850NLQ00000NNN	8-8 CBZ-B	PXC-M125
1022FIL	LBB080SP01900NLB00000CNN	8-8 CBZ-SS	PXC-M125
1022FIL	LBB080SP01900NRQ00000NNN	8-8 CCCTX-S	PXC-M131
10231FIL	LBB080SP01940NLB00000CNN	8-8 CCTX-S	PXC-M131
10231FIL	LBB080SP01950NLB00000CNN	8-8 CLO-S	PXC-M131-EX
10232-01100	LBB080SP01950NLK00000NNN	8-8 CLO-S V0894	PXC-M131-EX
10232-01100	LBB080SP01950NLQ00000CNN	8-8 CTX-B	PXC-M135-EX
10232-01400	LBB080SP02000FLB00000CNN	8-8 CW-SS	PXC-M135-EX
10232-01400	LBB080SP02000FLR00000CNN	8-8 CW-SS	PXC-M521
10233-00160	LBB080SP02000NLB00000CNN	8-8 DBZ-SS	PXC-M521
10233-00160	LBB080SP02000NLQ00000CNN	8-8 DTX-S	PXC-M521-EX
10233-00200	LBB080SP02000NRQ00000NNN	8-8 DTX-SS	PXC-M521-EX
10233-00200	LBB080SP02100NLB00000CNN	8-8 DW-SS	PXC-M525
10233-00250	LBB080SP02100NLQ01918CNN	8-8 EBMP7-SS	PXC-M525
10233-00250	LBB080SP02125NLB00000CNN	8-8 EBZ-B	PXC-M601A102
10233-00262	LBB080SP02150NRA00000NNN	8-8 EBZ-SS	PXC-M601A102
10233-00262	LBB080SP02200FLQ00000NNN	8-8 F6X-S	PXC-M601A103
10233-00500	LBB080SP02200FRQ00000NNN	8-8 FBMP7-SS	PXC-M601A103
10233-00500	LBB080SP02200NLB00000CNN	8-8 FBU-S	PXC-M601A110
10233-00520	LBB080SP02200NLQ00000CNN	8-8 FBU-SS	PXC-M601A110

10233-00520	LBB080SP02200NLQ01918CNN	8-8 FBZ-B	PXC-X14
10233-00640	LBB080SP02200NRQ00000NNN	8-8 FBZ-SS	PXC-X14
10233-00640	LBB080SP02250NLA00000NNN	8-8 FE-625	PXC-Z11
10233-00650	LBB080SP02250NLQ00000NNN	8-8 FE-6MO	PXC-Z11
10233-00650	LBB080SP02300NLB00000CNN	8-8 FE-B	PXD-A115
10233-00700	LBB080SP02300NLF00000CNN	8-8 FE-HC	PXD-A115
10233-00700	LBB080SP02300NLQ00000CNN	8-8 FE-M	PXF-A111
10233-00750	LBB080SP02300NRQ02570CNN	8-8 FE-SS	PXF-A111
10233-00750	LBB080SP02300NRQ02970CNN	8-8 FE-SSHP	PXF-A121
10233-00770	LBB080SP02325NLB00000CNN	8-8 FE-TI	PXF-A121
10233-00770	LBB080SP02330NRM00000CNN	8-8 FH2BZ-SS	PXF-A125
10233-00800	LBB080SP02350NLB00000CNN	8-8 FH4BZ-B	PXF-A125
10233-00800	LBB080SP02350NRB00000CNN	8-8 FH4BZ-SS	PXF-A131
10233-00850	LBB080SP02400NLQ00000CNN	8-8 FHC-625	PXF-A131
10233-00850	LBB080SP02450NLB00000CNN	8-8 FHC-6MO	PXF-A135
10233-00900	LBB080SP02458SLN00000NNN	8-8 FHC-B	PXF-A135
10233-00900	LBB080SP02475NRK00000CVN	8-8 FHC-HC	PXN-T050MCB-0025
10233-00910	LBB080SP02500NLB00000CNN	8-8 FHC-M	PXN-T050MCB-0025
10233-00910	LBB080SP02540DLA00000NNN	8-8 FHCR-SS	PXP-A11
10233-01000	LBB080SP02620SLN00000NNN	8-8 FHC-SS	PXP-A11
10233-01000	LBB080SP02700NLB01918CNN	8-8 FHC-SSHP	PXP-C111
10233-01270	LBB080SP02700NRB00000CNN	8-8 FHC-SS-NC	PXP-C111
10233-01270	LBB080SP02750NLQ00000NNN	8-8 FHOA-SS	PXP-D121
10233-01400	LBB080SP02900NLA00000CNN	8-8 FLO-S	PXP-D121
10233-01400	LBB080SP02900NLB00000CNN	8-8 FLO-SS	PXP-S111
10233-01500	LBB080SP02900NLQ00000CNN	8-8 FTX-B	PXP-S111
10233-01500	LBB080SP02950NLB00000CNN	8-8 FVE-SS	PXP-S121
10233-01550	LBB080SP03080NRQ00000NNN	8-8 FW-SS	PXP-S121
10233-01550	LBB080SP03440NLQ00000CNN	8-8 G6X-S	PXV-F111
10233-01600	LBB080SP03558SLN00000NNN	8-8 G6X-SS	PXV-F111
10233-01600	LBB080SP03800NLB01920CNN	8-8 GBMP7-SS	PXV-F1114
10233-01620	LBB080SP03800NLQ01918CNN	8-8 GBU-S	PXV-F1114
10233-01620	LBB080SP03900NLA00000NNN	8-8 GBU-SS	PXV-F1116
10233-01700	LBB080SP04200NRA00000NNN	8-8 GBZ-SS	PXV-F1116
10233-01700	LBB080SP04400NLB02058CNN	8-8 GH2BZ-SS	PXV-F111-EX
10233-01800	LBB080SP05000NLK00000CNN	8-8 GTX-S	PXV-F111-EX
10233-01800	LBB080SP05310FLQ00000NVN	8-8 GW-SS	PXV-F115
10233-02200	LBB080SP05350FLQ00000NNN	8-8 HBZ-B	PXV-F115
10233-02200	LBB080SP05350FLQ00000NVN	8-8 HBZ-SS	PXV-F1211
10233-02500	LBB080SP06100NLB00000CNN	8-8 MCN-6MO	PXV-F1211
10233-02500	LBB080SP06100NLQ00000CNN	8-8 MCN-B	PXV-F1213
10233-02600	LBB080TP00600NRE00000NNN	8-8 MCN-M	PXV-F1213
10233-02600	LBB120EH01974NLQ00000NNN	8-8 MCN-SS	PXV-F1213-EX
10233-03240	LBB120EH02509NLQ00000NNN	8-8 ME-B	PXV-F1213-EX
10233-03240	LBB120EH03059NRQ00000NNN	8-8 ME-SS	PXV-F1214
10233-03875	LBB120EH03200FLR00000NNN	8-8 ME-SSHP	PXV-F1214
10233-03875	LBB120EH09760NLB00000NNN	8-8 MHLN-3.0-SSHP	PXV-F1214-EX
102-3333-03	LBB120EP00500NRC00000NNN	8-8 MHLN-4.0-SSHP	PXV-F1214-EX
10234-00080	LBB120EP00620NLQ00000NNN	8-8 MHLN-625 2.0	PXV-F1216
10234-00080	LBB120EP00620NRQ00000NNN	8-8 MHLN-625 3.0	PXV-F1216
10234-00160	LBB120EP00635NRB00000NNN	8-8 MHLN-6MO 2.0	PXV-F131
10234-00160	LBB120EP01000NLQ00000NNN	8-8 MHLN-6MO 3.0	PXV-F131
10234-00200	LBB120EP01600NLC00000NNN	8-8 MHLN-6MO 4.0	PXV-F1311

10234-00200	LBB120EP01600NLG00000NNN	8-8 MHLN-6MO 6.0	PXV-F1311
10234-00250	LBB120EP01750NLB00000NVN	8-8 MHLN-825 2.0	PXV-F1314
10234-00250	LBB120EP02000NLQ00000NNN	8-8 MHLN-825 3.0	PXV-F1314
10234-00500	LBB120EP02000NRB00000NNN	8-8 MHLN-825 4.0	PXV-F1314-EX
10234-00500	LBB120EP02600NLQ00000NNN	8-8 MHLN-HC 2.0	PXV-F1314-EX
10234-00520	LBB120EP03050NLQ00000CNN	8-8 MHLN-HC 3.0	PXV-F131-EX
10234-00520	LBB120EP03160NLB00000NNN	8-8 MHLN-M 2.0	PXV-F131-EX
10234-00640	LBB120EP03200NLR02620CNN	8-8 MHLN-M 3.0	PXV-F135
10234-00640	LBB120EP03435NRC00410NNN	8-8 MHLN-M 4.0	PXV-F135
10234-00650	LBB120EP04250NLB00000NNN	8-8 MHLN-M 6.0	PXV-F1354
10234-00650	LBB120EP04255NRC00410NNN	8-8 MHLN-SS 2.0	PXV-F1354
10234-00700	LBB120EP04400NRC00920NVN	8-8 MHLN-SS 3.0	PXV-F141
10234-00700	LBB120EP04800NLG00000NVN	8-8 MHLN-SS 4.0	PXV-F141
10234-00770	LBB120EP05135NLQ01160NNN	8-8 MHLN-SS 4.0-NC	PXV-F1411
10234-00770	LBB120EP05135NLQ01360NNN	8-8 MHLN-SS 6.0	PXV-F1411
10234-00850	LBB120FP00900NLR00370NNN	8-8 MHLN-TI 3.0	PXV-F1413
10234-00850	LBB120FP02010NLC00620NNN	8-8 MHLN-TI 4.0	PXV-F1413
10234-00900	LBB120FP02010NRC00620NNN	8-8 MHN-625	PXV-F141-EX
10234-00900	LBB120FP02025NLC00550NNN	8-8 MHN-625-NC	PXV-F141-EX
10234-00910	LBB120FP02220NRC02620NNN	8-8 MHN-6MO	PXV-F145
10234-00910	LBB120FP02325NLC00550NNN	8-8 MHN-6MO-NC	PXV-F145
10234-01000	LBB120FP03200NLC00000NVN	8-8 MHN-825	PXV-F151
10234-01000	LBB120SP00150FLC00000NNN	8-8 MHN-B	PXV-F151
10234-01200	LBB120SP00560NLP01200CNN	8-8 MHN-D1	PXV-F151-EX
10234-01200	LBB120SP00850NRQ00000NNN	8-8 MHN-HC	PXV-F151-EX
10234-01270	LBB120SP01335NRC02630NNN	8-8 MHNK-SS	PXV-F155
10234-01270	LBB120SP01400NLB00000NNN	8-8 MHN-M	PXV-F155
10234-01400	LBB120SP01400NLQ00000NNN	8-8 MHN-SS	PXV-F161
10234-01400	LBB120SP01400NRB00000NNN	8-8 MHN-SSHP	PXV-F161
10234-01600	LBB120SP01500NRR00000CNN	8-8 MHN-SS-OXY	PXV-F161-EX
10234-01600	LBB120SP01800NLB00000NNN	8-8 MHN-TI	PXV-F161-EX
10234-01620	LBB120SP01800NRB00000NNN	8-8 P2HF-SS	PXV-M131
10234-01620	LBB120SP02000NLB00000NNN	8-8 P2T2-SS	PXV-M131
10234-01700	LBB120SP02000NRB00000NNN	8-8 RA-6MO	PXV-M1354
10234-01700	LBB120SP02250NLQ00000CNN	8-8 RA-825	PXV-M1354
10234-01800	LBB120SP02700NLB00000NNN	8-8 RA-B	PXV-M141
10234-01800	LBB120SP02700NRB00000NNN	8-8 RA-HC	PXV-M141
10234-01920	LBB120SP03200NLB00000NNN	8-8 RA-M	PXV-M151
10234-01920	LBB120SP03200NRB00000NNN	8-8 RA-SS	PXV-M151
10234-02200	LBB120SP03485NRB00000NVN	8-8 RA-SSHP	PY00031
10234-02200	LBB120SP04630NLB00000NNN	8-8 RRA-825	PY00031
10234-02500	LBB120SP05660NLB00000NNN	8-8 SE-SS	PZ025HM001
10234-02500	LBB120SP08360NLB00000NNN	8-8 SE-SSHP	PZ032HM001
10234-03875	LBB120SP08550NLC00000NNN	8-8 SVE-SS	PZ040HM001
10234-03875	LBB180EP03900NRC00000NVN	8-8 T2H2BZ-SS	PZ050HM001
102368-450W	LBB180SP02440NLC00000NNN	8-8 T2HF-B	PZ050HM005
10239-03	LBN080EP00800NNN00000NNN	8-8 T2HF-SS	PZ063HM001
1023FIL	LBN080EP01920NNN00000NNN	8-8 T2HG-B	PZ063HM002
1023FIL	LBN080EP02900NNN00000CNN	8-8 T2HG-SS	PZ080HM001
1024-525	LBN080EP03000NNN00000NNN	8-8 TRBZ-SS	PZ080HM005
1024FIL	LBN080EP04600NNN00000NNN	8-8 VTX-B	PZ100HM001
1024FIL	LBN080SP00400NNN00000NNN	8-8 VTX-S	PZ100HM002
1025 7310	LBN080SP00616NNN00000CNN	8-8 VTX-SS	PZ100HM005

1025 7321	LBN080SP00686NNN00000NNN	8-8 WBMP7-SS	PZ125HM001
1025/0281003	LBN080SP00846NNN00000CNN	8-8 WBZ-B	PZ125HM005
1025/0281013	LBN080SP00900NNN00000NNN	8-8 WBZ-SS	PZ160HM001
1025/0281014	LBN080SP00916NNN00000NNN	8-8 WFTX-S	PZ-2.1FIL
1025/0281026	LBN080SP02200NNN00000NNN	8-8 WFTX-WLN-S	PZ-2.1FIL
1025/0281031	LBN120EP00620NNN00000NNN	8-8 X6HBZ6-SS	PZ200HM001
1025/0281038	LBR320-316CFX	8-8 XH2BZ-SS	PZ200HM005
1025/0281041	LBR324-316CFX	8-8 XHBZ-SS	PZ-3.1FIL
1025/0281042	LBR324-320CFX	8-8 ZEBW-SS	PZ-3.1FIL
1025/0281200	LBR332-316CFX	8-8 ZELW-SS	PZ-3.1FIL-DB
1025/028ECCENKI	LBR332-320CFX	8-8 ZH3LA-SS	PZ-3.1FIL-DB
1025/028POLYV	LBR332-324CFX	8-8 ZHBA5-SS	PZC-A966
1025/028T003	LBR624-616SSX	8-8 ZHBA-SS	PZC-A966
1025/13449	LBR624-620CFX	8-8 ZHBS-SS-C	PZC-B2268
1025/ELECKIT220	LBR624-620SSX	8-8 ZHBW-SS	PZC-B2268
1025/ELECKIT380	LBR632-616SSX	8-8 ZHLS-SS	PZC-B2289
1025/HYDPUMPKIT	LBR632-620SSX	8-8 ZHLW-SS	PZC-B2289
1025/LE1D094F7	LBR632-624CFX	8-8 ZPC-SS	PZC-BG3
1025/PRESREGKIT	LBR632-624SSX	8801-023-00N	PZC-BG3
1025/PRESSWIKIT	LBSPSB10	8801-023-Q1N	PZC-BG8
1025/S3H110V	LBSPSB10	8801-023-U1B	PZC-BG8
102-508897	LBSPUB10	88-06H643-75	PZC-BG9
1025-220VMONO50	LBSPUB10	88-06H643-75	PZC-BG9
1025-220VMONO50G	LC100-2727	8807-11	PZC-S1006
1025-380V-G	LC125-3636	8807-11	PZC-S1006
1025-380VTRI50	LC32-1010	88-07H644-75	PZC-S1008
10255-4-4	LC50-1616	88-07H644-75	PZC-S1008
1025L04 01 25	LC80-2020	880XBAKP-M6XS	PZD00A-400
1025L06 01	LCB040KL	880XBAKP-M6XY	PZD00A-401
1025L08 01	LCB040KLV	880XBAKP-Y4XS	PZM-L199
1025L08 01 05	LCB040KN	880XBAKP-Y6XS	PZM-L199
1025L10 01 06	LCB040KU	880XDAKP-A4XS	PZP-G130
1025P03 00 18	LCB040LG00400SRN	880XDAKP-H6XS	PZP-G130
1025P03 01 18	LCB040LG00500SRN	880XDAKP-Y6XS	PZP-G70
1025P03 04 18	LCB040LG00700SRN	880XGAHX-M3XS	PZP-G70
1025P04 00	LCB040LG00800SLN	880XGAKP-A6XV	PZP-VN253
1025P04 00 27	LCB040LG00800SRN	880XGAKP-M4XV	PZP-VN253
1025P04 01	LCB040LG00900SRN	880XGAKP-M6XS	PZP-VN253SE
1025P04 01 27	LCB040LG01000SRN	880XGAKP-M6XY	PZP-VN253SE
1025P04 02	LCB040LG01500SLN	880XJAKP-M6XS	PZP-VN36
1025P04 02 27	LCB040MG00400SLN	880XMAHX-A3XV	PZP-VN36
1025P04 03	LCB040MG00400SRN	8810C	PZP-VN50
1025P04 03 27	LCB040MG00500BLN	881-12	PZP-VN50
1025P04 04	LCB040MG00500SLN	881-16	PZP-VN63
1025P04 04 27	LCB040MG00700BRN	8811FIL	PZP-VN63
1025P04 05	LCB040MG00700SRN	8811FIL	PZP-VS05SEQ9
1025P04 05 27	LCB040MG02000SRN	8-8-12 WJLO-S	PZP-VS05SEQ9
1025P04 06	LCB040SG00500BLN	881-20	PZP-VS073SE
1025P04 06 27	LCB040SG00500SLN	881-24	PZP-VS073SE
1025P04C00	LCB040SG00600SLN	8812FIL	PZP-VS12
1025P04C00 27	LCB040SG00600SRN	8812FIL	PZP-VS12
1025P04C01	LCB040SG00700SRN	88-12H643-75	PZP-VS18
1025P04C01 27	LCB040SG01000SLN	88-12H643-75	PZP-VS18

1025P04C04	LCB040SG01250SRN	881-32	PZP-VS253
1025P04C04 27	LCB040W0150	8813FIL	PZP-VS253
1025P04R00	LCB040W0250	8813FIL	PZP-VS25SE
1025P04R01	LCB040W0300	881-40	PZP-VS25SE
1025P04R02	LCB040W0600	8814FIL	PZP-VS36
1025P04R03	LCB060KM	8814FIL	PZP-VS36
1025P04R04	LCB060KW	8816FIL	PZT-X05
1025P04V01	LCB060LG00250SLN	8816FIL	PZT-X05
1025P05 00 33	LCB060LG00250SRN	8821-02000	PZT-X20
1025P05 01 33	LCB060LG00400SRN	8821-02000	PZT-X20
1025P05 04 33	LCB060LG00500SLN	8821-02200	PZU-A11
1025P06 00	LCB060LG00500SRN	8821-02200	PZU-A11
1025P06 01	LCB060LG00600SLN	8822-00750	PZU-A12
1025P06 02	LCB060LG00600SRN	8822-00750	PZU-A12
1025P06 03	LCB060LG00700SLN	8822-01200	PZU-A15
1025P06 04	LCB060LG00700SRN	8822-01200	PZU-A15
1025P06 05	LCB060LG01250SLN	8822-01460	PZU-B12
1025P06 06	LCB060LG01250SRN	8822-01460	PZU-B12
1025P06C00	LCB060LG01750BRN	8822-05000	PZUC12
1025P06C01	LCB060LG04000SLN	8822-05000	PZUC12
1025P06C04	LCB060LG04500SLN	8823-00500	PZU-C12
1025P06R00	LCB060MG00300SLN	8823-00500	PZU-C12
1025P06R02	LCB060MG00400SRN	8823-00700	PZUE12
1025P06R03	LCB060MG00450SLN	8823-00700	PZUE12
1025P06R04	LCB060MG00600SLN	8823-00750	PZU-E12
1025P06V01	LCB060MG01250SRN	8823-00750	PZU-E12
1025P06V02	LCB060MG01500SRN	8823-01200	PZU-E15
1025P06V03	LCB060MG01750SRN	8823-01200	PZU-E15
1025P06V04	LCB060MG02750SRN	8823-01460	Q09-C2-EC00
1025P08 00	LCB060MG03500SRN	8823-01460	Q09-C2-EC00
1025P08 00 55	LCB060SG00800SRN	8823-02400	Q15-95-026
1025P08 01	LCB060SG01000BLN	8823-02400	Q15-95-026
1025P08 02	LCB060W0500	8824-01050	Q18-96-001
1025P08 03	LCM20.2021	8824-01050	Q18-96-001
1025P08 04	LCM20.2061	8824FIL	Q19-C4-EC00
1025P08 05	LCM20.2062	8824FIL	Q19-C4-EC00
1025P08 06	LCM202022	88-25H644-75	Q4 HANDLE POSITIONER
1025P08C00	LCM202022TRD	88-25H644-75	QFL1600
1025P08C01	LCM202026	8831FIL	QFL1600
1025P08C04	LCM202028	8831FIL	QH1510
1025P08R00	LCM2PP02N	8832FIL	QH1610
1025P08R02	LCM2PP02V	8832FIL	QH1810
1025P08R03	LCM3PP02V	8833-023-000	QH1913
1025P08R04	LCM3PPX02V	8833FIL	QH2013
1025P08V01	LD10/10K	8833FIL	QH2213
1025P08V02	LD10S	88-33H643-75	QH2313
1025P08V03	LD10SDPR71	88-33H643-75	QH2919
1025P08V04	LD10SHANDRADSTAHL	88-36H644-75	QHPA13-D6X2-C
1025P10 00	LD10SX	88-36H644-75	QHPA13-D6X3-C
1025P10 00 75	LD12S	8-8-4 JLZ-6MO	QHPA13-D7X3-C
1025P10 01	LD12SDRLUFT35B	8-8-4 JLZ-IIY	QHPA13-D7X4-C
1025P10 01 75	LD12SM+PSR=STAHL	8-8-4 JLZ-NNR	QHPA13-DC
1025P10 02	LD12SX	8-8-4 JLZ-SS	QHPA13-F4B3-C

1025P10 03	LD13/13K	8-8-4 OBZ-SS	QHPA13-G4X3-C
1025P10 04	LD13/13KN	88-40H644-75	QHPA14-D6X4-C
1025P10 04 75	LD14S	88-40H644-75	QHPA14-D6X5-C
1025P10 05	LD14SX	88-44H643	QHPA14-D7X6-C
1025P10 06	LD16S	88-44H643	QHPA14-DC
1025P10C00	LD16SX	88-45H643-75	QHPA14-E6X4-C
1025P10C01	LD17/17K	88-45H643-75	QHPA14-E6X5-C
1025P10C04	LD17/17KN	88-45H644-75	QHPA14-F4B4-C
1025P10R00	LD20S	88-45H644-75	QHPA14-G4X4-C
1025P10R03	LD20SX	88-49H644-75	QHPA16-D6X6-C
1025P10R04	LD21/21K	88-49H644-75	QHPA16-D6X7-C
1025P10V01	LD21/21KN	8-8-4JMTXS	QHPA16-D7X7-C
1025P10V02	LD25S	88-52H643-75	QHPA16-D7X8-C
1025P10V03	LD25SX	88-52H643-75	QHPA16-DC
1025P10V04	LD26/26K	8-8-6 JBZ-SS	QHPA16-E6X6-C
1025P12 00	LD26/26KN	8-8-6 JLZ-M	QHPA16-E7X8-C
1025P12 00 09	LD30S	8-8-6 JLZ-SS	QHPA16-G4X6-C
1025P12 01	LD30SX	8-8-6 OBZ-SS	QHPA16-G4X8-C
1025P12 01 09	LD33/33K	8-8-6 SBZ-SS	QHPA18-D7X9-C
1025P12 03	LD38S	8-8-6 WJLO-S	QHPA18-DC
1025P12 03 09	LD38SX	8861FIL	QHPA53-D6X3-C
1025P12 04	LD630EGR6000	8861FIL	QHPA53-D7X3-C
1025P12 04 09	LD640EGR2300	88-63H643-75	QHPA53-D7X4-C
1025P12C00	LD640EGR6000	88-63H643-75	QHPA53-DP
1025P12C00 09	LD640EGR6000-Z=X2	8865FIL	QHPA53-E6X2-C
1025P12C01	LD825EFR6000-Z=X1	8865FIL	QHPA53-E6X3-C
1025P12C01 09	LD840EER6000	8866FIL	QHPA53-F4B3-C
1025P12C04	LD840EER6000-Z=X1	8866FIL	QHPA53-G4X3-C
1025P12C04 09	LD-B2L	88-67H644-75	QHPA54-D6X4-C
1025P12R00	LD-B6L	88-67H644-75	QHPA54-D6X5-C
1025P12R01	LD-B6X	8-8-6JMTXS	QHPA54-D7X6-C
1025P12R04	LD-B8L	88-71H643-75	QHPA54-DP
1025P12V01	LD-B8X	88-71H643-75	QHPA54-E6X4-C
1025P12V02	LD-HB4X-SS	8872FIL	QHPA54-E6X5-C
1025P12V04	LD-MB4L	8872FIL	QHPA54-F4B4-C
1025P14 00	LD-MB4X	88-76H644-75	QHPA54-G4X4-C
1025P14 00 11	LD-MB6L	88-76H644-75	QHPA56-D6X6-C
1025P14 01	LD-MB6X	8879FIL	QHPA56-D6X7-C
1025P14 01 11	LD-PR6	8879FIL	QHPA56-D7X7-C
1025P14 04	LDV10S	8-8-8 FT-6MO-NC	QHPA56-D7X8-C
1025P14 04 11	LDV10SDKM+PSR=STAHL	8-8-8 FT-B	QHPA56-DP
1025P14C00	LDV12SR1/2	8-8-8 FT-HC	QHPA56-E6X6-C
1025P14C00 11	LDV14S	8-8-8 FT-M	QHPA56-E7X7-C
1025P14C01	LDV14SDKM+PSR=STAHL	8-8-8 FT-SS	QHPA56-E7X8-C
1025P14C01 11	LDV14SMDPR71	8-8-8 FT-SSHP	QHPA56-G4X6-C
1025P14C04	LDV14SSTL1	8-8-8 FT-SS-NC	QHPA56-G4X8-C
1025P14C04 11	LDV16SR3/4	8-8-8 JBMP7-SS	QHPA58-D7X9-C
1025P16 00 13	LDV20S	8-8-8 JBZ-B	QHPA58-DP
1025P16 01 13	LDV20SDKM+PSR=STAHL	8-8-8 JBZ-SS	QHPA58-E7X9-C
1025P16 02 13	LDV20SMDPR71	8-8-8 MBT-SS	QNA12010-31
1025P16 03 13	LDV20SSTL1	8-8-8 MBZ-SS	QNA12012-316
1025P16 04 13	LDV25S	8-8-8 MT-SS	QNA1208-316
1025RENTFEE	LDV30S	8-8-8 MT-SSHP	QNA6604-316

1025T04 00 25	LDV38S	8-8-8 OBZ-SS	QNA99010-316
1025T06 00	LDZ10S	8-8-8 RBU-S	QNA99012-316
1025T08 00	LDZ14S	8-8-8 RBZ-SS	QNA9906-316
1025T10 00	LDZ20S	8-8-8 RTX-S	QNA9908-316
1025T12 00	LDZ25S	8-8-8 RTX-SS	QSB12
1025U03 01 18	LDZ30S	8-8-8 SBZ-SS	QSB4400
1025U03 04 18	LDZ38S	8-8-8 ST-B	QSB6600
1025U04 01	LE04LLMCF	8-8-8 ST-SS	QSB9900
1025U04 02	LE04LLRCF	8-8-8 STX-S	QSG120
1025U04 03	LE04LLRCFX	8-8-8 STX-SS	QSG40
1025U04 04	LE06LLMCF	8881FIL	QSG60
1025U04 05	LE06LLRCF	8881FIL	QSG90
1025U04 06	LE06LLRCFX	8882FIL	QSL12
1025U04A01	LE06LMCF	8882FIL	QSL4400
1025U04K01	LE06LMCFX	88-82H643-75	QSL6600
1025U04K02	LE06LR71	88-82H643-75	QSL9900
1025U04K03	LE06LRCF	88-84H643-75	QSO12
1025U04K04	LE06LRCFX	88-84H643-75	QSO4400
1025U04R01	LE06LRMS	8-8-8R4OMLOS	QSO6600
1025U04R04	LE06SR71	8-8-8S4OMLOS	QSO9900
1025U04R08	LE06SRCF	8-8-8S4OMXS	QSP120
1025U04R12	LE06SRCFX	8-8C3MXS	QSP160
1025U04R13	LE08LLMCF	8-8C3MXSS	QSP40
1025U04R14	LE08LLR71	8-8C4OMLOS	QSP60
1025U04R17	LE08LLRCF	8-8C4OMLOSEPDM	QSP90
1025U05 01	LE08LLRCFX	8-8C4OMLOSS	QSS120
1025U05 04	LE08LR71X	8-8C4OMXS	QSS40
1025U05R08	LE08LRCF	8-8C4OMXSBP	QSS60
1025U06 01	LE08LRCFX	8-8C4OMXSBPNB	QSS90
1025U06 02	LE08LRMS	8-8C4OMXSS	QST12
1025U06 03	LE08SMCF	8-8C4OMXSV	QST4440
1025U06 04	LE08SRCF	8-8CMTXS	QST6660
1025U06 05	LE10/06	8-8CMTXSS	QST9990
1025U06 06	LE10/06N	8-8F3MK4S	QSX12
1025U06K01	LE10/08	8-8F3MK4SS	QSX4444
1025U06K02	LE10/08N	8-8F3MXS	QSX6666
1025U06K03	LE10/10	8-8F3MXSS	QSX9999
1025U06K04	LE10LMCFX	8-8F42EDMLOS	QTE12-90
1025U06R01	LE10LR71	8-8F42EDMLOSBPNB	QTE44-90
1025U06R04	LE10LRCF	8-8F42EDMLOSS	QTE66-90
1025U06R08	LE10LRCFX	8-8F42EDMLOSSV	QTE99-90
1025U06R12	LE10SRCF	8-8F42EDMLOSSVCAP	QTS1206.375
1025U06R13	LE10SRCFX	8-8F42EDMLOSV	QTS4403.2
1025U06R14	LE12LMCFX	8-8F42EDMLS	QTS6603.50
1025U06R17	LE12LR71	8-8F42EDMXS	QTS9905.25
1025U06V01	LE12LRCF	8-8F42EDMXSBP	QXWL13
1025U06V03	LE12LRCFX	8-8F42EDMXSS	QXWL3
1025U06V04	LE12LRMS	8-8F42EDMXSSV	R.380004
1025U08 01	LE12SRCF	8-8F4OMXS	R.380007
1025U08 02	LE12SRCFX	8-8F4OMXSBP	R.6111 X 4
1025U08 03	LE13/06	8-8F4OMXSS	R.6112 X 4
1025U08 04	LE13/06N	8-8F642EDMLS	R.6121 X 4
1025U08 05	LE13/08	8-8F642EDMLSS	R.6122 X 4

1025U08 06	LE13/10	8-8F642EDMXS	R.6125
1025U08K01	LE15LMCF	8-8F642EDMXSS	R.6131 X 4
1025U08K02	LE15LR71	8-8F64OMXS	R.6132 X 4
1025U08K03	LE15LR71X	8-8F6MK4S	R.6135
1025U08K04	LE15LRCF	8-8F6MK4SS	R.63012
1025U08R01	LE15LRCFX	8-8F6MXS	R.63013
1025U08R04	LE16SRCF	8-8F6MXSS	R.63014
1025U08R08	LE18LR71	8-8FHC-825	R.63112
1025U08R12	LE18LRCF	8-8FMK4S	R.63113
1025U08R13	LE18LRCFX	8-8FMK4SS	R.63114
1025U08R14	LE20SRCF	8-8FMTXB	R.63122
1025U08R17	LE20SRCFX	8-8FMTXS	R.63123
1025U08V01	LE22LRCF	8-8FMTXSS	R.63124
1025U08V04	LE22LRCFX	8-8G4MK4S	R.63212
1025U10 01	LE22LRDPR71MS	8-8G4MLOSMO	R.63213
1025U10 02	LE25SRCF	8-8G4MLOSSMO	R.63214
1025U10 03	LE2-6006-18	8-8G4MXS	R.63222
1025U10 04	LE2-6006-18	8-8G4MXSBP	R.63223
1025U10 05	LE28LR71	8-8G4MXSMO	R.63224
1025U10 06	LE28LR71X	8-8G4MXSS	R.688120.AH
1025U10K01	LE28LRCF	8-8G4MXSSMO	R.76115
1025U10K02	LE28LRCFX	8-8GC GBZ-SS	R.76124
1025U10K03	LE30SRCF	8-8GC T2HG-SS	R.76125
1025U10K04	LE35LRCF	8-8GMTXS	R.798005
1025U10R01	LE38SRCFX	8-8GMTXSS	R.799021
1025U10R04	LE42LRCF	88-HEY1442A	R.810003
1025U10R08	LEAF/3800-BG/DE	88-HEY1442A	R.813601
1025U10R14	LEB100EP00150NLB00000NVN	88IT6503E3	R03-01-000
1025U10V01	LEB100EP00400NRB00400NNN	88IT6503E5	R03-01-000
1025U10V04	LEB100EP00450NRB00500CNN	88IT6503J3	R03-01-L00
1025U12 01	LEB100EP00500NLB00000NNN	88IT6503J5	R03-01-L00
1025U12 02	LEB100EP00500NRB00000NNN	8-8K CBZ-SS	R03-01-LM0
1025U12 03	LEB100EP00550NLR00000NNN	8-8K FBZ-SS	R03-01-LM0
1025U12 04	LEB100EP00700NLB00000NNN	8-8K GBZ-SS	R03-01-M00
1025U12 05	LEB100EP00750NLB00000NNN	8-8K MHN-B	R03-01-M00
1025U12 06	LEB100EP00750NRB00000NNN	8-8K MHN-SS	R03-02-000
1025U12K01	LEB100EP00850NRB00400NNN	8-8K RA-M	R03-02-000
1025U12K02	LEB100EP01000NLB00400NNN	8-8K RA-SS	R03-02-GLM
1025U12K03	LEB100EP01000NRB00400NNN	8-8K T2HF-SS	R03-02-GLM
1025U12K04	LEB100EP01000NRR00400CNN	88KAAW21MVX	R03-02-GMQ
1025U12R01	LEB100EP01175NLQ00000NNN	88KAIW21MVX	R03-02-GMQ
1025U12R04	LEB100EP01300NRQ00000NNN	88KATF13MVX	R03-02-LM0
1025U12R08	LEB100EP01362NRR00000CNN	88KATF19MVX	R03-02-LM0
1025U12R14	LEB100EP01450RLQ00000NNN	88KFIW21MVX	R03-02-M00
1025U12V01	LEB100EP01450SRN00000NNN	88KFTF13MVX	R03-02-M00
1025U14 01 95	LEB100EP01600NLQ00000NNN	88KFTF19MVX	R03-02-MN0
1025U14 02 95	LEB100EP01600NRQ00000NNN	88KFTR19MVX	R03-02-MN0
1025U14 04 95	LEB100EP01625NLB00200NVN	8-8R CBZ-SS	R03-02-MP0
1025U14K03 95	LEB100EP01850NRQ00000NNN	8-8R FBZ-SS	R03-02-MP0
1025U14R01 95	LEB100EP01860SLN00000NNN	8-8R MHN-6MO	R03-02-MQ0
1025U14R04 95	LEB100EP01925NLB00200NVN	8-8R MHN-B	R03-02-MQ0
1025U14R08 95	LEB100EP02050NLB01200NNN	8-8R MHN-SS	R03-C1-GLM
1025U16 01 11	LEB100EP02052NLB00000NNN	8-8R RA-B	R03-C1-GLM

1025U16 03 11	LEB100EP02410NLB00000CNN	8-8R RA-SS	R03-C1-GM0
1025U16 04 11	LEB100EP02460NRR00000NNN	8-8R T2HG-SS	R03-C1-GM0
1025U16R08 11	LEB100EP02460SLN00000NNN	88RAM15KIT	R03-C1-LM0
1025V08 00 04	LEB100EP02552NLB00000NNN	88SFAK13MXX	R03-C1-LM0
1025V11 00 06	LEB100EP02655NLR00000CNN	88SFAK17MXX	R03-C1-M00
1025V13 00 07	LEB100EP02800NLB00650NNN	88SFAK21MXX	R03-C1-M00
1025V14 00 08	LEB100EP02910NLB00000CNN	88SFAK26MXX	R03-C1-MQ0
1025V14C04 09	LEB100EP02910NRB00000CNN	88SFAW17MXX	R03-C1-MQ0
1025V16 00 10	LEB100EP02944NLB00000NNN	88SFAW21MXX	R03-C1-MT0
1025V18 00 12	LEB100EP03100NLR00000NNN	88SFIW17MXX	R03-C1-MT0
1025V23 00 15	LEB100EP03120SRN00000NNN	88SFIW21MXX	R03-C1-MU0
1025V26 00 19	LEB100EP03160NRR00000NNN	88SFIW21SXN	R03-C1-MU0
1025Y53 00	LEB100EP03160SLN00000NNN	88SFTF19MXX	R03-C1-P00
1025Y56 00	LEB100EP03650NLM00790CNN	8-8V3MXS	R03-C1-P00
1025Y60 00	LEB100EP03650NLM00970CNN	8-8V4OMLOS	R03-C1-Q00
1025Y62 00	LEB100EP07000NLB00000NNN	8-8V4OMXS	R03-C1-Q00
10262FIL	LEB100EP07500NLB00000NNN	8-8V4OMXSBP	R03-C2-000
10262FIL	LEB100FP01600NRR00310NNN	890-009034-001	R03-C2-000
10264FIL	LEB100SP00295SBN01210NVN	890-130010	R03-C2-KM0-050
10264FIL	LEB100SP00315SBN00980NVN	8902-E1-00	R03-C2-KM0-050
10265FIL	LEB100SP00350NLR00000NNN	8902-EQ-00	R03-C2-KM0-058
10265FIL	LEB100SP00350NRR01200NNN	8902-LS-00	R03-C2-KM0-058
10265FIL	LEB100SP00450NLB00800NNN	8902-M1-00	R03-C2-LM0
10265FIL	LEB100SP00450NRB00000NNN	8902-RE-00	R03-C2-LM0
10266FIL	LEB100SP00450NRB00800NNN	8902-RR-00	R03-C2-LMN
10266FIL	LEB100SP00500NLM00310CNN	8903-AI-00	R03-C2-LMN
10267FIL	LEB100SP00500NLM00335CNN	8903-CB-00	R03-C2-M00
10267FIL	LEB100SP00500NLM00340CNN	8903-CN-00	R03-C2-M00
10268FIL	LEB100SP00500NLR00000NNN	8903-CT-00	R03-C2-MP0
10268FIL	LEB100SP00500SBN01300NVN	8903-DN-00	R03-C2-MP0
10269FIL	LEB100SP00505SBN00980NVN	8903-EP-00	R03-C2-MQ0
10269FIL	LEB100SP00550NLB00800NNN	8903-FA-00	R03-C2-MQ0
1026FIL	LEB100SP00550NRB00800NNN	8903-IM-00	R03-C2-MS0
1026FIL	LEB100SP00580SBN01030NVN	8903-IP-00	R03-C2-MS0
10270FIL	LEB100SP00600NLR00000NNN	8903-M1-00	R03-C2-Q00
10270FIL	LEB100SP00600NRR00000NNN	8903-PB-00	R03-C2-Q00
10271FIL	LEB100SP00600SBN01300NVN	8903-PN-00	R04A4-10.0N
10271FIL	LEB100SP00650NRB00000NNN	8903-RS-00	R04A4-15.0N
10272FIL	LEB100SP00800NRR00000NNN	8903-SP-00	R04A4-5.0N
10272FIL	LEB100SP00885SBN01210NVN	8904-A-UK-00-03	R04B4-10.0N
10273FIL	LEB100SP00912RLM00000CVN	8904-A-US-00-03	R04B4-5.0N
10273FIL	LEB100SP01000NLB00000NNN	8904-H-UK-00-03	R04D3-5.0N
102740-ADAPTOR	LEB100SP01050NLB00800NNN	8905/FWCBL1000/00	R04E3-10.0N
10274FIL	LEB100SP01050NRB00800NNN	8905/FWCBL200/00	R04E3-5.0N
10274FIL	LEB100SP01100NLQ00000NNN	8905/FWCBL280/00	R04ES07KN
10276FIL	LEB100SP01100NRQ00000NNN	8905/FWCBL4500/00	R04ES07KV
10276FIL	LEB100SP01312LRM01320CVN	8906/DSEDEV/00	R04ES17KN
102770-001-S	LEB100SP01500NLQ00000NNN	8906/DSERUN/00	R04ES17KV
102772-001-S	LEB100SP01700NLR00000CNN	890CA-532500B0-R00-U	R04ES25KN
10277FIL	LEB100SP01700NLR00000NNN	890CA-532800B0-000-U	R04ES25KV
10277FIL	LEB100SP01700NRR00000NNN	890CD-231300B0-000-1B000	R04ES35KN
10281FIL	LEB100SP01750NLR00000NNN	890CD-231700B0-000-1A30X	R04ES35KV
10281FIL	LEB100SP01800SLN00000NNN	890CD-231700B0-000-1A3SX	R04ES35SNP

10-2829S	LEB100SP01840NLQ00000NNN	890CD-231700B0-000-1B000	R04ES35SVP
10282FIL	LEB100SP01840NRQ00000NNN	890CD-232165B0-000-1A000	R04ES42SN
10282FIL	LEB100SP01950NLR00000NNN	890CD-232165B0-000-1A3SX	R04ES42SV
10283FIL	LEB100SP02075NLR00000NNN	890CD-232165B0-000-1B000	R04H3-15.0N
10283FIL	LEB100SP02150NLQ00000NNN	890CD-432730E0-000-1A000	R04X0.5
10286FIL	LEB100SP02150NRQ00000NNN	890CD-432730E0-000-1B000	R04X0.5CF
10286FIL	LEB100SP02380NLR00000CNN	890CD-432870E0-000-1A000	R04X0.75CF
10287FIL	LEB100SP02380NRQ00000NNN	890CD-432870E0-000-1A3F0	R04X1
10287FIL	LEB100SP02400NLR00000CNN	890CD-432870E0-000-1A3P0	R04X1-316BA
10289FIL	LEB100SP02442NLQ00000NNN	890CD-432870E0-000-1B000	R04X171
10289FIL	LEB100SP02500NLR00000CNN	890CD-433105F1-000-1A000	R04X1CF
102-908000	LEB100SP02605NLR00000CNN	890CD-433105F1-000-1B000	R05X1CF
102-908021	LEB100SP02640NRR02100CNN	890CD-433145F1-000-1B000	R05X51
10291FIL	LEB100SP02800NLR00000NNN	890CD-433145F2-000-1A000	R05X51
10291FIL	LEB100SP02850NLQ00000NNN	890CD-433156F1-000-1A000	R05X51A
10292FIL	LEB100SP03162NRB02870NNN	890CD-433156F1-000-1B000	R05X51A
10292FIL	LEB100SP03162NRR02870NNN	890CD-433156F1-000-2B000	R05X51-SS
10293-02100	LEB100SP03200NLQ00000NVN	890CD-433180F1-000-1B000	R05X51-SS
10293-02100	LEB100SP04000NRB00000NNN	890CD-433180F1-007-1A000	R06E3-10.0N
10294-00150	LEB100SP04060NLB00880CNN	890CD-433180F2-000-1A000	R06F3-5.5N
10294-00150	LEB100SP04100NLR00000CNN	890CD-433180F2-007-1A3P0	R06G3-1.0N
10294-00350	LEB100SP04300NLB00000CNN	890CD-433180F2-007-1A3PA	R06G3-5.5N
10294-00350	LEB100SP04360NLB00000CNN	890CD-531200B0-000-1A000	R06M10S4N
10294-00410	LEB100SP06210SLN00000CNN	890CD-531200B0-000-1A0PA	R06M25S4N
10294-00410	LEB100TP01153SLN00000NNN	890CD-531200B0-000-1A10A	R06M35L4NXG101
10294-00500	LEB100TP01153SRN00000NNN	890CD-531200B0-000-1A1P0	R06M35S4N
10294-00500	LEB150EP00820NLR00000CNN	890CD-531200B0-000-1A300	R06X0.75CF
10294-00540	LEB150EP01520NLC00000NNN	890CD-531200B0-000-1A30A	R06X1
10294-00540	LEB150EP02000NRR00000NNN	890CD-531200B0-000-1A3N0	R06X1.5
10294-00590	LEB150EP02110NLR00000CNN	890CD-531200B0-000-1A500	R06X1.571
10294-00590	LEB150EP02150NLR00000NNN	890CD-531200B0-000-1A5F0	R06X1.5CF
10294-00600	LEB150EP02200NLR00000NNN	890CD-531200B0-000-1A5P0	R06X171
10294-00600	LEB150EP02400NLR00000NNN	890CD-531200B0-000-1A5PA	R06X1CF
10294-00680	LEB150EP02500NLR00000NNN	890CD-531200B0-000-1A5PE	R06X2.25
10294-00680	LEB150EP02600NLR00000NNN	890CD-531200B0-000-1B000	R06X2.25CF
10294-00700	LEB150EP02670NRR00000NNN	890CD-531200B0-000-2A50A	R06X2CF
10294-00700	LEB150EP02700NRB00000NNN	890CD-531200B0-000-2B000	R08-01-C000
10294-00800	LEB150EP03500NRR00000NNN	890CD-531350B0-000-1A000	R08-01-C000
10294-00800	LEB150EP03770NLR00000NNN	890CD-531350B0-000-1A00A	R08-01-D000
10294-00900	LEB150FP00550NLR00000NNN	890CD-531350B0-000-1A0P0	R08-01-D000
10294-00900	LEB150SP01200NLR00000NNN	890CD-531350B0-000-1A300	R08-02-F0G0
10294-00925	LEB150SP01800NLR00000NNN	890CD-531350B0-000-1A30A	R08-02-F0G0
10294-00925	LEB150SP01800NRR00000NNN	890CD-531350B0-000-1A3P0	R08-02-L000
10294-00950	LEB150SP02030SLN00000CNN	890CD-531350B0-000-1A50A	R08-02-L000
10294-00950	LEB150SP02030SRN00000CNN	890CD-531350B0-000-1A5P0	R08-C1-C0G0
10294-01035	LEB150SP02400NRR00000NNN	890CD-531350B0-000-1A70A	R08-C1-C0G0
10294-01035	LEB150SP02600NRR00000NNN	890CD-531350B0-000-1B000	R08-C1-D0G0
10294-01200	LEB150SP02710NRR00000NNN	890CD-531450B0-000-1A000	R08-C1-D0G0
10294-01200	LEB150SP03250NLB00000NNN	890CD-531450B0-000-1A300	R08-C1-F000
10294-01282	LEB150SP03250NRB00000NNN	890CD-531450B0-000-1A30A	R08-C1-F000
10294-01282	LEB150SP05570NLB00000CNN	890CD-531450B0-000-1A3N0	R08-C1-F0G0
10294-01350	LEB150SP08500NLB00000NNN	890CD-531450B0-000-1A3P0	R08-C1-F0G0
10294-01350	LEB150SP08770NRB00000CNN	890CD-531450B0-000-1A3SX	R08-C2-C000

10294-01500	LEB150TP01200NLC00000NNN	890CD-531450B0-000-1A500	R08-C2-C000
10294-01500	LEE06L7/16UNFOMDCF	890CD-531450B0-000-1A50A	R08-C2-D000
10294-01700	LEE06LMOMDCF	890CD-531450B0-000-1A5P0	R08-C2-D000
10294-01700	LEE06LRCF	890CD-531450B0-000-1B000	R08-C2-D0G0
10294-01774	LEE06LROMDCF	890CD-531450B0-000-2A000	R08-C2-D0G0
10294-01774	LEE06LRVITOMDCF	890CD-531450B0-000-2A3S0	R08-C2-D0P0
10294-01850	LEE06SROMDCF	890CD-531450B0-000-2B000	R08-C2-D0P0
10294-01850	LEE06ZLRCF	890CD-531600B0-000-1A000	R08-C2-F000
10294-01900	LEE08LMOMDCF	890CD-531600B0-000-1A0F0	R08-C2-F000
10294-01900	LEE08LRCF	890CD-531600B0-000-1A300	R08-C2-F0G0
10294-01910	LEE08LROMDCF	890CD-531600B0-000-1A30A	R08-C2-F0G0
10294-01910	LEE08SRCF	890CD-531600B0-000-1A3E0	R08-C2-F0GP
10294-01950	LEE08SROMDCF	890CD-531600B0-000-1A3F0	R08-C2-F0GP
10294-01950	LEE08ZLRCF	890CD-531600B0-000-1A3N0	R08-C2-F0GR
10294-02000	LEE08ZSRCF	890CD-531600B0-000-1A3P0	R08-C2-F0GR
10294-02000	LEE10LMOMDCF	890CD-531600B0-000-1A3PA	R08-C2-F0PR
10294-02050	LEE10LRBOMD71	890CD-531600B0-000-1A3PE	R08-C2-F0PR
10294-02050	LEE10LRCF	890CD-531600B0-000-1B000	R08-C2-F0R0
10294-02100	LEE10LROMDCF	890CD-531600B0-000-2A000	R08-C2-F0R0
10294-02100	LEE10SMORCF	890CD-532100B0-000-1A000	R08-C2-L000
10294-02200	LEE10SRBOMD71	890CD-532100B0-000-1A0P0	R08-C2-L000
10294-02200	LEE10SROMDCF	890CD-532100B0-000-1A0PA	R08-C2-R0G0
10294-02210	LEE10ZLRCF	890CD-532100B0-000-1A300	R08-C2-R0G0
10294-02210	LEE12L3/4UNFCF	890CD-532100B0-000-1A30A	R08E3-10.0N
10294-02400	LEE12L9/16UNFOMDCF	890CD-532100B0-000-1A3F0	R08X1
10294-02400	LEE12LMOMDCF	890CD-532100B0-000-1A3P0	R08X1.5
10294-02450	LEE12LMOROMDCF	890CD-532100B0-000-1A3PA	R08X1.571
10294-02450	LEE12LRBOMD71	890CD-532100B0-000-1A500	R08X1.5CF
10294-02480	LEE12LROMDCF	890CD-532100B0-000-1A5P0	R08X171
10294-02480	LEE12SROMDCF	890CD-532100B0-000-1B000	R08X1CF
10294-02600	LEE12ZLRCF	890CD-532100B0-000-2A000	R08X2
10294-02600	LEE15LMOMDCF	890CD-532100B0-000-2A30A	R08X2.5CF
10294-02700	LEE15LMOROMDCF	890CD-532120B0-000-1A000	R08X2CF
10294-02700	LEE15LRCF	890CD-532120B0-000-1A10A	R09-02-FB00
10294-02800	LEE15LROMDCF	890CD-532120B0-000-1A1P0	R09-02-FB00
10294-02800	LEE16SRCF	890CD-532120B0-000-1A30A	R09-C2-CB00
10294-03250	LEE16SROMDCF	890CD-532120B0-000-1A3P0	R09-C2-CB00
10294-03250	LEE18L11/16UNOMDCF	890CD-532120B0-000-1A3PA	R09-C2-FB00
10294-03380	LEE18LMOMDCF	890CD-532120B0-000-1A500	R09-C2-FB00
10294-03380	LEE18LMOROMDCF	890CD-532120B0-000-1A5F0	R1/2X0.049PHR
10294FIL	LEE18LRCF	890CD-532120B0-000-1A5P0	R1/2X0.049TP316/L
10294FIL	LEE18LROMDCF	890CD-532120B0-000-1B000	R1/2X0.065PHR
10295-00150	LEE18ZLRCF	890CD-532120B0-000-2A000	R1/2X0.065TP316/L
10295-00150	LEE20SRCF	890CD-532120B0-000-2A3P0	R1/2X0.083TP316/L
10295-00250	LEE20SROMDCF	890CD-532160B0-000-1A000	R1/4X0.049
10295-00250	LEE22LM27X2OROMDCF	890CD-532160B0-000-1A1P0	R1/4X0.049TP316/L
10295-00350	LEE22LRCF	890CD-532160B0-000-1A30A	R10-04D
10295-00350	LEE22LROMDCF	890CD-532160B0-000-1A3DA	R10-04D
10295-00400	LEE22LRVITOMDCF	890CD-532160B0-000-1A3E0	R100CB6601
10295-00400	LEE22ZLRCF	890CD-532160B0-000-1A3P0	R100VM507
10295-00410	LEE25SROMDCF	890CD-532160B0-000-1A3PA	R100VM507-CH
10295-00410	LEE28L15/16UNOMDCF	890CD-532160B0-000-1A3TA	R100VM5872
10295-00485	LEE28LRCF	890CD-532160B0-000-1A5P0	R100VM607

10295-00485	LEE28LROMDCF	890CD-532160B0-000-1B000	R101.6X16ST52
10295-00500	LEE28ZLRCF	890CD-532160B0-000-1B30A	R105G04C
10295-00500	LEE30SROMDCF	890CD-532160B0-000-1B3P0	R105G04C
10295-00540	LEE35LROMDCF	890CD-532160B0-000-2A000	R10M07S4SN
10295-00540	LEE35ZLRCF	890CD-532160B0-000-2A50A	R10M17S4SN
10295-00590	LEE42LROMDCF	890CD-532160B0-000-2A77A	R10M25S1SN
10295-00590	LEE42ZLRCF	890CD-532160B0-000-2B000	R10M25S4SN
10295-00600	LEN100EP00242NNN00000CVN	890CD-53216SB0-000-1A000	R10M-2-Y-F
10295-00600	LEN100SP00592NNN00000CVN	890CD-53216SB0-000-2A000	R10M35S4SN
10295-00650	LEN100SP00692NNN00000CVN	890CD-532240C0-000-1A000	R10PH
10295-00650	LEN100SP00892NNN00000CVN	890CD-532240C0-000-1A0F0	R10R07S4SN
10295-00680	LEN150EP00850NNN00000NNN	890CD-532240C0-000-1A30A	R10R17L1SN
10295-00680	LEN150EP00900NNN00000NNN	890CD-532240C0-000-1A3E0	R10R17S1SN
10295-00800	LEN150EP00938NNN00000NNN	890CD-532240C0-000-1A3F0	R10R17S4SN
10295-00800	LEN150EP01000NNN00000NNN	890CD-532240C0-000-1A3FA	R10R17S4SV
10295-00900	LEN150EP01100NNN00000NNN	890CD-532240C0-000-1A3P0	R10R25S1SN
10295-00900	LEN150EP01158NNN00000NNN	890CD-532240C0-000-1A3PA	R10R25S4SN
10295-00925	LEN150EP01200NNN00000NNN	890CD-532240C0-000-1B000	R10R35S4SN
10295-00925	LEN150EP01300NNN00000NNN	890CD-532240C0-000-1B30A	R10RVP
10295-00950	LEN150EP01400NNN00000NNN	890CD-532240C0-000-1B3P0	R10RVS
10295-00950	LEN150EP01438NNN00000NNN	890CD-532240C0-000-1B3PA	R10RVS-UP
10295-01035	LEN150EP01458NNN00000NNN	890CD-532240C0-000-2A000	R10SM1608
10295-01035	LEN150EP01500NNN00000NNN	890CD-532240C0-000-2A30A	R10SM16872
10295-01530	LEN150EP01558NNN00000NNN	890CD-532240C0-000-2A77A	R10SM16872OHCSS
10295-01530	LEN150EP01600NNN00000NNN	890CD-532300C0-000-1A000	R10SM16882
10295-01533	LEN150EP01640NNN00000NNN	890CD-532300C0-000-1A300	R10SM908
10295-01533	LEN150EP01700NNN00000NNN	890CD-532300C0-000-1A30A	R10SM987201SCSS
10295-01650	LEN150EP01758NNN00000NNN	890CD-532300C0-000-1A3N0	R10SM987202SCSS
10295-01650	LEN150EP01778NNN00000NNN	890CD-532300C0-000-1A3P0	R10SM9882
10295-01700	LEN150EP01800NNN00000NNN	890CD-532300C0-000-1A3PA	R10V207
10295-01700	LEN150EP01900NNN00000NNN	890CD-532300C0-000-1A3PE	R10V2075
10295-01850	LEN150EP01958NNN00000NNN	890CD-532300C0-000-1B000	R10V207-GY
10295-01850	LEN150EP02000NNN00000NNN	890CD-532300C0-000-1B30A	R10V207-HC
10295-01900	LEN150EP02100NNN00000NNN	890CD-532300C0-000-2A000	R10V208
10295-01900	LEN150EP02200NNN00000NNN	890CD-53230SC0-000-2A000	R10V2872
10295-01910	LEN150EP02230NNN00000NNN	890CD-532390D0-000-1A000	R10V407
10295-01910	LEN150EP02300NNN00000NNN	890CD-532390D0-000-1A3F0	R10V407-C1S
10295-01930	LEN150EP02500NNN00000NNN	890CD-532390D0-000-1A3FA	R10V407-CL
10295-01930	LEN150EP02510NNN00000NNN	890CD-532390D0-000-1A3P0	R10V407-CM
10295-01950	LEN150EP02600NNN00000NNN	890CD-532390D0-000-1B000	R10V407-OL
10295-01950	LEN150EP02800NNN00000NNN	890CD-532390D0-000-2A000	R10V408
10295-02000	LEN150EP04058NNN00000NNN	890CD-532450D0-000-1A000	R10V488
10295-02000	LEN150FP02000NNN00000NNN	890CD-532450D0-000-1A30A	R10V607
10295-02050	LEN150SP10000NNN00000NNN	890CD-532450D0-000-1A3P0	R10V607-GY
10295-02050	LF025HM001	890CD-532450D0-000-1B000	R10V807
10295-02100	LF032HM001	890CD-532450D0-000-1B3H0	R10V807-GY
10295-02100	LF040HM001	890CD-532450D0-000-2A30A	R10V808
10295-02110	LF050HM001	890CD-532590D0-000-1A000	R10VRMM2812
10295-02110	LF063HM001	890CD-532590D0-000-1A3P0	R10VRMM2812-03
10295-02200	LF100HM001	890CD-532590D0-000-1A3PA	R10X1
10295-02200	LF124LOMDCF	890CD-532590D0-000-1B000	R10X1.5
10295-02210	LF132LOMDCF	890CD-532590D0-000-1B30A	R10X1.571
10295-02210	LF132LOMDSS	890CD-532590D0-000-2A3NA	R10X1.5CF

10295-02450	LF140LOMDCF	890CD-532870E0-000-1A000	R10X171
10295-02450	LF140LOMDSS	890CD-532870E0-000-2A000	R10X1CF
10295-02480	LF148LOMDCF	890CD-532870E0-007-1A3PA	R10X2
10295-02480	LF148LOMDSS	890CD-533105F2-000-1A000	R10X2.5
10295-02700	LF164LOMDCF	890CD-533145F2-000-1A000	R10X2.5CF
10295-02700	LF164LOMDSS	890CD-533145F2-007-1A000	R10X271
10295-02800	LF180LOMDCF	890CD-533145F2-007-1A1PA	R10X2CF
10295-02800	LF180LOMDSS	890CD-533145F2-007-1A3PA	R10X3CF
10295-03250	LF196LOMDCF	890CD-533156F2-007-1A000	R10X51P
10295-03250	LF2002H01	890CM-A-UK-00-00	R10X51P
10295-03380	LF24CFX	890CM-A-US-00-00	R10Y57
10295-03380	LF2502H01	890CS-532320B0-B00-U	R10Y57
10295-05000	LF3202H01	890CS-532540B0-B00-U	R11/2X0.156PHR
10295-05000	LF3203L01	890CS-533108D0-B00-U	R11/4X0.120PHR
10296FIL	LF32CFX	890CS-533162D0-B00-U	R11-02-000
10296FIL	LF4002H01	890HAFJW-D5XY	R11-02-000
10297FIL	LF5002H01	890PXCA-43215M-000-1A000	R114.3X17.5ST52
10297FIL	LF801411	890PXSA-43580M-B00-1A000	R115X15ST52
1029FIL	LF801431	890PXSA-63310M-B00-1A000	R115X4
1029FIL	LF801450	890SD-231300B0-B00-1A000	R119-04C
102A-0326	LF801451	890SD-231300B0-B00-1B000	R119-04C
102A-0326-V	LF802412	890SD-231300B0-B00-2A3TA	R119-04JX64
102A-0408	LF802413	890SD-231550B0-B00-1B000	R119-04JX64
102A-0409	LF802414	890SD-231700B0-B00-1A000	R119-08J
102A-0411	LF802432	890SD-231700B0-B00-1B000	R119-08J
102A-0412	LF802434	890SD-232110B0-B00-1A000	R119G02C
102A-0414	LF802452	890SD-232110B0-B00-1A500	R119G02C
102A-0418	LF802453	890SD-232110B0-B00-1B000	R119G03CK
102A-0434	LF802454	890SD-232165B0-B00-1A000	R119G03CK
102A-0438	LF802455	890SD-232165B0-B00-1B000	R119G03J
102A-0467	LFC.622111	890SD-232165B0-B00-2A000	R119G03J
102A-0710	LFC.622112	890SD-232240C0-B00-1B000	R119G04CP
102A-0785	LFC.622122	890SD-232300C0-B00-1A000	R119G04CP
102A-1067	LFC.622142	890SD-232300C0-B00-1B000	R119G04J
102A-1465	LFC.622211	890SD-232300C0-B00-2A000	R119G04J
102A-1501	LFC.622212	890SD-432730E0-B00-1A000	R119G06C
102A-1663	LFC.622221	890SD-432730E0-B00-1A0P0	R119G06C
102A-2717	LFC.622222	890SD-432730E0-B00-1A100	R119G08C
102A-2927	LFC.622231	890SD-432730E0-B00-1A30A	R119G08C
102A-2928	LFC.622232	890SD-432730E0-B00-1A3P0	R119G08CK
102A-3024	LFC.622241	890SD-432730E0-B00-1A500	R119G08CK
102A-3375	LFC.622242	890SD-432730E0-B00-1B000	R119G08J
102A-3952	LFC.622411	890SD-432870E0-B00-1A000	R119G08J
102A-3953	LFC.622412	890SD-432870E0-B00-1A100	R119G10JK
102A-6750	LFC.622422	890SD-432870E0-B00-1A3P0	R119G10JK
102A-6751	LFC.622431	890SD-432870E0-B00-1B000	R119G12C
102A-6753	LFC.622432	890SD-433105F1-B00-1A000	R119G12C
102A-6781	LFC.622442	890SD-433105F1-B00-1A0T0	R119G12J
102A-6835	LG100	890SD-433105F1-B00-1B000	R119G12J
102A-6932	LG50	890SD-433105F2-B00-1A000	R119G16J
102A-6938	LINK-DSD-DEV-200	890SD-433105F2-B00-1A30A	R119G16J
102A-7106	LINK-DSD-DEV-50	890SD-433105F2-B00-1A3PA	R119G20J
102A-7229	LINK-DSD-RUN	890SD-433145F1-B00-1A000	R119G20J

102A-7606	LINV55	890SD-433145F1-B00-1B000	R11-C2-000
102A-8474	LJFB6A8	890SD-433145F2-B00-1A000	R11-C2-000
102A-8476	LJFB8A8	890SD-433145F2-B00-1A300	R11-C2-L00
102A-8509	LJFBM10A8	890SD-433145F2-B00-1A3P0	R11-C2-L00
102A-8526	LJFBM12A8	890SD-433156F1-B00-1B000	R11T
102A-8527	LLEAD10	890SD-433156F2-B00-1A000	R120-10MB-AQII
102A-8534	LLEAD10	890SD-433156F2-B00-1B000	R120P
102A-8535	LMC1211S0BP	890SD-433180F1-B00-1A000	R120S
102A-8537	LMC1221S0B	890SD-433180F1-B00-1A0P0	R120S-HD
102A-8587	LMC1221S0BP	890SD-433180F1-B00-1B000	R120T
102A-8664	LMC2021S0BP	890SD-433180F1-B00-2A000	R120T-H-B1
102A-8960	LMC2041S0BP	890SD-433180F2-B00-1A0F0	R-124-CFX
102A-8961	LMC-P20-43S072N-SP55,SP60	890SD-433180F2-B00-1A3P0	R-124FTFCF
102A-9036	LME1F-10	890SD-433180F2-B07-1A0P0	R-124LBFS
102A-9347	LMS1-100	890SD-433216G2-B00-1A000	R-124LLFCF
102A-9442	LNFB3*480/008	890SD-433250G2-B00-1A000	R-124LTFCF
102A-9477	LNFB3*480/018	890SD-433590J2-B00-1A000	R-124MTFRCF
102A-9731	LNFB3*480/033	890SD-531200B0-B00-1A000	R-124-SSX
102B-0216	LNFB3*480/046	890SD-531200B0-B00-1A0P0	R-124WA-48.3X2.6FS
102B-1387	LNFB3*480/060	890SD-531200B0-B00-1A30A	R-124WA-48.3X2.6S
102B-2911	LNFB3*480/082	890SD-531200B0-B00-1A3P0	R124X
102B-3076	LNFE1*230/012	890SD-531200B0-B00-1A3TA	R125T
102B-6324	LNFK3*480/018	890SD-531200B0-B00-1A500	R12P
102B-6411	LNFRA1*230/001	890SD-531200B0-B00-1B000	R12S
102B-8357	LNFRA1*230/006	890SD-531350B0-B00-1A000	R12SUL
102B-8377	LNFRA1*230/012	890SD-531350B0-B00-1A0P0	R12T
102C-0475-C	LOCACTN7649	890SD-531350B0-B00-1A100	R12X
102C-2757	LOCLS567-250	890SD-531350B0-B00-1A3P0	R12X1
102C-2759	LOCLS567-50	890SD-531350B0-B00-1A500	R12X1.5
102C-4004	LPS10/2	890SD-531350B0-B00-1B000	R12X1.5-316BA
102E-1821	LPS10/2	890SD-531350B0-B00-1B0P0	R12X1.571
102F-1113	LPS10/3	890SD-531350B0-B00-2A000	R12X1.5CF
102F-1249	LPS10/3	890SD-531350B0-B00-2B000	R12X1.5ST52CF
10-3/4 F5OG-S	LPSV10	890SD-531450B0-B00-1A000	R12X1-316BA
10-3/8 F5OG-S	LPSV10	890SD-531450B0-B00-1A100	R12X171
1030 1070	LQX-0001-290-001	890SD-531450B0-B00-1A300	R12X1CF
1030/0201413	LQX12-2W12EP48-000	890SD-531450B0-B00-1A3P0	R12X2
1030/0201415	LQX12-2W12EPFS-000	890SD-531450B0-B00-1A3PA	R12X2.5CF
1030/020-1417	LQX12-2W12FF48-001	890SD-531450B0-B00-1A3T0	R12X271
1030/0201509	LQX12-2W12FFFS-000	890SD-531450B0-B00-1A5P0	R12X2CF
1030/0201701	LQX12-2W24EP48-000	890SD-531450B0-B00-1B000	R12X2ST52CF
1030/020-1750	LQX12-2W24EPFS-000	890SD-531450B0-B00-2A000	R12X3.5CF
1030/020-2101-3	LQX12-2W24FF48-000	890SD-531450B0-B00-2A1SA	R12X3CF
1030/GE20D0	LQX12-2W24FFFS-000	890SD-531450B0-B00-2A30A	R130X15ST52
1030-0241	LQX12-3W12EP48-000	890SD-531450B0-B00-2A3HA	R-132-CFX
1030-0343	LQX12-3W12EPFS-000	890SD-531600B0-B00-1A000	R-132FLFCF
1030-0453	LQX12-3W12FF48-000	890SD-531600B0-B00-1A0P0	R-132FTFCF
1030-1155	LQX12-3W12FFFS-000	890SD-531600B0-B00-1A3P0	R-132LBFS
1030-1381	LQX12-3W24EPFS-000	890SD-531600B0-B00-1B000	R-132LBFSS
10302FIL	LQX12-3W24FF48-000	890SD-531600B0-B00-1B0D0	R-132LLFCF
10302FIL	LQX12-3W24FFFS-000	890SD-531600B0-B00-1B3D0	R-132LTFCF
10303FIL	LRP-16-149-000	890SD-531600B0-B00-2A000	R-132MTFR11/2CF
10303FIL	LRP-16-149-000	890SD-531600B0-B00-2A1PA	R-132MTFR2CF

103044-003	LRP-95-022	890SD-532100B0-B00-1A000	R-132-SSX
103044-005	LRP-95-022	890SD-532100B0-B00-1A0P0	R-132WA-60.3X2.9FS
1030-4877	LRP-95-058	890SD-532100B0-B00-1A30A	R-132WA-60.3X2.9S
103-0500062-NT	LRP-95-058	890SD-532100B0-B00-1A3P0	R132X
103-0500062-NT-25MT	LRP-95-059	890SD-532100B0-B00-1A3TA	R13P
10305FIL	LRP-95-059	890SD-532100B0-B00-1A500	R13T
10305FIL	LRP-95-060	890SD-532100B0-B00-1A5P0	R-140-CFX
1030-6096	LRP-95-060	890SD-532100B0-B00-1B000	R-140FLFCF
1030-6097	LRP-95-061	890SD-532100B0-B00-2A000	R-140FTFCF
1030-6706	LRP-95-061	890SD-532100B0-B00-2A3SA	R-140-SSX
1030-6878	LRP-95-087	890SD-532100B0-B00-2A500	R-140WA-76.1X3.2FS
1030-7582	LRP-95-087	890SD-532120B0-B00-1A000	R-140WA-76.1X3.2S
1030-7819	LRP-95-093	890SD-532120B0-B00-1A300	R140X
10307FIL	LRP-95-093	890SD-532120B0-B00-1A3P0	R1-410000
10307FIL	LRP-95-143	890SD-532120B0-B00-1B000	R14-10915-0
1030-8298	LRP-95-143	890SD-532120B0-B00-2A000	R14-10981-5
1030-8611	LRP-95-145	890SD-532160B0-B00-1A000	R14-11260-0
10308FIL	LRP-95-145	890SD-532160B0-B00-1A300	R14-11318-0
10308FIL	LRP-95-146	890SD-532160B0-B00-1A3P0	R14-12088-0
1030-9050	LRP-95-146	890SD-532160B0-B00-1A500	R14-12184-0
1030-9447	LRP-95-163	890SD-532160B0-B00-1B000	R14-12261-0
1030-9447-C	LRP-95-163	890SD-532160B0-B00-1B3H0	R14-12283-0
1030-9841	LRP-95-181	890SD-532160B0-B00-2A000	R14-12336-0
10309FIL	LRP-95-181	890SD-53216SB0-B00-1A000	R1449A
10309FIL	LRP-95-189	890SD-532240C0-B00-1A000	R1449B
1030G	LRP-95-189	890SD-532240C0-B00-1A30A	R1450A
1030Y04F00	LRP-95-190	890SD-532240C0-B00-1A3P0	R1450B
1030Y04F01	LRP-95-190	890SD-532240C0-B00-1A3PA	R1451A
1030Y04F02	LRP-95-239	890SD-532240C0-B00-1A3T0	R1451B
1030Y04F03	LRP-95-239	890SD-532240C0-B00-1A5S0	R1452A
1030Y04F04	LRP-95-242	890SD-532240C0-B00-1B000	R1452B
1030Y04F05	LRP-95-242	890SD-532240C0-B00-1B0D0	R1453A
1030Y04F07	LRP-95-243	890SD-532240C0-B00-1B3H0	R1453B
1030Y04F09	LRP-95-243	890SD-532240C0-B00-2A000	R1454A
1030Y04F10	LRP-95-244	890SD-532300C0-B00-1A000	R1454B
1030Y06F00	LRP-95-244	890SD-532300C0-B00-1A0N0	R1455A
1030Y06F01	LRP-95-245	890SD-532300C0-B00-1A300	R1455B
1030Y06F02	LRP-95-245	890SD-532300C0-B00-1A3P0	R1456A
1030Y06F03	LRP-95-247	890SD-532300C0-B00-1B000	R1456B
1030Y06F04	LRP-95-247	890SD-532300C0-B00-2A000	R1457A
1030Y06F05	LRP-95-248	890SD-532300C0-B00-2A500	R1457B
1030Y06F07	LRP-95-248	890SD-53230SC0-B00-1A000	R1458A
1030Y06F09	LRP-95-249	890SD-53230SC0-B00-1A100	R1458B
1030Y06F10	LRP-95-249	890SD-53230SC0-B00-1A300	R1459A
10310FIL	LRP-95-250	890SD-53230SC0-B00-1A500	R1459B
10310FIL	LRP-95-250	890SD-53230SC0-B00-1A5P0	R-148-CFX
10311FIL	LRP-95-251	890SD-532390D0-B00-1A000	R-148-SSX
10311FIL	LRP-95-251	890SD-532390D0-B00-1A0P0	R-148WA-88.9X3.05FS
10312FIL	LRP-95-252	890SD-532390D0-B00-1A3P0	R-148WA-88.9X3.6FS
10312FIL	LRP-95-252	890SD-532390D0-B00-1B000	R-148WA-88.9X3.6S
10313FIL	LRP-95-253	890SD-532390D0-B00-1B3H0	R148X
10313FIL	LRP-95-253	890SD-532390D0-B00-2A5H0	R14X1.571
10315FIL	LRP-95-254	890SD-532450D0-B00-1A000	R14X1.5CF

10315FIL	LRP-95-254	890SD-532450D0-B00-1A100	R14X2
10316FIL	LRP-95-310	890SD-532450D0-B00-1A3D0	R14X2.5
10316FIL	LRP-95-310	890SD-532450D0-B00-1A3P0	R14X2.571
10317FIL	LRP-95-587	890SD-532450D0-B00-1B000	R14X2.5CF
10317FIL	LRP-95-587	890SD-532450D0-B00-2A500	R14X271
10318FIL	LRP-95-673	890SD-532590D0-B00-1A000	R14X2CF
10318FIL	LRP-95-673	890SD-532590D0-B00-1A100	R14X3CF
1031FIL	LRP-95-698	890SD-532590D0-B00-1A300	R150V5072
1031FIL	LRP-95-698	890SD-532590D0-B00-1A3P0	R150V5072-C2S
10322FIL	LRP-95-699	890SD-532590D0-B00-1A500	R150V5072-CH
10322FIL	LRP-95-699	890SD-532590D0-B00-1A5N0	R150X15ST52
10325FIL	LRP-95-716	890SD-532590D0-B00-1B000	R-156WA-100X4.0FS
10325FIL	LRP-95-716	890SD-532590D0-B00-2A000	R-156WA-100X4.0S
10326FIL	LRP-95-830	890SD-532730E0-B00-1A000	R15P
10326FIL	LRP-95-830	890SD-532730E0-B00-1B3H0	R15P407
10328FIL	LRP-95-958	890SD-532870E0-B00-1A000	R15RVP
10328FIL	LRP-95-958	890SD-532870E0-B00-1A300	R15S
10329FIL	LRP-95-965	890SD-532870E0-B07-1A000	R15T
10329FIL	LRP-95-965	890SD-533105F1-B00-1A000	R15X1
1032FIL	LRP-95-967	890SD-533105F2-B00-1A000	R15X1.5
1032FIL	LRP-95-967	890SD-533105F2-B00-1A300	R15X1.571
10-32X1/2-SHC-SCREW	LRP-96-005	890SD-533145F1-B00-1A000	R15X1.5CF
10-32X1/2-SHC-SCREW-100	LRP-96-005	890SD-533145F2-B00-1A000	R15X1.5ST52CF
10330FIL	LRP-96-137	890SD-533145F2-B07-1A1PA	R15X171
10330FIL	LRP-96-137	890SD-533156F2-B00-1A000	R15X1CF
10331FIL	LRP-96-157	890SD-533156F2-B07-1A000	R15X2
10331FIL	LRP-96-157	892-121000	R15X271
10333FIL	LRP-96-160	8952DL-12	R15X2CF
10333FIL	LRP-96-160	8952DL-12	R15X2ST52CF
10334FIL	LRP-96-182	8952R	R15Y1207
10334FIL	LRP-96-182	8952R	R16-02-000
10335FIL	LRP-96-211	896FIL	R16-02-000
10335FIL	LRP-96-211	896FIL	R16-02-G00
10336FIL	LRP-96-301	8972-8	R16-02-G00
10336FIL	LRP-96-301	8972-8	R16-02-GH0
10337FIL	LRP-96-308	897HAFJW-M5XY	R16-02-GH0
10337FIL	LRP-96-308	898FIL	R16-02-GL0
10338FIL	LRP-96-310	898FIL	R16-02-GL0
10338FIL	LRP-96-310	8998S	R16-02-L00
10339FIL	LRP-96-543	8A8F-B8LJ2-SSP	R16-02-L00
10339FIL	LRP-96-543	8A-B8LJ2-BN-SSP	R16-03-000
1033FIL	LRP-96-677	8A-B8LJ2-BP	R16-03-000
1033FIL	LRP-96-677	8A-B8LJ2-BP-C3	R16-03-G00
10340FIL	LRP-96-678	8A-B8LJ2-EPR-SSP	R16-03-G00
10340FIL	LRP-96-678	8A-B8LJ2-SSP	R16-03-H00
10341FIL	LRP-96-679	8A-B8LJ2-SSP-C3	R16-03-H00
10341FIL	LRP-96-679	8A-B8LJ2-V-SSP	R16-04-000
10342FIL	LRP-96-680	8A-B8LJ-BN-BP	R16-04-000
10342FIL	LRP-96-680	8A-B8LJ-BN-SSP	R16-04-G00
10343-10-10-SM	LRP-96-681	8A-B8LJ-BP	R16-04-G00
10343-10-8-SM	LRP-96-681	8A-B8LJ-EPR-SSP	R16-04-GHN
10343-12-10-SM	LRP-96-698	8A-B8LJ-SSP	R16-04-GHN
10343-12-8-SM	LRP-96-698	8A-B8LJ-SSP-C3	R16-04-LN0

10343-16-16-SM	LRP-96-701	8A-B8LJ-V-SSP	R16-04-LN0
10343-6-6-SM	LRP-96-701	8A-B8XJ2-SSP	R160P
10343-8-6-SM	LRP-96-702	8A-B8XJ2-SSP-C3	R160T
10344FIL	LRP-96-702	8A-B8XJ2-V-SSP	R160T-D-MAX
10344FIL	LRP-96-704	8A-B8XJ-SSP	R16-20023-0
10345FIL	LRP-96-704	8A-B8XJ-V-SSP	R16-20124-0
10345FIL	LRP-96-705	8A-C6L-1/3-BN-SS	R16-20603-0
10346-00325	LRP-96-705	8A-C6L-1/3-EPR-SS	R-164-CFX
10346-00325	LRP-96-710	8A-C6L-1/3-SS	R-164-SSX
10346-00380	LRP-96-710	8A-C6L-100-SS	R-164WA-115X4.0FS
10346-00380	LRP-96-713	8A-C6L-10-SS	R-164WA-115X4.0S
10346-10-10	LRP-96-713	8A-C6L-1-B	R164X
10346-10-6	LRP-96-720	8A-C6L-1-BN-SS	R16-C2-000
10346-10-8	LRP-96-720	8A-C6L-1-SS	R16-C2-000
10346-12-10	LRP-96-725	8A-C6L-25-SS	R16-C2-G00
10346-12-12	LRP-96-725	8A-C6L-50-SS	R16-C2-G00
10346-12-8	LRP-96-730	8A-C6L-5-BN-SS	R16-C2-GH0
10346-14-12	LRP-96-730	8A-C6L-5-EPR-SS	R16-C2-GH0
10346-16-12	LRP-96-736	8A-C6L-5-SS	R16-C2-GHN
10346-16-16	LRP-96-736	8A-C8L-1/3-B	R16-C2-GHN
10346-20-16	LRP-96-937	8A-C8L-1/3-BN-SS	R16-C2-H00
10346-20-20	LRP-96-937	8A-C8L-1/3-EPR-SS	R16-C2-H00
10346-4-4	LRP-96-938	8A-C8L-1/3-SS	R16-C2-L00
10346-4-6	LRP-96-938	8A-C8L-100-BN-SS	R16-C2-L00
10346-5-4	LRP-96-940	8A-C8L-100-SS	R16-C3-000
10346-5-5	LRP-96-940	8A-C8L-10-B	R16-C3-000
10346-5-6	LRP-96-942	8A-C8L-10-BN-SS	R16-C3-G00
10346-6-4	LRP-96-942	8A-C8L10-EPR-SS	R16-C3-G00
10346-6-5	LRP-96-943	8A-C8L-10-SS	R16-C3-L00
10346-6-6	LRP-96-943	8A-C8L-1-B	R16-C3-L00
10346-8-5	LRP-96-944	8A-C8L-1-BN-SS	R16-C4-000
10346-8-6	LRP-96-944	8A-C8L-1-EPR-SS	R16-C4-000
10346-8-8	LRP-97-001	8A-C8L-1-SS	R16-C4-GHN
10347-00080	LRP-97-001	8A-C8L-1-SS-C3	R16-C4-GHN
10347-00080	LRV08LRED09QOCF	8A-C8L-25-B	R16-C4-H00
10347-00100	LRV08LRED10QOCF	8A-C8L-25-BN-SS	R16-C4-H00
10347-00100	LRV08LRED15QOCF	8A-C8L-25-SS	R16-C4-L00
10347-00200	LRV08LRED17QOCF	8A-C8L-50-BN-SS	R16-C4-L00
10347-00200	LRV10LRED25Q0.8DOCF	8A-C8L-50-SS	R16-C4-N00
10347-00325	LRV12LRED10QOCF	8A-C8L-5-B	R16-C4-N00
10347-00325	LRV12LRED17QOCF	8A-C8L-5-BN-SS	R16-C4-V00
10347-00330	LRV12LRED18QOCF	8A-C8L-5-EPR-B	R16-C4-V00
10347-00330	LRV12LRED20QOCF	8A-C8L-5-EPR-SS	R16E07A1SN
10347-00350	LRV12LRED24QOCF	8A-C8L-5-SS	R16E07S1SN
10347-00350	LRV15LR1/2ED15QOCF	8A-C8L-5-SS-C3	R16E07S1SV
10347-00380	LRV15LR1/2ED30QOCF	8A-C8L-75-SS	R16E17L1SN
10347-00380	LRV15LR1/2ED60QGOCF	8A-CB8L-1-PF-SS	R16E17S1SN
10347-00400	LRV15LRED53Q1.0DOCF	8A-CO8L-1/3-BN-SS-C3	R16E17S1SNS07
10347-00400	LRV15LRED64Q1.0DOCF	8A-CO8L-1/3-EPR-SS	R16E25S1SN
10347-00450	LRV18LRED15QOCF	8A-CO8L-1/3-V-SS	R16E35S1SN
10347-00450	LRV18LRED17QOCF	8A-CO8L10-BN-SS	R16X
10347-00460	LRV18LRED25QOCF	8A-CO8L-10-KZ-SS	R16X1.5
10347-00460	LRV18LRED32QOCF	8A-CO8L-10-V-SS	R16X1.571

10347-00485	LRV18LRED37QOCF	8A-CO8L-1-BN-SS	R16X1.5CF
10347-00485	LRV18LRED45QOCF	8A-CO8L-1-EPR-SS	R16X1.5ST52CF
10347-00500	LRV18LRED55QOCF	8A-CO8L-1-KZ-SS	R16X2
10347-00500	LRV18LRED63QOCF	8A-CO8L-1-V-SS	R16X2.5
10347-00580	LRV18LRED75QOCF	8A-CO8L-25-V-SS	R16X2.5-316
10347-00580	LRV22LRED130QOCF	8A-CO8L-50-V-SS	R16X2.571
10347-00600	LRV22LRED45QOCF	8A-CO8L-5-V-SS	R16X2.5CF
10347-00600	LRV22LRED87QOCF	8A-F8L-100-B	R16X2.5ST52CF
10347-00650	LRV3/8WEO15Q0.8DOCF	8A-F8L-100-EPR-B	R16X2-316
10347-00650	LS610EWR2002	8A-F8L-100-EPR-SS	R16X271
10347-00800	LS610EWR6304	8A-F8L-100-SS	R16X2CF
10347-00800	LS610EXR6300	8A-F8L-10-BN-SS	R16X2ST52CF
10347-00900	LS620ELR2408	8A-F8L-10-EPR-B	R16X2X14071
10347-00900	LS810ERR6300	8A-F8L-10-EPR-SS	R16X2X140CF
10347-01660	LS820EJR6300-Z=X2	8A-F8L-10-SS	R16X3
10347-01660	LTR101-270-BD42-C	8A-F8L-1-EPR-SS	R16X371
10347-01920	LTR201-180-AA21J-C	8A-F8L-1-SS	R16X3CF
10347-01920	LUBSS	8A-F8L-250-BN-SS	R18-02-F0G0
10348-00080	LV14E6X5MLX	8A-F8L-250-SS	R18-02-F0G0
10348-00080	LV3B6B	8A-F8L-450-SS	R-180-CFX
10348-00100	LV3B6B	8A-F8L-50-B	R-180-SSX
10348-00100	LV4B6B	8A-F8L-50-BN-SS	R-180WA-140X4.5FS
10348-00110	LV4B6B	8A-F8L-50-EPR-SS	R180X
10348-00110	LV54D6X5MLXC	8A-F8L-50-SS	R18-C2-D000
10348-00130	LV6B6B	8A-F8L-5-B	R18-C2-D000
10348-00130	LV6B6B	8A-F8L-5-SS	R18-C2-F000
10348-00160	LV8BAB	8A-F8L-5-SS-C3	R18-C2-F000
10348-00160	LV8BAB	8A-FT8-100-SS	R18-C2-F0G0
10348-00193	LVA06WE01A1	8A-FT8-10-BN-SS	R18-C2-F0G0
10348-00193	LVA06WE03A1	8A-FT8-10-EPR-SS	R18-C2-G000
10348-00240	LVD06-05A1	8A-FT8-10-SS	R18-C2-G000
10348-00240	LVD06VB03B1	8A-FT8-10-SS-C3	R18-C2-R000
10348-00300	LVD06VB04A2	8A-FT8-1-EPR-SS	R18-C2-R000
10348-00300	LVG06VA10A1	8A-FT8-1-SS	R18-C3-D000
10348-00325	LX310BCR0009	8A-FT8-250-SS	R18-C3-D000
10348-00325	LX310BFR7003	8A-FT8-450-SS	R18-C3-F000
10348-00350	LX310BSR0021	8A-FT8-50-EPR-SS	R18-C3-F000
10348-00350	LX310BSR3002	8A-FT8-50-SS	R18-C3-F0G0
10348-00380	LX310BSR7000	8A-FT8-5-EPR-SS	R18-C3-F0G0
10348-00380	LX310BSR7000-Z=X2	8A-FT8-5-SS	R18-C3-F0R0
10348-00400	LX320BFR0011	8A-FT8-5-SS-C3	R18-C3-F0R0
10348-00400	LX320BFR0021	8A-HB4XK-BN-SSP	R18-C3-G000
10348-00450	LX320BFR3000	8A-HB4XK-SSP	R18-C3-G000
10348-00450	LX320BFR7000	8A-HB4XK-SSP-C3	R18-C3-S000
10348-00454	LX320BFR7000-Z=X2	8A-HB4XPKR-BN-SSP	R18-C3-S000
10348-00454	LX320BFR7500	8A-HB4XPKR-EPR-SSP	R18-C4-F000
10348-00460	LX320BKR0009	8A-HB4XPKR-SSP	R18-C4-F000
10348-00460	LX410CUR0005	8A-LC16L-SS	R18-C4-F000-72
10348-00485	LX410CWR6000	8A-MB8LPFA-SSP	R18-C4-F000-72
10348-00485	LX420CDR7002	8AP1CF	R18-C4-F0G0
10348-00500	LX420CDR7006	8AP2CF	R18-C4-F0G0
10348-00500	LX420CLR2100	8A-PR6-BNT-SS	R18-C4-G000
10348-00600	LX420CLR6000	8A-PR6-EPRT-SS	R18-C4-G000

10348-00600	LX420CLR6000-Z=X2	8A-PR6-VT-B	R18-C4-G0G0
10348-00650	LX420CLR6300	8A-PR6-VT-B-C3	R18-C4-G0G0
10348-00650	LX420CLR6300	8A-PR6-VT-SS	R18-C4-W000
10348-00800	LX420CLR7000	8A-PR6-VT-SS-C3	R18-C4-W000
10348-00800	LX420CLR7000-Z=X2	8A-SWB8L-RT-V-SS	R18X1
10348-00900	LX430CER7008-Z=X2/BAA	8A-SWB8L-RT-V-SS-C3	R18X1.5
10348-00900	LX430CKR2000	8A-U12LB-G-SS	R18X1.571
10348-01125	LX440CBR3000	8A-U12LB-G-SS-HT	R18X1.5CF
10348-01125	LX440CBR6000	8A-U12LB-T-SS	R18X1.5ST52CF
10348-01270	LX440CCR0012	8A-U12LR-G-SS	R18X1CF
10348-01270	LX440CFR6000	8A-U12LR-G-SS-HT	R18X2
10348-01660	LX440CFR6000-Z=X2	8A-U12LR-T-SS	R18X2.5
10348-01660	LX440CLR2400	8A-U16LB-G-SS	R18X2.5CF
10348-01920	LZS120/200	8A-U16LB-T-SS	R18X2-316
10348-01920	LZS200/1000	8A-U16LR-G-SS-HT	R18X271
10348-03000	LZS250/1000	8A-U16LR-T-SS	R18X2CF
10348-03000	LZS260/1000	8A-V6LK-SS	R18X2ST52CF
10348-10-10	M00040062	8A-V6LN-B	R18X3CF
10348-10-6	M00040062	8A-V6LN-EPR-SS	R-196-CFX
10348-10-8	M003-321-000	8A-V6LN-SS	R196X
10348-12-10	M004-128-000	8A-V6LN-V-SS	R19-C3-FA00
10348-12-12	M0200	8A-V6LQ-11AC-SS	R19-C3-FA00
10348-12-8	M02-090-504	8A-V6LQ-BP	R19-C4-FA00
10348-14-12	M02-090-504	8A-V6LQ-KZ-11AC-SS	R19-C4-FA00
10348-16-12	M0300	8A-V6LQ-KZ-SSP	R1E02-3124A1
10348-16-16	M03344633	8A-V6LQ-SSP	R1E02-3514A1
10348-20-16	M03344633	8A-V6LR-B	R1E02-3524A1
10348-20-20	M03-C1-000	8A-V6LR-B-C3	R1X0.095PHR
10348-24-24	M03-C1-000	8A-V6LR-SS	R1X0.120PHR
10348-32-32	M03-C1-M00	8A-V8AN-SS	R200M7M34C08L0H1E0R1
10348-4-4	M03-C1-M00	8A-V8LK-SS	R2010-8462
10348-4-6	M03-C1-S00	8A-V8LN-B	R201B-4888
10348-5-4	M03-C1-S00	8A-V8LN-SS	R201B-8813
10348-5-5	M03-C1-X00	8A-V8LN-SS-C3	R20DV12077-LT
10348-5-6	M03-C1-X00	8A-V8LN-V-SS	R20MVBB
10348-6-4	M03-C2-D00	8A-V8LR-SS	R20P
10348-6-5	M03-C2-D00	8A-V8LR-V-SS	R20RVP
10348-6-6	M03-C2-M00	8B2TU8-316	R20RVS
10348-8-5	M03-C2-M00	8BBMTXS	R20RVS-UP
10348-8-6	M03-C2-S00	8BBMTXSS	R20S
10348-8-8	M03-C2-S00	8BC4-316	R20SM1208
10349FIL	M03-C2-X00	8BC8-316	R20SM1208-LT
10349FIL	M03-C2-X00	8BC8-6MO	R20SM1608
10350FIL	M0400	8BC8-B	R20SM16872
10350FIL	M047415-1	8BC8-IIY	R20SM907-TG
10351FIL	M04742	8BC8-M	R20SM908
10351FIL	M049-284-000	8BC8-NNR	R20SM908-LT
10352FIL	M04LL71X	8BC8-TTZ	R20SM9872
10352FIL	M04LLCFX	8BF8-316	R20SM9872-C1S
10354FIL	M04LLMSX	8BF8-6MO	R20SM9872C2SCSS
10354FIL	M04LLSA131BOFF71X	8BF8-6MO-NC	R20SM9872-HO1S
10355-10-8	M04X06R	8BF8-825	R20SM9872-LT
10355-12-12	M0500	8BF8-B	R20SM9872-O1S

10355-4-3	M051-000-000	8BF8-M	R20SM9872-O2S
10355-5-4	M05121887	8BF8-T	R20SM9872-OHP
10355-5-5	M05121887	8BFGL/LK35CF-OR	R20SM9872-OMP
10355-6-4	M05742	8BFGL/LK35OMDCF	R20SM9882
10355-6-5	M05LLMSX	8BLEN8-316	R20T
10355-6-6	M0600	8BLEN8-6MO	R20X
10355-8-6	M060-140-000	8BLEN8-6MONC	R20X1.5CF
10355-8-8	M067415-1	8BLEN8-825	R20X2
10355FIL	M06742	8BLEN8-B	R20X2.5
10355FIL	M06LCFX	8BLEN8-IIY	R20X2.5-316
10356-10-8	M06LCFXBP	8BLEN8-M	R20X2.571
10356-4-4	M06LEODURX	8BLEN8-M-NC	R20X2.5CF
10356-6-5	M06LEODURXBP	8BLEN8-NNR	R20X2.5ST52CF
10356-6-6	M06LL71X	8BLEN8-TTZ	R20X2-316
10356-8-6	M06LLCFX	8BLP8-316	R20X271
10362FIL	M06LLMSX	8BLP8-6MO	R20X2CF
10362FIL	M06LLVERS71X	8BLP8-825	R20X2ST52.4
10363FIL	M06LMSX	8BLP8-B	R20X2ST52CF
10363FIL	M06LX	8BLP8-HC	R20X3
10364FIL	M06S/SDCFX	8BLP8-M	R20X3.5CF
10364FIL	M06SCFX	8BLP8-M-NC	R20X371
10366FIL	M06SEODURX	8BLP8-TI	R20X3CF
10366FIL	M06SMSX	8BMLMOLYSS	R20X3ST52CF
10367-00250	M0700	8BMLS	R20X4CF
10367-00250	M0800	8BMLSBP	R21-02-000
10367-00500	M08-02-BK00	8BMLSBPBLKOEL	R21-02-000
10367-00500	M08-02-BK00	8BMLSS	R21-02-L00
10367-00800	M08-02-BR00	8BMTXS	R21-02-L00
10367-00800	M08-02-BR00	8BMTXSBP	R21-03-000
10367-01000	M08-02-CK00	8BMTXSS	R21-03-000
10367-01000	M08-02-CK00	8BN8-316	R21-04-000
10367-01090	M08-02-CL00	8BUWS	R21-04-000
10367-01090	M08-02-CL00	8C3MXS	R21-04-R00
10367-01420	M08-02-CR00	8C3MXSS	R21-04-R00
10367-01420	M08-02-CR00	8C3P4S	R21-04-RV0
10367-01500	M08-02-CS00	8C3T4S	R21-04-RV0
10367-01500	M08-02-CS00	8C4OMLOS	R21-06-000
10367-01520	M08-02-DS00	8C4OMLOSEPDM	R21-06-000
10367-01520	M08-02-DS00	8C4OMLOSS	R210G02A
10367-02000	M08531826	8C4OMLOSV	R210G02A
10367-02000	M08531826	8C4OMXS	R210G02C
10367-02413	M087415	8C4OMXSBP	R210G02C
10367-02413	M08742	8C4OMXSS	R216G02FP
10367-02500	M08BCFXBP2	8C5OMLOS	R216G02FP
10367-02500	M08-C2-BK00	8C5OMLOSBP	R21-C2-000
10367-02700	M08-C2-BK00	8C5OMLOSS	R21-C2-000
10367-02700	M08-C2-BR00	8C5OMXS	R21-C2-L00
10368FIL	M08-C2-BR00	8C5OMXSS	R21-C2-L00
10368FIL	M08-C2-CK00	8C6MK4S	R21-C2-R00
10369FIL	M08-C2-CK00	8C6MK4SS	R21-C2-R00
10369FIL	M08-C2-CL00	8C6MLOS	R21-C3-000
10369FIL	M08-C2-CL00	8C6MLOSBP	R21-C3-000
10369FIL	M08-C2-CR00	8C6MLOSS	R21-C3-L00

1036FIL	M08-C2-CR00	8C6MXS	R21-C3-L00
1036FIL	M08-C2-CS00	8C6MXSBP	R21-C3-R00
10370-10-10-SM	M08-C2-CS00	8C6MXSBPNB	R21-C3-R00
10370-10-8-SM	M08-C2-DK00	8C6MXSS	R21-C4-000
10370-12-10-SM	M08-C2-DK00	8CMTXS	R21-C4-000
10370-12-12-SM	M08LCFX	8CMTXSS	R21-C4-L00
10370-12-8-SM	M08LCFXBP	8CNMLS	R21-C4-L00
10370-16-12-SM	M08LEODURX	8CP-6MO	R21-C4-LV0
10370-16-16-SM	M08LL71X	8CPM1CF	R21-C4-LV0
10370-20-16-SM	M08LLCFX	8CPM1SS	R21-C4-R00
10370-6-6-SM	M08LLMSX	8CPM2CF	R21-C4-R00
10370-8-6-SM	M08LMSX	8E6MK4S	R21-C4-RV0
10370-8-8-SM	M08LX	8E6MK4SS	R21-C4-RV0
10371-10-10	M08S/SDSA3X	8ECR8-316	R21-C6-000
10371-10-8-SM	M08SCFX	8ECR8-6MO	R21-C6-000
10371-12-12-SM	M08SEODURX	8ECR8-B	R21-C6-L00
10371-16-12-SM	M08SMSX	8ECR8-M	R21-C6-L00
10371-16-16-SM	M0900	8ECR8-NNR	R220G02C
10371-20-16-SM	M1/4G40S-10	8ECR8-TTZ	R220G02C
10371-20-20-SM	M1/4G40S-10	8EE8-316	R22X1.5
10371-24-24-SM	M1/4G50M-10	8EE8-6MO	R22X1.571
10371-6-6-SM	M1/4G50M-10	8EE8-B	R22X1.5CF
10371-8-6-SM	M10 ALOK-316-SET	8EE8-IIY	R22X1.5ST52CF
10371-8-8-SM	M10 ALOK-825-SET	8EE8-M	R22X2
10371FIL	M10 ALOK-HC-SET	8EE8-NNR	R22X2.5
10371FIL	M10.3TUM6-2.0MMOR-1-316	8EE8-TTZ	R22X2.5CF
10372FIL	M1000	8EMK4S	R22X2-316
10372FIL	M10-1/8F8OHGS	8EMK4SS	R22X271
10373-12-12-SM	M10-4F8OHG5S	8EMLOSS	R22X2CF
10373-16-16-SM	M107	8EMTXS	R22X2ST52CF
10373-20-20-SM	M107415	8EMTXSBP	R22X3CF
10373-24-24-SM	M10742	8EMTXSS	R230G02B
10373-32-32-SM	M10A-B6LJ2-BN-SSP	8ET8-316	R230G02B
10373FIL	M10A-B6LJ2-BP	8ET8-6MO	R230G02C
10373FIL	M10A-B6LJ2-BP-C3	8ET8-6MONC	R230G02C
10374FIL	M10A-B6LJ2-EPR-SSP	8ET8-825	R230G02D
10374FIL	M10A-B6LJ2-SSP	8ET8-B	R230G02D
10377-10-8	M10A-B6LJ2-SSP-C3	8ET8-IIY	R230G02E
10377-16-16	M10A-B6LJ2-V-SSP	8ET8-M	R230G02E
10377-20-20	M10A-B6LJ-BP	8ET8-NNR	R24-02BK
10377-8-8	M10A-B6LJ-SSP	8ET8-TTZ	R24-02BK
10378-12-12-SM	M10A-B6LJ-SSP-C3	8F3MK4S	R24P
10378-16-16-SM	M10A-B6LJ-V-SSP	8F3MK4SS	R24S
10378-20-20-SM	M10A-B6XJ2-BP	8F3MP4SS	R24T
10378-24-24-SM	M10A-B6XJ2-SSP	8F3MT4SS	R24X
10378FIL	M10A-B6XJ2-V-SSP	8F3MXB	R25E07S1SN
10378FIL	M10A-B6XJ-BP	8F3MXS	R25E17S1SN
10379FIL	M10A-B6XJ-SSP	8F3MXSS	R25E17S1SV
10379FIL	M10A-B6XS2-SSP	8F3P4S	R25E25S1SN
1037FIL	M10A-B6XS2-V-SSP	8F3T4S	R25E25S1SV
1037FIL	M10A-C6L-1/3-B	8F42EDMLOS	R25E35A1SN
10380-00500	M10A-C6L-1/3-B-C3	8F42EDMLOSEPDM	R25E35S1SN
10380-00500	M10A-C6L-1/3-BN-B	8F42EDMLOSS	R25E35S1SNS07

10380-00800	M10A-C6L-1/3-BN-SS	8F42EDMLOSSVCAP	R25E35S1SV
10380-00800	M10A-C6L-1/3-BN-SS-C3	8F42EDMLOSV	R25E35S1UN
10380-00900	M10A-C6L-1/3-EPR-SS	8F42EDMXB	R25E42S1SN
10380-00900	M10A-C6L-1/3-SS	8F42EDMXS	R25M07S1SN
10380-01000	M10A-C6L-1/3-SS-C3	8F42EDMXSBP	R25M07S4SN
10380-01000	M10A-C6L-100-EPR-SS	8F42EDMXSS	R25M17L4SN
10380-01050	M10A-C6L-100-SS	8F42EDMXSV	R25M17S1SN
10380-01050	M10A-C6L-10-B	8F4OMXS	R25M17S4SN
10380-01420	M10A-C6L-10-BN-SS	8F4OMXSBP	R25M17S4SV
10380-01420	M10A-C6L-10-EPR-SS	8F4OMXSS	R25M25A4SN
10380-01520	M10A-C6L-10-SS	8F4OMXSV	R25M25S1SN
10380-01520	M10A-C6L-1-B	8F5890	R25M25S4SN
10380-02000	M10A-C6L-1-BN-B	8F5OMLO300703S	R25M25S4SV
10380-02000	M10A-C6L-1-BN-SS	8F5OMLOS	R25M35S1SN
10380-02400	M10A-C6L-1-EPR-B	8F5OMLOSBP	R25M35S4SN
10380-02400	M10A-C6L-1-EPR-SS	8F5OMLOSS	R25M35S4SV
10380-02500	M10A-C6L-1-SS	8F5OMLOSV	R25P
10380-02500	M10A-C6L-1-SS-C3	8F5OMXS	R25R07S4SN
10380-02700	M10A-C6L-25-EPR-SS	8F5OMXSS	R25R17S4SN
10380-02700	M10A-C6L-25-SS	8F63MXS	R25R25S4SN
10381-00900	M10A-C6L-50-BN-SS	8F63MXSS	R25R25S4SV
10381-00900	M10A-C6L-50-SS	8F63P4S	R25R35A4SN
10383FIL	M10A-C6L-5-B	8F642EDMLS	R25R35S4SN
10383FIL	M10A-C6L-5-BN-SS	8F642EDMLSS	R25R35S4SV
10384FIL	M10A-C6L-5-EPR-SS	8F642EDMXS	R25S
10384FIL	M10A-C6L-5-SS	8F642EDMXSBP	R25T
10386FIL	M10A-C6L-75-SS	8F642EDMXSS	R25X2
10386FIL	M10A-CO6L-10-V-SS	8F64OMXS	R25X2.5
10387FIL	M10A-CO6L-1-EPR-SS	8F64OMXSBP	R25X2.5-316
10387FIL	M10A-CO6L-1-V-SS	8F64OMXSS	R25X2.571
10388FIL	M10A-F6L-100-SS	8F6MXSS	R25X2.5CF
10388FIL	M10A-F6L-10-EPR-SS	8FA4K-316	R25X2.5ST52CF
10389FIL	M10A-F6L-10-SS	8FA4N-316	R25X271
10389FIL	M10A-F6L-1-EPR-SS	8FA4N-M	R25X2CF
10390FIL	M10A-F6L-1-SS	8FA4R-316	R25X3
10390FIL	M10A-F6L-250-SS	8FA6K-316	R25X3-316
10391FIL	M10A-F6L-50-BN-SS	8FA6N-316	R25X371
10391FIL	M10A-F6L-50-SS	8FA8GC-316	R25X3CF
10392FIL	M10A-F6L-5-EPR-SS	8FA8K-316	R25X3ST52CF
10392FIL	M10A-F6L-5-SS	8FA8N-316	R25X4
10393FIL	M10A-FT8-100-SS	8FA8N-6MO	R25X4.5CF
10393FIL	M10A-FT8-10-EPR-SS	8FA8N-HC	R25X4CF
10394FIL	M10A-FT8-10-SS	8FA8N-M	R25X4ST52CF
10394FIL	M10A-FT8-1-SS	8FA8N-TI	R26-02-000
103A-0326	M10A-FT8-50-SS	8FA8R-316	R26-02-000
103A-0411	M10A-FT8-5-SS	8F-B8LJ2-BN-SSP	R26-02-H00
103A-0425	M10A-HB4XK-SSP	8F-B8LJ2-BP	R26-02-H00
103A-0434	M10A-HB4XPKR-BN-SSP	8F-B8LJ2-BP-C3	R26-03-000
103A-0710	M10A-HB4XPKR-SSP	8F-B8LJ2-SSP	R26-03-000
103A-1133	M10A-LC12L-SS	8F-B8LJ2-SSP-C3	R26-03-GH0
103A-1443	M10A-MB6LPFA-SSP	8F-B8LJ2-V-SSP	R26-03-GH0
103A-1464	M10A-MB6LPFA-SSP-C3	8F-B8LJ2-V-SSP-C3	R26-04-000
103A-1581	M10A-PR6-EPRT-SS	8F-B8LJ-BN-SSP	R26-04-000

103A-2928	M10A-PR6-VT-B	8F-B8LJ-BP	R26-04-G00
103A-6782	M10A-PR6-VT-B-C3	8F-B8LJ-BP-C3	R26-04-G00
103A-6932	M10A-PR6-VT-SS	8F-B8LJ-EPR-SSP	R26-04-GH0
103A-6932-C	M10A-U12LB-G-SS-HT	8F-B8LJ-SSP	R26-04-GH0
103A-7106	M10A-U12LB-T-SS	8F-B8XJ2-BP	R26-04-H00
103A-8534	M10A-U12LR-G-SS	8F-B8XJ2-EPR-SSP	R26-04-H00
103B-1987	M10A-U12LR-G-SS-HT	8F-B8XJ2-SSP	R26-04-L00
103B-5894	M10A-U12LR-T-SS	8F-B8XJ2-V-SSP	R26-04-L00
103B-5894-C	M10A-V6LK-SS	8F-B8XJ-SSP	R260P
103B-6324	M10A-V6LN-B	8FBC6N-316	R260T
103B-8377	M10A-V6LN-B-C3	8FBC8N-316	R26-C2-000
103C-4290	M10A-V6LN-BN-SS-C3	8FBC8N-6MO	R26-C2-000
103C-5405	M10A-V6LN-SS	8FBC8N-M	R26-C3-000
103C-7236-C	M10A-V6LN-SS-C3	8FBC8N-NNR	R26-C3-000
103C-7251-C	M10A-V6LN-SS-OXY	8FBT4N-316	R26-C3-G00
103F-0145	M10A-V6LN-V-SS	8FBT4N-6MO	R26-C3-G00
103PC-8-06	M10A-V6LQ-SSP	8FBT4N-B	R26-C3-H00
103PX-10-08	M10A-V6LR-SS	8FBT6N-316	R26-C3-H00
103PX-4-03	M10A-V8LN-SS	8FBT6N-6MO	R26-C4-000
103PX-8-06	M10BCFXBP2	8FBT6N-B	R26-C4-000
10-4 TRBZ-SS	M10BCM6-316	8FBT6N-M	R26-C4-G00
10-4 TRLO-S	M10BR3/8D12.6CFXBP	8FBT8N-316	R26-C4-G00
10-4 TRTX-S	M10BUWS	8FBT8N-6MO	R26-C4-H00
1040 3031	M10BUWSS	8FBT8N-B	R26-C4-H00
1040/0142005	M10CU1-316	8FBT8N-M	R26-C4-L00
1040/0142012	M10CU2-316	8F-C8L-1/3-B	R26-C4-L00
1040/0142013	M10CU4-316	8F-C8L-1/3-BN-B	R26-C4-N00
1040/0142014	M10CU4-TTZ	8F-C8L-1/3-BN-SS	R26-C4-N00
1040/0142017	M10CU5-316	8F-C8L-1/3-BN-SS-C3	R26P
1040/0142019	M10CU6-316	8F-C8L-1/3-EPR-B	R26S
1040/0142050	M10CU6-B	8F-C8L-1/3-EPR-SS	R26T
1040/0142100	M10FA1/2N-316	8F-C8L-1/3-SS	R28-04-F000
1040/0142101	M10FA1/2N-6MO	8F-C8L-100-B	R28-04-F000
1040/0142103	M10FA1/2N-HC	8F-C8L-100-BN-SS	R28-06-F000
1040/0142151	M10FA1/2N-M	8F-C8L-100-SS	R28-06-F000
1040/0142152	M10FA1/2N-TI	8F-C8L-10-B	R28-C3-F000
1040/0142156	M10FA1/2R-316	8F-C8L-10-BN-B	R28-C3-F000
1040/0142201	M10FA1/4K-316	8F-C8L-10-BN-SS	R28-C3-F0G0
1040/0142205	M10FA1/4N-316	8F-C8L-10-EPR-B	R28-C3-F0G0
1040/0142228	M10FA1/4N-6MO	8F-C8L-10-EPR-SS	R28-C4-D000
1040/0142450	M10FA1/4N-HC	8F-C8L-10-SS	R28-C4-D000
1040/014T023	M10FA1/4N-M	8F-C8L-10-SS-C3	R28-C4-D0G0
1040/014T024	M10FA1/4N-TI	8F-C8L-1-B	R28-C4-D0G0
1040/0201310	M10FA3/8N-316	8F-C8L-1-B-C3	R28-C4-F000
1040/0201612	M10FA3/8N-6MO	8F-C8L-1-BN-B	R28-C4-F000
1040/0201630	M10FAGC1/2R-316	8F-C8L-1-BN-B-C3	R28-C4-F000-07
1040/0201631	M10FAGC1/2R-HC	8F-C8L-1-BN-SS	R28-C4-F000-07
1040/0201637	M10FAGC1/4R-B	8F-C8L-1-EPR-B	R28-C4-F0G0
1040/02021101-3	M10FAGC3/8R-316	8F-C8L-1-EPR-SS	R28-C4-F0G0
1040/0241220	M10FBC1/4N-316	8F-C8L-1-SS	R28-C4-G000
1040/0241524	M10FBT1/2N-316	8F-C8L-25-B	R28-C4-G000
1040/0241531	M10FBT1/2R-316	8F-C8L-25-BN-B	R28-C4-G0G0
1040/0241533	M10FBT1/4N-316	8F-C8L-25-BN-SS	R28-C4-G0G0

1040/0241534	M10FBT1/4N-6MO	8F-C8L-25-EPR-B	R28-C4-L000-55
1040/0241535	M10FEL1/2N-316	8F-C8L-25-EPR-SS	R28-C4-L000-55
1040/0241536	M10FEL1/4N-316	8F-C8L-25-SS	R28-C4-R000
1040/0241538	M10FEL3/8N-316	8F-C8L-50-B	R28-C4-R000
1040/0241618	M10FRT1/4N-316	8F-C8L-50-BN-SS	R28-C6-D0G0
1040/0241630	M10FSC1/2K-316	8F-C8L-50-SS	R28-C6-D0G0
1040/0241636	M10FSC1/2N-316	8F-C8L-5-B	R28-C6-F000
1040/0241700	M10FSC1/2N-6MO	8F-C8L-5-B-C3	R28-C6-F000
1040/024E210	M10FSC1/2N-B	8F-C8L-5-BN-B	R28-C6-G000
1040/024E261	M10FSC1/2N-IIY	8F-C8L-5-BN-SS	R28-C6-G000
1040/024E263	M10FSC1/2N-M	8F-C8L-5-EPR-B	R28-C6-G0G0
1040/024L000	M10FSC1/2N-NNR	8F-C8L-5-EPR-SS	R28-C6-G0G0
1040/025GS-04	M10FSC1/2N-TTZ	8F-C8L-5-SS	R28-C6-L000
1040/E3A2XCM4DG	M10FSC1/4K-316	8F-C8L-75-B	R28-C6-L000
1040/FIXED_FINGER	M10FSC1/4N-316	8F-C8L-75-EPR-B	R28-C6-L000-55
1040/HYDPUMPKIT	M10FSC1/4N-6MO	8F-C8L-75-SS	R28-C6-L000-55
1040/LMC0103	M10FSC1/4N-B	8F-CO8L-1/3-BN-SS	R28-C6-R000
1040/LS112MB14	M10FSC1/4N-M	8F-CO8L-1/3-EPR-SS	R28-C6-R000
1040/MC01	M10FSC1/4N-NNR	8F-CO8L-1/3-V-SS	R28-C6-W0G0
1040/MC2900	M10FSC1/4N-NNR-NC	8F-CO8L-10-BN-SS	R28-C6-W0G0
1040/MS874	M10FSC1/4N-TTZ	8F-CO8L-10-KZ-SS	R28X1.5
1040/MS928	M10FSC1/4R-316	8F-CO8L-10-V-SS	R28X1.571
1040/N17515201D5	M10FSC1/8K-316	8F-CO8L-10-V-SS-C3	R28X1.5CF
1040/S30/4	M10FSC1/8N-316	8F-CO8L-1-EPR-SS	R28X2
1040/T04.5/9/32	M10FSC3/8K-316	8F-CO8L-1-KZ-SS	R28X2.5
1040/T04/8/20	M10FSC3/8N-316	8F-CO8L-1-V-SS	R28X2.571
1040/T3/8/11220	M10FSC3/8N-6MO	8F-CO8L-5-BN-SS	R28X2.5CF
1040/VY2005	M10FSC3/8N-IIY	8F-CO8L-5-V-SS	R28X2-316
1040/XCMA110T20	M10FSC3/8N-NNR	8FEL12N-316	R28X271
1040/XS1M12DA21	M10FSC3/8R-316	8FEL4N-316	R28X2CF
1040-1408	M10GC1/2R-316	8FEL4N-6MO	R28X2ST52CF
10405FIL	M10GC1/2R-B	8FEL4N-B	R28X3
10405FIL	M10GC1/2R-M	8FEL4N-M	R28X3CF
104-0625062-2TC-100	M10GC1/4R-316	8FEL6N-316	R2B4S
104-0625062-2TC-25MT	M10GC1/4R-B	8FEL6N-6MO	R2B6S
1040-6826	M10GC3/4R-316	8FEL6N-B	R2B8S
1040-6873	M10GC3/8R-316	8FEL6N-M	R2B8S-BO
1040-6879	M10GC3/8R-B	8FEL8N-316	R3/4X0.095PHR
1040-7428	M10GC3/8R-M	8FEL8N-6MO	R3/4X0.109PHR
1040-7434	M10L87NMS	8FEL8N-825	R3/8X0.049PHR
1040-7865	M10L8NMS	8FEL8N-B	R3/8X0.049TP316/L
10407FIL	M10LBLKOELX	8FEL8N-M	R3/8X0.065PHR
10407FIL	M10LCFX	8FEL8N-NNR	R30-06-000
10408FIL	M10LCFXBP	8FF8-316	R30-06-000
10408FIL	M10LEODURX	8FF8-625	R30-08-000
10408FIL	M10LEODURXBP	8FF8-6MO	R30-08-000
10408FIL	M10LL71X	8FF8-6MO-NC	R30-08-H00
1040-9050	M10LLCFX	8FF8-825	R30-08-H00
1040-9050-C	M10LLMSX	8FF8-B	R30-08-HN0
1040-9841	M10LMSX	8FF8-HC	R30-08-HN0
1040EU400VG	M10LX	8F-F8L-100-B	R30-08-N00
1040H56 01	M10MA1/2K-316	8F-F8L-100-BN-SS	R30-08-N00
1040H56 02	M10MA1/2K-B	8F-F8L-100-EPR-SS	R30-0A-000

1040H56 03	M10MA1/2N-316	8F-F8L-100-SS	R30-0A-000
1040H56 04	M10MA1/2N-625	8F-F8L-10-B	R30C-0207-EPR
1040H60 01	M10MA1/2N-6MO	8F-F8L-10-BN-SS	R30C-0228-EPR
1040H60 02	M10MA1/2N-HC	8F-F8L-10-SS	R30C-0476
1040H60 03	M10MA1/2N-M	8F-F8L-1-B	R30-C6-000
1040H60 04	M10MA1/2N-TI	8F-F8L-1-SS	R30-C6-000
1040H62 01	M10MA1/2R-316	8F-F8L-250-BN-SS	R30-C6-H00
1040H62 02	M10MA1/2R-6MO	8F-F8L-450-SS	R30-C6-H00
1040H62 03	M10MA1/2R-ED-316	8F-F8L-50-B	R30-C6-N00
1040H62 04	M10MA1/4K-316	8F-F8L-50-BN-B	R30-C6-N00
1040H66 01	M10MA1/4K-6MO	8F-F8L-50-BN-SS	R30-C8-000
1040H66 02	M10MA1/4N-316	8F-F8L-50-EPR-B	R30-C8-000
1040H66 03	M10MA1/4N-625	8F-F8L-50-SS	R30-C8-05Q
1040H66 04	M10MA1/4N-6MO	8F-F8L-5-B	R30-C8-05Q
1040H69 01	M10MA1/4N-B	8F-F8L-5-BN-SS	R30-C8-H00
1040H69 02	M10MA1/4N-HC	8F-F8L-5-SS	R30-C8-H00
1040H69 03	M10MA1/4N-M	8FF8-M	R30-C8-HV0
1040H69 04	M10MA1/4R-316	8FF8-T	R30-C8-HV0
1040RENTFEE	M10MA1/4R-ED-316	8FF8-TI	R30-C8-N00
10410FIL	M10MA1/8N-316	8F-FT8-100-SS	R30-C8-N00
10410FIL	M10MA1/8R-B	8F-FT8-10-BN-SS	R30-CA-000
10414FIL	M10MA3/8K-316	8F-FT8-10-SS	R30-CA-000
10414FIL	M10MA3/8N-316	8F-FT8-1-EPR-SS	R30-CA-07Q
10415FIL	M10MA3/8N-6MO	8F-FT8-1-SS	R30-CA-07Q
10415FIL	M10MA3/8R-316	8F-FT8-250-SS	R30-CA-H00
10416FIL	M10MA3/8R-6MO	8F-FT8-450-BN-SS	R30-CA-H00
10416FIL	M10MBC1/2K-316	8F-FT8-450-SS	R30RVP
10417-02000	M10MBC1/2N-316	8F-FT8-50-BN-SS	R30SC1607
10417-02000	M10MBC1/4N-316	8F-FT8-50-SS	R30SC16071-HO2S
1041724220-01	M10MBC3/8N-316	8F-FT8-5-SS	R30SC16872
1041724230-01	M10MBC3/8N-B	8F-LC16L-SS	R30VM0
1041725220-01	M10MBT1/2N-316	8F-MB8LPFA-SSP	R30VM075
1041725230-01	M10MBT1/4K-316	8F-MB8LPFA-SSP-C3	R30VM075-CM
1041726220-01	M10MBT1/4N-316	8F-MB8XPFA-SSP	R30VM075-OM
1041726230-01	M10MBT1/4N-IIY	8FMK4S	R30VM085
1041726240-01	M10MBT1/4N-M	8FMK4SS	R30VM0-HCSOG
10418-00340	M10MBT3/8N-316	8F-MPNLB-T-SS	R30VM6-D1SCS
10418-00340	M10MRT1/2N-316	8FMTXB	R30VM7
10418-00600	M10MRT1/2N-6MO	8FMTXS	R30VM7-C1S
10418-00600	M10MRT1/2N-NNR	8FMTXSS	R30VM7-C2S
10418-01000	M10MRT1/4N-316	8FNMK4S	R30VM7-CH
10418-01000	M10MRT1/4N-6MO	8FNMK4SS	R30VM7-CM
10418-01800	M10MRT1/4N-IIY	8FNMKAS	R30VM7-CMTG
10418-01800	M10MRT1/4N-M	8FNMLS	R30VM7-O1S
10418-03200	M10MRT1/4R-316	8FNMLSS	R30VM7-OH
10418-03200	M10MRT1/8N-316	8FNMTXS	R30VM7-OM
1041824200-01	M10MRT3/8N-316	8FNMTXSBP	R30VM8
1041825200-01	M10MSC1/2BR-316	8FNMTXSS	R30VM872
1041826200-01	M10MSC1/2BR-NNR	8F-PR6-BNT-B	R30VM872-C1S
10419-00340	M10MSC1/2K-316	8F-PR6-VT-B	R30VM872-CM
10419-00340	M10MSC1/2K-6MO	8F-PR6-VT-SS	R30VM872-CMCSS
10419-00600	M10MSC1/2K-B	8F-PR6-VT-SS-C3	R30VM872-CSS
10419-00600	M10MSC1/2N-316	8FRT4N-316	R30VM872-D1SCSS

10419-00650	M10MSC1/2N-316-OXY	8FRT6N-316	R30VM872-O1S
10419-00650	M10MSC1/2N-6MO	8FRT8N-316	R30VM872-O1SSRS
10419-01000	M10MSC1/2N-6MO-NC	8FRT8N-6MO	R30VM872-OHP
10419-01000	M10MSC1/2N-825	8FRT8N-B	R30VM872-OM
10419-01350	M10MSC1/2N-B	8FRT8N-M	R30VM872-OMSRS
10419-01350	M10MSC1/2N-IIY	8FSC12N-316	R30VM872-SRS
10419-01610	M10MSC1/2N-M	8FSC12N-6MO	R30VM882
10419-01610	M10MSC1/2N-NNR	8FSC12N-IIY	R30VM8-CS
10419-03200	M10MSC1/2N-TTZ	8FSC16N-316	R30VM9001-SOG
10419-03200	M10MSC1/2R-316	8F-SC1GD-SS-WC	R30VM9002-SOG
1041FIL	M10MSC1/2R-6MO	8FSC4GC-316	R30VM907-HCSOG
1041FIL	M10MSC1/2R-825	8FSC4K-316	R30VRMM4812
10420FIL	M10MSC1/2R-B	8FSC4N-316	R30X2.5
10420FIL	M10MSC1/2R-ED-316	8FSC4N-6MO	R30X2.571
10421FIL	M10MSC1/2R-ED-6MO	8FSC4N-6MONC	R30X2.5CF
10421FIL	M10MSC1/2R-IIY	8FSC4N-B	R30X2CF
10422FIL	M10MSC1/2R-M	8FSC4N-IIY	R30X3
10422FIL	M10MSC1/4BR-316	8FSC4N-M	R30X3-316
10423FIL	M10MSC1/4BR-NNR	8FSC4N-NNR	R30X371
10423FIL	M10MSC1/4K-316	8FSC6GC-316	R30X3CF
10423FIL	M10MSC1/4K-6MO	8FSC6GC-6MO	R30X3ST52.4
10423FIL	M10MSC1/4K-B	8FSC6K-316	R30X3ST52CF
10424FIL	M10MSC1/4K-NNR	8FSC6K-M	R30X4
10424FIL	M10MSC1/4N-316	8FSC6N-316	R30X471
10425FIL	M10MSC1/4N-316-OXY	8FSC6N-6MO	R30X4CF
10425FIL	M10MSC1/4N-6MO	8FSC6N-M	R30X4ST52CF
10426FIL	M10MSC1/4N-825	8FSC6N-NNR	R30X5
10426FIL	M10MSC1/4N-B	8FSC8GC-316	R30X5CF
10427FIL	M10MSC1/4N-IIY	8FSC8GC-M	R30X5ST52CF
10427FIL	M10MSC1/4N-M	8FSC8GC-NNR	R31-06-000
10428FIL	M10MSC1/4N-NNR	8FSC8K-316	R31-06-000
10428FIL	M10MSC1/4N-TTZ	8FSC8N-316	R31-06-R00
10429FIL	M10MSC1/4R-316	8FSC8N-6MO	R31-06-R00
10429FIL	M10MSC1/4R-6MO	8FSC8N-6MO-NC	R31-08-000
10431FIL	M10MSC1/4R-B	8FSC8N-825	R31-08-000
10431FIL	M10MSC1/4R-ED-316	8FSC8N-B	R31-08-L00
10433FIL	M10MSC1/4R-IIY	8FSC8N-IIY	R31-08-L00
10433FIL	M10MSC1/4R-M	8FSC8N-M	R31-08-R00
10434FIL	M10MSC1/4R-NNR	8FSC8N-NNR	R31-08-R00
10434FIL	M10MSC1/8K-316	8FSC8N-TTZ	R31-0A-000
10435FIL	M10MSC1/8N-316	8F-SWB8L-RT-V-SS	R31-0A-000
10435FIL	M10MSC1/8N-6MO	8F-U12LB-G-SS	R31-0A-R00
10436FIL	M10MSC1/8N-B	8F-U12LB-G-SS-HT	R31-0A-R00
10436FIL	M10MSC1/8N-IIY	8F-U12LB-T-SS	R-312-CFX
10437FIL	M10MSC1/8N-M	8F-U12LR-G-SS	R-312MTFRCF
10437FIL	M10MSC1/8R-316	8F-U12LR-G-SS-HT	R-316-CFX
10438FIL	M10MSC1N-316	8F-U12LR-T-SS	R-316-SSX
10438FIL	M10MSC3/4K-316	8F-U12LR-T-SS-C3	R-316VBCF
10439FIL	M10MSC3/4N-316	8F-U16LB-G-SS	R-316WA-38X4.0S
10439FIL	M10MSC3/4N-6MO	8F-U16LB-T-SS	R31-C6-000
10441FIL	M10MSC3/4N-IIY	8F-U16LB-T-SS-C3	R31-C6-000
10441FIL	M10MSC3/4N-M	8F-U16LR-G-SS	R31-C6-L00
10442FIL	M10MSC3/4N-NNR	8F-U16LR-T-SS	R31-C6-L00

10442FIL	M10MSC3/4N-TTZ	8F-V12AN-B	R31-C6-R00
10443FIL	M10MSC3/8BR-316	8F-V12LK-SS	R31-C6-R00
10443FIL	M10MSC3/8K-316	8F-V12LN-B	R31-C6-RV0
10444FIL	M10MSC3/8K-B	8F-V12LN-B-C3	R31-C6-RV0
10444FIL	M10MSC3/8K-NNR	8F-V12LN-BN-SS	R31-C8-000
10445FIL	M10MSC3/8N-316	8F-V12LN-SS	R31-C8-000
10445FIL	M10MSC3/8N-6MO	8F-V12LN-SS-C3	R31-C8-L00
10446-6-6	M10MSC3/8N-B	8F-V12LN-V-B	R31-C8-L00
10448-6-6	M10MSC3/8N-IIY	8F-V12LR-B	R31-C8-LV0
10459FIL	M10MSC3/8N-M	8F-V12LR-B-C3	R31-C8-LV0
10459FIL	M10MSC3/8N-NNR	8F-V12LR-SS	R31-C8-R00
1045FIL	M10MSC3/8N-TTZ	8F-V12LR-SS-OXY	R31-C8-R00
1045FIL	M10MSC3/8R-316	8G3P4S	R31-CA-000
10460FIL	M10MSC3/8R-6MO	8G4MK4S	R31-CA-000
10460FIL	M10MSC3/8R-B	8G4MK4SS	R31-CA-L00
10461FIL	M10MSC3/8R-ED-316	8G4MXS	R31-CA-L00
10461FIL	M10MSC3/8R-NNR	8G4MXSS	R31-CA-R00
10462FIL	M10MSEL1/2K-316	8G63P4S	R31-CA-R00
10462FIL	M10MSEL1/2N-316	8GMTXSS	R-320-316RFCF
10468FIL	M10MSEL1/2N-6MO	8GR	R-320BFS
10468FIL	M10MSEL1/2N-B	8H6MK4S	R-320BFSS
1046FIL	M10MSEL1/2N-IIY	8H6MK4SS	R-320-CFX
1046FIL	M10MSEL1/2N-M	8HMK4S	R-320FB90CF
10470FIL	M10MSEL1/2N-NNR	8HMK4SS	R-320FTFRSS
10470FIL	M10MSEL1/2N-NNRNC	8HMLOS	R-320MTFR1CF
10471FIL	M10MSEL1/2N-TTZ	8HMLOSS	R-320MTFRCF
10471FIL	M10MSEL1/2R-316	8HMLOSSV	R-320-SSX
10472FIL	M10MSEL1/4K-316	8HMP4SS	R-320VBCF
10472FIL	M10MSEL1/4K-6MO	8HMTXB	R-320WA-38X4.0S
10479FIL	M10MSEL1/4K-B	8HMTXS	R-320WA-42.2X2.7S
10479FIL	M10MSEL1/4N-316	8HMTXSBP	R-320WA-42.2X3.6S
1047FIL	M10MSEL1/4N-6MO	8HMTXSBPNB	R-320WA-42.2X3.6SS
1047FIL	M10MSEL1/4N-6MO-NC	8HMTXSS	R-320WA-42.2X4.9S
10487FIL	M10MSEL1/4N-825	8HMX6SS	R-320WA-42X3.0S
10487FIL	M10MSEL1/4N-B	8HP46S	R-320WA-42X3.0SS
1048FIL	M10MSEL1/4N-IIY	8HP4S	R-320WA-42X4.0S
1048FIL	M10MSEL1/4N-M	8J6MK4S	R32281
104A-0326	M10MSEL1/4N-NNR	8J6MK4SS	R-324-316RFCF
104A-0430	M10MSEL1/4N-TTZ	8JMK4S	R-324-320RFSS
104A-0434	M10MSEL1/4R-316	8JMK4SS	R-324BFS
104A-1464	M10MSEL1/8K-316	8JMLOS	R-324BFSS
104A-1581	M10MSEL1/8N-316	8JMLOSS	R-324-CFX
104A-2271-C	M10MSEL1/8N-6MO	8JMLOSSV	R-324MTFRCF
104A-2928	M10MSEL1/8N-M	8JMTXS	R-324-SSX
104A-5183	M10MSEL3/4N-316	8JMTXSBP	R-324VBCF
104A-6835	M10MSEL3/8K-316	8JMTXSS	R-324WA-48.3X3.7S
104A-6938	M10MSEL3/8N-316	8K PH-SS	R-324WA-48.3X5.1S
104A-8960-C	M10MSEL3/8N-6MO	8K-8 RA-SS	R-324WA-48.3X5.1SS
104A-8961	M10MSEL3/8N-B	8K-8R RA-SS	R-324WA-48.3X7.1S
104A-8961-C	M10MSEL3/8N-IIY	8L302-202	R-324WA-50X3.0S
104B-1358-C	M10MSEL3/8N-M	8L302-202	R-324WA-50X3.0SS
104B-1439-C	M10MSEL3/8R-316	8L302-204	R-324WA-50X5.0S
104B-6411	M10MTC1/2N-316	8L302-204	R32E07S1SN

104C-0475	M10MTC3/8N-316	8L502-102	R32E07S1SV
104C-5405-C	M10MTC3/8N-6MO	8L502-102	R32E17S1SN
10-4F42EDMXS	M10MTC3/8N-IIY	8L502-202	R32E25L1SN
10-4F42EDMXSS	M10MVEL1/4N-316	8L502-202	R32E25S1SN
10-4F4OMXS	M10RR	8L502-204	R32E35S1SN
10-4K6OO4MXS	M10RUM6-316	8L502-204	R32E35S1SNS07
10-4K6PP4MXS	M10RUM6-6MO	8L502-214	R32M07S4SN
10-4R6O4MXS	M10RUM6-B	8L502-214	R32M17S4SN
10-4R6P4MLOS	M10RUM6-M	8L502-215	R32M25S4SN
10-4R6P4MXS	M10RUM6-NNR	8L502-215	R32M35S4SN
10-4TRMTXSS	M10RUM8-316	8L502-224	R32R25L1SN
1050/22900001801	M10RUM8-6MO	8L502-224	R32R35A4SN
1050/2311900800	M10RUM8-B	8L502-225	R-32VBCF
1050/2311901200	M10SCFX	8L502-225	R32X
1050/MANUAL	M10SEODURX	8L502-254	R-332-320RFCF
1050/RAIL04	M10SMSX	8L502-254	R-332-324RFCF
1050/RAIL10	M10SSTOSS71X	8L502-SK1	R-332-324RFSS
1050/RAIL12	M10SX	8L502-SK1	R-332BFS
1050/RAIL16	M10TUBCM10-316	8LEMQ1SS	R-332-CFX
1050/YY427959	M10TUC4-316	8LEMQ2CF	R-332FTFRSS
1050005-063M4-04003-00920	M10TUC6-316	8LEMQ2SS	R-332MTFR11/2CF
1050005-063M4-04003-00920	M10TURM12-316	8LM501-032	R-332MTFRCF
1050005-063M5-04003-00920	M10TURM12-6MO	8LM501-032	R-332MTFRSS
1050005-063M5-04003-00920	M10TURM12-M	8LOEMQ2CF	R-332-SSX
1050005-063M5-04003-00924	M10TURM3-316	8LPG-3	R-332TFSS
1050005-063M5-04003-00924	M10TURM6-316	8LPG-3-FR	R-332VBCF
1050005-063M5-04003-01123	M10TURM6-6MO	8LPG-4	R-332WA-60.3X5.5S
1050005-063M5-04003-01123	M10TURM6-IIY	8LPG-4-FR	R-332WA-60X3.0S
1050005-090M5-06003-01123	M10TURM6-NNR	8LPG-5	R-332WA-60X5.0S
1050005-090M5-06003-01123	M10TURM6-NNR-NC	8M12F82EDMLOS	R-340-324RFCF
1050005-090M6-06003-01123	M10TURM6-TTZ	8M14C87OMLOS	R-340-332RFCF
1050005-090M6-06003-01123	M10TURM8-316	8M14C87OMXS	R-340-CFX
1050010-045M4-03203-00930	M10X1-6H	8M14F82EDMLOS	R-340-SSX
1050010-045M4-03203-00930	M1100	8M14F82EDMXS	R-340VBCF
1050010-063M4-04005-00920	M110C-1	8M14F82EDMXSS	R-340WA-76.1X6.3S
1050010-063M4-04005-00920	M12 ALOK-316-SET	8M14F87OMLOS	R-348-332RFCF
1050010-063M5-04003-00920	M12 ALOK-6MO-SET	8M14F87OMXS	R-348-340RFCF
1050010-063M5-04003-00920	M12 ALOK-M-SET	8M14F8OMXS	R-348-CFX
1050010-063M5-04003-01120	M1200	8M14G87MLOS	R-348FB90CF
1050010-063M5-04003-01120	M12-1/4F8OHGS	8M14V8OMLOS	R-348-SSX
1050010-063M5-04003-01123	M1212W6B-XXS	8M16C87OMLOS	R-348VBCF
1050010-063M5-04003-01123	M1216KC9B	8M16C87OMXS	R-348WA-88.9X5.5S
1050010-075M5-06003-01121	M1216W6B-XXS	8M16C8OMLOS	R35-02CK
1050010-075M5-06003-01121	M127415	8M16C8OMXS	R35-02CK
1050010-075M5-06003-01123	M12742	8M16F5OHG8S	R35-02CP
1050010-075M5-06003-01123	M128W2B-XXS	8M16F682EDMLS	R35-02CP
1050010-090M5-06003-01123	M129W6B-XS	8M16F682EDMXS	R35-12
1050010-090M5-06003-01123	M12A-B6LJ2-SSP	8M16F687OMLS	R35-16
1050010-66BM5-38A02-06A21	M12A-B8LJ2-BN-SSP	8M16F687OMXS	R35-20
1050010-66BM5-38A02-06A21	M12A-B8LJ2-BP	8M16F68OMXS	R35-24
1050025-063M5-04003-00920	M12A-B8LJ2-EPR-SSP	8M16F82EDMLOS	R35-32
1050025-063M5-04003-00920	M12A-B8LJ2-SSP	8M16F82EDMXS	R35G01C
1050050-063M5-04003-01123	M12A-B8LJ2-SSP-C3	8M16F82EDMXSS	R35G01C

1050050-063M5-04003-01123	M12A-B8LJ2-V-SSP	8M16F87MXS	R35G02C
1050100-063M5-04003-01123	M12A-B8LJ-BP	8M16F87OMLOS	R35G02C
1050100-063M5-04003-01123	M12A-B8LJ-SSP	8M16F87OMXS	R35TC-12
105-0125031-NT-1000	M12A-B8LJ-SSP-C3	8M16F87OMXSS	R35TC-16
105-0125031-NT-2000	M12A-B8LJ-V-SSP	8M16F8OMXS	R35TC-20
105-0125031-NT-250MT	M12A-B8XJ2-SSP	8M16R87OMXS	R35TC-24
105-0125031-NT-3000	M12A-B8XJ2-SSP-C3	8M16S87OMXS	R35TC-32
1050-1408	M12A-B8XJ2-V-SSP	8M16V87OMXS	R35TC-40
105-0250031-NT-165	M12A-B8XJ-SSP	8M16V8OMXS	R35X2
105-0250031-NT-25MT	M12A-B8XJ-V-SSP	8M18C87OMLOS	R35X2.5
105-0250047-NT-328	M12A-C8L-1/3-B	8M18C87OMLOSV	R35X2.571
105-0250047-NTL-1000	M12A-C8L-1/3-BN-SS	8M18C87OMXS	R35X2.5CF
105-0250047-NTL-250MT	M12A-C8L-1/3-EPR-SS	8M18C87OMXSBP	R35X271
105-0250047-NTL-3000	M12A-C8L-1/3-EPR-SS-C3	8M18C87OMXSBPNB	R35X2CF
105-0250062-NTL-500	M12A-C8L-1/3-SS	8M18C87OMXSS	R35X3
105-0375062-NT-1000	M12A-C8L-1/3-SS-C3	8M18C8OMLOS	R35X371
105-0375062-NTL-1000	M12A-C8L-100-EPR-SS	8M18C8OMLOSEPDM	R35X3CF
105-0375062-NTL-2000	M12A-C8L-100-SS	8M18C8OMXS	R35X3ST52CF
105-0375062-NTL-250MT	M12A-C8L-10-B	8M18C8OMXSBPNB	R35X4CF
10504FIL	M12A-C8L-10-BN-SS	8M18F682EDMXS	R36-20066-0
10504FIL	M12A-C8L-10-EPR-B	8M18F687OMXS	R364-02C
105-0500062-NT-100	M12A-C8L-10-EPR-SS	8M18F82EDMLOS	R364-02C
105-0500062-NTL-1000	M12A-C8L-10-SS	8M18F82EDMLOSS	R-364-CFX
105-0500062-NTL-2000	M12A-C8L-1-B	8M18F82EDMLOSV	R374-01C
105-0500062-NTL-250MT	M12A-C8L-1-BN-SS	8M18F82EDMXS	R374-01C
10505FIL	M12A-C8L-1-EPR-SS	8M18F82EDMXSS	R374-01CP
10505FIL	M12A-C8L-1-SS	8M18F87MXS	R374-01CP
1050-6878	M12A-C8L-25-BN-SS	8M18F87OMLOS	R374G02C
1050-6878-C	M12A-C8L-25-EPR-B	8M18F87OMLOSCAP	R374G02C
10506FIL	M12A-C8L-25-SS	8M18F87OMXS	R38X2.571
10506FIL	M12A-C8L-50-B	8M18F87OMXSBP	R38X2.5CF
1050-7434	M12A-C8L-50-BN-SS	8M18F87OMXSS	R38X3
105-0750062-NTL-1000	M12A-C8L-50-EPR-SS	8M18F8OMXS	R38X3-316
105-0750062-NTL-250MT	M12A-C8L-50-SS	8M18F8OMXSS	R38X3CF
105-0750062-NTL-25MT	M12A-C8L-5-B	8M18F8OMXSV	R38X3ST52CF
105-0750062-NTL-500	M12A-C8L-5-BN-SS	8M18R87OMLOS	R38X4
1050-7590	M12A-C8L-5-BN-SS-OXY	8M18R8OMLOS	R38X4-316
1050-9447	M12A-C8L-5-EPR-B	8M18RHV82EDMLOS0.2BCF	R38X471
1050BASICLEASEFEE	M12A-C8L-5-EPR-SS	8M18RHV82EDMLOSCF	R38X4CF
1050BASICRENTFEE	M12A-C8L-5-SS	8M18S87OMLOS	R38X4ST52CF
1050EU400VBASIC	M12A-C8L-75-SS	8M18S8OMXS	R38X5
1050EU400VBASICG	M12A-CO8L-1/3-BN-SS	8M18V87OMLOS	R38X5-316
1050EU400VPRO	M12A-CO8L-1/3-EPR-SS	8M18V87OMXS	R38X5CF
1050EUDEM01/1105	M12A-CO8L-1/3-V-SS	8M18V8OMLOS	R38X5ST52CF
1050P04 00M02	M12A-CO8L-10-BN-SS	8M18V8OMXS	R38X6CF
1050P04 00M04	M12A-CO8L-10-EPR-SS	8M1SC12-316	R38X6ST52CF
1050P04 00M07	M12A-CO8L-10-V-SS	8M1SC6-316	R38X7CF
1050P04 00M12	M12A-CO8L-1-EPR-SS	8M1SC8-316	R39-08-F000
1050P06 00M02	M12A-CO8L-1-KZ-SS	8M1SC8-IIY	R39-08-F000
1050P06 00M04	M12A-CO8L-1-KZ-SS-C3	8-M20X1.5 FHC-SS	R39-08-F0G0
1050P06 00M07	M12A-CO8L-1-V-SS	8M22C87OMLOS	R39-08-F0G0
1050P08 00M02	M12A-CO8L-50-V-SS-C3	8M22C87OMXS	R39-C8-F000
1050PROLEASEFEE	M12A-CO8L-5-BN-SS	8M22C8OMLOS	R39-C8-F000

1050T04A01	M12A-CO8L-5-EPR-SS	8M22C8OMXS	R3B3S
1050T04P00	M12A-CO8L-5-V-SS	8M22F82EDMLOS	R3B6S
1050T04P12	M12A-F8L-100-BN-SS	8M22F82EDMLOSCAP	R3B8S
1050T04P13	M12A-F8L-100-EPR-SS	8M22F82EDMXS	R3BD3S
1050T04P14	M12A-F8L-100-SS	8M22F82EDMXSS	R3BD6S
1050T06 00	M12A-F8L-10-BN-SS	8M22F87OMLOS	R3BD8S
1050T06A01	M12A-F8L-10-EPR-SS	8M22F87OMLOSV	R3BMB10-1/4
1050T06P00	M12A-F8L-10-SS	8M22F87OMXS	R3BMB10-3/8
1050T06P12	M12A-F8L-1-EPR-SS	8M22F8OMXS	R3BMB6-1/4
1050T06P13	M12A-F8L-1-SS	8M22R87OMLOS	R3BMB6-1/8
1050T06P14	M12A-F8L-250-SS	8M26F82EDMLOS	R3BMB8-1/4
1050T08 00	M12A-F8L-50-BN-SS	8M27F87OMLOS	R3BPL4/6-1/4
1050T08A01	M12A-F8L-50-EPR-SS	8M2SC8-316	R3BPL4/6-1/8
1050T08P00	M12A-F8L-50-SS	8M2SC8-6MO	R40-0B-000
1050T08P12	M12A-F8L-5-BN-SS	8M5BT8-316	R40-0B-000
1050T08P13	M12A-F8L-5-EPR-SS	8M5RT8-316	R40-0C-000
1050T08P14	M12A-F8L-5-SS	8M5SEL8-316	R40-0C-000
1050T10A01	M12A-FT8-100-BN-SS	8M8F-B8LJ2-SSP	R40-0C-HN0
1050T10P00	M12A-FT8-100-EPR-SS	8M8F-C8L-1-SS	R40-0C-HN0
1050T10P12	M12A-FT8-100-SS	8MA12N-316	R40-CB-000
1050T10P13	M12A-FT8-10-SS	8MA2R-316	R40-CB-000
1050T10P14	M12A-FT8-1-BN-SS	8MA4K-316	R40-CB-01Q
1050T12A01	M12A-FT8-1-SS	8MA4N-316	R40-CB-01Q
1050T12P00	M12A-FT8-250-SS	8MA4N-625	R40-CB-G00
1050T12P12	M12A-FT8-450-SS	8MA4N-6MO	R40-CB-G00
1050T12P13	M12A-FT8-50-BN-SS	8MA4N-HC	R40-CB-H00
1050T12P14	M12A-FT8-50-SS	8MA4R-316	R40-CB-H00
1050US440V60HZBASIC	M12A-FT8-5-BN-SS	8MA4R-6MO	R40-CB-HN0
1050V08 00 04	M12A-FT8-5-EPR-SS	8MA4R-ED-316	R40-CB-HN0
1050V11 00 06	M12A-FT8-5-KZ-SS	8MA6K-316	R40-CB-N00
1050V13 00 07	M12A-FT8-5-KZ-SS-C3	8MA6N-316	R40-CB-N00
1050V14 00 08	M12A-FT8-5-SS	8MA6N-625	R40-CC-000
1050V16 00 10	M12A-HB4XK-SSP	8MA6N-6MO	R40-CC-000
1050V18 00 12	M12A-HB4XK-SSP-C3	8MA6N-HC	R40-CC-H00
1050V23 00 15	M12A-HB4XPKR-BN-SSP	8MA6R-316	R40-CC-H00
1050V26 00 19	M12A-HB4XPKR-SSP	8MA6R-ED-316	R40-CC-HN0
1050X04 00	M12A-MB8LPFA-SSP	8MA8K-316	R40-CC-HN0
1050X06 00	M12A-MB8LPFA-SSP-C3	8MA8K-6MO	R40-CC-N00
1050X06 04	M12A-PR6-BNT-SS	8MA8K-M	R40-CC-N00
1050X08 00	M12A-PR6-EPR-T-SS	8MA8N-316	R40E07S1SN
1050X08 00 55	M12A-PR6-EPRT-SS-C3	8MA8N-625	R40E07S1SV
1050X14 00 11	M12A-PR6-VT-B	8MA8N-6MO	R40E17S1SN
105-1000062-NTL-25MT	M12A-PR6-VT-B-C3	8MA8N-B	R40E25S1SN
105-1000062-NTL-500	M12A-PR6-VT-SS	8MA8N-HC	R40E35L1SN
1052FIL	M12A-PR6-VT-SS-C3	8MA8N-M	R40E35S1SN
1052FIL	M12A-SWB8L-RT-V-SS	8MA8N-TI	R40VM7-O2S
10539FIL	M12A-U12LB-G-SS	8MA8R-316	R40VM7-OMCS
10539FIL	M12A-U12LB-G-SS-HT	8MA8R-6MO	R40X
1053FIL	M12A-U12LB-G-SS-HT-C3	8MA8R-825	R41-0B-000
1053FIL	M12A-U12LR-G-SS	8MA8R-ED-316	R41-0B-000
10546-10-8	M12A-U12LR-G-SS-HT	8MA8R-ED-HC	R41-0B-R00
10546-6-6	M12A-U12LR-T-SS	8MA8R-HC	R41-0B-R00
10546-8-6	M12A-U12LR-T-SS-C3	8MA8R-M	R41-0C-000

10546-8-8	M12A-U16LB-T-SS	8M-B8LJ2-SSP	R41-0C-000
10548-10-8	M12A-U16LR-G-SS	8M-B8LJ-SSP	R41-0C-R00
10548-12-12	M12A-U16LR-T-SS	8M-B8LJ-SSP-C3	R41-0C-R00
10548-6-6	M12A-V8LK-B	8MBC4N-316	R41-0C-R0Q
10548-8-6	M12A-V8LK-SS	8MBC6N-316	R41-0C-R0Q
10548-8-8	M12A-V8LN-B	8MBC8N-316	R41-CB-000
1054EL-12	M12A-V8LN-B-C3	8MBC8N-6MO	R41-CB-000
1054EL-12	M12A-V8LN-BN-SS	8MBC8N-IIY	R41-CB-L00
1054FIL	M12A-V8LN-BN-SS-C3	8MBC8N-M	R41-CB-L00
1054FIL	M12A-V8LN-SS	8MBT6N-316	R41-CB-R00
10550FIL	M12A-V8LN-SS-C3	8MBT6N-M	R41-CB-R00
10550FIL	M12A-V8LN-V-SS	8MBT8N-316	R41-CB-V00
10553FIL	M12A-V8LR-EPR-SS	8MBT8N-6MO	R41-CB-V00
10553FIL	M12A-V8LR-SS	8MBT8N-B	R41-CC-000
10555-5-5	M12A-V8LR-SS-C3	8MBT8R-316	R41-CC-000
10555-6-4	M12BCM6-316	8M-BV8-SS	R41-CC-L00
10555-6-4E	M12BUWS	8M-BV8-SS-BVT	R41-CC-L00
1055FIL	M12BUWSS	8M-BV8-SS-BVT-T	R41-CC-R00
1055FIL	M12-C2-CK00	8M-BV8-SS-T	R41-CC-R00
10564FIL	M12-C2-CK00	8M-C8L-1/3-B	R41-CC-R0Q
10564FIL	M12-C2-CL00	8M-C8L-1/3-B-C3	R41-CC-R0Q
10568FIL	M12-C2-CL00	8M-C8L-1/3-BN-SS-C3	R42-10
10568FIL	M12-C2-CR00	8M-C8L-1/3-EPR-B	R42-12
10569FIL	M12-C2-CR00	8M-C8L-1/3-SS	R42-16
10569FIL	M12-C2-CS00	8M-C8L-100-B	R42-20
1056FIL	M12-C2-CS00	8M-C8L-100-SS	R42-24
1056FIL	M12-C3-CK00	8M-C8L-10-B	R42-32
10570FIL	M12-C3-CK00	8M-C8L-10-B-C3	R42ST-10
10570FIL	M12-C3-CR00	8M-C8L-10-BN-SS	R42ST-12
10571FIL	M12-C3-CR00	8M-C8L-10-EPR-SS	R42ST-16
10571FIL	M12CU4-316	8M-C8L-10-SS	R42ST-20
10589FIL	M12CU6-316	8M-C8L-1-B	R42ST-24
10589FIL	M12CU6-TTZ	8M-C8L-1-BN-B	R42ST-32
1058X-6-04	M12CU8-316	8M-C8L-1-BN-SS	R42TC-10
10591FIL	M12CU8-6MO	8M-C8L-1-EPR-B	R42TC-12
10591FIL	M12CU8-B	8M-C8L-1-EPR-SS	R42TC-16
10597FIL	M12CU8-M	8M-C8L-1-SS	R42TC-20
10597FIL	M12FA1/2N-316	8M-C8L-25-BN-SS	R42TC-24
1059FIL	M12FA1/2N-6MO	8M-C8L-25-EPR-SS	R42TC-32
1059FIL	M12FA1/2N-M	8M-C8L-25-SS	R42X2
105A-0326	M12FA1/2R-316	8M-C8L-25-SS-C3	R42X271
105A-0326-V	M12FA1/4K-316	8M-C8L-50-B	R42X2CF
105A-0439	M12FA1/4N-316	8M-C8L-50-B-C3	R42X3
105A-1464	M12FA1/4N-6MO	8M-C8L-50-BN-SS	R42X371
105A-2577	M12FA1/4N-B	8M-C8L-50-EPR-SS	R42X3CF
105A-6932	M12FA1/4N-M	8M-C8L-50-SS	R42X3ST52CF
105B-1387-C	M12FA1/4R-316	8M-C8L-5-B	R42X4
105B-1439-C	M12FA3/8N-316	8M-C8L-5-B-C3	R42X4CF
10-5TRMTXSS	M12FA3/8N-6MO	8M-C8L-5-BN-B	R42X4ST52CF
10-5TRTXS	M12FA3/8R-316	8M-C8L-5-BN-SS	R42X5ST52CF
10-6 C5OX-S	M12FAGC1/2R-316	8M-C8L-5-EPR-SS	R-432-CFX
10-6 CBZ-SS	M12FAGC1/4R-316	8M-C8L-5-SS	R-432-SSX
10-6 CTX-S	M12FBC1/2N-316	8M-C8L-75-B	R-432VBCF

10-6 F5OG5-S
10-6 F5OX-S
10-6 F6X-S
10-6 FBU-S
10-6 FBZ-SS
10-6 GBZ-SS
10-6 HBZ-SS
10-6 TRBU-S
10-6 TRLO-S
10-6 TRLO-S V0894
10-6 TRTX-S
10-6 VTX-S
1060-6826
1060800197-01
1060800227-01
10610FIL
10610FIL
10-6-10JMTXS
10619FIL
10619FIL
10620FIL
10620FIL
10621FIL
10621FIL
10622FIL
10622FIL
10626-12-12-SM
10626-16-16-SM
10626-20-20-SM
10626-24-24-SM
10626-32-32
10626-6-6BS
10626-6-6-SM
10628FIL
10628FIL
10637FIL
10637FIL
10639FIL
10639FIL
10642FIL
10642FIL
10643-10-10C
10643-10-10-SM
10643-10-6-SM
10643-10-8-SM
10643-12-10-SM
10643-12-12-SM
10643-12-16-SM
10643-12-8C-SM
10643-14-12-SM
10643-16-12-SM
10643-16-16C
10643-16-16-SM

M12FBC1/2N-6MO
M12FBC1/2N-IIY
M12FBC1/2N-M
M12FBC1/4N-316
M12FBC3/8N-316
M12FBC3/8N-M
M12FBT1/2N-316
M12FBT1/2N-6MO
M12FBT1/2N-M
M12FBT1/4N-316
M12FBT3/8N-316
M12FBT3/8N-6MO
M12FEL1/2N-316
M12FEL1/2N-6MO
M12FEL1/2N-IIY
M12FEL1/2N-M
M12FEL1/2N-NNR
M12FEL1/2R-316
M12FEL1/4N-316
M12FEL3/8N-316
M12FRT1/2N-316
M12FRT1/4N-316
M12FRT1/4N-825
M12FRT3/8N-316
M12FRT3/8N-IIY
M12FSC1/2K-316
M12FSC1/2N-316
M12FSC1/2N-6MO
M12FSC1/2N-B
M12FSC1/2N-IIY
M12FSC1/2N-M
M12FSC1/2N-M-NC
M12FSC1/2N-NNR
M12FSC1/2N-TTZ
M12FSC1/2R-316
M12FSC1/4K-316
M12FSC1/4N-316
M12FSC1/4N-6MO
M12FSC1/4N-825
M12FSC1/4N-IIY
M12FSC1/4N-M
M12FSC1/4N-NNR
M12FSC3/4N-316
M12FSC3/8K-316
M12FSC3/8K-M
M12FSC3/8N-316
M12FSC3/8N-6MO
M12FSC3/8N-B
M12FSC3/8N-M
M12FSC3/8N-NNR
M12GC1/2R-316
M12GC1/2R-316-OXY
M12GC1/2R-825

8M-C8L-75-SS
8M-C8L-75-SS-C3
8M-CO8L-1/3-EPR-SS
8M-CO8L-1/3-EPR-SS-C3
8M-CO8L-1/3-V-SS
8M-CO8L-10-V-SS
8M-CO8L-1-BN-SS
8M-CO8L-1-V-SS
8M-CO8L-25-EPR-SS
8M-CO8L-5-V-SS
8M-FT8-10-BN-SS
8M-FT8-10-SS
8M-FT8-1-SS
8M-FT8-50-SS
8MP7-MPCBL-5-SS
8MP7-MPCL-5-V-SS
8MP7-MPNLB-T-SS
8M-PG4L-SS
8M-PR6-VT-SS
8MRT6N-316
8MRT8N-316
8MRT8N-6MO
8MRT8N-B
8MRT8N-M
8MRT8N-NNR
8MSC12K-316
8MSC12K-6MO
8MSC12K-TTZ
8MSC12N-316
8MSC12N-6MO
8MSC12N-6MONC
8MSC12N-825
8MSC12N-B
8MSC12N-IIY
8MSC12N-M
8MSC12N-NNR
8MSC12N-TTZ
8MSC12R-316
8MSC16N-316
8MSC16N-6MO
8MSC16N-M
8MSC16N-NNR
8MSC16R-316
8MSC2N-316
8MSC2N-6MO
8MSC2N-B
8MSC2N-IIY
8MSC4K-316
8MSC4K-B
8MSC4K-TTZ
8MSC4N-316
8MSC4N-316L
8MSC4N-6MO

R-432WA-60.3X8.7S
R43CB16
R43CKO16
R44.5X2.671
R-440BFSS
R-440-CFX
R-440-SSX
R-440VBCF
R-440WA-80X10.0S
R-448BFSS
R-448-CFX
R-448-SSX
R-448VBCF
R-448WA-80X10.0S
R-448WA-88.9X11.1SS
R-448WA-97X12.0S
R45P
R45S
R45T
R4603AK/BC6B0
R4603AK/BC6B0
R-464BFS
R-464-CFX
R-464VBCF
R-464WA-115X15.0S
R48X
R4R03-53111B1135
R4R03-56332B1
R4R03-56532P2G0RB1
R4R03-59111P2G0RB5
R4R03-593P1PM4MAB1
R4R06-0G331B1
R4R06-56512B1
R4R06-59111P1G0QB1
R4R06-59311P2G0QB5
R4R06-593P1PM4MAB1
R4R06-59531P2G0RB1
R4R06-59532B1
R4R06-5D512P2G0RB1
R4R10-59531P2G0RB1
R4RPIXX-00311B1BSP
R4RPIXX-00531B1NPT085
R4S03-53111A1P07
R4S03-5331109G0QA1
R4S06-0053111G0QA1
R4S06-59111A1
R4S06-59332A1
R4S10-5D512A1165
R4U03-5311109G0QA1
R4U03-53C10A1
R4U03-59130A1
R4U06-5311009G0QA1
R4U06-5311011G0QA1

10643-20-16-SM	M12GC1/2R-B	8MSC4N-6MONC	R4U06-5311011W30A1
10643-4-4C	M12GC1/2R-M	8MSC4N-825	R4U06-53312A1
10643-6-6C-SM	M12GC1/4R-316	8MSC4N-B	R4U06-5333010G0QA1
10643-6-6-SM	M12GC1/4R-825	8MSC4N-IIY	R4U06-5351011W30A1
10643-8-6-SM	M12GC1/4R-B	8MSC4N-M	R4U06-53A1109G0QA1
10643-8-8-SM	M12GC3/4R-316	8MSC4N-NNR	R4U06-59110A1
10643FIL	M12GC3/8R-316	8MSC4N-TTZ	R4U10-5351011G0QA1
10643FIL	M12GC3/8R-6MO	8MSC4R-316	R4U10-53A41A1
10644FIL	M12L8NMS	8MSC4R-6MO	R4V03-5311009G0QA5
10644FIL	M12LBLKOELX	8MSC4R-ED-316	R4V03-53111P2G0RA5
10645FIL	M12LCFVOLX	8MSC4R-IIY	R4V03-53132A1
10645FIL	M12LCFX	8MSC4R-TTZ	R4V03-531P0PM10VA5
10646-12-10	M12LCFXBP	8MSC6K-316	R4V03-531P0PN4MAA1
10646-12-12	M12LEODURX	8MSC6N-316	R4V03-5331009G0QA1031P17
10646-12-16	M12LEODURXBP	8MSC6N-316-OXY	R4V03-5331009G0QA1P17
10646-12-8	M12LL71X	8MSC6N-6MO	R4V03-5331011W31A1P17
10646-14-12	M12LLCFX	8MSC6N-B	R4V03-53310P2G0QA1
10646-16-12	M12LLMSX	8MSC6N-IIY	R4V03-53311A1P17
10646-16-16	M12LMSX	8MSC6N-M	R4V03-5331A11G0QA1005
10646-16-20	M12LX	8MSC6N-NNR	R4V03-53332P2G0RA1
10646-20-16	M12LZNFE3TX	8MSC6N-TTZ	R4V03-5334009G0QA1031
10646-20-20	M12M1SC3-316	8MSC6R-316	R4V03-53510P2G0SA1
10646-6-4	M12MA1/2K-316	8MSC6R-6MO	R4V03-53512P1G0QA1
10646-6-5	M12MA1/2K-TI	8MSC6R-ED-316	R4V03-53512PAG0QA1
10646-6-6	M12MA1/2N-316	8MSC8BR-316	R4V03-53530A1104
10646-6-8	M12MA1/2N-316-OXY	8MSC8K-316	R4V03-53531P1G0QA1
10646FIL	M12MA1/2N-316-Z6	8MSC8K-6MO	R4V03-5353209G0QA1
10646FIL	M12MA1/2N-625	8MSC8K-B	R4V03-53541P2G0RA1
10647FIL	M12MA1/2N-6MO	8MSC8K-M	R4V03-535P0PM4MAA1P25
10647FIL	M12MA1/2N-6MO-NC	8MSC8N 3.0MMOR-316	R4V03-535P1PM10VA1
10648-12-10	M12MA1/2N-HC	8MSC8N-316	R4V03-535W0A1P17
10648-12-12	M12MA1/2N-M	8MSC8N-316L	R4V03-535W0A1P20
10648-12-12C	M12MA1/2N-TI	8MSC8N-6MO	R4V03-535W0A1P25
10648-12-16	M12MA1/2R-316	8MSC8N-825	R4V03-56130P2G0RA1
10648-12-8	M12MA1/2R-6MO	8MSC8N-B	R4V03-56312A5
10648-14-12	M12MA1/2R-ED-316	8MSC8N-IIY	R4V03-56312P1G0QA1
10648-16-12	M12MA1/2R-ED-6MO	8MSC8N-IIYNC	R4V03-5651009G0QA1059
10648-16-16	M12MA1/2R-M	8MSC8N-M	R4V03-56510P2G0QA1
10648-16-16C	M12MA1/4K-316	8MSC8N-M-NC	R4V03-56510P2G0RA1
10648-16-20	M12MA1/4N-316	8MSC8N-NNR	R4V03-5933FA1
10648-20-16	M12MA1/4N-625	8MSC8N-TTZ	R4V06-00331A5
10648-20-20	M12MA1/4N-6MO	8MSC8R-316	R4V06-00511A1210
10648-24-20	M12MA1/4N-HC	8MSC8R-6MO	R4V06-0G53GA1
10648-24-24	M12MA1/4N-M	8MSC8R-825	R4V06-53111P2G0RA5
10648-32-32	M12MA1/4N-TI	8MSC8R-ED-316	R4V06-5331109G0QA1
10648-6-4	M12MA1/4R-316	8MSC8R-M	R4V06-5331109G0QA1P17
10648-6-4C	M12MA1/4R-6MO-NC	8MSC8R-NNR	R4V06-53311P1G0QA1029
10648-6-5	M12MA1/4R-ED-316	8MSEL12N-316	R4V06-53330A1P19
10648-6-6	M12MA1/4R-HC	8MSEL12N-6MO	R4V06-53330P2G0RA1
10648-6-6C	M12MA3/4N-316	8MSEL12N-B	R4V06-53340A1
10648-6-8	M12MA3/4R-316	8MSEL16N-316	R4V06-5351009G0QA1031P25
10649FIL	M12MA3/8K-316	8MSEL2N-316	R4V06-5351009G0QA1109
10649FIL	M12MA3/8K-M	8MSEL4K-316	R4V06-5351011GAGA1P25

1064FIL	M12MA3/8N-316	8MSEL4N-316	R4V06-53510A1P25
1064FIL	M12MA3/8N-625	8MSEL4N-6MO	R4V06-5351111G0QA1
10651FIL	M12MA3/8N-6MO	8MSEL4N-6MONC	R4V06-5353009G0QA5031
10651FIL	M12MA3/8N-M	8MSEL4N-B	R4V06-53530P2G0RA1
10654-4-4	M12MA3/8R-316	8MSEL4N-IIY	R4V06-53531P2G0QA1210
10655-10-8	M12MA3/8R-6MO	8MSEL4N-M	R4V06-535P1PM10VA1
10655-10-8C	M12MA3/8R-ED-316	8MSEL4N-NNR	R4V06-535W0A1P16
10655-12-10	M12MA3/8R-M	8MSEL4N-TTZ	R4V06-535W0A1P23
10655-12-12	M12MBC1/2K-316	8MSEL4R-316	R4V06-535W0A1P25
10655-12-12C	M12MBC1/2N-316	8MSEL4R-316	R4V06-535W0A1P30
10655-12-8	M12MBC1/2N-IIY	8MSEL6K-316	R4V06-5611011G0QA1
10655-16-16	M12MBC1/2N-M	8MSEL6K-M	R4V06-5613009G0QA1
10655-4-3C	M12MBC1/2R-316	8MSEL6K-NNR	R4V06-5613009G0QA1P05
10655-4-4	M12MBC1/4N-316	8MSEL6N-316	R4V06-56130P2G0RA1
10655-4-4C	M12MBC3/8N-316	8MSEL6N-6MO	R4V06-56310P2G0QA1
10655-5-3	M12MBC3/8N-IIY	8MSEL6N-B	R4V06-5634009G0QA1
10655-5-4	M12MBT1/2N-316	8MSEL6N-IIY	R4V06-56510P2G0QA1
10655-5-4C	M12MBT1/2N-M	8MSEL6R-316	R4V06-56512P2G0RA1
10655-5-5	M12MBT1/2N-NNR	8MSEL8K-316	R4V06-5653011G0QA1
10655-6-4	M12MBT1/4N-316	8MSEL8K-6MO	R4V06-57531P2G0RA1
10655-6-4C	M12MBT1/4N-6MO	8MSEL8K-NNR	R4V06-59132P1G0QA1
10655-6-5	M12MBT3/8N-316	8MSEL8N-316	R4V06-5D130A1003
10655-6-5C	M12MRT1/2N-316	8MSEL8N-6MO	R4V06-5D312A5
10655-6-6	M12MRT1/2N-6MO	8MSEL8N-6MO-NC	R4V06-5D33209G0QA1
10655-6-6C	M12MRT1/2N-B	8MSEL8N-B	R4V06-5D53009G0QA1031
10655-6-8	M12MRT1/2N-IIY	8MSEL8N-IIY	R4V06-5D5W0A1P21
10655-8-5	M12MRT1/2N-M	8MSEL8N-M	R4V06-5D5W0A1P25
10655-8-6	M12MRT1/4N-316	8MSEL8N-NNR	R4V06M533P1PM10VA1P17
10655-8-6C	M12MRT3/8N-316	8MSEL8N-TTZ	R4V10-53310P2G0RA1
10655-8-8	M12MRT3/8N-825	8MSEL8R-316	R4V10-5331209G0QA1
10655-8-8C	M12MRT3/8N-M	8MTC12N-316	R4V10-53340P1G0QA1
10656-10-8	M12MSC1/2BR-316	8MTC12N-6MO	R4V10-53342P1G0QA1
10656-4-3	M12MSC1/2BR-316-OXY	8MTC12N-M	R4V10-533P0PN4MAA5
10656-4-4	M12MSC1/2BR-825	8MTC8N-316	R4V10-5353011W52A1
10656-5-4	M12MSC1/2K-316	8MTC8N-M	R4V10-535P0PN4MAA5
10656-5-5	M12MSC1/2K-6MO	8M-V8LN-B	R4V10-535W0A1P13
10656-6-4	M12MSC1/2K-B	8M-V8LN-SS	R4V10-535W0A1P15
10656-6-5	M12MSC1/2K-M	8M-V8LN-SS-C3	R4V10-535W0A1P19
10656-6-6	M12MSC1/2K-NNR	8M-V8LR-SS	R4V10-535W0A1P32
10656-8-6	M12MSC1/2K-TTZ	8MVEL6N-316	R4V10-5391009G0QA1
10656-8-8	M12MSC1/2N-316	8MVEL8N-316	R4V10-5393109G0QA1
10656FIL	M12MSC1/2N-6MO	8NU8-316	R4V10-5911211G0QA1043
10656FIL	M12MSC1/2N-6MO-NC	8NU8-625	R4V10-59132A1
10658-10-8	M12MSC1/2N-825	8NU8-6MO	R4V10-5A110A5
10658-12-10	M12MSC1/2N-B	8NU8-B	R4V10-5A130A5
10658-12-12	M12MSC1/2N-IIY	8NU8-HC	R4V10-5D11009G0QA1
10658-12-12C	M12MSC1/2N-IIY-NC	8NU8-M	R4V10-5D11009W31A1
10658-12-8	M12MSC1/2N-M	8NU8-TI	R4V10-5D11209G0QA1
10658-16-12	M12MSC1/2N-NNR	8NUK8-316	R4V10-5D13011G0QA1
10658-16-16	M12MSC1/2N-TTZ	8P2TU8-316	R4V10-5D13209G0QA1
10658-16-16C	M12MSC1/2R-316	8P5ONMSS	R4V10-5D13209GAGA1
10658-4-2-SM	M12MSC1/2R-6MO	8PAT8	R4V10-5D310A5
10658-4-4	M12MSC1/2R-6MO-NC	8PC12-316	R4V10-5D312A5

10658-4-4C	M12MSC1/2R-B	8PC8-316	R4V10-5D51009GAGA1
10658-6-4	M12MSC1/2R-ED-316	8PC8-6MO	R4V10-5D51011G0QA1
10658-6-6	M12MSC1/2R-IIY	8PC8-B	R4V10-5D510P2G0QA1
10658-8-6	M12MSC1/2R-M	8PC8-HC	R4V10-5D512P2G0QA5XG160
10658-8-8	M12MSC1/2R-NNR	8PFMQ1CF	R4V10-5D532P1G0QA1
10658-8-8C	M12MSC1/2R-TTZ	8PFMQ2CF	R4V10-5D5W0A1P20
10658FIL	M12MSC1/4BR-316	8PMQ1CF	R4VPIXX-00310A1
10658FIL	M12MSC1/4BR-6MO	8PMQ2CF	R4VPIXX-00512A1NPT
10658H-12-12	M12MSC1/4BR-825	8PNMK4S	R4VPIXX-00512A5BSP
10658H-16-16	M12MSC1/4K-316	8PNMK4SS	R4VPIXX-0P5P0PM10VA1
10659FIL	M12MSC1/4K-6MO	8PNMKAS	R5/8X0.083PHR
10659FIL	M12MSC1/4K-B	8PNMLOS	R50E07L1SN
1065FIL	M12MSC1/4K-M	8PNMLOSS	R50E07S1SN
1065FIL	M12MSC1/4K-NNR	8PNMTXS	R50E17S1SN
10663FIL	M12MSC1/4N-316	8PNMTXSS	R50E25S1SNS07
10663FIL	M12MSC1/4N-316-OXY	8PSW-SWB12L-RT-T-SS	R50E35S1SN
10664FIL	M12MSC1/4N-6MO	8R PH-SS	R50TC-10
10664FIL	M12MSC1/4N-825	8R-4 RA-SS	R50TC-12
10665FIL	M12MSC1/4N-B	8R-4 RA-SS	R50TC-16-SP4
10665FIL	M12MSC1/4N-IIY	8R4OMLOS	R50TC-20
10670-10-10-SM	M12MSC1/4N-M	8R4OMXS	R50X3-316
10670-10-6-SM	M12MSC1/4N-MNC	8R5OMXS	R50X3CF
10670-10-8-SM	M12MSC1/4N-NNR	8R6MK4S	R50X5-316
10670-12-10-SM	M12MSC1/4N-TTZ	8R6MK4SS	R50X5ST52CF
10670-12-12C-SM	M12MSC1/4R-316	8R6MLOS	R50X6
10670-12-12-SM	M12MSC1/4R-6MO	8R6MLOSBP	R50X6-316
10670-12-16-SM	M12MSC1/4R-6MO-NC	8R6MLOSS	R50X6ST52CF
10670-12-8-SM	M12MSC1/4R-825	8R6MXS	R50X8ST52CF
10670-14-12-SM	M12MSC1/4R-B	8R6MXSBP	R52P
10670-16-12-SM	M12MSC1/4R-ED-316	8R6MXSBPNB	R52T
10670-16-16C-SM	M12MSC1/4R-ED-6MO	8R-8 RA-HC	R56X8.5ST52
10670-16-16-SM	M12MSC1/4R-IIY	8R-8 RA-M	R58060-02
10670-20-16-SM	M12MSC1/4R-M	8R-8 RA-SS	R58080-10
10670-20-20C-SM	M12MSC1/4R-NNR	8RHDMLOSCF	R58080-30
10670-6-6C-SM	M12MSC1/8N-316	8RHDMTXS2BCF	R5D08-6951201G0QA1152
10670-6-6-SM	M12MSC1/8N-B	8RHDMTXS3BCF	R5D10-6951201G0QA1152
10670-8-10-SM	M12MSC1/8R-316	8RHDMTXSCF	R5D12-6951201G0QA1XG139
10670-8-6-SM	M12MSC1N-316	8RHDMTXSS	R5P06-52532A1
10670-8-8-SM	M12MSC1R-316	8RHV42EDMLOSCF	R5P08-52532A1
10671-10-10	M12MSC3/4BR-316	8RHV42EDMXSCF	R5P08-5A335A1
10671-10-12-SM	M12MSC3/4K-316	8RHV5OMXSCF	R5R06-58336A1
10671-10-8-SM	M12MSC3/4N-316	8RHZ42EDMLOS0.2BCF	R5RVP
10671-12-10-SM	M12MSC3/4N-6MO	8RHZ42EDMLOSCF	R5RVS
10671-12-12-SM	M12MSC3/4N-825	8RHZ42EDMXSCF	R5S10-49116A1
10671-12-16	M12MSC3/4N-B	8RHZ5OMXSCF	R5U06-59C1509G0QA1
10671-14-12	M12MSC3/4N-IIY	8RU2-316	R5U08-59I1509G0QA1
10671-16-12-SM	M12MSC3/4N-M	8RU2-6MO	R5U08-5A31509G0QA1
10671-16-16-SM	M12MSC3/4N-NNR	8RU2-TTZ	R5U10-4111509G0QA1
10671-20-16-SM	M12MSC3/4N-TTZ	8RU4-316	R5U10-4333509G0QA1
10671-20-20	M12MSC3/4R-316	8RU4-6MO	R5U10-4931511G0QA1
10671-24-20-SM	M12MSC3/8BR-316	8RU4-825	R5V06-5713609G0QA1
10671-24-24	M12MSC3/8BR-825	8RU4-B	R5V06-5753609G0QA1
10671-32-32	M12MSC3/8BR-NNR	8RU4-IIY	R5V06-5913209G0QA1152

10671-6-6-SM	M12MSC3/8K-316	8RU4-M	R5V06-59132A1152
10671-8-6	M12MSC3/8K-B	8RU4-NNR	R5V06-5933609G0QA1223
10671-8-8-SM	M12MSC3/8K-IIY	8RU4-TTZ	R5V06-59336P2G0RA1
10671FIL	M12MSC3/8K-M	8RU6-316	R5V06-5951209G0QA1152
10671FIL	M12MSC3/8N-316	8RU6-6MO	R5V06-6931209G0QA1
10672FIL	M12MSC3/8N-6MO	8RU6-825	R5V06-69312P2G0RA1
10672FIL	M12MSC3/8N-6MO-NC	8RU6-B	R5V06-6951209G0QA1210
10673-12-12-SM	M12MSC3/8N-825	8RU6-IIY	R5V06-69512A1
10673-16-12	M12MSC3/8N-B	8RU6-M	R5V06-69512A1152
10673-16-16-SM	M12MSC3/8N-IIY	8RU6-NNR	R5V06-6953209G0QA1008
10673-16-20-SM	M12MSC3/8N-M	8RU6-TTZ	R5V06-69536A1
10673-20-16	M12MSC3/8N-NNR	8S3MXS	R5V06-69536A1152
10673-20-20-SM	M12MSC3/8N-TTZ	8S4OMLOS	R5V06M5933609G0QA1223
10673-24-20-SM	M12MSC3/8R-316	8S4OMXS	R5V08-57516P2G0RA1
10673-24-24-SM	M12MSC3/8R-316-OXY	8S4OMXSS	R5V08-5913209G0QA1223
10673-32-32-SM	M12MSC3/8R-6MO	8S5OMXS	R5V08-59312P2G0RA1
10674FIL	M12MSC3/8R-6MO-NC	8S6MK4S	R5V08-5933209G0QA1
10674FIL	M12MSC3/8R-ED-316	8S6MLOS	R5V08-5933209G0QA1059
10677-10-10	M12MSC3/8R-M	8S6MLOSS	R5V08-59332P2G0RA1
10677-10-8	M12MSC3/8R-NNR	8S6MXS	R5V08-59336P2G0RA1
10677-12-12	M12MSC3/8R-TTZ	8S6MXSBP	R5V08-59336P2G0RA1152
10677-12-16	M12MSCM12X1-316	8S6MXSBPNB	R5V08-5951209G0QA1152
10677-16-12	M12MSCM14X1.5-316	8S6MXSS	R5V08-5953609G0QA1
10677-16-16	M12MSCM22X1.5-316	8SC8-316	R5V08-69332A1152
10677-20-16	M12MSEL1/2K-316	8SC8-316L	R5V08-6953209G0QA1
10677-20-20	M12MSEL1/2K-M	8SC8-6MO	R5V08-6953209G0QA1008
10677-8-8	M12MSEL1/2K-TTZ	8SC8-6MONC	R5V08-6953609G0QA1223
10678-12-12-SM	M12MSEL1/2N-316	8SC8-825	R5V08-69536A1
10678-16-12-SM	M12MSEL1/2N-6MO	8SC8-B	R5V08I69532A1
10678-16-16-SM	M12MSEL1/2N-B	8SC8-IIY	R5V10-41132A1
10678-16-20-SM	M12MSEL1/2N-IIY	8SC8-M	R5V10-4331209G0QA1008
10678-20-20-SM	M12MSEL1/2N-M	8SC8-NNR	R5V10-4911209G0QA1152
10678-24-24-SM	M12MSEL1/2N-NNR	8SC8-TTZ	R5V10-49132A1267
10678FIL	M12MSEL1/2N-TTZ	8TA-PG4L-SS	R5V10-49132P2G0RA1
10678FIL	M12MSEL1/2R-316	8TT4MLS	R5V10-4913609G0QA1
10679FIL	M12MSEL1/4K-316	8TT4MXS	R5V10-4931209G0QA1223
10679FIL	M12MSEL1/4N-316	8TT4MXSS	R5V10-49312P2G0RA1152
10680FIL	M12MSEL1/4N-6MO	8TT8MLS	R5V10-49332A1171
10680FIL	M12MSEL1/4N-B	8TTP4MLS	R5V10-49332A5166P21
10686FIL	M12MSEL1/4N-IIY	8TTP4MXS	R5V10-4933609G0QA1152
10686FIL	M12MSEL1/4N-M	8TUBC8-316	R5V10-4933609G0QA1223
10687FIL	M12MSEL1/4N-NNR	8TUCM10-316	R5V10-49336P2G0RA1152
10687FIL	M12MSEL1/4N-TTZ	8TUCM10-M	R5V10-49512P2G0RA1
10688FIL	M12MSEL1/4R-316	8TUCM12-316	R5V10-49536P2G0RA1152
10688FIL	M12MSEL3/4K-316	8TUCM6-316	R5V10-495P2PM4MAA1
1068FIL	M12MSEL3/4N-316	8TUCM6-M	R5V10-6931209G0QA1223
1068FIL	M12MSEL3/4N-6MO	8TUCM8-316	R5V10-69312A1152
1068X-4-04	M12MSEL3/4N-M	8TUR12-316	R5V10-6933209G0QA1152
1068X-4-04C	M12MSEL3/4R-316	8TUR2-316	R5V10-6933609G0QA1223
1068X-5-04	M12MSEL3/8K-316	8TUR4-316	R5V10-69336P2G0RA1
1068X-6-04	M12MSEL3/8K-B	8TUR4-6MO	R5V10-6951209G0QA1070
1068X-6-04C	M12MSEL3/8K-M	8TUR4-825	R5V10-6951211G0QA1
1068X-6-05	M12MSEL3/8N-316	8TUR4-M	R5V10-6953209G0QA1008

1068X-8-06
1068X-8-08C
10690FIL
10690FIL
10691FIL
10691FIL
10691N-10-10
10691N-12-12
10691N-12-12C
10691N-16-16C
10691N-4-4
10691N-4-4C
10691N-5-5
10691N-5-5C
10691N-6-6
10691N-6-6C
10691N-8-8
10691N-8-8C
10693N-24-24
10693N-8-8
10697FIL
10697FIL
10698FIL
10698FIL
1069FIL
1069FIL
1069X-16-16C
1069X-6-06
1069X-8-08
1069X-8-08C
106A-1036
106A-1464
106A-7106
10-6C3MXS
10-6C3MXSS
10-6C4OMLOS
10-6C4OMLOSS
10-6C4OMXS
10-6C4OMXSBP
10-6C4OMXSS
106C-5405
10-6CMTXSS
106EX-3-012
106EX-4-012
106EX-4-012C
106EX-4-02
106EX-4-025
10-6F3MXS
10-6F42EDMLOS
10-6F42EDMLOSS
10-6F42EDMXS
10-6F42EDMXSBP
10-6F42EDMXSS
M12MSEL3/8N-6MO
M12MSEL3/8N-825
M12MSEL3/8N-B
M12MSEL3/8N-IIY
M12MSEL3/8N-M
M12MSEL3/8R-316
M12MTC1/2N-316
M12MTC1/2R-316
M12MVEL1/2N-316
M12MVEL3/8N-316
M12PCM18-316
M12RR
M12RUM10-316
M12RUM10-6MO
M12RUM10-B
M12RUM10-M
M12RUM10-NNR
M12RUM6-316
M12RUM6-6MO
M12RUM6-B
M12RUM6-M
M12RUM8-316
M12RUM8-6MO
M12RUM8-B
M12RUM8-M
M12SCFX
M12SCFXBP
M12SEODURX
M12SMSX
M12SSTOSS71X
M12SSTOSSCFX
M12TUC1-316
M12TUC6-316
M12TUC8-316
M12TURM10-316
M12TURM10-6MO
M12TURM10-B
M12TURM10-IIY
M12TURM10-M
M12TURM10-NNR
M12TURM10-TTZ
M12TURM12-316
M12TURM14-316
M12TURM16-316
M12TURM16-6MO
M12TURM18-316
M12TURM18-6MO
M12TURM3-316
M12TURM6-316
M12TURM6-316BT
M12TURM6-316-OXY
M12TURM6-6MO
M12TURM6-IIY
8TUR4-NNR
8TUR4-TTZ
8TUR5-316
8TUR6-316
8TUR6-6MO
8TUR6-M
8TUR6-NNR
8TUR8-316
8V3MXS
8V3P4S
8V3T4S
8V4OMLOS
8V4OMXS
8V5OMXS
8V6MXS
8V-B8XJ-SSP
8V-CO8L-1/3-V-SS
8V-CO8L-1-KZ-SS
8V-CO8L-1-V-SS
8WEMLOS
8WEMLOWLNMLS
8WEMTXWLNMS
8WEMTXWLNMSBP
8WGTXWLNSS
8WLNB
8WLNMB
8WLNMLS
8WLNMS
8WMK4WL4NMS
8WMK4WL4NMSS
8WMLOS
8WMLOWLNMLS
8WMLOWLNMLSS
8WMTXS
8WMTXWLNMB
8WMTXWLNMS
8WMTXWLNMSBP
8WMTXWLNMSS
8W-U12LB-G-SS
8W-U12LB-G-SS-HT
8W-U12LR-G-SS
8W-U12LR-G-SS-HT
8W-U12LR-T-SS
8X6TU8-316
8XABC8-316
8XASC12-316
8XASC8-316
8XASC8-6MO
8XATU6-316
8XATU8-316
8XEMQ1SS
8XEMQ2SS
8Z-B8LJ-SSP
R5V10-6953209G0QA1XG173
R5V10-6953609G0QA1223
R5V10-6953611G0QA1152
R5V10-69536A1070
R5V10M4933609G0QA1223
R5V12-3913209G0QA1008
R5V12-39132A1152
R5V12-3913609G0QA1152
R5V12-3931209G0QA1152
R5V12-3933209W02A1234
R5V12-6913209G0QA1152
R5V12-6951209G0QA1152
R5V12-69512A1XG139
R5V12-6953209GARA1210
R5V12M39132P2G0RA1284
R5V12M3913609G0QA1223
R-608LFCF
R60P
R60P-D-MAX
R60P-D-MAX-KIT
R60RDRCR01
R60S
R60T
R60T-D-MAX
R60T-H-B1
R60VM075
R60VM075-C2SO2S
R60VM075-O2S
R60VM075-OHP
R60VM075-TG
R60VM085
R60VM6075O1SC1S
R60VM7
R60VM7-C1S
R60VM7-C2S
R60VM7-C2SLT
R60VM7-CH
R60VM7-CM
R60VM7-GY
R60VM7-HT
R60VM7-O1S
R60VM7-O2S
R60VM7-OH
R60VM7-OHP
R60VM7-OM
R60VM7-OMP
R60VM7-OMSTS
R60VM7-SOG
R60VM7-TG
R60VM8
R60VM872
R60VM872-C1S
R60VM872-C2S

10-6F4OMXS	M12TURM6-M	9 BMP7-SS	R60VM872-CM
10-6F4OMXSS	M12TURM6-NNR	9 MPBF-SS	R60VM872-CMCSS
10-6F63MXS	M12TURM6-TTZ	9 MPFF-SS	R60VM872-CSS
10-6F642EDMXS	M12TURM8-316	9 PNBMP7-SS	R60VM872-O1S
10-6F64OMXS	M12TURM8-M	9/16X18 UNF-2B	R60VM872-O2S
10-6FMTXS	M12X1.5-6H-TAP	9000.0.009.1383.0	R60VM872-OH
10-6FMTXSS	M12XASC9/16MP-316	9000.0.109.1047.0	R60VM872-OM
10-6HMTXS	M14-6F8OHG5S	9000.0.910.1368.2	R60VM872-OMCSS
10-6HMTXSS	M147415	9000P3U4M0	R60VM872-OMP
106LX-12-08C	M14742	900FH10	R60VM872-OMPSRS
106LX-6-04C	M14BUWS	900FH30	R60VM872-SRS
106LX-6-05C	M14CU6-316	900MA30	R60VM882
106LX-8-06C	M14CU8-316	900MAM10	R60VM882-CSS
106NX-10-08	M14FBT1/2N-316	9020T08 08	R60VM882-SRS
106NX-10-10	M14FSC1/2GC-316	9020T08 10	R60VM8-SOG
106NX-12-10	M14FSC1/2N-316	9020T08 12	R60VM8-TG
106NX-12-12	M14FSC1/4N-316	9020T12 13	R60VRMM
106NX-16-12	M14FSC3/8N-316	9020T12 16	R60VRMM-TG
106NX-16-16	M14GC1/2R-316	9021T08 10	R60X3-316
106NX-20-16	M14L87NMLS	9021T08 12	R60X3CF
106NX-20-20	M14L8NMS	902FH10	R60X5-316
106NX-4-04	M14MA1/2N-316	902FH30	R60X5ST52CF
106NX-4-04C	M14MSC1/2K-316	902MAM30	R60X6ST52CF
106NX-5-04	M14MSC1/2N-316	903-0205009-OTC-1000	R60X8ST52CF
106NX-6-04	M14MSC1/2N-6MO	9040T08 13	R-612-CFX
106NX-6-05	M14MSC1/2N-825	9040T12 21	R-612LFCF
106NX-6-06	M14MSC1/2R-316	9041T08 13	R-612VBCF
106NX-8-06	M14MSC1/4N-316	9041T12 17	R-616-CFX
106NX-8-08	M14MSC1/4N-825	9070U06 13	R-616LFCF
106NX-8-08C	M14MSC1/4R-316	9070U08 13	R-616MTFRCF
106PC-10-08	M14MSC3/8K-316	9071U06 13	R-616-SSX
106PC-12-10	M14MSC3/8N-316	9071U08 13	R-616VBCF
106PC-4-04	M14MSC3/8N-MMX	9075T08 10	R-616WA-38X4.0S
106PC-5-04	M14MSC3/8R-316	9075T08 13	R-616WA-38X5.0S
106PC-6-05	M14MSEL1/2N-316	9075T08 17	R-616WA-39X7.5S
106PC-6-06	M14MSEL1/4K-316	9075T12 17	R-620-616RFCF
106PC-8-06	M14MSEL1/4N-316	9075T12 21	R-620BFS
106PC-8-08	M14PCM18-316	9080A06 08	R-620-CFX
106PX-10-08	M14RR	9080A06 10	R-620FB90CF
106PX-12-10	M14RUM6-316	9080E07 10	R-620LFCF
106PX-12-12	M14SCFX	9080E07 12	R-620MTFRCF
106PX-4-03	M14SEODURX	9080U06 08	R-620-SSX
106PX-4-04	M14SMSX	9080U06 10	R-620VBCF
106PX-4-04C	M14SSTOSS71X	9080U08 10	R-620VBSS
106PX-5-03	M14TURM10-316	9080U08 12	R-620WA-38X4.0S
106PX-5-04	M14TURM18-316	9083C	R-620WA-38X5.0S
106PX-5-04C2	M14TURM6-316	9084 13 13	R-620WA-38X5.0SS
106PX-5-04C2S	M14TURM8-316	9084 13 17	R-620WA-42.2X4.9SS
106PX-5-04S	M14X1.5-6H-TAP	9084 13 21	R-620WA-42.2X6.4S
106PX-6-04	M157406-1	9084 17 10	R-620WA-46X8.0S
106PX-6-05	M157406BA	9084 17 13	R-624-616RFCF
106PX-6-06	M157408-1	9084 17 17	R-624-616RFSS
106PX-6-06C	M157408BA	9084 17 21	R-624BFS

106PX-8-06	M157410-1	9084 19 13	R-624BFSS
106PX-8-08	M157410BA	9084 19 17	R-624-CFX
106S6-32-32	M157412	9084 19 21	R-624LFCF
10-6TRMLOSSV	M157412BA	9084 22 13	R-624MTFRCF
10-6TRMTXSS	M157414	9084 22 17	R-624MTFRSS
10-6TRTXS	M157415	9084 22 21	R-624-SSX
106YX-10-08	M157416	9085 13 08	R-624TFCF
106YX-12-10	M157416BA	9085 13 10	R-624VBCF
106YX-12-12	M157418	9085 13 13	R-624WA-38X5.0S
106YX-16-12	M157420	9085 17 06	R-624WA-48.3X2.8S
106YX-20-16	M157420BA	9085 17 08	R-624WA-48.3X3.7SS
106YX-4-03	M157422	9085 17 10	R-624WA-48.3X7.1S
106YX-4-04	M157425	9085 18 06	R-624WA-48.3X7.1SS
106YX-5-03	M157425BA	9085 18 08	R-624WA-50X5.0S
106YX-5-04	M157428	9085 18 10	R-624WA-50X6.0S
106YX-6-05	M157428BA	9085 19 06	R-624WA-56X8.5S
106YX-8-06	M157430	9085 19 08	R-632-620RFCF
1070003-063M5-04003-01123	M157432	9085 19 10	R-632-624RFCF
1070003-063M5-04003-01123	M157435	9085 20 03	R-632-624RFSS
1070003-070M5-05003-01430	M157435BA	9085 20 04	R-632BFS
1070003-070M5-05003-01430	M157438	9085 20 05	R-632BFSS
1070003-075M5-04003-01123	M157438BA	9085 21 04	R-632-CFX
1070003-075M5-04003-01123	M157442	9085 21 06	R-632FB45CF
1070003-075M5-06003-01123	M157442BA	9085 21 08	R-632FB90CF
1070003-075M5-06003-01123	M15CU8-316	9085 22 06	R-632FTFRCF
1070003-100M6-08004-01430	M15FEL3/8N-316	9085 22 08	R-632LFCF
1070003-100M6-08004-01430	M15FSC1/2N-316	9085 22 09	R-632MTFFR11/2CF
1070005-063M5-04003-01123	M15FSC1/2R-316	9085 22 10	R-632MTFR11/2CF
1070005-063M5-04003-01123	M15FSC3/8N-316	9085 22 13	R-632MTFRCF
1070005-095M6-05003-01427	M15LBL71X	9085 23 06	R-632MTFRSS
1070005-095M6-05003-01427	M15LBLKX	9085 23 08	R-632-SSX
1070005-100M6-08003-01430	M15LCFVOLX	9085 23 10	R-632VBCF
1070005-100M6-08003-01430	M15LCFX	9085 25 06	R-632WA-60.3X8.7S
1070005-100M6-08003-01940	M15LCFXBP	9085 25 08	R-632WA-60.3X8.7SS
1070005-100M6-08003-01940	M15LEODURX	9085 25 09	R-632WA-60X6.0S
1070005-100M6-08004-01430	M15LEODURXBP	9085 25 10	R-632WA-66X8.5S
1070005-100M6-08004-01430	M15LL71X	9085 25 13	R63E07S1SN
1070010-063M4-04003-00920	M15LMSX	9085 27 08	R63E07S1UN
1070010-063M4-04003-00920	M15LSTOSSCFX	9085 27 10	R63E17S1SN
1070010-063M5-04003-00920	M15MA1/2N-316	9085 27 13	R63E25S1SN
1070010-063M5-04003-00920	M15MBT1/2N-316	9085 27 19	R63E35S1SN
1070010-063M5-04003-01123	M15MSC1/2K-316	9085 30 08	R63PB10-1/4
1070010-063M5-04003-01123	M15MSC1/2N-316	9085 30 10	R63PB10-3/8
1070010-070M4-05003-01430	M15MSC1/2N-6MO	9085 30 13	R63PB14-1/2
1070010-070M4-05003-01430	M15MSC1/2N-B	9086 13 13	R63PB14-3/8
1070010-075M5-06003-01123	M15MSC1/2N-NNR	9086 13 17	R63PB4-1/8
1070010-075M5-06003-01123	M15MSC1/2R-316	9086 13 21	R63PB6-1/4
1070010-075M5-06003-01430	M15MSC1/4N-316	9086 17 10	R63PB6-1/8
1070010-075M5-06003-01430	M15MSC1/4N-B	9086 17 13	R63PB8-1/4
1070010-075M6-06003-01123	M15MSC1/4R-316	9086 17 17	R63PB8-1/8
1070010-075M6-06003-01123	M15MSC3/4N-B	9086 17 21	R63PK10-1/4
1070010-075M6-06003-01430	M15MSC3/4R-316	9086 18 13	R63PK10-3/8
1070010-075M6-06003-01430	M15MSC3/8N-316	9086 18 17	R63PK4-1/4

1070010-090M5-06003-01123	M15MSC3/8R-316	9086 19 13	R63PK4-1/8
1070010-090M5-06003-01123	M15MSEL1/2K-316	9086 19 17	R63PK6-1/4
1070010-095M6-05003-01427	M15MSEL1/2N-316	9086 19 21	R63PK6-1/8
1070010-095M6-05003-01427	M15MSEL1/2N-6MO	9086 20 10	R63PK8-1/4
1070010-100M6-08003-01430	M15MSEL1/2N-NNR	9086 20 19	R63PK8-1/8
1070010-100M6-08003-01430	M15MTC1/2N-316	9086 21 10	R64PB10-1/4
1070010-100M6-08003-01940	M15RUM12-316	9086 21 13	R64PB10-3/8
1070010-100M6-08003-01940	M15TURM10-316	9086 22 13	R64PB12-1/4
1070010-100M6-08004-01430	M15TURM10-B	9086 22 17	R64PB12-3/8
1070010-100M6-08004-01430	M15TURM3-316	9086 22 21	R64PB4-1/8
1070025-063M4-04003-00920	M15TURM8-316	9086 23 10	R64PB6-1/4
1070025-063M4-04003-00920	M16(46.0)TURM12-316	9086 23 13	R64PB6-1/8
1070025-075M6-06003-01430	M16-02-000	9086 23 17	R64PB8-1/4
1070025-075M6-06003-01430	M16-02-000	9086 23 21	R64PB8-1/8
1070025-100M6-08004-01430	M16-02-F00	9086 25 10	R64PB8-3/8
1070025-100M6-08004-01430	M16-02-F00	9086 25 13	R64PK10-1/4
1070050-100M6-08004-01430	M16-02-FM0	9086 25 17	R64PK10-3/8
1070050-100M6-08004-01430	M16-02-FM0	9086 25 21	R64PK12-1/4
1070-7597	M16-02-FU0	9086 27 13	R64PK12-3/8
1070-9050	M16-02-FU0	9086 27 17	R64PK14-1/2
1070-9447	M16-02-P00	9086 27 21	R64PK4-1/8
1070-9832	M16-02-P00	9086 27 27	R64PK6-1/4
10714FIL	M16-02-X00	9086 30 13	R64PK6-1/8
10714FIL	M16-02-X00	9086 30 17	R64PK8-1/4
10715FIL	M16-03-000	9086 30 21	R64PK8-1/8
10715FIL	M16-03-000	9086X20 10	R64X
10716FIL	M16-03-F00	9086X20 19	R65X8
10716FIL	M16-03-F00	9086X21 10	R65X8ST52CF
10720FIL	M16-04-000	9086X21 13	R66X8.5ST52
10720FIL	M16-04-000	9086X25 13	R68PB6M5
10726FIL	M1616MC6B	9086X25 17	R6EMVA84/120093-7-000
10726FIL	M1616W6B-XXS	9086X25 21	R6EMVA84/120093-7-S24/K8
10727FIL	M16-3/8F8OHGS	9086X27 17	R6PH
10727FIL	M167415	9086X27 21	R6V03-5911009G0QB1VFM
10728FIL	M16742	9086X27 27	R6V03-5913009G0QB1
10728FIL	M16-8F8OHG5S	9087 18 13	R6V03-591P2P2G0RB1
10728FIL	M168MC8B	9087 18 17	R6V03-593P0PM4MAB1
10728FIL	M169W3B-XXS	9087 20 10	R6V03-593P0PN10VB1
10729FIL	M16A-B8LJ2-BN-SSP	9087 20 19	R6V03-593P2P2G0RB1
10729FIL	M16A-B8LJ2-EPR-SSP	9087 21 10	R6V03-593P2PM10VB1
1072FIL	M16A-B8LJ2-SSP	9087 21 13	R6V03-5951009G0QB1VFM
1072FIL	M16A-B8LJ2-V-SSP	9087 23 10	R6V03-5951011GAGB1
1072FIL	M16A-B8LJ-SSP	9087 23 13	R6V03-5951209G0QB1
1072FIL	M16A-B8LJ-V-SSP	9087 23 17	R6V03-5953009G0QB1
10733FIL	M16A-B8XJ2-BN-SSP	9087 23 21	R6V03-59530B1
10733FIL	M16A-B8XJ2-SSP	9087 25 10	R6V03-5953209G0QB1
1073FIL	M16BUWS	9087 25 13	R6V03-5953211G0QB1
1073FIL	M16-C2-000	9087 25 17	R6V03-5954009G0QB1P25
10745FIL	M16-C2-000	9087 25 21	R6V03-59542B1
10745FIL	M16-C2-F00	9087 27 17	R6V03-595P2P2G0QB1
10746FIL	M16-C2-F00	9087 27 21	R6V03-595P2PSG0RB5
10746FIL	M16-C2-FM0	9087 27 27	R6V03-595V009G0QB1P315
1074FIL	M16-C2-FM0	9087 30 13	R6V06-5911009G0QB1

1074FIL	M16-C2-FS0	9087 30 17	R6V06-5911009G0QB1P07
10750FIL	M16-C2-FS0	9087 30 21	R6V06-5911009G0QB1VFM
10750FIL	M16-C2-GX0	9087A06 13	R6V06-5911009W31B1
10750FIL	M16-C2-GX0	9087A06 17	R6V06-5911209G0QB1VFM
10750FIL	M16-C2-X00	9087A06 21	R6V06-591P2P2G0RB5
10751FIL	M16-C2-X00	9087E07 13	R6V06-5931009G0QB1P17
10751FIL	M16-C3-000	9087E07 17	R6V06-59312B1
10752FIL	M16-C3-000	9087E07 21	R6V06-5933009G0QB1VFM
10752FIL	M16-C3-F00	9087U06 13	R6V06-5933009G0QB5VFM
10753FIL	M16-C3-F00	9087U06 17	R6V06-5933209G0QB1
10753FIL	M16-C3-FM0	9087U06 21	R6V06-593P2P2G0RB1P17
10754FIL	M16-C3-FM0	9087U08 13	R6V06-5951209G0QB1VFM
10754FIL	M16-C3-S00	9087U08 17	R6V06-5953009G0QB1VFM
10755FIL	M16-C3-S00	9087U08 21	R6V06-5953209G0QB1
10755FIL	M16-C3-X00	9087X20 10	R6V06-595P0PM10VB1
10756FIL	M16-C3-X00	9087X20 19	R6V06-595V009G0QB1
10756FIL	M16-C4-000	9087X21 10	R6V06-595V009G0QB1P240
10757FIL	M16-C4-000	9087X21 13	R6V06-595V009G0QB1P315
10757FIL	M16-C4-F00	9087X25 13	R6V06-595V009G0QB1P330
10758FIL	M16-C4-F00	9087X25 17	R6V06-595W0A1P35
10758FIL	M16-C4-FS0	9087X25 21	R6V10-5931009G0QB1
10759FIL	M16-C4-FS0	9087X27 17	R6V10-59310B1
10759FIL	M16-C4-X00	9087X27 21	R6V10-5931209G0QB1
1075FIL	M16-C4-X00	9087X27 27	R6V10-5933009G0QB1VFM
1075FIL	M16CU6-316	9090U06 01	R6V10-5933209G0QB1
1075Y12F00	M16FA1/2K-316	9090U06 03	R6V10-5933211G0QB1
1075Y12F01	M16FA1/2N-316	9094A06 06	R6V10-593P2P2G0RB1
1075Y12F02	M16FA3/4R-316	9094A06 08	R6V10-5951009G0QB1
1075Y12F03	M16FAGC1/2R-316	9094A06 10	R6V10-5951011G0QB1XG041
1075Y12F04	M16FBT1/2N-316	9094E07 08	R6V10-5953009G0QB1
1075Y12F05	M16FBT1/2R-316	9094E07 10	R6V10-5953009G0QB1VFM
1075Y12F07	M16FRT1/2N-316	9094E07 13	R6V10-59530B1
1075Y12F09	M16FSC1/2K-316	9094U06 06	R6V10-5953209G0QB1
1075Y12F10	M16FSC1/2N-316	9094U06 08	R6V10-5953211G0QB1
10760FIL	M16FSC1/2N-6MO	9094U06 10	R6V10-595V009G0QB1P315
10760FIL	M16FSC1/2N-B	9094U08 08	R6V10-595V009G0QB1P33
10761FIL	M16FSC1/2N-TTZ	9094U08 10	R6V10-595V0B1P10
10761FIL	M16GC1/2R-316	9094U08 13	R6VH
10764FIL	M16GC3/4R-316	9095 20 03	R6VPIXX-0P5P0P2G0SB1
10764FIL	M16L87NMLS	9095 20 04	R7-240MN
1076FIL	M16L87NMS	9095 21 04	R7-240M-N
1076FIL	M16L8NMS	9095 21 06	R7-2A-NC-MH
10779FIL	M16LL71X	9095 21 08	R73X7-316
10779FIL	M16MA1/2K-316	90-HEY1456A	R73X7ST52CF
10780FIL	M16MA1/2N-316	90-HEY1456A	R75G03C
10780FIL	M16MA1/2R(K)46MM-316	90-HEY1458A	R75G03C
1078X-4-04	M16MA1/2R-316	90-HEY1458A	R75G04C
1078X-6-06	M16MA1/4N-316	90-HEY1459A	R75G04C
10791N-4-4C	M16MA3/4N-316	90-HEY1459A	R75X3CF
10796FIL	M16MA3/4R-316	90-HEY1460A	R75X5ST52
10796FIL	M16MBT1/2N-316	90-HEY1460A	R75X5ST52CF
10797FIL	M16MRT1N-316	90KAAW10MPN	R75X5X6450E355UP
10797FIL	M16MSC1/2BR-316	90KAAW10MPX	R80X

10798FIL	M16MSC1/2K-316	90KAAW13MPN	R80X10ST52
10798FIL	M16MSC1/2N-316	90KAAW13MPX	R80X3ST52
107C-2076	M16MSC1/2N-6MO	90KAAW17MPN	R80X8ST52
107NX-12-12	M16MSC1/2N-6MO-NC	90KAAW17MPX	R88X14ST52
107NX-4-04	M16MSC1/2N-MMX	90KAIW13MPN	R-896-CFX
107NX-4-04S	M16MSC1/2N-TTZ	90KAIW13MPX	R90-D-RCR-01
107NX-6-06	M16MSC1/2R-316	90KAIW17MPN	R90-DS-RAC-01
107NX-8-08	M16MSC1/2R-6MO	90KAIW17MPX	R90P
107P	M16MSC1/2R-TTZ	90KAKO08MPN	R90P-D-MAX
107P	M16MSC1/4N-316	90KATF06MPN	R90P-D-MAX-KIT
107PC-6-06	M16MSC1/4R-316	90KATF06MPX	R90RDRCR01
107PX-4-02	M16MSC1N-316	90KATF08MPN	R90S
107PX-4-03	M16MSC3/4K-316	90KATF08MPX	R90T
107PX-4-03C2WS2	M16MSC3/4N-316	90KATF09MPN	R90T-D-MAX
107PX-4-03S2	M16MSC3/4N-6MO	90KATF09MPX	R90X3.5
107PX-4-04	M16MSC3/4N-TTZ	90KATF10MPX	R90X5ST52
107PX-4-04C2	M16MSC3/4R-316	910-000042-001	R90X9ST52
107PX-4-04C2W	M16MSC3/8BR-316	910-000042-002	R96X
107PX-4-04S2	M16MSC3/8K-316	910-000042-003	R97X12ST52
107PX-6-06	M16MSC3/8K-MMX	910-000042-004	RA01-10/04
107PX-6-06C2W	M16MSC3/8N-316	910-000042-006	RA01-10/06
107PX-8-08	M16MSC3/8N-6MO	910-000042-007	RA01-13/08
107PX-8-08C2W	M16MSC3/8R-316	910-000042-009	RA01-17/10
107YX-4-03	M16MSEL1/2K-316	910-000042-010	RA02 L8 00
107YX-4-03C2	M16MSEL1/2N-316	910-000042-011	RA04 L8 00
10-8 C5OLO-S	M16MSEL1/2N-6MO	910-000042-012	RA04 L8 63
10-8 C5OX-S	M16MSEL1/2N-MMX	910-000042-015	RA04 L8 L1
10-8 CBZ-SS	M16MSEL1/2R-316	910-000042-018	RA04 L8 L3
10-8 DBZ-SS	M16MSEL3/4N-316	910-000042-019	RA115-010-***-SB/MB-039
10-8 ELZ-316	M16MSEL3/8K-316	910-000042-020	RA115-010/MB115-006
10-8 ETX-S	M16MSEL3/8N-316	910-000042-021	RA115-015-T01-LH/MB-101
10-8 F5OG5-S	M16MSEL3/8R-316	910-000042-022	RA12 L8 00
10-8 F5OG5-SS	M16MVEL1/2N-316	910-000042-023	RA1200S1
10-8 F5OLO-S	M16RR	910-000042-024	RA1200S2
10-8 F5OX-S	M16RUM10-316	910-000042-027	RA1200S5
10-8 FBZ-SS	M16RUM10-6MO	910-000042-028	RA12-180
10-8 GBZ-SS	M16RUM12-316	910-000042-029	RA12-180
10-8 HBZ-SS	M16RUM12-6MO	910-000042-030	RA12-90
10-8 HLO-S	M16RUM12-825	910-000042-031	RA12-90
10-8 HTX-S	M16S31B71X	910-000042-032	RA142-008/MB142-078
10-8 LOHB3-S	M16SCFX	910-000042-033	RA142-008-031-SB/MB-001
10-8 LOHL6-S	M16SCFXBP	910-000042-034	RA20/S32873
10-8 T2HF-SS	M16SEODURX	910-000042-035	RA20/S32873
10-8 TL-S	M16SMSX	910-000042-036	RA20-180
10-8 TRBZ-SS	M16TURM12-316	910-000042-037	RA20-180
10-8 TRLON-S	M16TURM12-6MO	910-000042-038	RA20-90
10-8 TRLO-S	M16TURM12-6MO-NC	910-000042-039	RA20-90
10-8 TRTXN-S	M16TURM12-TTZ	910-000042-040	RA2-180
10-8 V5OLO-S	M16TURM18-316	910-000042-041	RA2-180
10800FIL	M16TURM20-316	910-000042-042	RA2-90
10800FIL	M16TURM20-6MO	910-000042-043	RA2-90
1080-1154	M16TURM25-316	910-000042-044	RA31 L8 00
10801FIL	M16X1.5-6H-TAP	910-000042-045	RA335

10801FIL	M18-02-BG00	910-000042-046	RA336SS
10801FIL	M18-02-BG00	910-000042-047	RA4-180
10801FIL	M18-02-CG00	910-000042-048	RA4-180
10802FIL	M18-02-CG00	910-000042-049	RA4-90
10802FIL	M18-02-CK00	910-000042-050	RA4-90
1080-3065	M18-02-CK00	910-000042-051	RA600S1
10803FIL	M18-02-DK00	910-000042-054	RA600S4
10803FIL	M18-02-DK00	910-000042-055	RA66 L8 L1
10804FIL	M18-04-CG00	910-000042-057	RA66 L8 L3
10804FIL	M18-04-CG00	910-000042-059	RA8-180
1080-5162-C	M18-04-CK00	910-000042-060	RA8-180
10808FIL	M18-04-CK00	910-000042-061	RA8-90
10808FIL	M18-04-CL00	910-000042-073	RA8-90
1080H66 01	M18-04-CL00	910-000042-075	RA90-008/MB90-001
1080H66 02	M18-04-DK00	910-000042-079	RAA012X
1080H66 03	M18-04-DK00	910-000042-091	RAA106.4X
1080H66 04	M18-3/8F8OHGS	910-000042-092	RAA106X
1080H69 01	M18A-C12L-1-SS	910-000042-093	RAA108X
1080H69 02	M18BUWS	910-000042-100	RAA109.5X
1080H69 03	M18-C2-BG00	910-000042-101	RAA110X
1080H69 04	M18-C2-BG00	910-000042-103	RAA112X
10810FIL	M18-C2-BL00	910-000042-105	RAA212.7X
10810FIL	M18-C2-BL00	910-000042-107	RAA213.5X
1081200005-01	M18-C2-CG00	910-000042-111	RAA214X
1081200006-01	M18-C2-CG00	910-000042-112	RAA215X
1081201005-01	M18-C2-CH00	910-000042-113	RAA216X
10812FIL	M18-C2-CH00	910-000042-115	RAA217.2X
10812FIL	M18-C2-CK00	910-000042-116	RAA218X
1083FIL	M18-C2-CK00	910-000042-139	RAA319X
1083FIL	M18-C2-CL00	910-000042-141	RAA320X
10841FIL	M18-C2-CL00	910-000042-148	RAA321.3X
10841FIL	M18-C2-DG00	910-000042-196	RAA322X
10841FIL	M18-C2-DG00	910-000042-198	RAA323X
10841FIL	M18-C2-DK00	910-000042-199	RAA325X
10842FIL	M18-C2-DK00	910-000042-201	RAA426.9X
10842FIL	M18-C2-DKM0	910-000042-202	RAA428X
10843FIL	M18-C2-DKM0	910-000042-212	RAA430X
10843FIL	M18-C2-DL00	910-000042-216	RAA532X
10845FIL	M18-C2-DL00	910-000042-217	RAA533.7X
10845FIL	M18-C2-DLM0	910-000042-221	RAA535X
10846-6-6	M18-C2-DLM0	910-000042-229	RAA538X
10848-12-12	M18-C3-BL00	910-000042-230	RAA540X
10848-6-6	M18-C3-BL00	910-000042-233	RAA542X
1084FIL	M18-C3-CH00	910-000042-265	RAA6-218VM
1084FIL	M18-C3-CH00	910-000042-271	RAA6-320VM
10855-6-6	M18-C3-CK00	910-000042-283	RAA644.5X
10870-03010	M18-C3-CK00	910-000042-284	RAA645X
10870-03010	M18-C3-CL00	910-000042-292	RAA648X
1087FIL	M18-C3-CL00	910-000042-293	RAA650.8X
1087FIL	M18-C3-DK00	910-000042-294	RAA650X
10891N-6-6	M18-C3-DK00	910-000042-298	RAA652X
108A-0439	M18-C3-DKM0	910-000042-302	RAA6-533.7VM
108A-0712	M18-C3-DKM0	910-000043-001	RAA655X

108A-8553-C	M18-C3-DL00	910-000043-002	RAA657X
10-8C5OMXS	M18-C3-DL00	910-000043-003	RAH081S50
10-8C5OMXSS	M18-C3-DLM0	910-000043-006	RAH101S50
10-8F5OMLOS	M18-C3-DLM0	910-000043-009	RAH121S10
10-8F5OMLOSCAP	M18-C4-BG00	910-000043-010	RAH121S50
10-8F5OMXS	M18-C4-BG00	910-000043-011	RAH161S10
10-8F5OMXSS	M18-C4-BH00	910-000043-012	RAH161S10V
10-8HMK4S	M18-C4-BH00	910-000043-018	RAH161S30
10-8HMK4SS	M18-C4-BK00	910-000043-019	RAH161S50
10-8HMTXS	M18-C4-BK00	910-000043-020	RAN006.4X
10-8HMTXSS	M18-C4-BL00	910-000043-021	RAN006X
10-8LEMQ1SS	M18-C4-BL00	910-000043-022	RAN008X
10-8LEMQ2CF	M18-C4-CG00	910-000043-023	RAN009.5X
10-8LEMQ2SS	M18-C4-CG00	910-000043-024	RAN010X
10-8TRMLOSS	M18-C4-CH00	910-000043-025	RAN012X
10-8TRMTXS	M18-C4-CH00	910-000043-027	RAN106.4X
10-8TRMTXSBP	M18-C4-CK00	910-000043-028	RAN106X
10-8TRMTXSBPNB	M18-C4-CK00	910-000043-029	RAN108X
10-8TRMTXSS	M18-C4-CKR0	910-000043-030	RAN109.5X
10-8XEMQ1CF	M18-C4-CKR0	910-000043-032	RAN110FHX
10-8XEMQ1SS	M18-C4-CL00	910-000043-033	RAN110X
10-8XEMQ2CF	M18-C4-CL00	910-000043-034	RAN112X
10-8XEMQ2SS	M18-C4-DK00	910-000043-036	RAN12-108-71
1090005-100M6-08003-01940	M18-C4-DK00	910-000043-037	RAN12-321.3VM
1090005-100M6-08003-01940	M18-C4-DKM0	910-000043-038	RAN2-106
1090005-16510-13004-02450	M18-C4-DKM0	910-000043-039	RAN2-110
1090005-16510-13004-02450	M18-C4-DL00	910-000043-041	RAN212.7X
1090010-100M6-08003-01940	M18-C4-DL00	910-000043-042	RAN213.5X
1090010-100M6-08003-01940	M18-C4-DLM0	910-000043-043	RAN214X
1090010-115M8-09503-01940	M18-C4-DLM0	910-000043-045	RAN215X
1090010-115M8-09503-01940	M18CU12-316	910-000043-046	RAN216X
1090010-115M8-09504-01940	M18FSC1/2N-316	910-000043-047	RAN217.2X
1090010-115M8-09504-01940	M18FSC3/4N-316	910-000043-048	RAN218FHX
1090010-130M5-09503-01940	M18L8NMS	910-000043-050	RAN218X
1090010-130M5-09503-01940	M18LCFX	910-000043-051	RAN3-110VM
1090010-16510-13004-02450	M18LCFXBP	910-000043-059	RAN3-112VM
1090010-16510-13004-02450	M18LEODURX	910-000043-091	RAN319X
1090025-115M8-09504-01940	M18LMSX	910-000043-141	RAN320X
1090025-115M8-09504-01940	M18LSTOSSCFX	910-000043-145	RAN321.3X
10901-00410	M18MA1/2N-316	910-000043-148	RAN3-218VM
10901-00410	M18MA1/2R-316	910-000043-160	RAN322X
1090-7310	M18MA3/4K-316	910-000043-193	RAN323X
1090-7638	M18MA3/4N-316	910-000043-198	RAN325X
10909-00410	M18MA3/4N-6MO	910-000043-202	RAN3-320VM
10909-00410	M18MA3/4R-316	910-000043-203	RAN3-321.3VM
10910-00500	M18MBT3/4N-316	910-000043-212	RAN3-428VM
10910-00500	M18MSC1/2BR-316	910-000043-217	RAN3-533.7VM
10911-00200	M18MSC1/2K-316	910-000043-220	RAN426.9X
10911-00200	M18MSC1/2N-316	910-000043-221	RAN428X
10912-01270	M18MSC1/2N-6MO	910-000043-229	RAN430X
10912-01270	M18MSC1/2N-IIY	910-000043-230	RAN532X
1091300011-01	M18MSC1/2N-TTZ	910-000043-231	RAN533.7X
1091300016-01	M18MSC1/2R(ED)-316	910-000043-233	RAN535X

1091300071-01	M18MSC1/2R-316
10913-00450	M18MSC1/2R-6MO
10913-00450	M18MSC1/2R-B
10913-00540	M18MSC1/4N-316
10913-00540	M18MSC1N-316
10913-00725	M18MSC3/4BR-316
10913-00725	M18MSC3/4K-316
10913-00780	M18MSC3/4N-316
10913-00780	M18MSC3/4N-6MO
10913-01045	M18MSC3/4N-IIY
10913-01045	M18MSC3/4N-TTZ
10913-01100	M18MSC3/4R(ED)-316
10913-01100	M18MSC3/4R-316
1091301371-01	M18MSC3/4R-6MO
1091302090-01	M18MSC3/4R-B
1091302371-01	M18MSC3/8N-316
10914-00300	M18MSC3/8N-6MO
10914-00300	M18MSC3/8N-IIY
10914-00380	M18MSC3/8R-316
10914-00380	M18MSEL1/2K-316
10914-00400	M18MSEL1/2N-316
10914-00400	M18MSEL1/2N-6MO
10914-00800	M18MSEL1/2N-TTZ
10914-00800	M18MSEL3/4K-316
10915-00550	M18MSEL3/4N-316
10915-00550	M18MSEL3/4N-6MO
10915-00650	M18MSEL3/4N-IIY
10915-00650	M18MSEL3/4N-TTZ
10915-01850	M18RR
10915-01850	M18RUM12-316
10916-00250	M18RUM12-6MO
10916-00250	M18RUM16-316
10916-01100	M18TURM12-316
10916-01100	M18TURM12-6MO
10918-00200	M18TURM12-IIY
10918-00200	M18TURM14-316
10918-01045	M18TURM15-316
10918-01045	M18TURM20-316
10919-00300	M18TURM20-6MO
10919-00300	M18TURM25-316
1092T53 00	M18TURM25-6MO
1092T56 00	M18TURM6-316
10939-01000	M18TURM6-6MO
10939-01000	M18X1.5-6H-TAP
10941-01850	M193002
10941-01850	M193002
10941-02480	M193005
10941-02480	M193005
10943-00600	M1B125ZN
10943-00600	M1B125ZN196
10943-00750	M1J011C2
10943-00750	M1J011C2
10943-00850	M207415

910-000043-267	RAN538X
910-000043-298	RAN540X
910-000043-301	RAN542X
910-000043-307	RAN644.5X
910-000044-001	RAN645X
910-000044-002	RAN648X
910-000044-003	RAN650.8X
910-000044-004	RAN650X
910-000044-006	RAN652X
910-000044-007	RAN655X
910-000044-009	RAN657X
910-000044-010	RAN760.3X
910-000044-011	RAN763.5X
910-000044-012	RAN770X
910-000044-018	RAN773X
910-000044-019	RAN776.1X
910-000044-020	RAN8101.8X
910-000044-021	RAN888.9X
910-000044-024	RANE410X
910-000044-027	RANE412X
910-000044-028	RANE415X
910-000044-029	RANE4X
910-000044-030	RANE620X
910-000044-032	RANE622X
910-000044-033	RANE625X
910-000044-035	RANE6X
910-000044-036	RANG106.4X
910-000044-037	RANG106X
910-000044-038	RANG108X
910-000044-039	RANG109.5X
910-000044-040	RANG110X
910-000044-041	RANG112X
910-000044-042	RANG212.7X
910-000044-043	RANG213.5X
910-000044-045	RANG214X
910-000044-046	RANG215X
910-000044-047	RANG216X
910-000044-048	RANG217.2X
910-000044-049	RANG218X
910-000044-050	RANG319X
910-000044-051	RANG320X
910-000044-054	RANG321.3X
910-000044-059	RANG322X
910-000044-061	RANG323X
910-000044-075	RANG325X
910-000044-091	RANG426.9X
910-000044-093	RANG428X
910-000044-096	RANG430X
910-000044-101	RANG532X
910-000044-109	RANG533.7X
910-000044-115	RANG535X
910-000044-118	RANG538X
910-000044-139	RANG540X

10943-00850	M20742	910-000044-152	RANG542X
10946-01200	M20A-B8LJ2-SS	910-000044-155	RANG644.5X
10946-01200	M20A-C12L-10-SS	910-000044-184	RANG645X
10947-00600	M20FA1/2N-316	910-000044-193	RANG648X
10947-00600	M20FA3/4N-316	910-000044-198	RANG650.8X
10948-01000	M20FA3/4R-316	910-000044-202	RANG650X
10948-01000	M20FBC3/4N-316	910-000044-211	RANG652X
1094P04 00	M20FBT1/2N-316	910-000044-212	RANG655X
1094P04 05	M20FRT1/2N-316	910-000044-213	RANG657X
1094P53 01	M20FSC1/2N-316	910-000044-217	RAP006.4X
1094P53 02	M20FSC1/2N-6MO	910-000044-220	RAP006WX
1094P53 03	M20FSC1/2R-316	910-000044-221	RAP006X
1094P55 01	M20FSC1/4N-316	910-000044-232	RAP008BX
1094P56 00	M20FSC3/4K-316	910-000044-235	RAP008X
1094P56 01	M20FSC3/4N-316	910-000044-239	RAP009.5X
1094P60 00	M20FSC3/4N-NNR	910-000044-246	RAP010BX
1094P62 00	M20FSC3/4N-TTZ	910-000044-265	RAP010WX
1094T53 00	M20GC1/2R-316	910-000044-267	RAP010X
1094U60 00	M20GC3/4R-316	910-000044-283	RAP012WX
1094U60 01	M20MA1/2N-316	910-000044-292	RAP012X
1094U60 04	M20MA1/2N-6MO	910-000044-293	RAP10-006
1095EL-12	M20MA1/2R-316	910-000044-301	RAP1-009.5
1095EL-12	M20MA1N-316	910-000044-302	RAP1-010
1096B-11	M20MA1R-316	910-000044-303	RAP10-106
1096B-11	M20MA3/4N-316	910-000044-307	RAP10-108
1096Y62F00	M20MA3/4N-6MO	910-000044-310	RAP10-112
1096Y62F01	M20MA3/4N-HC	910-000044-312	RAP1-012
1096Y62F02	M20MA3/4R-316	910-000044-373	RAP10-215
1096Y62F03	M20MBT1/2N-316	910-000045-001	RAP10-216
1096Y62F04	M20MBT3/4N-316	910-000045-002	RAP10-218
1096Y62F05	M20MFAM12J4	910-000045-003	RAP10-320
1096Y62F09	M20MSC1/2BR-316	910-000045-004	RAP10-322
1096Y62F10	M20MSC1/2K-316	910-000045-006	RAP10-325
1097-11	M20MSC1/2N-316	910-000045-009	RAP10-428
1097-11	M20MSC1/2N-6MO	910-000045-010	RAP10-430
1098-11	M20MSC1/2N-825	910-000045-011	RAP10-535
1098-11	M20MSC1/2N-NNR	910-000045-012	RAP10-542
1098Y56F00	M20MSC1/2N-TTZ	910-000045-013	RAP106.4X
1098Y56F01	M20MSC1/2R-316	910-000045-018	RAP106X
1098Y56F02	M20MSC1/2R-6MO-NC	910-000045-019	RAP108X
1098Y56F03	M20MSC1/2R-TTZ	910-000045-020	RAP109.5X
1098Y56F04	M20MSC1/4K-316	910-000045-021	RAP1-106
1098Y56F05	M20MSC1N-316	910-000045-024	RAP1-108
1098Y56F07	M20MSC1N-6MO	910-000045-025	RAP110BX
1098Y56F09	M20MSC1N-TTZ	910-000045-027	RAP110X
1098Y56F10	M20MSC1R-316	910-000045-028	RAP1-110
1098Y60F00	M20MSC3/4BR-316	910-000045-029	RAP1-112
1098Y60F01	M20MSC3/4K-316	910-000045-030	RAP112BX
1098Y60F02	M20MSC3/4N-316	910-000045-033	RAP112WX
1098Y60F03	M20MSC3/4N-6MO	910-000045-035	RAP112X
1098Y60F04	M20MSC3/4N-NNR	910-000045-036	RAP12-010
1098Y60F05	M20MSC3/4N-TTZ	910-000045-037	RAP12-012
1098Y60F07	M20MSC3/4R-316	910-000045-038	RAP12-109.5

1098Y60F10	M20MSC3/4RED-316	910-000045-039	RAP12-110
1099P56 01	M20MSC3/4R-MMX	910-000045-042	RAP12-112
1099Y56F00	M20MSC3/8N-316	910-000045-045	RAP1-212.7
1099Y56F01	M20MSEL1/2N-316	910-000045-046	RAP1-215
1099Y56F02	M20MSEL1R-316	910-000045-047	RAP1-216
1099Y56F03	M20MSEL3/4K-316	910-000045-048	RAP1-218
1099Y56F04	M20MSEL3/4N-316	910-000045-051	RAP12-212.7
1099Y56F05	M20MSEL3/4R-316	910-000045-054	RAP12-215
1099Y56F07	M20RR	910-000045-099	RAP12-216
1099Y56F09	M20RUM10-316	910-000045-152	RAP12-218
1099Y56F10	M20RUM12-316	910-000045-158	RAP12-319
10BAMJ4FL6	M20RUM16-316	910-000045-193	RAP12-320
10BBMTXS	M20SCFX	910-000045-195	RAP12-322
10BBMTXSBP	M20SCFXBP	910-000045-211	RAP12-325
10BBMTXSS	M20SEODURX	910-000045-212	RAP12-428
10BC10-316	M20SMSX	910-000045-213	RAP12-430
10BF10-316	M20SSTOSSCFX	910-000045-217	RAP12-532
10BF10-825	M20TURM12-316	910-000045-226	RAP12-535
10BF10-B	M20TURM12-6MO	910-000045-283	RAP12-538
10BF121288	M20TURM12-6MO-NC	910-000045-285	RAP12-542
10BF161688	M20TURM12-TTZ	910-000046-001	RAP12-648
10BLEN10-316	M20TURM16-316	910-000046-002	RAP12-650
10BLP10-316	M20TURM16-TTZ	910-000046-003	RAP12-655
10BMLS	M20TURM18-316	910-000046-004	RAP12-657
10BMLSBP	M20TURM18-6MO	910-000046-006	RAP1-319
10BMLSBPBLKOEL	M20TURM25-316	910-000046-007	RAP1-320
10BMLSS	M20TURM25-6MO	910-000046-009	RAP1-321.3
10BMTXS	M20X1.5-8R RA-SS	910-000046-010	RAP13-212.7
10BMTXSBP	M21-03-F00	910-000046-011	RAP13-218
10BMTXSS	M21-03-F00	910-000046-012	RAP1-322
10BUWS	M21-C3-000	910-000046-015	RAP1-323
10C3MXS	M21-C3-000	910-000046-018	RAP1-325
10C3MXSS	M21-C3-F00	910-000046-019	RAP14-006
10C43-12-6	M21-C3-F00	910-000046-020	RAP14-112
10C43-14-6	M21-C3-X00	910-000046-021	RAP14-216
10C43-16-8	M21-C3-X00	910-000046-023	RAP14-218
10C43-16-8C	M22-10F8OHG5S	910-000046-024	RAP1-428
10C43-20-10	M22BUWS	910-000046-025	RAP1-430
10C43-20-12	M22FSC1K-316	910-000046-027	RAP14-320
10C43-25-12	M22FSC3/4K-316	910-000046-028	RAP1-532
10C43-25-16	M22FSC3/4N-316	910-000046-029	RAP1-538
10C43-30-16	M22GC1/2R-316	910-000046-030	RAP1-542
10C46-10-4	M22L8NMS	910-000046-033	RAP16-108/1
10C46-10-5	M22LCFVOLX	910-000046-034	RAP16-110/1
10C46-10-6	M22LCFX	910-000046-035	RAP16-112
10C46-12-4	M22LCFXBP	910-000046-036	RAP16-112/1
10C46-12-5	M22LEODURX	910-000046-037	RAP16-215
10C46-12-6	M22LMSX	910-000046-038	RAP16-215/1
10C46-14-6	M22MA1N-316	910-000046-039	RAP16-216
10C46-14-8	M22MSC1/2K-316	910-000046-040	RAP16-216/1
10C46-16-10	M22MSC1/2N-316	910-000046-041	RAP16-217.2
10C46-16-8	M22MSC1/2R-316	910-000046-042	RAP16-218
10C46-20-10	M22MSC1/2R-ED-316	910-000046-043	RAP16-218/1

10C46-20-12	M22MSC1N-316	910-000046-045	RAP16-320
10C46-25-12	M22MSC1R-316	910-000046-046	RAP16-320/1
10C46-25-16	M22MSC3/4BR-316	910-000046-047	RAP16-322
10C46-30-16	M22MSC3/4K-316	910-000046-048	RAP-16-322/1
10C46-38-20	M22MSC3/4K-B	910-000046-049	RAP16-325
10C46-6-4	M22MSC3/4N-316	910-000046-051	RAP16-325/1
10C46-8-4	M22MSC3/4N-B	910-000046-054	RAP16-430
10C48-10-4	M22MSC3/4R-316	910-000046-059	RAP1-644.5
10C48-10-5	M22MSEL1N-316	910-000046-075	RAP1-648
10C48-10-6	M22MSEL3/4N-316	910-000046-079	RAP16-535
10C48-12-4	M22RR	910-000046-152	RAP18-106
10C48-12-5	M22TURM18-316	910-000046-155	RAP18-110
10C48-12-6	M22TURM20-316	910-000046-160	RAP18-110/1
10C48-14-6	M22TURM8-316	910-000046-161	RAP18-112
10C48-14-8	M22X1.5-6H-TAP	910-000046-199	RAP18-215
10C48-16-10	M24742	910-000046-212	RAP18-216
10C48-16-8	M24BUWS	910-000046-213	RAP18-218
10C48-20-10	M24RR	910-000046-217	RAP18-320
10C48-20-12	M25179-CU	910-000046-220	RAP18-321.3
10C48-25-12	M25180	910-000046-221	RAP18-535
10C48-25-16	M25180-CU	910-000046-231	RAP18-542
10C48-30-16	M25181-CU	910-000046-265	RAP2-006
10C48-38-20	M25182	910-000046-271	RAP2-006.4
10C48-6-4	M25182-CU	910-000046-276	RAP2-008
10C48-8-4	M25A-B8LJ2-SS	910-000046-291	RAP2-009.5
10C4OMLOS	M25A-C16L-10-SS	910-000046-292	RAP2-010
10C4OMLOSS	M25A-C16L-1-SS	910-000046-293	RAP2-012
10C4OMLOSV	M25FA1N-316	910-000047-001	RAP206.4X
10C4OMXS	M25FA3/4N-316	910-000047-002	RAP206X
10C4OMXSBP	M25FSC1K-316	910-000047-003	RAP208X
10C4OMXSS	M25FSC1N-316	910-000047-004	RAP209.5X
10C4OMXSV	M25FSC1N-6MO	910-000047-006	RAP2-106
10C56-10-4	M25FSC1N-MMX	910-000047-007	RAP2-106.4
10C56-12-5	M25FSC1N-NNR	910-000047-009	RAP2-108
10C56-12-6	M25FSC1N-TTZ	910-000047-010	RAP210X
10C56-12-6C	M25FSC3/4N-316	910-000047-011	RAP2-110
10C56-16-8	M25FSC3/4N-TTZ	910-000047-012	RAP2-112
10C56-8-3	M25MA1K-316	910-000047-015	RAP212.7BX
10C58-16-8	M25MA1N-316	910-000047-017	RAP212.7X
10C5OMLOS	M25MA1N-6MO	910-000047-018	RAP212X
10C5OMXS	M25MA1R-316	910-000047-019	RAP213.5X
10C5OMXSS	M25MA3/4N-316	910-000047-020	RAP214X
10C6MK4S	M25MSC1/2N-316	910-000047-021	RAP215WX
10C6MLOS	M25MSC1/2N-6MO	910-000047-024	RAP215X
10C6MLOSS	M25MSC1/2N-IIY	910-000047-025	RAP216X
10C6MLOSSV	M25MSC1/2N-MMX	910-000047-027	RAP217.2X
10C6MXB	M25MSC1/2N-NNR	910-000047-028	RAP218BX
10C6MXS	M25MSC1/2N-TTZ	910-000047-029	RAP218WX
10C6MXSBP	M25MSC1/2R-316	910-000047-030	RAP218X
10C6MXSBPNB	M25MSC11/2R-316	910-000047-031	RAP2-212.7
10C6MXSS	M25MSC1BR-316	910-000047-033	RAP2-213.5
10C70-12-6	M25MSC1K-316	910-000047-034	RAP2-214
10C70-14-6	M25MSC1K-6MO	910-000047-035	RAP2-215

10C70-16-10	M25MSC1K-MMX	910-000047-036	RAP2-216
10C70-16-8	M25MSC1K-TTZ	910-000047-037	RAP2-218
10C70-20-10	M25MSC1N-316	910-000047-038	RAP2-320
10C70-20-12	M25MSC1N-6MO	910-000047-039	RAP2-321.3
10C70-25-10	M25MSC1N-IIY	910-000047-040	RAP2-322
10C70-25-12	M25MSC1N-MMX	910-000047-042	RAP2-323
10C70-25-16	M25MSC1N-NNR	910-000047-043	RAP2-325
10C70-30-16	M25MSC1N-TTZ	910-000047-045	RAP2-430
10C71-16-8	M25MSC1R-316	910-000047-046	RAP2-532
10C71-20-10	M25MSC1R-6MO	910-000047-047	RAP2-533.7
10C71-25-12	M25MSC1R-MMX	910-000047-048	RAP2-538
10C71-30-16	M25MSC1R-TTZ	910-000047-051	RAP2-644.5
10C71-38-20	M25MSC3/4BR-316	910-000047-052	RAP2-648
10C71-38-24	M25MSC3/4K-316	910-000047-053	RAP3-006
10C73-20-12	M25MSC3/4N-316	910-000047-054	RAP3-006.4
10C73-25-12	M25MSC3/4N-6MO	910-000047-072	RAP3-010
10C73-25-12SW41	M25MSC3/4N-MMX	910-000047-075	RAP3-012
10C73-30-16	M25MSC3/4N-NNR	910-000047-091	RAP3-106
10C73-38-20	M25MSC3/4N-TTZ	910-000047-093	RAP3-108
10C77-16-10	M25MSC3/4R-316	910-000047-099	RAP3-110
10C77-16-8	M25MSC3/4R-6MO	910-000047-100	RAP3-112
10C77-20-10	M25MSC3/4R-TTZ	910-000047-118	RAP319X
10C77-20-12	M25MSEL1/2N-316	910-000047-152	RAP320BX
10C77-25-12	M25MSEL1N-316	910-000047-158	RAP320X
10C77-25-16	M25MSEL3/4N-316	910-000047-211	RAP321.3X
10C77-30-16	M25MSEL3/4N-6MO	910-000047-213	RAP3-212.7
10C77-38-20	M25MSEL3/4N-TTZ	910-000047-217	RAP3-213.5
10C78-25-12	M25RUM10-316	910-000047-220	RAP3-214
10C78-30-16	M25RUM12-316	910-000047-267	RAP3-215
10C78-38-20	M25RUM15-316	910-000047-285	RAP3-216
10C78-38-24	M25RUM16-316	910-000047-293	RAP3-217.2
10C79-25-12	M25RUM18-316	910-000047-294	RAP3-218
10C79-30-16	M25RUM20-316	910-000047-301	RAP322BX
10C79-38-20	M25RUM22-316	910-000048-001	RAP322WX
10C8X-14-06	M25SCFX	910-000048-002	RAP322X
10C9X-14-06	M25SCFXBP	910-000048-003	RAP323X
10C9X-16-08	M25SEODURX	910-000048-004	RAP325X
10CMTXS	M25SMSX	910-000048-005	RAP3-320
10CMTXSS	M25SSTOSS71X	910-000048-007	RAP3-321.3
10CNMLS	M25SSTOSSCFX	910-000048-008	RAP3-322
10CNX-12-05	M25TURM12-316	910-000048-009	RAP3-325
10CNX-14-06	M25TURM12-6MO	910-000048-010	RAP3-426.9
10CNX-16-08	M25TURM12-NNR	910-000048-012	RAP3-428
10CNX-16-08-6V	M25TURM12-TTZ	910-000048-013	RAP3-430
10CNX-20-10	M25TURM16-316	910-000048-014	RAP3-532
10CNX-20-10-6V	M25TURM18-316	910-000048-015	RAP3-533.7
10CNX-25-12	M25TURM18-6MO	910-000048-016	RAP3-535
10CNX-30-16	M25TURM20-316	910-000048-019	RAP3-538
10CPX-10-04	M25TURM20-6MO	910-000048-021	RAP3-540
10CPX-12-05	M25TURM20-NNR	910-000048-025	RAP3-542
10DTA10P50G16A	M25TURM20-TTZ	910-000048-028	RAP3-644.5
10DTAXXP50G16A	M26-02-FM0	910-000048-030	RAP3-648
10DTEA06	M26-02-FM0	910-000048-031	RAP3-650

10DTEA10Q	M26-02-M00	910-000048-034	RAP3-650.8
10E6MK4S	M26-02-M00	910-000048-037	RAP3-657
10EE10-316	M26-03-F00	910-000048-038	RAP3-776.1
10EE10-MMX	M26-03-F00	910-000048-044	RAP4-012
10EMK4S	M26-03-X00	910-000049-001	RAP4-108
10EMLOSS	M26-03-X00	910-000049-002	RAP4-110
10EMTXS	M26-04-FMS	910-000049-003	RAP4-112
10EMTXSBP	M26-04-FMS	910-000049-004	RAP4-216
10EMTXSS	M26-C2-000	910-000049-007	RAP426.9BX
10ET10-316	M26-C2-000	910-000049-008	RAP426.9X
10ET10-MMX	M26-C2-F00	910-000049-009	RAP428WX
10F121286	M26-C2-F00	910-000049-010	RAP428X
10F121288	M26-C2-FP0	910-000049-011	RAP430BX
10F121686	M26-C2-FP0	910-000049-012	RAP430X
10F12983	M26-C2-X00	910-000049-013	RAP4-426.9
10F15ED1	M26-C2-X00	910-000049-014	RAP4-428
10F15ED1	M26-C3-000	910-000049-015	RAP4-650
10F161686	M26-C3-000	910-000049-016	RAP5-008
10F16483	M26-C3-F00	910-000049-017	RAP5-108
10F16983	M26-C3-F00	910-000049-091	RAP5-110
10F16986	M26-C3-FMP	910-000050-001	RAP5-112
10F3MK4S	M26-C3-FMP	910-000050-003	RAP519X
10F3MXS	M26-C3-GX0	910-000050-004	RAP520X
10F3MXSS	M26-C3-GX0	910-000050-007	RAP521.3X
10F42EDMLOS	M26-C3-MX0	910-000050-009	RAP5-212.7
10F42EDMLOSS	M26-C3-MX0	910-000050-010	RAP5-215
10F42EDMLOSSV	M26-C3-X00	910-000050-011	RAP5-216
10F42EDMXS	M26-C3-X00	910-000050-012	RAP5-218
10F42EDMXSBP	M26-C4-000	910-000050-013	RAP522X
10F42EDMXSS	M26-C4-000	910-000050-014	RAP523X
10F47OMLOS	M26-C4-F00	910-000050-015	RAP525X
10F4882	M26-C4-F00	910-000050-016	RAP526.9X
10F4OMXS	M26-C4-FM0	910-000050-027	RAP528X
10F4OMXSBP	M26-C4-FM0	910-000050-031	RAP530X
10F4OMXSS	M26-C4-FMS	910-000050-039	RAP5-320
10F4OMXSV	M26-C4-FMS	910-000051-001	RAP5-322
10F5OMLOS	M26-C4-FS0	910-000051-003	RAP532BX
10F5OMLOSS	M26-C4-FS0	910-000051-004	RAP532X
10F5OMXS	M26-C4-G00	910-000051-007	RAP533.7X
10F5OMXSS	M26-C4-G00	910-000051-008	RAP535BX
10F63MXS	M26-C4-M00	910-000051-009	RAP535X
10F642EDMLS	M26-C4-M00	910-000051-010	RAP538BX
10F642EDMLSS	M26-C4-MX0	910-000051-012	RAP538X
10F642EDMLSSV	M26-C4-MX0	910-000051-013	RAP540BX
10F642EDMXS	M26-C4-S00	910-000051-014	RAP540X
10F642EDMXSBP	M26-C4-S00	910-000051-015	RAP5-428
10F642EDMXSBPNB	M26-C4-X00	910-000051-016	RAP542BX
10F642EDMXSS	M26-C4-X00	910-000051-039	RAP542WX
10F64OMXS	M26RR	910-000051-040	RAP542X
10F64OMXSS	M27406	910-000052-001	RAP5-430
10F6882	M27410	910-000052-003	RAP5-532
10F6MXSS	M27412	910-000052-004	RAP5-535
10F8882	M27414	910-000052-006	RAP5-540

10FBT8N-316	M27415	910-000052-007	RAP5-542
10FEL6N-316	M27416	910-000052-008	RAP5-645
10FEL8N-316	M27418	910-000052-009	RAP5-648
10FF10-316	M27420	910-000052-010	RAP5-650
10FF10-B	M27425	910-000052-012	RAP6-008
10FF10-M	M27430	910-000052-013	RAP6-106
10FMTXB	M27432	910-000052-014	RAP6-106.4
10FMTXS	M27BUWS	910-000052-015	RAP6-108
10FMTXSS	M27L8NMS	910-000052-016	RAP6-112
10FNMK4S	M27RR	910-000052-018	RAP6-212.7
10FNMKAS	M27X2-6H-TAP	910-000052-019	RAP6-215
10FNMLS	M28-04-CG00	910-000052-034	RAP6-216
10FNMLSS	M28-04-CG00	910-000052-040	RAP6-217.2
10FNMTXS	M28-06-CG00	910-000053-001	RAP6-218
10FNMTXSS	M28-06-CG00	910-000053-004	RAP6-319
10FSC6N-316	M28-06-CH00	910-000053-006	RAP6-320
10FSC8N-316	M28-06-CH00	910-000053-007	RAP6-321.3
10FSC8N-MMX	M28329-CU	910-000053-008	RAP6-322
10G4MXS	M28330-CU	910-000053-009	RAP6-325
10G4MXSS	M28331-CU	910-000053-010	RAP6-428
10GMTXSS	M28332-CU	910-000053-012	RAP644.5BX
10H6MK4S	M28334-CU	910-000053-013	RAP644.5X
10HMK4S	M28336-CU	910-000053-014	RAP645X
10HMK4SS	M28BD30.0CFXBP	910-000053-015	RAP648X
10HMLOS	M28-C3-CG00	910-000053-016	RAP650.8BX
10HMLOSS	M28-C3-CG00	910-000053-018	RAP650.8X
10HMLOSV	M28-C3-CH00	910-000053-028	RAP650X
10HMTXB	M28-C3-CH00	910-000053-031	RAP652X
10HMTXS	M28-C3-CK00	910-000053-032	RAP6-535
10HMTXSS	M28-C3-CK00	910-000053-034	RAP6-538
10HMX6SS	M28-C3-CL00	910-000053-038	RAP6-542
10J6MK4S	M28-C3-CL00	910-000053-040	RAP655X
10JMK4S	M28-C3-DK00	910-000101-001	RAP657X
10JMLOSS	M28-C3-DK00	910-000101-003	RAP6-644.5
10JMTXS	M28-C3-DL00	910-000101-004	RAP6-655
10JMTXSBP	M28-C3-DL00	910-000101-007	RAP757.2X
10JMTXSS	M28-C4-0H00-07	910-000101-008	RAP760.3X
10KBAH13MVX	M28-C4-0H00-07	910-000101-016	RAP763.5X
10KBAH14MVX	M28-C4-0H00-55	910-000101-019	RAP770X
10KBAM14MVX	M28-C4-0H00-55	910-000101-020	RAP773X
10KBAM14MVXSL	M28-C4-BG00	910-000101-025	RAP776.1X
10KBAR13MVX	M28-C4-BG00	910-000101-027	RAP8101.8X
10KBAR14MVX	M28-C4-BH00	910-000101-028	RAP888.9X
10KBAW13MVX	M28-C4-BH00	910-000101-031	RAPE406X
10KBAW13MVXSL	M28-C4-CG00	910-000101-032	RAPE408X
10KBAW17MVX	M28-C4-CG00	910-000101-037	RAPE410X
10KBAW17MVXSL	M28-C4-CH00	910-000101-038	RAPE412.7X
10KBIW13MVX	M28-C4-CH00	910-000101-040	RAPE412X
10KBIW17MVX	M28-C4-CH00-07	910-000101-044	RAPE414X
10KBPR06MVN	M28-C4-CH00-07	910-000101-049	RAPE415X
10KBPR06MVX	M28-C4-CK00	910-000101-051	RAPE416X
10KBPR10MVX	M28-C4-CK00	910-000101-052	RAPE417.2X
10KBTF09MVX	M28-C4-CL00	910-000101-055	RAPE418X

10KBTF09MVXSL	M28-C4-CL00	910-000101-056	RAPE419X
10KBTH09MVX	M28-C4-CL00-07	910-000101-057	RAPE4X
10KBTH09MVXSL	M28-C4-CL00-07	910-000101-064	RAPE620X
10KBTP06MVN	M28-C4-DK00	910-000101-068	RAPE621.3X
10KBTP10MVX	M28-C4-DK00	910-000101-089	RAPE622X
10KBTR09MVX	M28-C4-DKM0	910-000101-092	RAPE623X
10KBTR09MVXSL	M28-C4-DKM0	910-000102-001	RAPE625X
10KBUK125MVX	M28-C4-DL00	910-000102-003	RAPE626.9X
10KBUK250MVX	M28-C4-DL00	910-000102-004	RAPE628X
10KBUK500MVX	M28-C4-DL00-07	910-000102-007	RAPE630X
10KFAH13MVX	M28-C4-DL00-07	910-000102-008	RAPE632X
10KFAH14MVX	M28-C4-DLM0	910-000102-013	RAPEA15-612
10KFAM14MVX	M28-C4-DLM0	910-000102-015	RAPEA15-615
10KFAM14MVXSL	M28-C6-BG00	910-000102-016	RAPEA15-620
10KFAR13MVX	M28-C6-BG00	910-000102-019	RAPEA618X
10KFAR14MVX	M28-C6-BK00	910-000102-020	RAPEA620X
10KFAW13MVX	M28-C6-BK00	910-000102-025	RAPG010BX
10KFAW13MVXSL	M28-C6-CG00	910-000102-028	RAPG106.4X
10KFAW17MVX	M28-C6-CG00	910-000102-037	RAPG106X
10KFAW17MVXSL	M28-C6-CH00	910-000102-038	RAPG108X
10KFIW13MVX	M28-C6-CH00	910-000102-039	RAPG109.5X
10KFIW17MVX	M28-C6-CK00	910-000102-040	RAPG110X
10KFTF09MVX	M28-C6-CK00	910-000102-043	RAPG112X
10KFTF09MVXSL	M28-C6-CKR0	910-000102-044	RAPG208X
10KFTH09MVX	M28-C6-CKR0	910-000102-052	RAPG210X
10KFTH09MVXSL	M28-C6-CL00	910-000102-055	RAPG212.7X
10KFTR09MVX	M28-C6-CL00	910-000102-056	RAPG212X
10KFTR09MVXSL	M28-C6-DG00	910-000103-001	RAPG213.5X
10KFUK125MVX	M28-C6-DG00	910-000103-003	RAPG214X
10KFUK500MVX	M28-C6-DK00	910-000103-004	RAPG215BX
10KRAW33IW33	M28-C6-DK00	910-000103-007	RAPG215X
10KRAW33IW33	M28-C6-DKM0	910-000103-008	RAPG216X
10KRAW33IW3390	M28-C6-DKM0	910-000103-013	RAPG217.2X
10L5NMLS	M28-C6-DLM0	910-000103-015	RAPG218X
10L5NRMS	M28-C6-DLM0	910-000103-016	RAPG319X
10M1212N6	M28LCFX	910-000103-019	RAPG320X
10M1212NQ	M28LCFXBP	910-000103-020	RAPG321.3X
10M1216N6	M28LEODURX	910-000103-025	RAPG322X
10M124E8	M28LEODURXBP	910-000103-026	RAPG323X
10M124N2	M28LMSX	910-000103-027	RAPG325BX
10M124N3	M28LSTOSSCFX	910-000103-028	RAPG325X
10M124N6	M28LX	910-000103-031	RAPG426.9X
10M124N8	M2B12716B20NB	910-000103-032	RAPG428X
10M126N2	M2B12716S30NV	910-000103-038	RAPG430X
10M126N3	M2B16916B20NB	910-000103-040	RAPG520X
10M126N6	M2B33916S20NB	910-000103-044	RAPG522X
10M128E8	M2G011C2	910-000103-047	RAPG525X
10M128N2	M2G011C2	910-000103-048	RAPG528X
10M129N3	M2H-20	910-000103-049	RAPG530X
10M129N6	M2MSC1/8BR-316	910-000103-061	RAPG532X
10M14F87OMXS	M2MSC1/8K-316	910-000103-077	RAPG533.7X
10M1612N6	M2MSC1/8N-316	910-000200-001	RAPG535X
10M1616N6	M2MSC1/8R-316	910-000200-002	RAPG538X

10M166N2	M2MTC1/8N-316	910-000200-003	RAPG540X
10M166N3	M30-04-000	910-000200-004	RAPG542X
10M166N6	M30-04-000	910-000200-005	RAPG644.5X
10M168N2	M30-04-F00	910-000200-006	RAPG648X
10M169N3	M30-04-F00	910-000200-007	RAPG650.8X
10M169N6	M30-04-M00	910-000201-003	RAPG650X
10M16F82EDMLOS	M30-04-M00	910-000202-004	RAPG652X
10M18C87OMLOS	M30-06-F00	9101 14 13	RAPG655X
10M18C87OMXS	M30-06-F00	9101 14 17	RAPG657X
10M18C87OMXSBP	M30-06-FS0	9101 14 21	RAPS540X
10M18C8OMLOS	M30-06-FS0	9101 18 13	RAS600S1
10M18C8OMXS	M30-06-M00	9101 18 17	RAS600S3
10M18C8OMXSVIT	M30-06-M00	9101 18 21	RAS600S5
10M18F682EDMXS	M30-08-000	9101 23 13	RAVG104X
10M18F687OMXS	M30-08-000	9101 23 17	RAVG106.4X
10M18F82EDMLOS	M30-08-M00	9101 23 21	RAVG106X
10M18F82EDMXS	M30-08-M00	9101 24 13	RAVG108X
10M18F82EDMXSS	M30201NIT-SS	9101 24 17	RAVG109.5X
10M18F82EDMXSV	M30201-SS	9101 24 21	RAVG110X
10M18F87OMLOS	M30202NIT-SS	9101 26 10	RAVG112X
10M18F87OMXS	M30202-SS	9101 26 13	RAVG206X
10M18F87OMXSS	M30203NIT-SS	9101 26 17	RAVG208X
10M18F87OMXSV	M30203-SS	9101 26 21	RAVG210X
10M18F8OMXS	M30204NIT-SS	9101 30 13	RAVG212.7X
10M18F8OMXSS	M30204-SS	9101 30 17	RAVG212X
10M18R87OMXS	M30206NIT-SS	9101 30 21	RAVG213.5X
10M18S87OMXS	M30206-SS	910289-10S	RAVG214X
10M18V87OMXS	M30208NIT-SS	910289-12S	RAVG215X
10M18V8OMLOS	M30208-SS	910289-14S	RAVG216X
10M1SC10-316	M30209-SS	910289-16S	RAVG217.2X
10M20C8OMXS	M30212-SS	910289-20S	RAVG218X
10M20F8OMXS	M308-4526	910289-25S	RAVG319X
10M22C87OMLOS	M308-4526	910289-30S	RAVG320X
10M22C87OMXS	M30-C4-000	910289-38S	RAVG321.3X
10M22C87OMXSBP	M30-C4-000	910289-6S	RAVG322X
10M22C8OMLOS	M30-C4-F00	910289-8S	RAVG323X
10M22C8OMXS	M30-C4-F00	910290-10L	RAVG325X
10M22F682EDMLS	M30-C4-FM0	910290-12L	RAVG426.9X
10M22F682EDMXS	M30-C4-FM0	910290-15L	RAVG428X
10M22F682EDMXSS	M30-C4-MX0	910290-18L	RAVG430X
10M22F687OMLS	M30-C4-MX0	910290-22L	RAVG520X
10M22F687OMXS	M30-C4-P00	910290-28L	RAVG522X
10M22F687OMXSBP	M30-C4-P00	910290-42L	RAVG525X
10M22F687OMXSS	M30-C4-X00	910290-6L	RAVG528X
10M22F68OMXS	M30-C4-X00	910290-8L	RAVG530X
10M22F82EDMLOS	M30-C6-000	910291-10MM	RAVG532X
10M22F82EDMLOSCAP	M30-C6-000	910291-12MM	RAVG533.7X
10M22F82EDMLOSS	M30-C6-FM0	910291-14MM	RAVG535X
10M22F82EDMXS	M30-C6-FM0	910291-15MM	RAVG538X
10M22F82EDMXSS	M30-C6-M00	910291-16MM	RAVG540X
10M22F87OMLOS	M30-C6-M00	910291-18MM	RAVG542X
10M22F87OMLOSS	M30-C6-MX0	910291-20MM	RAVG6-319
10M22F87OMLOSV	M30-C6-MX0	910291-22MM	RAVG6-323

10M22F87OMXS	M30-C8-000	910291-25MM	RAVG6-430
10M22F87OMXSBPNB	M30-C8-000	910291-28MM	RAVG644.5X
10M22F8OMXS	M30-C8-F00	910291-6MM	RAVG645X
10M22F8OMXSV	M30-C8-F00	910291-8MM	RAVG648X
10M22R87OMLOS	M30-C8-FM0	9105 13 13	RAVG650.8X
10M22R87OMXS	M30-C8-FM0	9105 13 17	RAVG650X
10M22R8OMLOS	M30-C8-FS0	9105 13 21	RAVG652X
10M22RHV82EDMLOSCF	M30-C8-FS0	9105 17 13	RAVG6-538
10M22S87OMXS	M30-C8-MS0	9105 17 17	RAVG655X
10M22V87OMLOS	M30-C8-MS0	9105 17 21	RAVG657X
10M22V87OMXS	M30-C8-MX0	9105 19 13	RAVG6-650
10M22V8OMXS	M30-C8-MX0	9105 19 17	RB1
10M26C8OMXS	M30-C8-S00	9105 19 21	RB16X2
10M26F82EDMLOS	M30-C8-S00	9105 22 13	RB16X271
10M27F87OMLOS	M30-C8-X00	9105 22 17	RB16X2CF
10M27F87OMXS	M30-C8-X00	9105 22 21	RB16X371
10M27F87OMXSBPNB	M30SCFX	9109001A	RB18X1.5
10M28N2	M30SCFXBP	9109001A	RB18X1.571
10M412B8	M30SEODURX	9109001N	RB18X1.5CF
10M412B8-OP	M30SMSX	9109001N	RB2
10M412D8	M31-08-000	9109004A	RB20X2
10M48N2	M31-08-000	9109004A	RB20X2.5
10M612B8	M31-C6-000	9109007A	RB20X2.571
10M612B8-OP	M31-C6-000	9109007A	RB20X2.5CF
10M612D8	M31-C6-F00	9109011N	RB20X271
10M616B8	M31-C6-F00	9109011N	RB20X2CF
10M616D8	M31-C6-FM0	9109021N	RB22X1.5
10M68N2	M31-C6-FM0	9109021N	RB22X1.5CF
10M74E8	M31-C6-FS0	9109024N	RB22X2
10M812D8	M31-C6-FS0	9109024N	RB22X271
10M812N8	M31-C6-M00	9109041N	RB22X2CF
10M816D8	M31-C6-M00	9109041N	RB25X2
10M82D8	M31-C6-MX0	9109051N	RB25X2.5
10M84D8	M31-C6-MX0	9109051N	RB25X2.571
10M86D8	M31-C6-X00	9109069N	RB25X2.5CF
10M88D8	M31-C6-X00	9109069N	RB25X2CF
10M88N2	M31-C8-000	9109098A	RB25X3
10M912B8	M31-C8-000	9109098A	RB25X371
10M912B8-OP	M31-C8-F00	9109177N	RB25X3CF
10M916B8	M31-C8-F00	9109177N	RB28X1.5
10M916B8-OP	M31-C8-FM0	9109200-4P	RB28X1.571
10M94E8	M31-C8-FM0	9109200-4P	RB28X1.5CF
10M96E8	M31-C8-FS0	9109201A	RB28X2
10M98E8	M31-C8-FS0	9109201A	RB28X271
10MA8N-316	M31-C8-M00	9109204A	RB28X2CF
10MAH6B4	M31-C8-M00	9109204A	RB28X3
10MAH9P12	M31-C8-X00	911-000002-003	RB28X3CF
10MAL2P2	M31-C8-X00	911-000002-004	RB3
10MAL8L8	M32-08-F00	911-000002-005	RB3-02-D0Z0
10MAM12P12	M32-08-F00	911-000002-006	RB3-02-D0Z0
10MAM12P4	M32-C8-000	911-000002-010	RB3-02-F000
10MAM16P12	M32-C8-000	911-000002-011	RB3-02-F000
10MAM16P16	M32-C8-F00	911-000002-013	RB3-02-F0Z0

10MAM4B4	M32-C8-F00	911-000002-014	RB3-02-F0Z0
10MAM9P16	M32-C8-FS0	911-000002-015	RB3-02-R000
10MAP12J12	M32-C8-FS0	911-000002-019	RB3-02-R000
10MAP12P12	M32-CA-F00	911-000002-020	RB3-02-R0Z0
10MAP12P16	M32-CA-F00	911-000002-021	RB3-02-R0Z0
10MAP12RH12	M32-CA-FS0	911-000002-027	RB3-02-W000
10MAP12RH16	M32-CA-FS0	911-000003-001	RB3-02-W000
10MAP16RH16	M33005	911-000003-003	RB3-02-W0Z0
10MAP16RH21	M33005	911-000003-006	RB3-02-W0Z0
10MAP4J4	M337-0221	911-000003-010	RB30X2.5
10MAP6J8	M337-0221	911-000003-011	RB30X2.5CF
10MAP8J12	M337-0222	911-000003-012	RB30X3
10MAP8P16	M337-0222	911-000003-013	RB30X371
10MAP8P8-SOG	M337-0223	911-000003-014	RB30X3CF
10MAQ12P12	M337-0223	911-000003-015	RB30X4
10MBC8N-316	M337-0224	911-000003-018	RB30X471
10MBT8N-316	M337-0224	911-000003-020	RB30X4CF
10MFP140SA10Q1EUR	M337-0225	911-000003-021	RB35X2
10MFP140SA10Q1EURPD	M337-0225	911-000003-022	RB35X271
10MFP140SA10Q1UK	M337-0228	911-000003-023	RB35X2CF
10MRT8N-316	M337-0228	911-000003-024	RB35X3
10MSC12N-316	M337-1911	911-000003-027	RB35X3CF
10MSC12N-MMX	M337-1911	911-000005-001	RB38X2.5CF
10MSC6N-316	M33BUWS	911-000005-002	RB38X3
10MSC8N-316	M33RR	911-000005-003	RB38X3CF
10MSC8N-B	M33X2-6H-TAP	911-000005-004	RB38X4
10MSC8N-MMX	M35-0C-000	911-000005-005	RB38X471
10MSCM18X1.5-316	M35-0C-000	911-000005-006	RB38X4CF
10MSEL12N-316	M3516-5	911-000005-010	RB38X5
10MSEL6N-316	M3516-5	911-000005-011	RB38X5CF
10MSEL8N-316	M35-CC-000	911-000005-012	RB3-C1-C0B0
10MSEL8N-B	M35-CC-000	911-000005-013	RB3-C1-C0B0
10MX1212K8	M35-CC-F00	911-000005-014	RB3-C1-F000
10MX1212K8-OP	M35-CC-F00	911-000005-015	RB3-C1-F000
10MX1216K8	M35-CC-X00	911-000005-019	RB3-C1-R000
10MX1216K8-OP	M35-CC-X00	911-000005-021	RB3-C1-R000
10MX1612K8	M35LCFX	911-000005-022	RB3-C1-W000
10MX1612K8-OP	M35LCFXBP	911-000005-023	RB3-C1-W000
10MX1616K8	M35LEODURX	911-000005-027	RB3-C2-C000
10MX1616K8-OP	M35LMSX	911-000005-028	RB3-C2-C000
10MX412K8	M35LSTOSS71X	911-000006-001	RB3-C2-C0B0
10MX612K8	M35LSTOSSCFX	911-000006-003	RB3-C2-C0B0
10MX616K8	M36-CC-F00	911-000006-006	RB3-C2-D000
10MX912K8	M36-CC-F00	911-000006-009	RB3-C2-D000
10MX912K8-OP	M36-CC-S00	911-000006-010	RB3-C2-D0B0
10MX916K8	M36-CC-S00	911-000006-011	RB3-C2-D0B0
10MX916K8-OP	M36-CC-X00	911-000006-012	RB3-C2-F000
10N40	M36-CC-X00	911-000006-013	RB3-C2-F000
10N40-316	M38S31B71X	911-000006-015	RB3-C2-F0B0
10N60	M38SCFX	911-000006-018	RB3-C2-F0B0
10N60-316	M38SCFXBP	911-000006-019	RB3-C2-F0T0
10NU10-316	M38SEODURX	911-000006-020	RB3-C2-F0T0
10NU10-B	M38SMSX	911-000006-021	RB3-C2-F0Z0

10P12071	M39-06-CH00	911-000006-022	RB3-C2-F0Z0
10P12072	M39-06-CH00	911-000006-023	RB3-C2-P000
10P16071	M39-08-CL00	911-000006-024	RB3-C2-P000
10P16081	M39-08-CL00	911-000006-027	RB3-C2-R000
10P5ONMSS	M39-C8-CH00	911-000006-028	RB3-C2-R000
10PNMK4S	M39-C8-CH00	911-000008-003	RB3-C2-W000
10PNMK4SS	M39-C8-CL00	911-000008-004	RB3-C2-W000
10PNMLOSS	M39-C8-CL00	911-000008-005	RB3-C2-Y000
10PNMTXS	M3A-B2LJ2-SSP	911-000008-006	RB3-C2-Y000
10PNMTXSS	M3A-B2LJ2-V-SSP	911-000008-007	RB4
10R3MXS	M3A-B2LJ-SSP	911-000008-010	RB42X2
10R4OMLOS	M3A-B2LJ-V-SSP	911-000008-011	RB42X271
10R4OMXS	M3A-B2XJ2-SSP	911-000008-012	RB42X2CF
10R6MK4S	M3A-B2XJ2-V-SSP	911-000008-013	RB42X3
10R6MLOS	M3A-B2XJ-SSP	911-000008-014	RB42X371
10R6MXS	M3A-B2XJ-V-SSP	911-000008-015	RB42X3CF
10R6MXSBP	M3A-H0L-BN-SS-K	911-000008-016	RB42X4
10RHDMLOSCF	M3A-H0L-EPR-SS-TC	911-000008-017	RB50X6
10RHDMTXSCF	M3A-H0L-V-SS-K	911-000008-018	RB65X8
10RHV42EDMXS2BCF	M3A-H0L-V-SS-TC	911-000008-019	RBAG-XCN
10RHV42EDMXSCF	M3A-H0L-V-SS-TC-C3	911-000008-020	RBN106.4X
10RHV5OMLOSCF	M3A-H1L-EPR-SS-TC	911-000008-021	RBN106X
10RHV5OMXSCF	M3A-H1L-V-SS-K	911-000008-023	RBN108.5/06.4X
10RHZ42EDMLOSCF	M3A-H1L-V-SS-TC	911-000008-024	RBN108X
10RU4-316	M3A-H3L-EPR-SS-K	911-000008-025	RBN109.5X
10RU4-316	M3A-H3L-V-SS-K	911-000008-027	RBN110/08X
10RU6-316	M3A-H3L-V-SS-TC	911-000008-028	RBN110/106.4X
10RU8-316	M3A-H4L-V-SS-K	911-000008-031	RBN1-108
10RVP9072	M3A-H6L-V-SS-K	911-000008-034	RBN110FHX
10RVP9072-CE	M3A-MB2LPFA-SSP	911-000009-002	RBN110X
10RVP9072-HT	M3A-MB2LPFA-SSP-C3	911-000009-003	RBN1-112
10RVS9072	M3A-MB2XPFA-SSP	911-000009-004	RBN112/06X
10RVS9072-CE	M3A-NSA-BN-B-K	911-000009-006	RBN112/08X
10S3MXS	M3A-NSA-V-SS-K	911-000009-009	RBN112X
10S4OMLOS	M3A-NSA-V-SS-V	911-000009-010	RBN1-216
10S4OMLOSV	M3A-NSL-BN-B-K	911-000009-011	RBN1-320
10S4OMXS	M3A-NSL-BN-SS-K	911-000009-012	RBN1-538
10S4OMXSS	M3A-NSL-V-SS-K	911-000009-013	RBN1-542
10S5OMXS	M3A-NSL-V-SS-V	911-000009-014	RBN212.7X
10S6MK4S	M3A-V4LK-SS	911-000009-015	RBN213.5X
10S6MLOS	M3A-V4LN-SS	911-000009-016	RBN214X
10S6MXS	M3A-V4LR-SS	911-000009-017	RBN215X
10SBAM14MVX	M3CU2-316	911-000009-018	RBN216/12X
10SBAW13MVN	M3FA1/8N-316	911-000009-020	RBN216X
10SC10-316	M3FA1/8R-316	911-000009-021	RBN217.2X
10SC10-B	M3FSC1/4K-316	911-000009-022	RBN218/12X
10SC10-MMX	M3FSC1/4N-316	911-000009-023	RBN218X
10SFAM08MXX	M3FSC1/8K-316	911-000009-024	RBN319X
10SFAM08RXX	M3FSC1/8N-316	911-000009-026	RBN320X
10SFAM10MXX	M3GC1/4R-316	911-000009-027	RBN321.3/16X
10SFAM10RXX	M3MA1/4N-316	911-000009-028	RBN321.3X
10SFAM12MXX	M3MA1/8N-316	911-000009-034	RBN322X
10SFAM14MXX	M3MA1/8R-316	911-000009-035	RBN325X

10SFAR10MXN	M3MSC1/2N-316	9114 13 13	RBN426.9X
10SFAR10MXX	M3MSC1/4K-316	9114 13 17	RBN428X
10SFAR13MXN	M3MSC1/4K-B	9114 13 21	RBN430X
10SFAW10MXN	M3MSC1/4N-316	9114 14 13	RBN532/15X
10SFAW10RXX	M3MSC1/4N-B	9114 14 17	RBN532X
10SFAW13MXN	M3MSC1/4N-NNR	9114 14 21	RBN533.7X
10SFAW13RXX	M3MSC1/4R-316	9114 17 13	RBN535X
10SFAW17MXN	M3MSC1/8BR-316	9114 17 17	RBN538X
10SFIW10MXN	M3MSC1/8K-316	9114 17 21	RBN542X
10SFIW13MXN	M3MSC1/8N-316	9114 18 13	RBNG109.5X
10SFTF09MXX	M3MSC1/8R-316	9114 18 17	RBNG322X
10SLC1-A-25	M3MSC1/8R-B	9114 19 13	RBNG325X
10SLC1-A-50	M3MSC1/8R-ED-316	9114 19 17	RBNG428X
10SLC2-A-150	M3MSEL1/4K-316	9114 19 21	RBNG430X
10SLC2-B-150	M3MSEL1/4N-316	9114 22 13	RBNG538X
10SLC3-A-150	M3MSEL1/4N-316-OXY	9114 22 17	RBNGS219/9.5X
10SLC3-B-150	M3MSEL1/8K-316	9114 22 21	RBP106.4X
10SLC3-B-75	M3MSEL1/8N-316	9114 23 13	RBP106X
10SM12071	M3MTC1/4N-316	9114 23 17	RBP108/106X
10SM16071	M3MTC1/8N-316	9114 23 21	RBP108X
10SM16073	M3MTC1/8R-316	9114 24 13	RBP109.5X
10SM16081	M3PCM6-316	9114 24 17	RBP1-106
10SM16872	M3RUM2-316	9114 24 21	RBP1-108
10SM9071	M3TURM2-316	9114 26 13	RBP1-109.5
10SM9072	M3TURM6-316	9114 26 17	RBP110C20X
10SM9081	M4004074	9114 26 21	RBP110X
10SM9872	M4004X028180	9114 30 13	RBP1-110
10SM9882	M4004X035180	9114 30 17	RBP1-112
10TT4LS	M4004X035180LHP	9114 30 21	RBP112/106X
10TT4MXS	M4004X049180	9115R	RBP112/108X
10TT4MXSS	M4004X049180LHP	911-N6-H6	RBP112/110X
10TTP4LS	M4004X1180CO	911-O10-H10	RBP112X
10TTP4MXS	M4006074	911-O10-H12	RBP1-212.7
10TUR4-316	M4006074SMC17	911-O10-H6	RBP1-214
10TUR6-316	M4006074SMC35	911-O8-H8	RBP1-215
10TUR8-316	M4006X035180	911-W10-N8	RBP1-216
10V2071	M4006X049180	912-000001-001	RBP1-218
10V2071-GY	M4006X049180LHP	912-000001-002	RBP1-319
10V2071-HC	M4006X065180	912-000001-003	RBP1-320
10V2071-TG	M4006X065180LHP	912-000001-004	RBP1-322
10V2072	M4006X1180CO	912-000001-005	RBP1-325
10V2073	M4007406M	912-000001-006	RBP1-428
10V2074	M4007408M	912-000001-007	RBP1-430
10V2075	M4007408MKU	912-000001-008	RBP1-532
10V2081	M4007410.2MSS	912-000001-009	RBP1-535
10V2081-TG	M4007410M	912-000001-010	RBP1-538
10V2082	M4007410SMC14	912-000001-011	RBP210BX
10V2083	M4007412M	912-000001-012	RBP212.7X
10V2084	M4007414M	912-000001-017	RBP213.5BX
10V2085	M4007415M	912-000001-018	RBP213.5X
10V2085-TG	M4007416M	912-000001-019	RBP214X
10V2872	M4007416MD	912-000001-020	RBP215/12BX
10V2882	M4007418M	912-000001-021	RBP215/212X

10V3MXS	M4007420M	912-000001-022	RBP215BX
10V4071	M4007422M	912-000001-023	RBP215X
10V4071-B	M4007425M	912-000001-024	RBP216BX
10V4071-GY	M4007428M	912-000001-025	RBP216X
10V4071-PM	M4007428MSS	912-000001-026	RBP217.2X
10V4071-TG	M4007430M	912-000001-028	RBP218/15BX
10V4072	M4007432M	912-000001-029	RBP218BX
10V4073	M4007435M	912-000001-031	RBP218X
10V4074	M4007435MSS	912-000001-034	RBP3-108
10V4075	M4007438M	912-000002-001	RBP3-110
10V4081	M4007442M	912-000002-002	RBP3-112
10V4081-B	M4008074	912-000002-003	RBP319X
10V4081-TG	M4008074SMC17	912-000002-004	RBP320/15X
10V4082	M4008074SMC25	912-000002-005	RBP320X
10V4083	M4008074SMC48	912-000002-008	RBP321.3X
10V4084	M4008074SMCD	912-000004-001	RBP3-212.7
10V4085	M4008X035180	912-000004-002	RBP3-216
10V4882	M4008X049180	912-000004-003	RBP3-218
10V4OMLOS	M4008X049180LHP	912-000004-005	RBP322/15X
10V4OMXS	M4008X065180	912-000004-006	RBP322/20X
10V4OMXSBP	M4008X065180LHP	912-000004-007	RBP322X
10V5OMXS	M4008X083180	912-000004-008	RBP325/19X
10V6071	M4008X083180LHP	912-000005-002	RBP325/20X
10V6071-GY	M4008X1180CO	912-000005-007	RBP325X
10V6072	M4010074	912-000005-008	RBP3-320
10V6073	M4010X065180	912-000005-010	RBP3-322
10V6074	M4010X065180LHP	912-000005-011	RBP3-325
10V6075	M4010X083180	912-000005-014	RBP3-426.9
10V6081	M4010X083180LHP	912-000502-001	RBP4-110
10V6081-GY	M4012074	912-000602-106	RBP4-112
10V6082	M4012X049180	912-000604-606	RBP4-212.7
10V6083	M4012X065180	912-000606-107	RBP4-216
10V6085	M4012X065180LHP	912-000703-210	RBP426.9X
10V6872	M4012X083180	912-000704-210	RBP428X
10V6882	M4012X083180LHP	912-000705-210	RBP430/20X
10V6MLOS	M4012X095180	91213202SXZ	RBP430X
10V6MXS	M4012X120180	91213202SXZ	RBP4-320
10V6MXSBP	M4016074	91213206SXZ	RBP4-428
10V8071	M4016074SMC29	91213206SXZ	RBP5-106
10V8071-GY	M4016074SMC48	91213208SXZ	RBP5-110
10V8072	M4016X065180	91213208SXZ	RBP5-215
10V8073	M4016X095180	91213210SXZ	RBP5-218
10V8074	M4016X095180LHP	91213210SXZ	RBP532X
10V8075	M4016X120180	912132BPSXZ	RBP533.7X
10V8081	M4018006X1.5M	912132BPSXZ	RBP535X
10V8081-GY	M4018006X1.5MSS	9121594805X	RBP538X
10V8082	M4018006X1M	9121594805X	RBP542/38X
10V8084	M4018006X1MLHP	9121594806X	RBP542X
10V8872	M4018006X1MSS	9121594806X	RBP8-325
10VN1010MXX	M4018008X1.5M	9121594807X	RBP8-428
10VN1310MXX	M4018008X1.5MLHP	9121594807X	RBPBG110X
10VNXX063MXX	M4018008X1.5MSS	9121594808X	RBPG106.4X
10VNXX10MXX	M4018008X1M	9121594808X	RBPG106X

10VNXX12MXX	M4018008X1MLHP	9121594809X	RBPG108X
10VNXX24MXX	M4018008X1MSS	9121594809X	RBPG109.5X
10VNXX36MXX	M4018008X1R06M	9121594812X	RBPG110BX
10VRMM2812	M4018008X1R06MSS	9121594812X	RBPG110X
10VRMM2812-GY	M4018010.3X2.4MINCO	9123 13 08	RBPG112BX
10VRMM2812-TG	M40180102X16MSS	9123 13 10	RBPG112X
10VRMM2812TGC10	M40180102X20MSS	9123 13 13	RBPG212.7X
10WEMLOS	M4018010X1.2M	9123 14 06	RBPG213.5X
10WEMLOWLNMLS	M4018010X1.5M	9123 14 08	RBPG214X
10WEMTXWLNMS	M4018010X1.5MLHP	9123 14 09	RBPG215X
10WLNMLS	M4018010X1.5MSS	9123 14 10	RBPG216X
10WLNMS	M4018010X1M	9123 14 13	RBPG217.2X
10WMK4WL4NMS	M4018010X1MKU	9123 17 06	RBPG218X
10WMLOS	M4018010X1MLHP	9123 17 08	RBPG319X
10WMLOWLNMLS	M4018010X1MSS	9123 17 10	RBPG320X
10WMTXS	M4018010X2M	9123 18 06	RBPG321.3X
10WMTXWLNMB	M4018010X2MLHP	9123 18 08	RBPG322/13.5X
10WMTXWLNMS	M4018010X2MSS	9123 18 10	RBPG322X
10WMTXWLNMSS	M4018012-10X1.5M	9123 19 06	RBPG323/16X
10XASC10-316	M4018012X1.5M	9123 19 08	RBPG323X
10Z3GSK25N100	M4018012X1.5MLHP	9123 19 10	RBPG325/19X
10Z3GSK25N100	M4018012X1.5MSS	9123 22 06	RBPG325X
1-1 CBZ-SS	M4018012X1.6MSS	9123 22 08	RBPG426.9X
1-1 EBZ-SS	M4018012X1M	9123 22 10	RBPG428/22X
1-1 FBZ7-SS	M4018012X1MLHP	9123 23 06	RBPG428X
1-1 FBZ-SS	M4018012X1MSS	9123 23 08	RBPG430/20X
1-1 FH4BZ-SS	M4018012X2M	9123 23 10	RBPG430X
1-1 FLZ7-SS	M4018012X2MSS	9123 24 06	RBPG532/530X
1-1 GBZ-SS	M4018013.7X3MINCO	9123 24 08	RBPG532X
1-1 HBZ-B	M40180135X20MSS	9123 24 10	RBPG533.7X
1-1 HBZ-SS	M40180135X29MSS	9123 30 08	RBPG535X
1-1 MHN-SS	M4018014X1.5M	9123 30 10	RBPG538X
1-1 SE-SS	M4018014X2M	9123 30 13	RBPG542X
1-1 WBZ-SS	M4018015X1.5M	9123861712/S	RBPL4/6-1/4
1-1 Z7HBZ7-SS	M4018015X1.5MSS	9123861712/S	RBPL4/6-1/8
1-1 Z7HLZ7-SS	M4018015X1M	91263676-1453	RBPL6/8-1/4
1-1/2BSPBUWS	M4018015X1MSS	91263676-1453	RBVG106.4X
11/2GG44MS	M4018015X2M	91263676-603	RBVG106X
11/2HPMSS	M4018016X1.5M	91263676-603	RBVG108X
11/2X1/2PTRMSS	M4018016X1.5MLHP	91263676-803	RBVG109.5X
11/2X1PTRMSS	M4018016X1.5MSS	91263676-803	RBVG110X
11/2X3/4PTRMSS	M4018016X1M	91263697-2032	RBVG112X
1-1/4BSPBUWS	M4018016X2.5M	91263697-2032	RBVG212.7X
11/4FFMSS	M4018016X2.5MSS	9126510240/S	RBVG213.5X
11/4GG44MS	M4018016X2M	9126510240/S	RBVG214X
11/4HPMSS	M4018016X2MLHP	91265175-100	RBVG215X
11/4L4NMS	M4018016X2MSS	91265175-100	RBVG216X
11/4X1/2PTR34BL	M4018016X3MSS	9126535102/S	RBVG217.2X
11/4X1/2PTRMSS	M4018017.1X3.2MINCO	9126535102/S	RBVG218X
11/4X1PTRMSS	M40180172X23MSS	9127113302X	RBVG319X
11/4X3/4PTRMSS	M40180172X29MSS	9127113302X	RBVG320X
1100 A	M4018018X1.5M	9127113303X	RBVG321.3X
1100 A	M4018018X1.5MSS	9127113303X	RBVG322X

1100 AUV	M4018018X1M	9128919007/S	RBVG325X
1100 N	M4018018X2M	9128919007/S	RBVG426.9X
1100 N	M4018020X1.5M	9128981602/S	RBVG428X
1100 NA	M4018020X2.5M	9128981602/S	RBVG430X
1100 NA	M4018020X2.5MLHP	9128981612/S	RBVG532X
1100 NV	M4018020X2.5MSS	9128981612/S	RBVG533.7X
1100 NV	M4018020X2M	9128981613/S	RBVG535X
1100 UV	M4018020X2MLHP	9128981613/S	RBVG538X
1100 UV	M4018020X2MSS	9128981615/S	RBVG542X
1100 V	M4018020X3M	9128981615/S	RBZ 10-1/2-10-SS
1100 V	M4018021.3X3.7MINCO	9128981616/S	RBZ 10-1/4-10-SS
11001-00090	M40180213X36MSS	9128981616/S	RBZ 12-1/2-12-SS
11001-00090	M4018022X1.5M	913-O10-H10	RBZ 12-1/4-12-SS
11002-00165	M4018022X1.5MSS	913-O8-H6	RBZ 12-3/8-12-SS
11002-00165	M4018022X1M	913-O8-H8	RBZ 6-1/4-6-SS
11002-02250	M4018022X2.5M	914-111051-000	RBZ 6-1/8-6-SS
11002-02250	M4018022X2M	914-111051-001	RBZ 8-1/4-8-SS
11004M-N	M4018025X1.5M	914-111051-002	RC2
11006-01300	M4018025X2.5M	914-111051-003	RCA106X
11006-01300	M4018025X2.5MLHP	914-111052-000	RCA108X
11006-02000	M4018025X2.5MSS	914-111121-000	RCA110X
11006-02000	M4018025X2M	914-111122-000	RCA1-112
11006-QC	M4018025X2MSS	914-111241-000	RCA1-116
11006-QC	M4018025X3M	914-111242-000	RCA112.7X
11007M-N	M4018025X3MLHP	914-171052-000	RCA112X
1100-9446-C	M4018025X3MSS	914-171121-000	RCA113.5X
1100H56 01	M4018025X4M	914-221051-000	RCA114X
1100H56 02	M4018026.7X3.9MINCO	914-221052-000	RCA115X
1100H56 03	M40180269X36MSS	914-221121-000	RCA116X
1100H56 04	M4018028X2.5M	914-221122-000	RCA117.2X
1100H60 01	M4018028X2M	914-221241-000	RCA118X
1100H60 02	M4018028X2MSS	914-221242-000	RCA1-220
1100H60 03	M4018028X3M	914-232053-000	RCA1-225
1100H60 04	M4018030X2.5M	914-232123-000	RCA219X
1100H62 01	M4018030X2M	914-232243-000	RCA220X
1100H62 02	M4018030X3M	914-242053-000	RCA221.3X
1100H62 03	M4018030X3MSS	914-242123-000	RCA2-221.3
1100H62 04	M4018030X4M	914-242243-000	RCA222X
1100P00 00 03	M4018032X1.5M	914-251241-000	RCA223X
1100P00 00 04	M4018032X3M	914-252053-000	RCA225X
1100P03 00 18	M4018032X4M	914-252123-000	RCA226.9X
1100P04 00	M4018033.4X4.5MINCO	914-252243-000	RCA228X
1100P04 00 27	M40180337X45MSS	914-261051-000	RCA230X
1100P04 01	M4018035X2.5M	914-261052-000	RCA330X
1100P04 01 27	M4018035X3M	914-261121-000	RCA332X
1100P04 02	M4018038X2M	914-261122-000	RCA333.7X
1100P04 02 27	M4018038X3M	914-261241-000	RCA335X
1100P04 03	M4018038X3MSS	914-261242-000	RCA338X
1100P04 03 27	M4018038X4M	914-311051-000	RCA340X
1100P04 04	M4018038X4MSS	914-311052-000	RCA342X
1100P04 04 27	M4018038X5M	914-311121-000	RCA438X
1100P04 05	M4020074	914-311122-000	RCA440X
1100P04 05 27	M4020X120180	914-311241-000	RCA442X

1100P04 06	M40400Y	914-311242-000	RCA445X
1100P04 06 27	M40400Y	914-332053-000	RCA448.3X
1100P04C00	M40RESTBOLT	914-332123-000	RCA450X
1100P04C00 27	M40SCREWL25	914-332243-000	RCA451X
1100P04C01	M40ZYLBOLT	914-342053-000	RCA452X
1100P04C01 27	M4167776	914-342123-000	RCA455X
1100P04C04	M4167908	914-342243-000	RCA457X
1100P04C04 27	M4167936	914-352053-000	RCA460.3X
1100P04R00	M4167937	914-352123-000	RCA463X
1100P04R01	M4167938	914-352243-000	RCA465X
1100P04R02	M4167939	914-361051-000	RCA470X
1100P04R02 27	M4167940	914-361052-000	RCA570X
1100P04R03	M4167941	914-361121-000	RCA573X
1100P04R04	M4167953	914-361122-000	RCA575X
1100P04V01	M4167954	914-361241-000	RCA576.1X
1100P04V02	M4167955	914-361242-000	RCA580X
1100P04V03	M4167956	918-MO16	RCA582.5X
1100P04V04	M4167973	918-N4	RCA588.9X
1100P05 00 33	M4201	919-10	RCA590X
1100P05 01 33	M42LCFX	919-12	RCA6101.6X
1100P05 04 33	M42LCFXBP	919-16	RCA6108X
1100P06 00	M42LEODURX	919-4	RCA6114.3X
1100P06 01	M42LMSX	919-5	RCA690X
1100P06 02	M42LSTOSSCFX	919-6	RCA7127X
1100P06 03	M42M33F87OHG87MS	919-8	RCA7133X
1100P06 04	M42RR	919U-4	RCA7140X
1100P06 05	M42X2-6H-TAP	919U-6	RCA7150X
1100P06 06	M43303B	91KAAM05MPN	RCA7168.3X
1100P06C00	M43303B	91KAAM05MPX	RCA8168.3X
1100P06C01	M43303C	91KAAW10MPN	RCA8219.1X
1100P06C04	M43303C	91KAAW10MPX	RCB4401
1100P06R00	M43303H	91KAIM05MPN	RCB6601
1100P06R01	M43303H	91KAIM05MPX	RCB9901
1100P06R02	M43303L	91KAIW10MPX	RCB9901-SOG
1100P06R03	M43303L	91KAKO06MPN	RCKO4400
1100P06R04	M43303R	91KATF04MPN	RCKO6600
1100P06V01	M43303R	91KATF04MPX	RCKO9900
1100P06V02	M43303T	920-000014-007	RCKO9900-SOG
1100P06V04	M43303T	920-000014-010	RCKO9900-TO
1100P08 00	M43-CE-X00	920-000014-013	RCN106X
1100P08 00 55	M43-CE-X00	920-000014-016	RCN108X
1100P08 01	M4410-DM	920-000015-003	RCN110X
1100P08 02	M4412-DM	920-000015-007	RCN112.7X
1100P08 03	M4424	920-000015-010	RCN112X
1100P08 05	M44KC9B	920-000015-013	RCN113.5X
1100P08 06	M44MC6B-XS	920-000015-016	RCN114X
1100P08C00	M44W6B	920-000016-007	RCN115X
1100P08C01	M46MC6B	920-000016-010	RCN116X
1100P08C04	M4801	920-000016-013	RCN117.2X
1100P08R00	M48RR	920-000016-016	RCN118X
1100P08R01	M49KC9B	920-000024-007	RCN1-219
1100P08R02	M49MC6B	920-000024-010	RCN1-220
1100P08R03	M4B01510S20NB	920-000024-016	RCN1-221.3

1100P08R04	M4B07510S20NB	920-000025-007	RCN1-222
1100P08V01	M4CU2-316	920-000025-010	RCN1-223
1100P08V02	M4CU4-316	920-000025-016	RCN1-225
1100P08V03	M4FA1/8N-316	920-000026-007	RCN1-226.9
1100P08V04	M4FSC1/8N-316	920-000027-001	RCN1-228
1100P10 00	M4MA1/8N-316	920-000027-010	RCN1-338
1100P10 00 75	M4MA1/8R-316	920-000027-016	RCN1-342
1100P10 01	M4MSC1/2N-316	920-000034-002	RCN1-438
1100P10 01 75	M4MSC1/4K-316	920-000034-009	RCN1-440
1100P10 02	M4MSC1/4N-316	920-000034-010	RCN1-442
1100P10 03	M4MSC1/4R-316	920-000034-013	RCN1-445
1100P10 04	M4MSC1/8BR-316	920-000034-015	RCN1-448
1100P10 04 75	M4MSC1/8K-316	920-000034-016	RCN1-448.3
1100P10 05	M4MSC1/8N-316	920-000035-001	RCN1-450
1100P10C00	M4MSCM5X0.8-316	920-000035-003	RCN1-451
1100P10C01	M4MSEL1/4K-316	920-000035-007	RCN1-452
1100P10C04	M4MSEL1/4N-316	920-000035-008	RCN1-455
1100P10R00	M4MSEL1/8K-316	920-000035-010	RCN1-457
1100P10R01	M4MSEL1/8N-316	920-000035-013	RCN1-460
1100P10R02	M4TURM3-316	920-000035-016	RCN1-460.3
1100P10R03	M4TURM6-316	920-000035-018	RCN1-463
1100P10R04	M510-0935	920-000036-001	RCN1-465
1100P10V01	M510-0935	920-000036-004	RCN1-470
1100P10V02	M510-1758	920-000036-010	RCN2-108
1100P10V04	M510-1758	920-000036-011	RCN2-110
1100P12 00	M510-1759	920-000036-013	RCN2-112
1100P12 00 09	M510-1759	920-000036-016	RCN219X
1100P12 01	M53004L-10A	920-000044-009	RCN220X
1100P12 01 09	M53004L-10A	920-000044-015	RCN221.3X
1100P12 04	M5FF88BL	920-000044-016	RCN222X
1100P12 04 09	M5GG88BL	920-000045-007	RCN223X
1100P12 06	M5P80NBL	920-000045-009	RCN225X
1100P12C00	M5RRD	920-000045-010	RCN226.9X
1100P12C00 09	M5RRP	920-000045-013	RCN228X
1100P12C01	M5X1/8FF84BL	920-000045-016	RCN230X
1100P12C01 09	M5X1/8GG84BL	920-000046-001	RCN330X
1100P12C04	M6 ALOK-316-SET	920-000046-004	RCN332X
1100P12C04 09	M6 ALOK-6MO-SET	920-000046-005	RCN333.7X
1100P12R00	M6 ALOK-M-SET	920-000046-006	RCN335X
1100P12R01	M601-1423	920-000046-007	RCN338X
1100P12R04	M601-1423	920-000046-010	RCN340X
1100P12V01	M601-1755	920-000047-001	RCN342X
1100P12V02	M601-1755	920-000047-010	RCN438X
1100P12V04	M601-1756	920-000047-016	RCN440X
1100P14 00	M601-1756	9201 20 10	RCN442X
1100P14 00 11	M601-1757	9201 20 19	RCN445X
1100P14 01	M601-1757	9201 21 10	RCN448.3X
1100P14 01 11	M601-1758	9201 21 13	RCN450X
1100P14 02 11	M601-1758	9201 25 13	RCN451X
1100P14 04	M601-1759	9201 25 17	RCN452X
1100P14 04 11	M601-1759	9201 25 21	RCN455X
1100P14C00	M601-1760	9201 27 17	RCN457X
1100P14C00 11	M601-1760	9201 27 21	RCN460.3X

1100P14C01	M601-1761	9201 27 27	RCN463X
1100P14C01 11	M601-1761	9201X20 10	RCN465X
1100P14C04	M603-4979	9201X20 19	RCN470X
1100P14C04 11	M603-4979	9201X21 10	RCN570X
1100P16 00 13	M603-4980	9201X21 13	RCN573X
1100P16 01 13	M603-4980	9201X25 13	RCN575X
1100P16 02 13	M603-4981	9201X25 17	RCN576.1X
1100P16 03 13	M603-4981	9201X25 21	RCN580X
1100P16 04 13	M603-4982	9201X27 17	RCN582.5X
1100T04 00 25	M603-4982	9201X27 21	RCN588.9X
1100T04A01	M603-4983	9201X27 27	RCN590X
1100T04P00	M603-4983	921-111051-000	RCN6100X
1100T04P12	M66MC6B	921-111121-000	RCN6101.6X
1100T04P13	M66W6B-XS	921-111241-000	RCN6108X
1100T04P14	M69MC6B	9211-323-00B	RCN6114.3X
1100T06 00	M6A-B2LJ2-BN-SSP	9214 20 10	RCN6127X
1100T06A01	M6A-B2LJ2-SSP	9214 20 19	RCN690X
1100T06P00	M6A-B2LJ-SSP	9214 21 10	RCN697X
1100T06P12	M6A-B2XJ2-SSP	9214 21 13	RCN7127X
1100T06P13	M6A-B2XJ-SSP	9214 25 13	RCN7133X
1100T06P14	M6A-B6LJ2-BN-SSP	9214 25 17	RCN7140X
1100T08 00	M6A-B6LJ2-BP	9214 25 21	RCN7150X
1100T08A01	M6A-B6LJ2-EPR-SSP	9214 27 17	RCN7152.4X
1100T08P00	M6A-B6LJ2-EPR-SSP-C3	9214 27 21	RCN7159X
1100T08P12	M6A-B6LJ2-SSP	9214 27 27	RCN7165.1X
1100T08P13	M6A-B6LJ2-SSP-C3	9214X20 10	RCN7168.3X
1100T08P14	M6A-B6LJ2-V-SSP	9214X20 19	RCN8168.3X
1100T10 00	M6A-B6LJ-BP	9214X21 10	RCN8177.8X
1100T10A01	M6A-B6LJ-EPR-SSP-C3	9214X21 13	RCN8193.7X
1100T10P00	M6A-B6LJ-SSP	9214X25 13	RCN8203X
1100T10P12	M6A-B6LJ-SSP-C3	9214X25 17	RCN8219.1X
1100T10P13	M6A-B6LJ-V-SSP	9214X25 21	RCN8220X
1100T10P14	M6A-B6XJ2-BN-SSP	9214X27 17	RCNE2X
1100T12 00	M6A-B6XJ2-BP	9214X27 21	RCNE320X
1100T12A01	M6A-B6XJ2-SSP	9214X27 27	RCNE321.3X
1100T12P00	M6A-B6XJ2-SSP-C3	9223 21 04	RCNE322X
1100T12P12	M6A-B6XJ2-V-SSP	9223 21 06	RCNE3X
1100T12P13	M6A-B6XJ-BP	9223 21 08	RCNE435X
1100T12P14	M6A-B6XJ-SSP	9223 25 06	RCO3408-03-200D
1100U03A01	M6A-B6XJ-SSP-C3	9223 25 08	RCO3408-03-200D
1100U04 01	M6A-B6XJ-V-BP	9223 25 10	RCP106X
1100U04 02	M6A-B6XS2-EPR-SSP-C3	9223 25 13	RCP108X
1100U04 03	M6A-B6XS2-SSP	9223 27 08	RCP1-106
1100U04 04	M6A-B6XS2-V-SSP	9223 27 10	RCP1-108
1100U04 05	M6A-C4L-1/3-B	9223 27 13	RCP110X
1100U04 06	M6A-C4L-1/3-B-C3	9223 27 19	RCP1-110
1100U04A01	M6A-C4L-1/3-BN-SS	9226 20 03	RCP1-112
1100U04K01	M6A-C4L-1/3-BN-SS-OXY	9226 20 04	RCP1-115
1100U04R01	M6A-C4L-1/3-EPR-B	9226 21 04	RCP1-116
1100U04R04	M6A-C4L-1/3-EPR-SS	9226 21 06	RCP1-118
1100U04R08	M6A-C4L-1/3-SS	9226 21 08	RCP112.7X
1100U04R12	M6A-C4L-1/3-SS-C3	924452Q	RCP112X
1100U04R13	M6A-C4L-100-B	924453Q	RCP113.5X

1100U04R14	M6A-C4L-100-EPR-SS	925-000102-001	RCP114X
1100U04R17	M6A-C4L-100-SS	925040Q	RCP115X
1100U05 01	M6A-C4L-10-B	925580Q	RCP116X
1100U05 04	M6A-C4L-10-BN-B	925582Q	RCP117.2X
1100U06 01	M6A-C4L-10-BN-SS	925600Q	RCP118X
1100U06 02	M6A-C4L-10-EPR-SS	925602Q	RCP1-219
1100U06 03	M6A-C4L-10-EPR-SS-C3	926696Q	RCP1-220
1100U06 04	M6A-C4L-10-SS	926697Q	RCP1-221.3
1100U06 05	M6A-C4L-1-B	926698Q	RCP1-222
1100U06 06	M6A-C4L-1-BN-B	926699Q	RCP1-225
1100U06A01	M6A-C4L-1-BN-SS	926716Q	RCP1-226.9
1100U06K01	M6A-C4L-1-EPR-SS	926717Q	RCP1-228
1100U06K02	M6A-C4L-1-SS	926835Q	RCP1-230
1100U06K03	M6A-C4L-1-SS-C3	926836Q	RCP1-330
1100U06K04	M6A-C4L-25-B	926837Q	RCP1-332
1100U06R01	M6A-C4L-25-EPR-SS	926838Q	RCP1-333.7
1100U06R04	M6A-C4L-25-SS	926839Q	RCP1-335
1100U06R08	M6A-C4L-50-B	926841Q	RCP1-338
1100U06R12	M6A-C4L-50-BN-SS	926843Q	RCP1-342
1100U06R13	M6A-C4L-50-EPR-SS	926845Q	RCP1-438
1100U06R14	M6A-C4L-50-SS	926888Q	RCP1-440
1100U06R17	M6A-C4L-5-B	926890Q	RCP1-442
1100U06V01	M6A-C4L-5-BN-B	926988Q	RCP1-445
1100U06V04	M6A-C4L-5-BN-SS	926990Q	RCP1-448.3
1100U08 01	M6A-C4L-5-EPR-SS	926992Q	RCP1-450
1100U08 02	M6A-C4L-5-SS	926994Q	RCP1-450.8
1100U08 03	M6A-C4L-5-SS-C3	926996Q	RCP1-451
1100U08 04	M6A-C4L-75-EPR-SS	926998Q	RCP1-452
1100U08 05	M6A-C4L-75-SS	927169Q	RCP1-455
1100U08 06	M6A-CO4L-1/3-BN-SS	927170Q	RCP1-457
1100U08A01	M6A-CO4L-1/3-EPR-SS	927175Q	RCP1-460
1100U08K01	M6A-CO4L-1/3-KZ-SS	927176Q	RCP1-460.3
1100U08K02	M6A-CO4L-1/3-V-SS	927181Q	RCP1-463
1100U08K03	M6A-CO4L-10-EPR-SS	927182Q	RCP1-470
1100U08K04	M6A-CO4L-10-KZ-SS	927661Q	RCP1-575
1100U08R01	M6A-CO4L-10-V-SS	927663Q	RCP1-576.1
1100U08R04	M6A-CO4L-1-BN-SS	927696Q	RCP1-582.5
1100U08R08	M6A-CO4L-1-EPR-SS	927723Q	RCP1-588.9
1100U08R12	M6A-CO4L-1-EPR-SS-C3	927725Q	RCP1-590
1100U08R13	M6A-CO4L-1-KZ-SS	927861Q	RCP1-6101.6
1100U08R14	M6A-CO4L-1-V-SS	928142Q	RCP1-6114.3
1100U08R17	M6A-CO4L-1-V-SS-C3	928143Q	RCP1-7140
1100U08V01	M6A-CO4L-25-EPR-SS	928150Q	RCP1-7152.4
1100U08V04	M6A-CO4L-25-KZ-SS	928152Q	RCP1-7168.3
1100U10 01	M6A-CO4L-25-V-SS	928154Q	RCP1-8168.3
1100U10 02	M6A-CO4L-50-EPR-SS	928156Q	RCP2-110
1100U10 03	M6A-CO4L-5-EPR-SS	9285 20 03	RCP2-112
1100U10 04	M6A-CO4L-5-V-SS	9285 20 04	RCP2-115
1100U10A01	M6A-CO4L-75-KZ-SS	9285 20 05	RCP2-116
1100U10K01	M6A-F4L-100-EPR-SS	9285 21 04	RCP216BX
1100U10K02	M6A-F4L-100-SS	9285 21 06	RCP219X
1100U10K03	M6A-F4L-10-BN-SS	9285 21 08	RCP220BX
1100U10K04	M6A-F4L-10-EPR-SS	9285 25 06	RCP220X

1100U10R01	M6A-F4L-10-SS	9285 25 08	RCP221.3X
1100U10R08	M6A-F4L-1-BN-SS	9285 25 10	RCP2-220
1100U10R14	M6A-F4L-1-EPR-SS	9285 25 13	RCP2-221.3
1100U10V01	M6A-F4L-1-SS	9285 27 08	RCP2-222
1100U12 01	M6A-F4L-250-SS	9285 27 10	RCP2-225
1100U12 03	M6A-F4L-450-SS	9285 27 13	RCP2-228
1100U12 04	M6A-F4L-50-BN-SS	9285 27 19	RCP222X
1100U12A01	M6A-F4L-50-EPR-SS	9286 20 10	RCP2-230
1100U12K01	M6A-F4L-50-SS	9286 20 19	RCP223X
1100U12K02	M6A-F4L-5-EPR-SS	9286 21 10	RCP225BX
1100U12K04	M6A-F4L-5-SS	9286 21 13	RCP225X
1100U12R08	M6A-FT4-100-SS	9286 25 10	RCP226.9BX
1100U12R14	M6A-FT4-10-BN-SS	9286 25 13	RCP226.9X
1100U12V01	M6A-FT4-10-EPR-SS	9286 25 17	RCP228BX
1100U14 01 95	M6A-FT4-10-SS	9286 25 21	RCP228X
1100U14 02 95	M6A-FT4-10-SS-C3	9286 27 17	RCP230BX
1100U14 04 95	M6A-FT4-1-BN-SS	9286 27 21	RCP230X
1100U14K02 95	M6A-FT4-1-EPR-SS	9286 27 27	RCP2-333.7
1100U14K03 95	M6A-FT4-1-SS	928642Q	RCP2-338
1100U14R08 95	M6A-FT4-250-EPR-SS	928643Q	RCP2-342
1100U16 04 11	M6A-FT4-250-SS	9286X20 10	RCP2-448.3
1100U16R08 11	M6A-FT4-450-KZ-SS	9286X20 19	RCP2-460.3
1100W04 01	M6A-FT4-450-SS	9286X21 10	RCP2-588.9
1100W06 01	M6A-FT4-50-EPR-SS	9286X21 13	RCP3-106
1100W08 01	M6A-FT4-50-SS	9286X25 13	RCP3-108
1100Y04 00	M6A-FT4-5-BN-SS	9286X25 17	RCP3-110
1100Y06 00	M6A-FT4-5-SS	9286X25 21	RCP3-112
1100Y08 00	M6A-H0L-EPR-SS-TC	9286X27 17	RCP3-115
1100Y10 00	M6A-H0L-V-SS-K	9286X27 21	RCP3-116
1100Y12 00	M6A-H0L-V-SS-K-C3	9286X27 27	RCP3-220
1100Y14 00	M6A-H0L-V-SS-TC	9287 20 10	RCP3-222
11012-00165	M6A-H0L-V-SS-TC-C3	9287 20 19	RCP3-225
11012-00165	M6A-H1L-EPR-SS-K	9287 21 10	RCP3-226.9
11012-00360	M6A-H1L-EPR-SS-TC	9287 21 13	RCP3-228
11012-00360	M6A-H1L-V-SS-K	9287 25 10	RCP3-230
11012-00600	M6A-H1L-V-SS-K-C3	9287 25 13	RCP325BX
11012-00600	M6A-H1L-V-SS-TC	9287 25 17	RCP330X
11013-01031	M6A-H1L-V-SS-TC-C3	9287 25 21	RCP332X
11013-01031	M6A-H2L-V-SS-K	9287 27 17	RCP333.7X
11015-02605	M6A-H2L-V-SS-TC	9287 27 21	RCP3-335
11015-02605	M6A-H3L-BN-SS-K	9287 27 27	RCP3-338
11015-02805	M6A-H3L-V-SS-K	9287X20 10	RCP3-342
11015-02805	M6A-H3L-V-SS-TC	9287X20 19	RCP335X
11015-03205	M6A-H4L-V-SS-K	9287X21 10	RCP338X
11015-03205	M6A-H4L-V-SS-TC	9287X21 13	RCP340X
11016-00500	M6A-H5L-V-SS-K	9287X25 13	RCP342X
11016-00500	M6A-H5L-V-SS-TC	9287X25 17	RCP3-460.3
11016-01300	M6A-H6L-BN-SS-TC	9287X25 21	RCP3-465
11016-01300	M6A-H6L-EPR-SS-TC-C3	9287X27 17	RCP400SF
11019-01275	M6A-H6L-KZ-SS-TC	9287X27 21	RCP400SH
11019-01275	M6A-H6L-V-SS-K	9287X27 27	RCP4-108
110-1N-NC-WD0S-8	M6A-H6L-V-SS-TC	928934Q	RCP4-112
11020-01140	M6A-HB4XK-EPR-SSP	928935Q	RCP4-116

11020-01140	M6A-HB4XK-SSP	928952Q	RCP4-118
1102FIL	M6A-HB4XPKR-SSP	928953Q	RCP4-220
1102FIL	M6A-LC6L-SS	929099Q	RCP4-222
11052FIL	M6A-MB4LPFA-BP	9293 23 13	RCP4-225
11052FIL	M6A-MB4LPFA-BP-C3	9293 25 17	RCP4-228
11053FIL	M6A-MB4LPFA-SSP	9293 27 21	RCP4-340
11053FIL	M6A-MB4LPFA-SSP-C3	929-4	RCP438X
11053FIL	M6A-MB4XPFA-BP	929-6	RCP440BX
11053FIL	M6A-MB4XPFA-BP-C3	929-8	RCP440X
11054FIL	M6A-MB4XPFA-SSP	929891Q	RCP442BX
11054FIL	M6A-MB4XPFA-SSP-C3	929899Q	RCP442X
11054FIL	M6A-MB6APFA-SSP	929903Q	RCP444.5BX
11054FIL	M6A-MB6LPFA-BP	929923Q	RCP445X
11055FIL	M6A-MB6LPFA-SSP	929927Q	RCP4-460
11055FIL	M6A-MB6LPFA-SSP-C3	929B-12	RCP448.3X
11056FIL	M6A-MB6XPFA-BP	929B-4	RCP450X
11056FIL	M6A-MB6XPFA-SSP	929B-6	RCP451X
11056FIL	M6A-MB6XPFA-SSP-C3	929B-8	RCP452X
11056FIL	M6A-NLA-EPR-SS-V	930099Q	RCP454BX
11057FIL	M6A-NLA-V-SS-K	930100Q	RCP455X
11057FIL	M6A-NLL-BN-SS-K	930118Q	RCP457X
11058FIL	M6A-NLL-EPR-SS-K	930119Q	RCP458BX
11058FIL	M6A-NLL-KZ-SS-V-C3	930162Q	RCP460.3BX
11059FIL	M6A-NLL-V-SS-K	930164Q	RCP460.3X
11059FIL	M6A-NLL-V-SS-K-C3	930189Q	RCP463X
11060FIL	M6A-NLL-V-SS-V	930190Q	RCP465X
11060FIL	M6A-NMA-V-SS-K	930191Q	RCP466X
11061FIL	M6A-NMA-V-SS-K-C3	930192Q	RCP470X
11061FIL	M6A-NMA-V-SS-V	930193Q	RCP5-220
11062FIL	M6A-NML-BN-B-K	930194Q	RCP5-228
11062FIL	M6A-NML-BN-B-V	930197Q	RCP5-230
11063FIL	M6A-NML-BN-SS-K	930198Q	RCP5-335
11063FIL	M6A-NML-BN-SS-V	930219Q	RCP5-338
11064FIL	M6A-NML-EPR-SS-V	930220Q	RCP5-342
11064FIL	M6A-NML-KZ-SS-K	930223Q	RCP5-448.3
11065FIL	M6A-NML-KZ-SS-V	930224Q	RCP570X
11065FIL	M6A-NML-KZ-SS-V-C3	930227Q	RCP573X
11066FIL	M6A-NML-V-B-K	930228Q	RCP575X
11066FIL	M6A-NML-V-SS-K	9303161911/S	RCP576.1X
11067FIL	M6A-NML-V-SS-V	9303161911/S	RCP580X
11067FIL	M6A-NP6AR-SSP	930367Q	RCP582.5X
11067FIL	M6A-NP6AR-SSP-C3	930368Q	RCP588.9X
11067FIL	M6A-NP6LK-SSP	930369Q	RCP590X
11068FIL	M6A-NP6LR-EPR-SSP-C3	930544Q	RCP6100X
11068FIL	M6A-NP6LR-G-SSP	9306J	RCP6101.6X
11069FIL	M6A-NP6LR-SSP	931018Q	RCP6108X
11069FIL	M6A-NP6LR-SSP-C3	931020Q	RCP6114.3X
1106-QC	M6A-NSA-BN-B-K	9313-022-00A	RCP6127X
1106-QC	M6A-NSA-V-SS-K	931-311051-500	RCP690X
11070FIL	M6A-NSA-V-SS-V	931-511131-000	RCP697X
11070FIL	M6A-NSL-BN-B-K	932610Q	RCP7127X
11071FIL	M6A-NSL-BN-B-K-C3	932612Q	RCP7133X
11071FIL	M6A-NSL-BN-B-V	932613Q	RCP7139.7X

11072FIL	M6A-NSL-BN-SS-K	932615Q	RCP7140X
11072FIL	M6A-NSL-BN-SS-V	932616Q	RCP7150X
11073FIL	M6A-NSL-EPR-SS-K	932618Q	RCP7152.4X
11073FIL	M6A-NSL-EPR-SS-V	932656Q	RCP7159X
11074FIL	M6A-NSL-KZ-SS-K	932657Q	RCP7165.1X
11074FIL	M6A-NSL-KZ-SS-V-C3	932658Q	RCP7168.3X
11075FIL	M6A-NSL-V-B-K	932660Q	RCP8168.3X
11075FIL	M6A-NSL-V-SS-K	932661Q	RCP8177.8X
11076FIL	M6A-NSL-V-SS-K-C3	932662Q	RCP8193.7X
11076FIL	M6A-NSL-V-SS-V	932663Q	RCP8203X
11079FIL	M6A-PR4-BNT-SS	932664Q	RCP8219.1X
11079FIL	M6A-PR4-EPRT-SS	932665Q	RCP8220X
11080FIL	M6A-PR4-EPRT-SS-C3	932666Q	RCP9267X
11080FIL	M6A-PR4-VT-B	932667Q	RCP9273X
11082FIL	M6A-PR4-VT-SS	932670Q	RCP9323.9X
11082FIL	M6A-PR4-VT-SS-C3	932679Q	RCPE206X
11083FIL	M6A-RH4A-BNT-SS-K1	932872Q	RCPE208X
11083FIL	M6A-RH4A-BNT-SS-K2	932873Q	RCPE210X
11090FIL	M6A-RH4A-BNT-SS-K3	932874Q	RCPE212.7X
11090FIL	M6A-RH4A-BNT-SS-K5	932875Q	RCPE212X
11091FIL	M6A-RH4A-EPRT-SS	933047Q	RCPE214X
11091FIL	M6A-RH4A-EPRT-SS-K1	933091Q	RCPE215X
11092FIL	M6A-RH4A-EPR-T-SS-K2	933092Q	RCPE216X
11092FIL	M6A-RH4A-KZT-SS	933193Q	RCPE217.2X
11093FIL	M6A-RH4A-KZT-SS-K2	933194Q	RCPE218X
11093FIL	M6A-RH4A-KZT-SS-MN	933195Q	RCPE219X
11095FIL	M6A-RH4A-VT-SS	933196Q	RCPE320X
11095FIL	M6A-RH4A-VT-SS-K1	933202Q	RCPE321.3X
11096FIL	M6A-RH4A-VT-SS-K2	933203Q	RCPE322X
11096FIL	M6A-RH4A-VT-SS-K3	933204Q	RCPE323X
110A	M6A-RH4A-VT-SS-K4	933205Q	RCPE325X
110A-036-AM-E	M6A-RH4A-VT-SS-K5	933210Q	RCPE326.9X
110A-036-AM-E-R1	M6A-RH4A-VT-SS-K6	933211Q	RCPE328X
110A-036-AS-0	M6A-RH4A-VT-SS-K7	933212Q	RCPE330X
110A-036-AT-0	M6A-RL4A-BNT-SS	933213Q	RCPE332X
110A-071-AS-0	M6A-RL4A-BNT-SS-KA	933218Q	RCPE3X
110A-071-AS-E	M6A-RL4A-BNT-SS-KA-C3	933219Q	RCPE432X
110A-071-BS-E	M6A-RL4A-BNT-SS-KB	933220Q	RCPE433.7X
110A-088-AT-1	M6A-RL4A-BNT-SS-KC	933221Q	RCPE435X
110A-164-FS-0	M6A-RL4A-BNT-SS-KD	933228Q	RCPE438X
1-1-1 JBZ-B	M6A-RL4A-EPRT-SS	933229Q	RCPE440X
1-1-1 JBZ-SS	M6A-RL4A-EPRT-SS-KB	933239Q	RCPE442X
1110-7638	M6A-RL4A-EPRT-SS-MN	933246Q	RCPE445.5X
11110-QC	M6A-RL4A-KZT-SS-KA	933253Q	RCPE448X
11110-QC	M6A-RL4A-KZT-SS-KB	933258Q	RCPE451X
11111-00080	M6A-RL4A-KZT-SS-KC	933265Q	RCPE453.4X
11111-00080	M6A-RL4A-VT-SS	933266Q	RCPE4X
11111-00100	M6A-RL4A-VT-SS-KA	933295Q	RCPE570X
11111-00100	M6A-RL4A-VT-SS-KA-C3	933302Q	RCPEA542X
11111-00125	M6A-RL4A-VT-SS-KB	933333Q	RCPEA676.1X
11111-00125	M6A-RL4A-VT-SS-KC	933364Q	RCPEA7-425
11111-00140	M6A-RL4A-VT-SS-KD	933365Q	RCPG106X
11111-00140	M6A-RL4A-VT-SS-KD-C3	933488Q	RCPG108X

11111-00200	M6A-RL4A-VT-SS-KE	933489Q	RCPG110X
11111-00200	M6A-RL4A-VT-SS-KF	933734Q	RCPG112.7X
11111-00210	M6A-RL4A-VT-SS-KG	933735Q	RCPG112X
11111-00210	M6A-RL4A-VT-SS-MN-KA	933742Q	RCPG113.5X
11111-00212	M6A-RL4A-VT-SS-MN-KB	933763Q	RCPG114X
11111-00212	M6A-RL4A-VT-SS-MN-KC	933774Q	RCPG115X
11111-00240	M6A-RL4A-VT-SS-MN-KD	933775Q	RCPG116X
11111-00240	M6A-SWB4L-RT-V-SS	933777Q	RCPG117.2X
11111-00250	M6A-U6LB-G-SS	933782Q	RCPG118X
11111-00250	M6A-U6LB-G-SS-HT	933784Q	RCPG219X
11111-00260	M6A-U6LB-G-SS-HT-C3	933786Q	RCPG220X
11111-00260	M6A-U6LB-T-SS	933788Q	RCPG221.3X
11111-00300	M6A-U6LR-G-SS	934123Q	RCPG222X
11111-00300	M6A-U6LR-G-SS-HT	934124Q	RCPG223X
11111-00325	M6A-U6LR-T-SS	934194Q	RCPG225X
11111-00325	M6A-U6LR-T-SS-C3	934310Q	RCPG226.9X
11111-00350	M6A-V4AK-SS	934311Q	RCPG228X
11111-00350	M6A-V4AN-BN-SS	934332T	RCPG230X
11111-00380	M6A-V4AN-SS	934474Q	RCPG330X
11111-00380	M6A-V4AQ-BN-SSP	934475Q	RCPG332X
11111-00400	M6A-V4AQ-SSP	934-M30-8	RCPG333.7X
11111-00400	M6A-V4AR-SS	935550Q	RCPG335BX
11111-00420	M6A-V4LK-B	935551Q	RCPG335X
11111-00420	M6A-V4LK-SS	935V-00600	RCPG338X
11111-00450	M6A-V4LK-V-SS	935V-00600	RCPG340X
11111-00450	M6A-V4LN-B	936004EPDM	RCPG342X
11111-00460	M6A-V4LN-BN-SS	936601Q	RCPG438X
11111-00460	M6A-V4LN-SS	936602Q	RCPG440X
11111-00470	M6A-V4LN-SSBASF	936698Q	RCPG442X
11111-00470	M6A-V4LN-SS-C3	936699Q	RCPG444.5BX
11111-00480	M6A-V4LN-V-SS	936700Q	RCPG445X
11111-00480	M6A-V4LQ-11AC-SS	936701Q	RCPG448.3X
11111-00500	M6A-V4LQ-11AC-SS-C3	936702Q	RCPG450BX
11111-00500	M6A-V4LQ-KZ-11AC-SS	936703Q	RCPG450X
11111-00515	M6A-V4LQ-SSP	936704Q	RCPG451X
11111-00515	M6A-V4LQ-SSP-C3	936705Q	RCPG452X
11111-00525	M6A-V4LR-B	936706Q	RCPG455X
11111-00525	M6A-V4LR-B-C3	936707Q	RCPG457X
11111-00600	M6A-V4LR-SS	936708Q	RCPG460.3X
11111-00600	M6A-V4LR-SS-C3	936709Q	RCPG463X
11111-00650	M6CU1-316	936710Q	RCPG465X
11111-00650	M6CU2-316	936711Q	RCPG470X
11111-00655	M6CU2-B	936712Q	RCVR106X
11111-00655	M6CU2-M	936714Q	RCVR108X
11111-00660	M6CU2-NNR	936715Q	RCVR110X
11111-00660	M6CU4-316	936716Q	RCVR112.7X
11111-00700	M6CU4-825	936717Q	RCVR112X
11111-00700	M6CU4-B	936718Q	RCVR113.5X
11111-00750	M6CU4-M	936719Q	RCVR114X
11111-00750	M6CU4-NNR	936747Q	RCVR115X
11111-00800	M6CU5-316	936748Q	RCVR116X
11111-00800	M6CU6-316	936749Q	RCVR117.2X
11111-00900	M6CU8-316	936755Q	RCVR118X

11111-00900	M6FA1/2N-316	937058Q	RCVR219X
11111-01000	M6FA1/2R-316	937059Q	RCVR220X
11111-01000	M6FA1/4N-316	937060Q	RCVR221.3X
11111-01100	M6FA1/4N-6MO	937061Q	RCVR222X
11111-01100	M6FA1/4N-HC	937062Q	RCVR223X
11111-01125	M6FA1/4N-M	937063Q	RCVR225X
11111-01125	M6FA1/4N-TI	937064Q	RCVR226.9X
11111-01150	M6FA1/4R-316	937065Q	RCVR228X
11111-01150	M6FA1/8K-316	937066Q	RCVR230X
11111-01200	M6FA1/8N-316	937067Q	RCVR330X
11111-01200	M6FA1/8R-316	937068Q	RCVR332X
11111-01270	M6FA1/8R-6MO	937069Q	RCVR333.7X
11111-01270	M6FA3/8N-316	937070Q	RCVR335X
11111-01300	M6FAGC1/2R-316	937071Q	RCVR338X
11111-01300	M6FAGC1/4R-316	937072Q	RCVR340X
11111-01400	M6FAGC3/8R-316	937073Q	RCVR342X
11111-01400	M6FBC1/2N-316	937074Q	RCVR438X
11111-01470	M6FBC1/4N-316	937075Q	RCVR440X
11111-01470	M6FBC1/4N-6MO	937076Q	RCVR442X
11111-01675	M6FBC1/4N-IIY	937077Q	RCVR445X
11111-01675	M6FBC1/4N-M	937078Q	RCVR448.3X
11111-01800	M6FBC1/8N-316	937079Q	RCVR450X
11111-01800	M6FBC1/8N-B	937080Q	RCVR451X
11111-01850	M6FBT1/4N-316	937081Q	RCVR452X
11111-01850	M6FBT1/4N-M	937082Q	RCVR455X
11111-01860	M6FBT1/8N-316	937100Q	RCVR457X
11111-01860	M6FEL1/2N-316	937101Q	RCVR460.3X
11111-02000	M6FEL1/4K-316	937103Q	RCVR463X
11111-02000	M6FEL1/4N-316	937105Q	RCVR465X
1111200043-01	M6FEL1/4N-6MO	937106Q	RCVR470X
11112-00080	M6FEL1/8K-316	937107Q	RCVR573X
11112-00080	M6FEL1/8N-316	937108Q	RCVR575X
11112-00090	M6FLNUT-316	937109Q	RCVR576.1X
11112-00090	M6FLWASHER-316	937110Q	RCVR588.9X
1111200102-01	M6FRT1/4N-316	937112Q	RCVR6114.3X
11112-00120	M6FRT1/4N-6MO	937113Q	RCVR690X
11112-00120	M6FRT1/8N-316	937114Q	RCVR697X
11112-00125	M6FSC1/2K-316	937115Q	RCVR7133X
11112-00125	M6FSC1/2N-316	937116Q	RCVR7140X
11112-00150	M6FSC1/2N-6MO	937123Q	RCXB12
11112-00150	M6FSC1/2N-B	937124Q	RCXB16
11112-00160	M6FSC1/2N-IIY	937125Q	RCXB24
11112-00160	M6FSC1/2N-M	937126Q	RCXB24-CP
11112-00185	M6FSC1/2N-NNR	937127Q	RCXB4400
11112-00185	M6FSC1/2N-TTZ	937128Q	RCXB6600
11112-00200	M6FSC1/4K-316	937129Q	RCXB9900
11112-00200	M6FSC1/4K-NNR	937130Q	RCXO12
11112-00210	M6FSC1/4N-316	937134Q	RCXO16
11112-00210	M6FSC1/4N-6MO	937142Q	RCXO4400
11112-00220	M6FSC1/4N-B	937146Q	RCXO6600
11112-00220	M6FSC1/4N-IIY	937155Q	RCXO9900
11112-00225	M6FSC1/4N-M	937156Q	RCXO9900-TO
11112-00225	M6FSC1/4N-NNR	937157Q	RD102S03

11112-00240	M6FSC1/4N-NNR-NC	937158Q	RD102S18
11112-00240	M6FSC1/4N-TTZ	937163Q	RD102S30
11112-00250	M6FSC1/4R-316	937165Q	RD13/02
11112-00250	M6FSC1/8K-316	937166Q	RD13/04
11112-00260	M6FSC1/8N-316	937167Q	RD21
11112-00260	M6FSC1/8N-6MO	937168Q	RD33
11112-00264	M6FSC1/8N-B	937169Q	RD466653U001
11112-00264	M6FSC1/8N-IIY	937170Q	RD60
11112-00270	M6FSC1/8N-M	937171Q	RD80/60
11112-00270	M6FSC1/8N-NNR	937172Q	RDFALAN
11112-00275	M6FSC1/8R-316	937180Q	RDFALBN
11112-00275	M6FSC3/8K-316	937181Q	RDFALDN
11112-00280	M6FSC3/8N-316	937182Q	RDFALWN
11112-00280	M6FSC3/8N-6MO	937183Q	RDH042S30
11112-00290	M6FSC3/8N-825	937185Q	RDH042S50
11112-00290	M6FSC3/8N-NNR	937187Q	RDH081S30
11112-00300	M6GC1/2R-316	937188Q	RDH082S50
11112-00300	M6GC1/2R-316-OXY	937189Q	RDH101S10
11112-00315	M6GC1/2R-B	937190Q	RDH101S30
11112-00315	M6GC1/2R-NNR	937191Q	RDH101S50
11112-00320	M6GC1/4R-316	937200Q	RDH103F50V
11112-00320	M6GC1/4R-316-OXY	937201Q	RDHA-LWN
11112-00330	M6GC1/4R-B	937202Q	RDM2AT25S10
11112-00330	M6GC1/8R-316	937203Q	RDM2AT25S10X957
11112-00340	M6GC3/8R-316	937204Q	RDM2AT25SV10
11112-00340	M6HHSSX16-316	937205Q	RDM2AT35L10
11112-00345	M6HHSSX20-316	937206Q	RDM2AT35S10
11112-00345	M6HHSSX25-316	937207Q	RDM2AT35SV10
11112-00350	M6LBX16-316	937208Q	RDM2ATBT17SV10
11112-00350	M6LBX20-316	937209Q	RDM2ATBT25KV10
11112-00367	M6LKWASHER-316	937213Q	RDM2ATBT25SV10
11112-00367	M6M1SC3-316	937214Q	RDM2ATBT35SV10
11112-00380	M6M1SC8-316	937215Q	RDM2BT17S10
11112-00380	M6M1SC8-316-VO	937216Q	RDM2BT35S10
11112-00400	M6MA1/2N-316	937219Q	RDM2PT02KVG
11112-00400	M6MA1/2N-625	937220Q	RDM2PT02SVG
11112-00410	M6MA1/2N-6MO	937221Q	RDM2PT06KVG
11112-00410	M6MA1/2N-HC	937222Q	RDM2PT06LVG
11112-00420	M6MA1/2N-M	937223Q	RDM2PT06SVC
11112-00420	M6MA1/2R-ED-316	9376S	RDM2PT06SVG
11112-00425	M6MA1/4K-316	937736Q	RDM2PT16KVG
11112-00425	M6MA1/4K-B	937737Q	RDM2PT16LVG
11112-00430	M6MA1/4N-316	937738Q	RDM2PT16SVG
11112-00430	M6MA1/4N-625	937741Q	RDM2PT16SVM
11112-00444	M6MA1/4N-6MO	937742Q	RDM2PT21KVG
11112-00444	M6MA1/4N-B	937745Q	RDM2PT21LVG
11112-00450	M6MA1/4N-HC	937746Q	RDM2PT21SNG
11112-00450	M6MA1/4N-M	937748Q	RDM2PT21SVC
11112-00460	M6MA1/4N-TI	937749Q	RDM2PT21SVG
11112-00460	M6MA1/4R-316	937750Q	RDM2PT35KVG
11112-00485	M6MA1/4R-316-OXY	937753Q	RDM2PT35LVG
11112-00485	M6MA1/4R-ED-316	937754Q	RDM2PT35SNG
11112-00500	M6MA1/8K-316	937755Q	RDM2PT35SVG

11112-00500	M6MA1/8K-6MO
11112-00515	M6MA1/8N-316
11112-00515	M6MA1/8N-625
11112-00520	M6MA1/8N-6MO
11112-00520	M6MA1/8N-M
11112-00521	M6MA1/8R-316
11112-00521	M6MA1/8R-ED-316
11112-00530	M6MA3/8N-316
11112-00530	M6MA3/8R-316
11112-00549	M6MBC1/4N-316
11112-00549	M6MBC1/4N-B
11112-00550	M6MBC1/8N-316
11112-00550	M6MBT1/4K-316
11112-00560	M6MBT1/4N-316
11112-00560	M6MBT1/4N-6MO
11112-00600	M6MBT1/4N-B
11112-00600	M6MBT1/4N-IIY
11112-00620	M6MBT1/4N-M
11112-00620	M6MBT1/8N-316
11112-00625	M6MBT1/8N-B
11112-00625	M6MBT3/8N-316
11112-00640	M6MRT1/4N-316
11112-00640	M6MRT1/4N-6MO
11112-00642	M6MRT1/4N-IIY
11112-00642	M6MRT1/4R-316
11112-00650	M6MRT1/8N-316
11112-00650	M6MRT1/8N-NNR
11112-00660	M6MSC1/2BR-316
11112-00660	M6MSC1/2K-316
11112-00700	M6MSC1/2K-M
11112-00700	M6MSC1/2N-316
11112-00725	M6MSC1/2N-6MO
11112-00725	M6MSC1/2N-6MO-NC
11112-00750	M6MSC1/2N-825
11112-00750	M6MSC1/2N-B
11112-00765	M6MSC1/2N-IIY
11112-00765	M6MSC1/2N-M
11112-00790	M6MSC1/2N-NNR
11112-00790	M6MSC1/2N-TTZ
11112-00800	M6MSC1/2R-316
11112-00800	M6MSC1/2R-316-OXY
11112-00810	M6MSC1/2R-6MO
11112-00810	M6MSC1/2R-ED-316
11112-00850	M6MSC1/2R-M
11112-00850	M6MSC1/2R-NNR
11112-00900	M6MSC1/4BR-316
11112-00900	M6MSC1/4K-316
11112-00930	M6MSC1/4K-B
11112-00930	M6MSC1/4N-316
11112-00950	M6MSC1/4N-316-OXY
11112-00950	M6MSC1/4N-6MO
11112-00960	M6MSC1/4N-6MO-NC
11112-00960	M6MSC1/4N-825

937756Q	RDM2PT35SVGX862
937757Q	RDM2TT02KVG
937758Q	RDM2TT02LVG
937759Q	RDM2TT02SVC
937760Q	RDM2TT02SVG
937763Q	RDM2TT06LVG
937764Q	RDM2TT06SNG
937765Q	RDM2TT06SVG
937766Q	RDM2TT16LVG
937767Q	RDM2TT16SVG
937768Q	RDM2TT21SVG
937769Q	RDM3PT01SVG
937771Q	RDM3PT05LVG
937772Q	RDM3PT05SVG
937773Q	RDM3PT10SVG
937774Q	RDM3PT15SVG
937775Q	RDM3PT21LVG
937776Q	RDM3PT21SVG
937777Q	RE06M05T2N1F0
937778Q	RE06M05W2V1JW
937781Q	RE06M05W2V1KW
937782Q	RE06M05W2V1XW
937783Q	RE06M10T2N1F0
937784Q	RE06M10T2N1G0
937785Q	RE06M10T2V1F0
937786Q	RE06M10T2V1G0
937787Q	RE06M10W2V1JW
937788Q	RE06M10W2V1KW
937789Q	RE06M10W2V1XW
937790Q	RE06M17T2N1F0
937791Q	RE06M17T2N1G0
937792Q	RE06M17T2V1F0
937793Q	RE06M17T2V1G0
937794Q	RE06M17W2N1XW-PILOT
937795Q	RE06M17W2V1JW
937796Q	RE06M17W2V1KW
937799Q	RE06M17W2V1XW
9377Q	RE06M21T2N1F0
937800Q	RE06M21T2N1F0XG087
937801Q	RE06M21T2V1F0
937802Q	RE06M21T2V1R0
937803Q	RE06M25T2N1F0
937804Q	RE06M25T2N1G0
937805Q	RE06M25T2V1F0
937822Q	RE06M25T2V1F0X580
937824Q	RE06M25T2V1G0
937825Q	RE06M25W2N1KW
937826Q	RE06M25W2N1XW
937828Q	RE06M25W2V1JW
937829Q	RE06M25W2V1KW
937832Q	RE06M25W2V1XW
937833Q	RE06M35T2N1F0
937834Q	RE06M35T2N1F0-PILOT

11112-01000	M6MSC1/4N-B
11112-01000	M6MSC1/4N-IIY
11112-01025	M6MSC1/4N-IIY-NC
11112-01025	M6MSC1/4N-M
11112-01050	M6MSC1/4N-NNR
11112-01050	M6MSC1/4N-TTZ
11112-01100	M6MSC1/4R-316
11112-01100	M6MSC1/4R-6MO
11112-01110	M6MSC1/4R-B
11112-01110	M6MSC1/4R-ED-316
11112-01118	M6MSC1/4R-ED-V-316
11112-01118	M6MSC1/4R-M
11112-01120	M6MSC1/8BR-316
11112-01120	M6MSC1/8BR-NNR
11112-01150	M6MSC1/8K-316
11112-01150	M6MSC1/8K-B
11112-01200	M6MSC1/8K-NNR
11112-01200	M6MSC1/8N-316
11112-01220	M6MSC1/8N-6MO
11112-01220	M6MSC1/8N-6MO-NC
11112-01285	M6MSC1/8N-B
11112-01285	M6MSC1/8N-IIY
11112-01300	M6MSC1/8N-M
11112-01300	M6MSC1/8N-NNR
11112-01320	M6MSC1/8N-TTZ
11112-01320	M6MSC1/8R-316
11112-01350	M6MSC1/8R-316-OXY
11112-01350	M6MSC1/8R-B
11112-01370	M6MSC1/8R-ED-316
11112-01370	M6MSC1/8R-M
11112-01390	M6MSC1/8R-NNR
11112-01390	M6MSC1/8R-TTZ
11112-01400	M6MSC3/4N-316
11112-01400	M6MSC3/8BR-316
11112-01500	M6MSC3/8K-316
11112-01500	M6MSC3/8K-B
11112-01600	M6MSC3/8N-316
11112-01600	M6MSC3/8N-6MO
11112-01650	M6MSC3/8N-825
11112-01650	M6MSC3/8N-B
11112-01660	M6MSC3/8N-IIY
11112-01660	M6MSC3/8N-M
11112-01680	M6MSC3/8N-NNR
11112-01680	M6MSC3/8R-316
11112-01700	M6MSC3/8R-B
11112-01700	M6MSC3/8R-B-OXY
11112-01750	M6MSC3/8R-ED-316
11112-01750	M6MSC3/8R-M
11112-01800	M6MSCM10X1.0-316
11112-01800	M6MSCM12X1.5-316
11112-01820	M6MSCM12X1-316
11112-01820	M6MSCM5X0.8-316
11112-01860	M6MSEL1/2K-316

937835Q	RE06M35T2N1F0XG087
937836Q	RE06M35T2N1F0XG189
937837Q	RE06M35T2N1G0
937838Q	RE06M35T2N1R0
937839Q	RE06M35T2V1F0
937840Q	RE06M35T2V1G0
937841Q	RE06M35T2V1R0
937842Q	RE06M35W2N1KW
937843Q	RE06M35W2N1KWXG087
937844Q	RE06M35W2N1XW
937846Q	RE06M35W2V1JW
937847Q	RE06M35W2V1KW
937849Q	RE06M35W2V1XW
937850Q	RE10R10W4SN1KW
937851Q	RE10R35T1SN1F0
937852Q	RE10R35T1SN1F0M
937853Q	RE10R35T4SN1F0
937854Q	RE10R35T4SN1F0M
937855Q	RE10R35W1SN1KWM
937856Q	RE10R35W1SN1XWM
937857Q	RE10R35W4SN1XWM
937858Q	RE16E17W1SN1KW
937859Q	RE16E17W1SN1XW
937860Q	RE16E25T1SN1F0
937861Q	RE16E25W1SN1XW
937862Q	RE16E25W1SN1XWM
937863Q	RE16E35T1SN1F0
937865Q	RE25E10T1SN1F0
937866Q	RE25E10W1SN1KW
937867Q	RE25E10W1SN1KWM
937868Q	RE25E17W1SN1KW
937869Q	RE25E17W1SN1KWM
937870Q	RE25E17W1SN1XW
937872Q	RE25E17W1SN1XWM
937873Q	RE25E25T1SN1F0
937874Q	RE25E25T1SN1F0M
937875Q	RE25E25W1SN1KW
937876Q	RE25E25W1SN1KWM
937877Q	RE25E25W1SN1XWM
937878Q	RE25E35T1SN1F0
937879Q	RE25E35T1SN1F0M
937880Q	RE25E35W1SN1KW
937881Q	RE25E35W1SN1KWM
937883Q	RE25R35T1SN1R0M
937884Q	RE25R35T4SN1F0
937885Q	RE25R35T4SN1F0M
937886Q	RE25R35W1SN1KW
937887Q	RE25R35W1SN1XWM
937888Q	RE25R35W4SN1KW
937889Q	RE25R35W4SN1KWM
937890Q	RE25R35W4SN1XWM
937891Q	RE32E10T1SN1F0
937892Q	RE32E10W1SN1KW

11112-01860	M6MSEL1/2N-316
11112-01865	M6MSEL1/2N-6MO
11112-01865	M6MSEL1/2N-B
11112-01900	M6MSEL1/2N-IIY
11112-01900	M6MSEL1/2N-M
11112-01930	M6MSEL1/2N-NNR
11112-01930	M6MSEL1/2N-TTZ
11112-01933	M6MSEL1/4K-316
11112-01933	M6MSEL1/4K-6MO
11112-02000	M6MSEL1/4K-B
11112-02000	M6MSEL1/4N-316
1111202102-01	M6MSEL1/4N-6MO
11112-02520	M6MSEL1/4N-B
11112-02520	M6MSEL1/4N-IIY
11112-02600	M6MSEL1/4N-M
11112-02600	M6MSEL1/4N-NNR
11112-02650	M6MSEL1/4N-TTZ
11112-02650	M6MSEL1/4R-316
11112-02715	M6MSEL1/8K-316
11112-02715	M6MSEL1/8K-6MO
11112-02900	M6MSEL1/8K-B
11112-02900	M6MSEL1/8N-316
11112-02915	M6MSEL1/8N-6MO
11112-02915	M6MSEL1/8N-B
11112-03000	M6MSEL1/8N-IIY
11112-03000	M6MSEL1/8N-M
1111203054-01	M6MSEL1/8N-NNR
11112-03200	M6MSEL1/8R-316
11112-03200	M6MSEL3/8K-316
11112-03500	M6MSEL3/8N-316
11112-03500	M6MSEL3/8N-6MO
11112-03595	M6MSEL3/8N-B
11112-03595	M6MSEL3/8N-IIY
11112-04050	M6MSEL3/8N-M
11112-04050	M6MTC1/2N-316
1111204053-01	M6MTC1/8N-316
11112-05000	M6MTC1/8N-IIY
11112-05000	M6MTC1/8N-M
11112-05150	M6MVEL1/4N-316
11112-05150	M6MVEL1/8N-316
1111207051-01	M6P2TU1/4-316
1111207052-01	M6PCM10-316
1111207054-01	M6PCM12-316
1111208053-01	M6PCM12-M
1111209002-01	M6PCM14-316
1111210103-01	M6PCM8-316
1111210201-01	M6PHSX16-316
1111211203-01	M6PHSX20-316
1111213052-01	M6PHSX25-316
1111213053-01	M6PHSX30-316
1111213121-01	M6PLNUT-316
1111214121-01	M6RUM2-316
1111218054-01	M6RUM3-316

937893Q	RE32E17T1SN1F0
937894Q	RE32E17T1SN1F0M
937895Q	RE32E17T1SN1G0
937896Q	RE32E17T1SN1R0
937897Q	RE32E17W1SN1XW
937898Q	RE32E17W1SN1XWM
937899Q	RE32E25W1SN1KW
937900Q	RE32E35T1SN1F0
937901Q	RE32E35W1SN1KW
937902Q	RE32E35W1SV1KW
937903Q	RE32R35T4SN1R0M
937904Q	RE32R35W1SN1KWM
937905Q	RE32R35W4SN1KWM
937906Q	RE40E10T1SN1F0
937907Q	RE40E17W1SN1XW
937908Q	RE40E35T1SN1F0
937909Q	RE40E35T1SN1F0M
937910Q	RE40E35W1SN1KW
937911Q	RE40E35W1SN1XW
937912Q	RE50E17W1SN1XW
937913Q	RE50E35T1SN1F0
937914Q	RE50E35W1SN1KW
937915Q	RE50E35W1SN1KWM
937916Q	RE63E35T1SN1F0
937917Q	RE63E35T1SN1F0M
937921Q	RE63E35W1SN1KW
937923Q	RE63E35W1SN1KWM
937925Q	RE63E35W1SN1XWM
937926Q	REC.CHG.CM
937928Q	REC.CHG.EM
937930Q	REC.CHG.FM
937931Q	REC.CHG.FP
937932Q	REC.CHG.IBS
937933Q	REC.CHG.IPD
937934Q	REC.CHG.IS
937935Q	REC.CHG.LCM
937936Q	REC.CHG.MASTER
937939Q	REC.CHG.SY
937943Q	REC.CHG.TU
937944Q	RED06L/04LLCF
937945Q	RED06L/04LLOMDCF
937946Q	RED06L/04ZLLCF
937947Q	RED08/06L71
937948Q	RED08/06LCF
937949Q	RED08/06LOMD71
937950Q	RED08/06LOMDCF
937951Q	RED08/06LVITCF
937952Q	RED08/06LVITOMDCF
937953Q	RED08/06S71
937954Q	RED08/06SCF
937955Q	RED08/06SOMD71
937956Q	RED08/06SOMDCF
937957Q	RED08/06SVITOMDCF

1111220122-01	M6RUM4-316	937964Q	RED08/06ZL71
1111223273-01	M6STWASHER-316	937965Q	RED08/06ZLCF
1111223281-01	M6TUBCM6-316	937966Q	RED08/06ZLVITCF
1111224121-01	M6TUC1-316	937972Q	RED08/06ZS71
1111231122-01	M6TUC2-316	937973Q	RED08/06ZSCF
1111292043-01	M6TUC4-316	937974Q	RED10/06L71
1111300006-01	M6TUELM6-316	937978Q	RED10/06LCF
1111300022-01	M6TURM10-316	937979Q	RED10/06LCRCF
1111300025-01	M6TURM10-IIY	937981Q	RED10/06LDPR71CF
1111300034-01	M6TURM10-M	937982Q	RED10/06LOMD71
1111300125-01	M6TURM10-TTZ	937984Q	RED10/06LOMDCF
11113-00180	M6TURM12-316	937985Q	RED10/06LVITCF
11113-00180	M6TURM12-6MO	937987Q	RED10/06LVITOMDCF
11113-00200	M6TURM14-316	937988Q	RED10/06S71
11113-00200	M6TURM3-316	937989Q	RED10/06SCF
11113-00220	M6TURM3-M	937990Q	RED10/06SOMD71
11113-00220	M6TURM3-NNR	937993Q	RED10/06SOMDCF
11113-00230	M6TURM4-316	938005Q	RED10/06ZL71
11113-00230	M6TURM8-316	938008Q	RED10/06ZLCF
11113-00250	M7.06-056PLI	938010Q	RED10/06ZLVITCF
11113-00250	M7.06-346PLI	938011Q	RED10/06ZS71
11113-00268	M8 ALOK-316-SET	938017Q	RED10/06ZSCF
11113-00268	M8 ALOK-M-SET	938019Q	RED10/08L71
11113-00300	M8 ENTLUEFTUNG	938020Q	RED10/08LCF
11113-00300	M812-5322	938021Q	RED10/08LDPR71CF
11113-00320	M812-5322	938028Q	RED10/08LOMD71
11113-00320	M812-5323	938029Q	RED10/08LOMDCF
11113-00330	M812-5323	938036Q	RED10/08LVITCF
11113-00330	M812-5323	938047Q	RED10/08LVITOMDCF
11113-00350	M812-5323	938048Q	RED10/08S71
11113-00350	M812-5324	938068Q	RED10/08SCF
11113-00360	M812-5324	938075Q	RED10/08SOMD71
11113-00360	M812-5332	938085Q	RED10/08SOMDCF
11113-00374	M812-5332	938086Q	RED10/08SVITCF
11113-00374	M812-5333	938093Q	RED10/08SVITOMDCF
11113-00375	M812-5333	938145Q	RED10/08ZL71
11113-00375	M812-5366	938158Q	RED10/08ZLCF
11113-00380	M812-5366	938159Q	RED10/08ZLVITCF
11113-00380	M812-5386	938160Q	RED10/08ZS71
11113-00400	M812-5386	938163Q	RED10/08ZSCF
11113-00400	M812-5387	938164Q	RED10L/08SVITOMDCF
11113-00410	M812-5387	938168Q	RED12/06L71
11113-00410	M812-5389	938169Q	RED12/06LCF
11113-00414	M812-5389	938172Q	RED12/06LOMD71
11113-00414	M812-5389	938173Q	RED12/06LOMDCF
11113-00440	M812-5389	938176Q	RED12/06LVITCF
11113-00440	M812-5408	938177Q	RED12/06LVITOMDCF
11113-00450	M812-5408	938180Q	RED12/06S71
11113-00450	M812-5408	938181Q	RED12/06SCF
11113-00476	M812-5408	938184Q	RED12/06SOMD71
11113-00476	M812-5412	938185Q	RED12/06SOMDCF
11113-00486	M812-5412	938188Q	RED12/06ZL71
11113-00486	M812-5454	938189Q	RED12/06ZLCF

11113-00500	M812-5454	938190Q	RED12/06ZLVITCF
11113-00500	M812-5455	938192Q	RED12/06ZS71
11113-00515	M812-5455	938193Q	RED12/06ZSCF
11113-00515	M812-5456	938194Q	RED12/08L71
11113-00520	M812-5456	938196Q	RED12/08LCF
11113-00520	M812-5457	938211Q	RED12/08LOMD71
11113-00530	M812-5457	938212Q	RED12/08LOMDCF
11113-00530	M812-5458	938213Q	RED12/08LVITCF
11113-00540	M812-5458	938214Q	RED12/08LVITOMDCF
11113-00540	M812-5459	938216Q	RED12/08S71
11113-00550	M812-5459	938217Q	RED12/08SCF
11113-00550	M812-5460	938220Q	RED12/08SOMD71
11113-00568	M812-5460	938221Q	RED12/08SOMDCF
11113-00568	M812-5461	938224Q	RED12/08SVITCF
11113-00590	M812-5461	938225Q	RED12/08SVITOMDCF
11113-00590	M812-5461	938228Q	RED12/08ZL71
11113-00600	M812-5461	938229Q	RED12/08ZLCF
11113-00600	M812-5462	938232Q	RED12/08ZLSSACF
11113-00625	M812-5462	938233Q	RED12/08ZLVITCF
11113-00625	M812MC6B	938236Q	RED12/08ZS71
11113-00650	M814-5059	938237Q	RED12/08ZSCF
11113-00650	M814-5059	938238Q	RED12/10L71
11113-00660	M814-5062	938240Q	RED12/10LCF
11113-00660	M814-5062	938241Q	RED12/10LCRCF
11113-00680	M814-5064	938244Q	RED12/10LOMD71
11113-00680	M814-5064	938245Q	RED12/10LOMDCF
11113-00690	M814-5066	938248Q	RED12/10LVITCF
11113-00690	M814-5066	938249Q	RED12/10LVITOMDCF
11113-00700	M814-5070	938251Q	RED12/10S71
11113-00700	M814-5070	938252Q	RED12/10SCF
11113-00720	M814-5073	938253Q	RED12/10SOMD71
11113-00720	M814-5073	938254Q	RED12/10SOMDCF
11113-00750	M814-5173	938255Q	RED12/10SVITCF
11113-00750	M814-5173	938256Q	RED12/10SVITOMDCF
11113-00755	M814-5173	938257Q	RED12/10ZL71
11113-00755	M814-5173	938258Q	RED12/10ZLCF
11113-00800	M814-5175	938259Q	RED12/10ZS71
11113-00800	M814-5175	938260Q	RED12/10ZSCF
11113-00820	M814-5298	938261Q	RED12/10ZSVITCF
11113-00820	M814-5298	938262Q	RED14/06SCF
11113-00830	M814-5368	938263Q	RED14/06SOMD71
11113-00830	M814-5368	938264Q	RED14/06SOMDCF
11113-00840	M84W6B-XS	938265Q	RED14/06SVITOMDCF
11113-00840	M850-5438	938266Q	RED14/08SCF
11113-00850	M850-5438	938267Q	RED14/08SOMD71
11113-00850	M857-5059	938268Q	RED14/08SOMDCF
11113-00895	M857-5059	938269Q	RED14/08ZSCF
11113-00895	M857-5064	938270Q	RED14/10S71
11113-00900	M857-5064	938271Q	RED14/10SCF
11113-00900	M857-5064	938272Q	RED14/10SOMD71
11113-00925	M857-5064	938273Q	RED14/10SOMDCF
11113-00925	M857-5066	938274Q	RED14/10ZS71
11113-00950	M857-5066	938275Q	RED14/10ZSCF

11113-00950	M857-5070	938276Q	RED14/12S71
11113-01000	M857-5070	938277Q	RED14/12SCF
11113-01000	M857-5073	938278Q	RED14/12SOMD71
11113-01010	M857-5073	938279Q	RED14/12SOMDCF
11113-01010	M857-5149	938280Q	RED14/12ZS71
11113-01020	M857-5149	938281Q	RED14/12ZSCF
11113-01020	M857-5183	938282Q	RED15/06L71
11113-01100	M857-5183	938283Q	RED15/06LCF
11113-01100	M857-5184	938284Q	RED15/06LDPR71CF
11113-01150	M857-5184	938285Q	RED15/06LOMD71
11113-01150	M857-5185	938286Q	RED15/06LOMDCF
11113-01174	M857-5185	938287Q	RED15/06LVITOMDCF
11113-01174	M857-5298	938288Q	RED15/06ZL71
11113-01200	M857-5298	938289Q	RED15/06ZLCF
11113-01200	M857-5298	938290Q	RED15/06ZLVITCF
11113-01250	M857-5298	938291Q	RED15/08L71
11113-01250	M857-5365	938292Q	RED15/08LCF
11113-01281	M857-5365	938293Q	RED15/08LDPR71CF
11113-01281	M857-5365	938294Q	RED15/08LOMD71
11113-01297	M857-5365	938295Q	RED15/08LOMDCF
11113-01297	M857-5443	938296Q	RED15/08LVITCF
11113-01300	M857-5443	938297Q	RED15/08LVITOMDCF
11113-01300	M857-5443	938298Q	RED15/08ZL71
11113-01350	M857-5443	938299Q	RED15/08ZLCF
11113-01350	M86KC9B	938300Q	RED15/08ZLNBR71
11113-01370	M86MC6B	938301Q	RED15/08ZLVITCF
11113-01370	M870-5262	938302Q	RED15/10L71
11113-01400	M870-5262	938303Q	RED15/10LCF
11113-01400	M870-5300	938304Q	RED15/10LDPR71CF
11113-01480	M870-5300	938305Q	RED15/10LMS
11113-01480	M870-5301	938306Q	RED15/10LOMD71
11113-01500	M870-5301	938307Q	RED15/10LOMDCF
11113-01500	M870-5302	938308Q	RED15/10LOMDMS
11113-01600	M870-5302	938309Q	RED15/10LVITCF
11113-01600	M870-5302	938310Q	RED15/10LVITOMDCF
11113-01645	M870-5302	938311Q	RED15/10ZL71
11113-01645	M870-5303	938312Q	RED15/10ZLCF
11113-01650	M870-5303	938313Q	RED15/12L71
11113-01650	M870-5303	938314Q	RED15/12LCF
11113-01680	M870-5303	938315Q	RED15/12LOMD71
11113-01680	M870-5304	938316Q	RED15/12LOMDCF
11113-01700	M870-5304	938317Q	RED15/12LVITCF
11113-01700	M870-5305	938319Q	RED15/12LVITOMDCF
11113-01705	M870-5305	938320Q	RED15/12ZL71
11113-01705	M870-5307	938323Q	RED15/12ZLCF
11113-01725	M870-5307	938324Q	RED15/12ZLVITCF
11113-01725	M89KC9B	938327Q	RED15/18L71
11113-01750	M89MC6B	938328Q	RED15/22L71
11113-01750	M89W6B-XXS	938331Q	RED15/28LOMDCF
11113-01774	M8A-B6LJ2-BN-SSP	938332Q	RED16/06SCF
11113-01774	M8A-B6LJ2-EPR-SSP	938333Q	RED16/06SOMD71
11113-01800	M8A-B6LJ2-SSP	938335Q	RED16/06SOMDCF
11113-01800	M8A-B6LJ2-SSP-C3	938336Q	RED16/06ZS71

11113-01810	M8A-B6LJ2-V-SSP
11113-01810	M8A-B6LJ-SSP
11113-01820	M8A-B6XJ2-SSP
11113-01820	M8A-B6XJ2-SSP-C3
11113-01850	M8A-B6XJ-SSP
11113-01850	M8A-B6XS2-SSP
11113-01974	M8A-C6L-1/3-BN-SS
11113-01974	M8A-C6L-1/3-EPR-SS
11113-02000	M8A-C6L-1/3-SS
11113-02000	M8A-C6L-100-BN-SS
1111302001-01	M8A-C6L-100-SS
11113-02010	M8A-C6L-10-BN-SS
11113-02010	M8A-C6L-10-SS
11113-02050	M8A-C6L-10-SS-C3
11113-02050	M8A-C6L-1-B
11113-02110	M8A-C6L-1-BN-B
11113-02110	M8A-C6L-1-BN-SS
11113-02200	M8A-C6L-1-EPR-SS
11113-02200	M8A-C6L-1-SS
11113-02210	M8A-C6L-1-SS-C3
11113-02210	M8A-C6L-25-B
11113-02220	M8A-C6L-25-BN-SS
11113-02220	M8A-C6L-25-SS
11113-02250	M8A-C6L-50-SS
11113-02250	M8A-C6L-5-B
11113-02290	M8A-C6L-5-EPR-SS
11113-02290	M8A-C6L-5-SS
11113-02374	M8A-C6L-75-EPR-SS
11113-02374	M8A-C6L-75-SS
11113-02450	M8A-CO6L-1/3-V-SS
11113-02450	M8A-CO6L-10-EPR-SS
11113-02540	M8A-CO6L-1-KZ-SS
11113-02540	M8A-CO6L-25-V-SS
11113-02600	M8A-CO6L-5-V-SS
11113-02600	M8A-F6L-100-SS
11113-02630	M8A-F6L-5-SS
11113-02630	M8A-MB6LPFA-BP
11113-02755	M8A-MB6LPFA-SSP
11113-02755	M8A-MB6LPFA-SSP-C3
11113-02774	M8A-MB6XPFA-SSP
11113-02774	M8A-MB6XPFA-SSP-C3
11113-02800	M8A-PR6-BNT-SS
11113-02800	M8A-PR6-EPRT-SS
11113-02900	M8A-PR6-VT-SS
11113-02900	M8A-SWB4L-RT-V-SS
11113-03115	M8A-U6LB-G-SS-HT
11113-03115	M8A-U6LB-T-SS
11113-03150	M8A-U6LR-G-SS
11113-03150	M8A-U6LR-G-SS-HT
11113-03200	M8A-U6LR-T-SS
11113-03200	M8A-U6LR-T-SS-HT
11113-03250	M8A-V4AN-SS
11113-03250	M8A-V4AR-SS

938339Q	RED16/06ZSCF
938340Q	RED16/08S71
938343Q	RED16/08SCF
938344Q	RED16/08SOMD71
938347Q	RED16/08SOMDCF
938348Q	RED16/08SVITCF
938351Q	RED16/08SVITOMDCF
938352Q	RED16/08ZS71
938355Q	RED16/08ZSCF
938356Q	RED16/08ZSVITCF
938358Q	RED16/10S71
938359Q	RED16/10SCF
938360Q	RED16/10SOMD71
938373Q	RED16/10SOMDCF
938416Q	RED16/10SVITCF
938418Q	RED16/10ZS71
938424Q	RED16/10ZSCF
938519Q	RED16/12S71
938530Q	RED16/12SCF
938539Q	RED16/12SOMD71
938544Q	RED16/12SOMDCF
938561Q	RED16/12SVITCF
938569Q	RED16/12SVITOMDCF
938579Q	RED16/12ZS71
938596Q	RED16/12ZSCF
938597Q	RED16/12ZSVITCF
938599Q	RED16/14S71
938602Q	RED16/14SCF
938609Q	RED16/14SOMD71
938621Q	RED16/14SOMDCF
938626Q	RED16/14SVITOMDCF
938627Q	RED16/14ZSCF
938721Q	RED16S/12LOMDCF
938722Q	RED16S/15L71
938723Q	RED16S/15LCF
938724Q	RED16S/15LOMD71
938725Q	RED16S/15LOMDCF
938726Q	RED16S/15LVITOMDCF
938727Q	RED16S/15ZLCF
938728Q	RED18/06L71
938733Q	RED18/06LCF
938734Q	RED18/06LOMD71
938735Q	RED18/06LOMDCF
938736Q	RED18/06LVITCF
938737Q	RED18/06LVITOMDCF
938738Q	RED18/06ZL71
938739Q	RED18/06ZLCF
938740Q	RED18/08L71
938771Q	RED18/08LCF
938773Q	RED18/08LCRCF
938774Q	RED18/08LOMD71
938775Q	RED18/08LOMDCF
938776Q	RED18/08LVITCF

11113-03370	M8A-V4LK-SS
11113-03370	M8A-V4LK-V-SS
11113-03500	M8A-V4LN-SS
11113-03500	M8A-V4LN-SS-C3
11113-03610	M8A-V4LQ-KZ-11AC-SS
11113-03610	M8A-V4LR-EPR-SS-C3
11113-03650	M8A-V4LR-SS
11113-03650	M8A-V4LR-SS-OXY
11113-03840	M8CU4-316
11113-03840	M8CU4-6MO
11113-04050	M8CU6-316
11113-04050	M8CU6-M
11113-04140	M8FA1/2N-316
11113-04140	M8FA1/4N-316
11113-05300	M8FA1/4R-316
11113-05300	M8FA1/8R-316
1111310007-01	M8FA3/8N-316
1111330102-01	M8FAGC1/2R-316
11114-00125	M8FAGC1/4R-316
11114-00125	M8FBC1/2N-316
11114-00160	M8FBC1/8N-316
11114-00160	M8FBT1/8N-316
11114-00170	M8FBT1/8R-316
11114-00170	M8FEL1/2N-316
11114-00200	M8FEL1/4N-316
11114-00200	M8FEL1/4N-6MO
11114-00206	M8FEL1/4N-B
11114-00206	M8FEL1/8N-316
11114-00220	M8FRT1/8N-316
11114-00220	M8FSC1/2K-316
11114-00250	M8FSC1/2N-316
11114-00250	M8FSC1/2N-M
11114-00300	M8FSC1/2R-316
11114-00300	M8FSC1/4K-316
11114-00320	M8FSC1/4N-316
11114-00320	M8FSC1/4N-6MO
11114-00325	M8FSC1/4N-B
11114-00325	M8FSC1/4N-M
11114-00340	M8FSC1/4R-316
11114-00340	M8FSC1/8N-316
11114-00350	M8FSC1/8N-B
11114-00350	M8FSC3/4N-316
11114-00375	M8FSC3/8K-316
11114-00375	M8FSC3/8N-316
11114-00380	M8FSC3/8R-316
11114-00380	M8GC1/2R-316
11114-00384	M8GC1/2R-B
11114-00384	M8GC1/2R-M
11114-00400	M8GC1/4R-316
11114-00400	M8GC1/4R-B
11114-00410	M8GC3/8R-316
11114-00410	M8GC3/8R-B
11114-00415	M8GC3/8R-M

938777Q	RED18/08LVITOMDCF
938778Q	RED18/08ZL71
938779Q	RED18/08ZLCF
938780Q	RED18/10L71
938781Q	RED18/10LCF
938782Q	RED18/10LCRCF
938783Q	RED18/10LDPR71CF
938784Q	RED18/10LMS
938785Q	RED18/10LOMD71
938786Q	RED18/10LOMDCF
938787Q	RED18/10LVITCF
938788Q	RED18/10LVITOMDCF
938789Q	RED18/10ZL71
938790Q	RED18/10ZLCF
938791Q	RED18/10ZLVITCF
938793Q	RED18/10ZLVITSSACF
938794Q	RED18/12L71
938795Q	RED18/12LCF
938796Q	RED18/12LCRCF
938797Q	RED18/12LDPR71CF
938798Q	RED18/12LOMD71
938799Q	RED18/12LOMDCF
938800Q	RED18/12LVITCF
938801Q	RED18/12LVITOMDCF
938802Q	RED18/12ZL71
938804Q	RED18/12ZLCF
938805Q	RED18/12ZLVITCF
938807Q	RED18/15L71
938808Q	RED18/15LCF
938809Q	RED18/15LDPR71CF
938812Q	RED18/15LOMD71
938813Q	RED18/15LOMDCF
938815Q	RED18/15LVITCF
938816Q	RED18/15LVITOMDCF
938961Q	RED18/15ZL71
938962Q	RED18/15ZLCF
938963Q	RED18L/16SCF
938966Q	RED18L/16SOMD71
938967Q	RED18L/16SOMDCF
938969Q	RED18L/16SVITCF
938970Q	RED18L/16SVITOMDCF
938971Q	RED18L/16ZSCF
938972Q	RED20/06SCF
938973Q	RED20/06SOMD71
938977Q	RED20/06SOMDCF
938978Q	RED20/06ZSCF
938979Q	RED20/08S71
938982Q	RED20/08SCF
938983Q	RED20/08SOMD71
938986Q	RED20/08SOMDCF
938987Q	RED20/08SVITCF
938990Q	RED20/08SVITOMDCF
938991Q	RED20/08ZS71

11114-00415	M8MA1/2N-316
11114-00450	M8MA1/4K-316
11114-00450	M8MA1/4N-316
11114-00460	M8MA1/4N-625
11114-00460	M8MA1/4N-6MO
11114-00475	M8MA1/4N-M
11114-00475	M8MA1/4R-316
11114-00480	M8MA1/8R-316
11114-00480	M8MA3/8N-316
11114-00485	M8MA3/8R-316
11114-00485	M8MBC1/4N-316
11114-00500	M8MBC1/8N-316
11114-00500	M8MBT1/4K-316
11114-00515	M8MBT1/4N-316
11114-00515	M8MBT1/4N-6MO
11114-00540	M8MBT1/4N-IIY
11114-00540	M8MBT1/8R-316
11114-00550	M8MBT3/8N-316
11114-00550	M8MRT1/4N-316
11114-00570	M8MRT1/4N-6MO
11114-00570	M8MRT1/4N-IIY
11114-00600	M8MRT1/4N-M
11114-00600	M8MSC1/2BR-316
11114-00620	M8MSC1/2K-316
11114-00620	M8MSC1/2K-B
11114-00630	M8MSC1/2K-M
11114-00630	M8MSC1/2N-316
11114-00640	M8MSC1/2N-6MO
11114-00640	M8MSC1/2N-B
11114-00650	M8MSC1/2N-M
11114-00650	M8MSC1/2N-NNR
11114-00665	M8MSC1/2R-316
11114-00665	M8MSC1/2R-B
11114-00690	M8MSC1/2R-ED-316
11114-00690	M8MSC1/2R-M
11114-00700	M8MSC1/4BR-316
11114-00700	M8MSC1/4K-316
11114-00720	M8MSC1/4K-6MO
11114-00720	M8MSC1/4K-B
11114-00740	M8MSC1/4K-M
11114-00740	M8MSC1/4N-316
11114-00750	M8MSC1/4N-6MO
11114-00750	M8MSC1/4N-B
11114-00760	M8MSC1/4N-IIY
11114-00760	M8MSC1/4N-M
11114-00800	M8MSC1/4N-NNR
11114-00800	M8MSC1/4R-316
11114-00820	M8MSC1/4R-B
11114-00820	M8MSC1/4R-M
11114-00820E	M8MSC1/8BR-316
11114-00820E	M8MSC1/8K-316
11114-00850	M8MSC1/8K-B
11114-00850	M8MSC1/8N-316

939011Q	RED20/08ZSCF
939060Q	RED20/10S71
939061Q	RED20/10SCF
939062Q	RED20/10SOMD71
939063Q	RED20/10SOMDCF
939065Q	RED20/10SVITCF
939066Q	RED20/10SVITOMDCF
939067Q	RED20/10ZS71
939100Q	RED20/10ZSCF
939101Q	RED20/10ZSVITCF
939102Q	RED20/12S71
939103Q	RED20/12SCF
939104Q	RED20/12SOMD71
939106Q	RED20/12SOMDCF
939107Q	RED20/12SVITCF
939109Q	RED20/12SVITOMDCF
939110Q	RED20/12ZS71
939113Q	RED20/12ZSCF
939114Q	RED20/14S71
939-12	RED20/14SCF
939159Q	RED20/14SOMD71
939-16	RED20/14SOMDCF
939173Q	RED20/14SVITOMDCF
939206Q	RED20/14ZSCF
939223Q	RED20/16S71
939-24	RED20/16SCF
939244Q	RED20/16SNBROMD71
939245Q	RED20/16SOMD71
939246Q	RED20/16SOMDCF
939324Q	RED20/16SVITCF
939326Q	RED20/16SVITOMDCF
939329Q	RED20/16ZS71
939334Q	RED20/16ZSCF
939335Q	RED20/16ZSVITCF
939381Q	RED20S/10LOMDCF
939382Q	RED20S/12LOMDCF
939388Q	RED20S/15LCF
939401Q	RED20S/15LOMD71
939402Q	RED20S/15LOMDCF
939403Q	RED20S/15ZLCF
939723Q	RED20S/18L71
939725Q	RED20S/18LCF
939728Q	RED20S/18LOMD71
939732Q	RED20S/18LOMDCF
939741Q	RED20S/18LVITOMDCF
939747Q	RED20S/18ZLCF
939758Q	RED20S/22LOMDCF
939760Q	RED22/06L71
939767Q	RED22/06LCF
939775Q	RED22/06LOMD71
939776Q	RED22/06LOMDCF
939777Q	RED22/06LVITCF
939778Q	RED22/06LVITOMDCF

11114-00860	M8MSC1/8N-6MO	939782Q	RED22/06ZLCF
11114-00860	M8MSC1/8N-B	939787Q	RED22/08L71
11114-00880	M8MSC1/8N-M	939788Q	RED22/08LCF
11114-00880	M8MSC1/8R-316	939826Q	RED22/08LOMD71
11114-00900	M8MSC1/8R-B	939827Q	RED22/08LOMDCF
11114-00900	M8MSC1/8R-ED-316	939830Q	RED22/08LOMDCFVOL
11114-00915	M8MSC1/8R-M	939831Q	RED22/08LVITCF
11114-00915	M8MSC3/8BR-316	939834Q	RED22/08LVITOMDCF
11114-00920	M8MSC3/8K-316	939854Q	RED22/08ZL71
11114-00920	M8MSC3/8K-6MO	939950Q	RED22/08ZLCF
11114-00921	M8MSC3/8K-B	9399E	RED22/08ZLVITCF
11114-00921	M8MSC3/8N-316	939B-12	RED22/10L71
11114-00950	M8MSC3/8N-B	939B-16	RED22/10LCF
11114-00950	M8MSC3/8N-M	939B-24	RED22/10LDPR71CF
11114-00981	M8MSC3/8R-316	939B-8	RED22/10LOMD71
11114-00981	M8MSC3/8R-B	93KFIW21SVN	RED22/10LOMDCF
11114-00990	M8MSC3/8R-ED-316	93KFTF09SVN	RED22/10LVITCF
11114-00990	M8MSC3/8R-M	93KFTF13SVN	RED22/10LVITOMDCF
11114-01000	M8MSCM10X1.0-316	93KLAW17SVN	RED22/10ZL71
11114-01000	M8MSCM12X1.5-316	93KLIN21SVN	RED22/10ZLCF
11114-01050	M8MSCM12X1-316	93KLIW13SVN	RED22/10ZLVITCF
11114-01050	M8MSCM14X1.5-316	93KLIW21SVN	RED22/12L71
11114-01100	M8MSEL1/2K-316	93KLTF09SVN	RED22/12LCF
11114-01100	M8MSEL1/2N-316	93KLTF13SVN	RED22/12LCRCF
11114-01125	M8MSEL1/2N-6MO	93KLTZ12EEXS	RED22/12LDPR71CF
11114-01125	M8MSEL1/2N-B	93KLTZ16EEXS	RED22/12LOMD71
11114-01150	M8MSEL1/2N-IIY	93SFIW21SXN	RED22/12LOMDCF
11114-01150	M8MSEL1/2N-M	93SFTF09SXN	RED22/12LVITCF
11114-01200	M8MSEL1/4K-316	93SFTF13SXN	RED22/12LVITOMDCF
11114-01200	M8MSEL1/4K-B	93SLAW17SVN	RED22/12ZL71
11114-01240	M8MSEL1/4N-316	93SLIN21SVN	RED22/12ZLCF
11114-01240	M8MSEL1/4N-6MO	93SLIW13SVN	RED22/12ZLVITCF
11114-01250	M8MSEL1/4N-B	93SLIW21SVN	RED22/15L71
11114-01250	M8MSEL1/4N-IIY	93SLTF09SVN	RED22/15LCF
11114-01270	M8MSEL1/4N-M	93SLTF13SVN	RED22/15LDPR71CF
11114-01270	M8MSEL1/4R-316	9-4 TRBMP7-SS	RED22/15LMS
11114-01300	M8MSEL1/8K-316	9-4 X42HBMP7-SS	RED22/15LOMD71
11114-01300	M8MSEL1/8K-B	9401A06 13	RED22/15LOMDCF
11114-01350	M8MSEL1/8N-316	9401A06 17	RED22/15LVITCF
11114-01350	M8MSEL1/8N-B	9401A06 21	RED22/15LVITOMDCF
11114-01352	M8MSEL1/8N-M	9401E07 13	RED22/15LVOMDBLKOEL
11114-01352	M8MSEL3/8K-316	9401E07 17	RED22/15ZL71
11114-01400	M8MSEL3/8N-316	9401E07 21	RED22/15ZLCF
11114-01400	M8MSEL3/8N-M	9401U06 13	RED22/15ZLSSACF
11114-01470	M8MSEL3/8R-316	9401U06 17	RED22/18L71
11114-01470	M8MTC1/2R-316	9401U06 21	RED22/18LCF
11114-01500	M8MTC1/4N-316	9401U08 13	RED22/18LCRCF
11114-01500	M8MTC1/4N-IIY	9401U08 17	RED22/18LOMD71
11114-01530	M8MTC1/4R-316	9401U08 21	RED22/18LOMDCF
11114-01530	M8MTC3/8N-316	9405A06 13	RED22/18LVITCF
11114-01550	M8MVEL1/8N-316	9405A06 17	RED22/18LVITOMDCF
11114-01550	M8PCM10-316	9405A06 21	RED22/18ZL71
11114-01600	M8PCM12-316	9405E07 13	RED22/18ZLCF

11114-01600	M8RUM4-316	9405G	RED22/18ZLVITCF
11114-01625	M8RUM6-316	9405U06 13	RED22/28L71
11114-01625	M8RUM6-316-OXY	9405U06 17	RED22L/16S71
11114-01650	M8RUM6-6MO	9405U06 21	RED22L/16SCF
11114-01650	M8RUM6-B	9405U08 13	RED22L/16SOMD71
11114-01700	M8RUM6-M	9405U08 17	RED22L/16SOMDCF
11114-01700	M8TUC4-316	9405U08 21	RED22L/16SVITOMDCF
11114-01750	M8TUC8-316	9410A06 08	RED22L/16ZSCF
11114-01750	M8TURM10-316	9410A06 10	RED22L/20SCF
11114-01752	M8TURM12-316	9410E07 10	RED22L/20SOMD71
11114-01752	M8TURM12-M	9410E07 12	RED22L/20SOMDCF
11114-01770	M8TURM18-316	9410U06 08	RED22L/20ZSCF
11114-01770	M8TURM6-316	9410U06 10	RED25/06SCF
11114-01800	M971-3346	9410U08 10	RED25/06SOMD71
11114-01800	M971-3346	9410U08 12	RED25/06SOMDCF
11114-01850	M971-3347	9414A06 13	RED25/06ZSCF
11114-01850	M971-3347	9414A06 17	RED25/08S71
11114-01880	M971-3348	9414A06 21	RED25/08SCF
11114-01880	M971-3348	9414E07 13	RED25/08SOMD71
11114-02000	M971-3349	9414E07 17	RED25/08SOMDCF
11114-02000	M971-3349	9414E07 21	RED25/08SVITCF
11114-02002	M971-3350	9414U06 13	RED25/08SVITOMDCF
11114-02002	M971-3350	9414U06 17	RED25/08ZSCF
11114-02020	M971-3542	9414U06 21	RED25/08ZSVITCF
11114-02020	M971-3542	9414U08 13	RED25/10S71
11114-02030	M971-3544	9414U08 17	RED25/10SCF
11114-02030	M971-3544	9414U08 21	RED25/10SOMD71
11114-02150	M978-3389	9416A06 13	RED25/10SOMDCF
11114-02150	M978-3389	9416E07 17	RED25/10SVITOMDCF
11114-02220	M978-3407	9416U06 13	RED25/10ZS71
11114-02220	M978-3407	9416U08 17	RED25/10ZSCF
11114-02230	MA-1	941907EX24	RED25/12S71
11114-02230	MA-1	942126E	RED25/12SCF
11114-02250	MAB500003	9421A06 06	RED25/12SOMD71
11114-02250	MACH 6/7 15LB	9421A06 08	RED25/12SOMDCF
11114-02300	MACH 6/7 15LT	9421A06 10	RED25/12SVITCF
11114-02300	MACH 7B	9421E07 08	RED25/12SVITOMDCF
11114-02400	MACH 7T	9421E07 10	RED25/12ZS71
11114-02400	MACH 8900213	9421E07 13	RED25/12ZSCF
11114-02500	MACH 8900214	9421U06 06	RED25/14S71
11114-02500	MACH 8900226	9421U06 08	RED25/14SCF
11114-02650	MACH 8900227	9421U06 10	RED25/14SOMD71
11114-02650	MACH A	9421U08 08	RED25/14SOMDCF
11114-02675	MACH2-IA-B	9421U08 10	RED25/14SVITOMDCF
11114-02675	MACH2-IA-P	9421U08 13	RED25/14ZS71
11114-02700	MACH4/715LB	943502Q	RED25/14ZSCF
11114-02700	MACH4/715LT	943503Q	RED25/16S71
11114-02800	MAG1413/130	943506Q	RED25/16SCF
11114-02800	MAG7015	943507Q	RED25/16SOMD71
11114-03300	MAGL40	943510Q	RED25/16SOMDCF
11114-03300	MAN 04	943511Q	RED25/16SVITCF
11115-00100	MAN 05	943514Q	RED25/16SVITOMDCF
11115-00100	MAN 06	943515Q	RED25/16ZS71

11115-00160	MAN 06	943518Q	RED25/16ZSCF
11115-00160	MAN 07	943519Q	RED25/16ZSVITCF
11115-00170	MAN 07	943522Q	RED25/20S71
11115-00170	MAN 08	943523Q	RED25/20SCF
11115-00200	MAN 08	943526Q	RED25/20SOMD71
11115-00200	MAN 09	943527Q	RED25/20SOMDCF
11115-00220	MAN 09	943613Q	RED25/20SVITCF
11115-00220	MAN 12	943615Q	RED25/20SVITOMDCF
11115-00225	MAN 12	943616Q	RED25/20ZS71
11115-00225	MAN 13	943619Q	RED25/20ZSCF
11115-00250	MAN 13	943620Q	RED25S/10LOMDCF
11115-00250	MAN 14	943623Q	RED25S/15LOMDCF
11115-00300	MAN 14	943624Q	RED25S/18L71
11115-00300	MAN 15	943627Q	RED25S/18LCF
11115-00325	MAN-1-111112SX	943628Q	RED25S/18LOMD71
11115-00325	MAN-1-111113SX	943631Q	RED25S/18LOMDCF
11115-00350	MAN-1-111114CFX	943632Q	RED25S/18ZLCF
11115-00350	MAN-1-111118SX	943635Q	RED25S/22LCF
11115-00380	MAN-2-111111SX	943636Q	RED25S/22LOMD71
11115-00380	MANI1X1/4X1/8X2	943639Q	RED25S/22LOMDCF
11115-00400	MANI1X1/4X1/8X3	943640Q	RED25S/22ZLCF
11115-00400	MANI1X1/4X1/8X4	943643Q	RED28/06LCF
11115-00450	MANI1X1/4X1/8X5	943644Q	RED28/06LOMDCF
11115-00450	MANI1X1/4X1/8X6	943647Q	RED28/06LVITOMDCF
11115-00500	MANI1X3/8X1/4X2	943648Q	RED28/06ZLCF
11115-00500	MANI1X3/8X1/4X3	943651Q	RED28/08L71
11115-00520	MANI1X3/8X1/4X4	943652Q	RED28/08LCF
11115-00520	MANI1X3/8X1/4X5	943655Q	RED28/08LOMD71
11115-00550	MANI1X3/8X1/4X6	943656Q	RED28/08LOMDCF
11115-00550	MANI2X1/4X1/8X2	943659Q	RED28/08LVITCF
11115-00560	MANI2X1/4X1/8X3	943660Q	RED28/08LVITOMDCF
11115-00560	MANI2X1/4X1/8X4	943663Q	RED28/08ZL71
11115-00600	MANI2X1/4X1/8X5	943664Q	RED28/08ZLCF
11115-00600	MANI2X3/8X1/4X2	943667Q	RED28/10L71
11115-00620	MANI2X3/8X1/4X3	943668Q	RED28/10LCF
11115-00620	MANI2X3/8X1/4X4	943671Q	RED28/10LDPR71CF
11115-00650	MANI2X3/8X1/4X5	943672Q	RED28/10LOMD71
11115-00650	MANIF1/2KMO4DL	943705Q	RED28/10LOMDCF
11115-00700	MANIF1/4KMO4DL	943706Q	RED28/10LVITCF
11115-00700	MANIF1/8KMO4DL	943709Q	RED28/10LVITOMDCF
11115-00720	MANIF3/8KMO4DL	943710Q	RED28/10ZL71
11115-00720	MATCERT3.1KQB	943713Q	RED28/10ZLCF
11115-00750	MAV04LLRCF	943714Q	RED28/10ZLVITCF
11115-00750	MAV04LLROMDCF	943717Q	RED28/12L71
11115-00770	MAV06LR1/271	943718Q	RED28/12LCF
11115-00770	MAV06LR1/2CF	943721Q	RED28/12LOMD71
11115-00800	MAV06LR1/2MS	943722Q	RED28/12LOMDCF
11115-00800	MAV06LR1/2SPH71	943725Q	RED28/12LVITCF
11115-00805	MAV06LR71	943726Q	RED28/12LVITOMDCF
11115-00805	MAV06LR71X	943729Q	RED28/12ZL71
11115-00830	MAV06LRCF	943730Q	RED28/12ZLCF
11115-00830	MAV06LRCFX	943731Q	RED28/15L71
11115-00850	MAV06LRMS	943733Q	RED28/15LCF

11115-00850	MAV06LROMD71
11115-00900	MAV06LROMDCF
11115-00900	MAV06SR1/4CF
11115-00910	MAV06SR1/4MS
11115-00910	MAV06SR1/4OMDCF
11115-01000	MAV06SR3/8CFX
11115-01000	MAV06SR71
11115-01020	MAV06SR71X
11115-01020	MAV06SRCF
11115-01050	MAV06SRMS
11115-01050	MAV06SROMD71
11115-01085	MAV06SROMDCF
11115-01085	MAV06ZLR71
11115-01100	MAV06ZLRCF
11115-01100	MAV06ZLRVITCF
11115-01120	MAV06ZSR71
11115-01120	MAV06ZSRCF
11115-01175	MAV08LR71
11115-01175	MAV08LR71X
11115-01180	MAV08LRCF
11115-01180	MAV08LRCFX
11115-01200	MAV08LRMS
11115-01200	MAV08LROMD71
11115-01250	MAV08LROMDCF
11115-01250	MAV08SR1/471
11115-01260	MAV08SR1/471X
11115-01260	MAV08SR1/4CF
11115-01275	MAV08SR1/4OMDCF
11115-01275	MAV08SR3/8CF
11115-01350	MAV08SR71
11115-01350	MAV08SR71X
11115-01400	MAV08SRCF
11115-01400	MAV08SRCFX
11115-01450	MAV08SRMS
11115-01450	MAV08SROMD71
11115-01500	MAV08SROMDCF
11115-01500	MAV08ZLR71
11115-01550	MAV08ZLRCF
11115-01550	MAV08ZLRVITCF
11115-01600	MAV08ZSR71
11115-01600	MAV08ZSRCF
11115-01620	MAV08ZSRVITCF
11115-01620	MAV1/2MA1CF
11115-01630	MAV1/2MA371
11115-01630	MAV1/2MA3CF
11115-01650	MAV1/2MA4
11115-01650	MAV1/4MA1CF
11115-01700	MAV1/4MA371
11115-01700	MAV1/4MA3CF
11115-01800	MAV1/4MA3VITCF
11115-01800	MAV1/4MA4
11115-01850	MAV1/4NPTMA3CF
11115-01850	MAV1/4NPTMA3KMCF

943734Q	RED28/15LDPR71CF
943737Q	RED28/15LOMD71
943738Q	RED28/15LOMDCF
943741Q	RED28/15LVITCF
943742Q	RED28/15LVITOMDCF
943795Q	RED28/15ZL71
943796Q	RED28/15ZLCF
943799Q	RED28/15ZLVITCF
943800Q	RED28/18L71
943803Q	RED28/18LCF
943804Q	RED28/18LDPR71CF
943807Q	RED28/18LOMD71
943808Q	RED28/18LOMDCF
943811Q	RED28/18LVITCF
943812Q	RED28/18LVITOMDCF
943815Q	RED28/18ZL71
943816Q	RED28/18ZLCF
943819Q	RED28/18ZLVITCF
943820Q	RED28/22L71
943823Q	RED28/22LCF
943824Q	RED28/22LDPR71CF
943827Q	RED28/22LOMD71
943828Q	RED28/22LOMDCF
943880Q	RED28/22LOMDMS
943881Q	RED28/22LVITCF
943888Q	RED28/22LVITOMDCF
943889Q	RED28/22ZL71
943896Q	RED28/22ZLCF
943897Q	RED28/22ZLVITCF
943904Q	RED28/35LOMDCF
943905Q	RED28/42LOMDCF
943912Q	RED28L/16SCF
943913Q	RED28L/16SOMD71
943920Q	RED28L/16SOMDCF
943921Q	RED28L/16SVIOMDCF
943928Q	RED28L/16ZSCF
943929Q	RED28L/20SOMDCF
943936Q	RED28L/25SCF
943937Q	RED28L/25SOMD71
943944Q	RED28L/25SOMDCF
943945Q	RED28L/25SVIOMDCF
943952Q	RED28L/25ZSCF
943953Q	RED30/06SCF
943960Q	RED30/06SOMD71
943961Q	RED30/06SOMDCF
943968Q	RED30/06ZSCF
943969Q	RED30/08SCF
943976Q	RED30/08SOMD71
943977Q	RED30/08SOMDCF
943984Q	RED30/08SVITCF
943985Q	RED30/08SVITOMDCF
943992Q	RED30/08ZSCF
943993Q	RED30/10S71

11115-02000	MAV10LR71	944022Q	RED30/10SCF
11115-02000	MAV10LR71X	944033Q	RED30/10SOMD71
11115-02200	MAV10LRCF	944035Q	RED30/10SOMDCF
11115-02200	MAV10LRCFX	944047Q	RED30/10ZSCF
11115-02300	MAV10LRMS	944060Q	RED30/12S71
11115-02300	MAV10LRMSX	944064Q	RED30/12SCF
11115-02350	MAV10LROMD71	944067Q	RED30/12SOMD71
11115-02350	MAV10LROMDCF	944068Q	RED30/12SOMDCF
11115-03050	MAV10SR1/4CF	944072Q	RED30/12ZS71
11115-03050	MAV10SR1/4OMDCF	944073Q	RED30/12ZSCF
11115-03875	MAV10SR71	944075Q	RED30/14SCF
11115-03875	MAV10SRCF	944082Q	RED30/14SOMDCF
11115-04950	MAV10SRCFX	944083Q	RED30/14ZS71
11115-04950	MAV10SRMS	944084Q	RED30/16S71
11115-05000	MAV10SRMSX	944086Q	RED30/16SCF
11115-05000	MAV10SROMD71	944093Q	RED30/16SOMD71
11115-05350	MAV10SROMDCF	944095Q	RED30/16SOMDCF
11115-05350	MAV10SRSA1171	944096Q	RED30/16SVITOMDCF
11116-00200	MAV10ZLR71	944098Q	RED30/16ZS71
11116-00200	MAV10ZLRCF	9440A06 17	RED30/16ZSCF
11116-00240	MAV10ZLRNBR71	9440E07 21	RED30/20S71
11116-00240	MAV10ZLRVITCF	9440U06 17	RED30/20SCF
11116-00300	MAV10ZSR71	9440U08 21	RED30/20SOMD71
11116-00300	MAV10ZSRCF	944282Q	RED30/20SOMDCF
11116-00400	MAV12LR1/271	944296Q	RED30/20SVITCF
11116-00400	MAV12LR1/2CF	944413Q	RED30/20SVITOMDCF
11116-00420	MAV12LR1/2OMD71	944418Q	RED30/20ZS71
11116-00420	MAV12LR71	944419Q	RED30/20ZSCF
11116-00480	MAV12LR71X	944420Q	RED30/25S71
11116-00480	MAV12LRCF	944421Q	RED30/25SCF
11116-00500	MAV12LRCFX	944426Q	RED30/25SOMD71
11116-00500	MAV12LRMS	944427Q	RED30/25SOMDCF
11116-00550	MAV12LROMD71	944428Q	RED30/25SVITCF
11116-00550	MAV12LROMDCF	944429Q	RED30/25SVITOMDCF
11116-00600	MAV12SR1/4CF	944430Q	RED30/25ZS71
11116-00600	MAV12SR1/4OMDCF	944431Q	RED30/25ZSCF
11116-00650	MAV12SR3/8CF	944432Q	RED30/25ZSVITCF
11116-00650	MAV12SR71	944433Q	RED30S/22LCF
11116-00700	MAV12SR71X	944434Q	RED30S/22LOMD71
11116-00700	MAV12SRCF	944435Q	RED30S/22LOMDCF
11116-00710	MAV12SRCFX	944436Q	RED30S/22LVITOMDCF
11116-00710	MAV12SRMS	944437Q	RED30S/22ZL71
11116-00750	MAV12SROMD71	944438Q	RED30S/22ZLCF
11116-00750	MAV12SROMDCF	944439Q	RED30S/28LCF
11116-00800	MAV12SRSPH71	944440Q	RED30S/28LOMD71
11116-00800	MAV12ZLR71	944441Q	RED30S/28LOMDCF
11116-00840	MAV12ZLRCF	944442Q	RED30S/28ZLCF
11116-00840	MAV12ZLRVITCF	944443Q	RED35/06LCF
11116-00900	MAV12ZSR71	944444Q	RED35/06LOMDCF
11116-00900	MAV12ZSRCF	944445Q	RED35/06LVITOMDCF
11116-01000	MAV14SR71X	944446Q	RED35/06ZLCF
11116-01000	MAV15LR1/2CF	944447Q	RED35/08LCF
11116-01020	MAV16SR71	944448Q	RED35/08LOMD71

11116-01020	MAV16SRCF
11116-01050	MAV16SRCFX
11116-01050	MAVE06LR71
11116-01100	MAVE06LRCF
11116-01100	MAVE06LRODKICF
11116-01150	MAVE06LRVITCF
11116-01150	MAVE06SR1/471
11116-01200	MAVE06SR1/4CF
11116-01200	MAVE06SR1/4VITCF
11116-01220	MAVE06SR71
11116-01220	MAVE06SRCF
11116-01250	MAVE08LR1/271
11116-01250	MAVE08LR1/2CF
11116-01300	MAVE08LR71
11116-01300	MAVE08LRCF
11116-01400	MAVE08LRNBR71
11116-01400	MAVE08LRODKICF
11116-01450	MAVE08LRODKIVITCF
11116-01450	MAVE08LRVITCF
11116-01500	MAVE08SR1/471
11116-01500	MAVE08SR1/4CF
11116-01520	MAVE08SR1/4VITCF
11116-01520	MAVE08SR71
11116-01580	MAVE08SRCF
11116-01580	MAVE08SRVITCF
11116-01600	MAVE10LM12X1.5CF
11116-01600	MAVE10LR71
11116-01700	MAVE10LRCF
11116-01700	MAVE10LRCRCF
11116-01800	MAVE10LRODKICF
11116-01800	MAVE10LRODKIVITCF
11116-01850	MAVE10LRVITCF
11116-01850	MAVE10SR1/471
11116-01950	MAVE10SR1/4CF
11116-01950	MAVE10SR1/4VITCF
11116-02000	MAVE10SR71
11116-02000	MAVE10SRCF
11116-02120	MAVE12LR1/271
11116-02120	MAVE12LR1/2CF
11116-02200	MAVE12LR1/2VITCF
11116-02200	MAVE12LR71
11116-02500	MAVE12LRCF
11116-02500	MAVE12LRNBR71
11116-02600	MAVE12LRODKICF
11116-02600	MAVE12LRODKIVITCF
11116-02700	MAVE12LRVITCF
11116-02700	MAVE12SR
11116-03300	MAVE12SR1/471
11116-03300	MAVE12SR1/4CF
11116-03380	MAVE12SR1/4NBR71
11116-03380	MAVE12SR1/4VITCF
11116-04000	MAVE12SR71
11116-04000	MAVE12SRCF

944449Q	RED35/08LOMDCF
944450Q	RED35/08LVITCF
944451Q	RED35/08LVITOMDCF
944452Q	RED35/08ZLCF
944453Q	RED35/10L71
944464Q	RED35/10LCF
944475Q	RED35/10LOMD71
944476Q	RED35/10LOMDCF
944481Q	RED35/10LVITCF
944482Q	RED35/10LVITOMDCF
944483Q	RED35/10ZL71
944484Q	RED35/10ZLCF
944489Q	RED35/10ZLVITCF
944490Q	RED35/12L71
944491Q	RED35/12LCF
944492Q	RED35/12LOMD71
944493Q	RED35/12LOMDCF
944494Q	RED35/12LVITCF
944495Q	RED35/12LVITOMDCF
944496Q	RED35/12ZL71
944497Q	RED35/12ZLCF
944498Q	RED35/15L71
944499Q	RED35/15LCF
944500Q	RED35/15LDPR71CF
944501Q	RED35/15LOMD71
944502Q	RED35/15LOMDCF
944503Q	RED35/15LVITCF
944504Q	RED35/15LVITOMDCF
944505Q	RED35/15ZL71
944506Q	RED35/15ZLCF
944507Q	RED35/18L71
944508Q	RED35/18LCF
944509Q	RED35/18LOMD71
944510Q	RED35/18LOMDCF
944511Q	RED35/18LVITCF
944512Q	RED35/18LVITOMDCF
944513Q	RED35/18ZL71
944514Q	RED35/18ZLCF
944515Q	RED35/18ZLVITCF
944516Q	RED35/22L71
944522Q	RED35/22LCF
944551Q	RED35/22LDPR71CF
944561Q	RED35/22LOMD71
944562Q	RED35/22LOMDCF
944563Q	RED35/22LVITCF
944564Q	RED35/22LVITOMDCF
944569Q	RED35/22ZL71
944570Q	RED35/22ZLCF
944571Q	RED35/28L71
944572Q	RED35/28LCF
944573Q	RED35/28LDPR71CF
944574Q	RED35/28LOMD71
944575Q	RED35/28LOMDCF

1111700001-01	MAVE12SRMS	944576Q	RED35/28LVITCF
1111700005-01	MAVE12SRNBR71	944577Q	RED35/28LVITOMDCF
1111700008-01	MAVE12SRVITCF	944578Q	RED35/28ZL71
1111700009-01	MAVE15LR1/271	944579Q	RED35/28ZLCF
1111700021-01	MAVE15LR1/2CF	944580Q	RED35/28ZLVITCF
1111700022-01	MAVE18LR1/2CF	944581Q	RED35/42LOMDCF
1111700023-01	MAVE25SR1/4CF	944582Q	RED35L/16SOMDCF
1111700122-01	MAVEV06LR71	944583Q	RED35L/25SCF
1111700151-01	MAVEV06LRMS	944584Q	RED35L/25SOMD71
1111700201-01	MAVEV06SR71	944585Q	RED35L/25SOMDCF
1111700202-01	MAVEV08LR71	944586Q	RED35L/25SVIOMDCF
1111701001-01	MAVEV08SR71	944587Q	RED35L/25ZSCF
1111701005-01	MAVEV10LR71	944588Q	RED35L/30SCF
1111701008-01	MAVEV10LRCF	944589Q	RED35L/30SOMD71
1111701043-01	MAVEV10LRMS	944590Q	RED35L/30SOMDCF
1111701122-01	MAVEV10SR71	944591Q	RED35L/30ZSCF
1111701201-01	MAVEV12LR1/271	944592Q	RED38/06SCF
1111701202-01	MAVEV12LR71	944593Q	RED38/06SOMDCF
1111702001-01	MAVEV12LRMS	944594Q	RED38/06ZSCF
1111702005-01	MAVEV12SR1/471	944595Q	RED38/08SCF
1111702021-01	MAVEV12SR71	944596Q	RED38/08SOMD71
1111702022-01	MAVMD1/2MA371OR	945TH	RED38/08SOMDCF
1111702023-01	MAVMD1/2MA3CF	9488F	RED38/08ZSCF
1111702122-01	MAVMD1/2MA4	9489D	RED38/10SCF
1111702202-01	MAVMD1/4MA371	9490U	RED38/10SOMD71
1111703005-01	MAVMD1/4MA3CF	9493N	RED38/10SOMDCF
1111703053-01	MAVMD1/4MA4	9495J	RED38/10ZSCF
1111705200-01	MAVMD1/4NPTMA3CF	9497E	RED38/12S71
1111706200-01	MB019000	94C-001-PFD	RED38/12SCF
1111709001-01	MB019013	94C-MKS	RED38/12SOMD71
1111710022-01	MB019014	94KX	RED38/12SOMDCF
1111710023-01	MB019015	94SX	RED38/12SVITOMDCF
1111710051-01	MB019016	94SXAM20SXN	RED38/12ZSCF
1111710053-01	MB019017	9501L	RED38/14SCF
1111712051-01	MB019024	951-N4-H4	RED38/14SOMD71
1111712052-01	MB093000	951-N4-H5	RED38/14SOMDCF
1111712054-01	MB097003	951-N4-H6	RED38/14ZSCF
1111715052-01	MB-1	951-N6-H5	RED38/16S71
1111720053-01	MB10516045192A652	951-N6-H8	RED38/16SCF
1111721054-01	MB10525045193A642	9526M	RED38/16SOMD71
1111722052-01	MB10530025191644	953-N4-H5	RED38/16SOMDCF
1111730052-01	MB10530025A32A64M4	953-N4-H6	RED38/16SVITOMDCF
1111732052-01	MB10530025A33M64M4	953-N6-H6	RED38/16ZS71
1111732053-01	MB10530025C43164E2	955R-53235011-P00-U4A006	RED38/16ZSCF
1111763052-01	MB10530045191642	955R-53270022-P00-U0AD00	RED38/20S71
11118-00340	MB10530045191644	955R-53312521-P00-U4V025	RED38/20SCF
11118-00340	MB10530045191654	955-W6-H6	RED38/20SOMD71
11118-00450	MB10530045192A642	95KSAK13BPN	RED38/20SOMDCF
11118-00450	MB10530045193M64M2	95KSAK13RPN	RED38/20SVITOMDCF
11118-00550	MB10530065191644	95KSAK17BPN	RED38/20ZS71
11118-00550	MB10530065193M644	95KSAK17RPN	RED38/20ZSCF
11118-00560	MB1053006519S3C644	95KSAK21BPN	RED38/25S71
11118-00560	MB10530085191644	95KSAK21RPN	RED38/25SCF

11118-00600	MB10530085193M644	95KSAW13BPN	RED38/25SOMD71
11118-00600	MB10530085193M64M4	95KSAW13EVX	RED38/25SOMDCF
11118-00650	MB1053008519S3C644	95KSIW13BPN	RED38/25SVITCF
11118-00650	MB10530085241644	95KSIW13RPN	RED38/25SVITOMDCF
11118-00700	MB10530085242A642	95KSIW17BPN	RED38/25ZS71
11118-00700	MB10545085192I644	95KSIW17RPN	RED38/25ZSCF
11118-00720	MB10590025191644	95KSIW21BPN	RED38/25ZSVITCF
11118-00720	MB123000	95KSIW21RPN	RED38/30S71
11118-00750	MB14510155243I654	95KSTF06BPN	RED38/30SCF
11118-00750	MB14510285242I644	95KSTF07BPN	RED38/30SOMD71
11118-00850	MB14520225242AW644	95KSTF08BPN	RED38/30SOMDCF
11118-00850	MB1452515524S08642	95KSTF09BPN	RED38/30SVITOMDCF
11118-00880	MB14530085241644	95KSTF09RPN	RED38/30ZS71
11118-00880	MB14530085242AW644	95KSTF10BPN	RED38/30ZSCF
11118-00950	MB1453008524S2IAB644	95KSTF10RPN	RED38/30ZSVITCF
11118-00950	MB14530155241644	95KSTF13BPN	RED38S/28LCF
11118-00965	MB14530155243654	95SSAK13MXN	RED38S/28LOMD71
11118-00965	MB14530225241644	95SSAK17MXN	RED38S/28LOMDCF
11118-01000	MB14530225242I644	95SSIN17MXN	RED38S/28ZLCF
11118-01000	MB14530225243M644	95SSIW13MXN	RED38S/35LCF
11118-01100	MB14530225243MB644	95SSIW17MXN	RED38S/35LOMD71
11118-01100	MB14530225283I64M4	95SSTF06MXN	RED38S/35LOMDCF
11118-01120	MB14530225283MB644	95SSTF07EXXS	RED42/06LOMDCF
11118-01120	MB14530285243MB644	95SSTF09MXN	RED42/06LVITOMDCF
11118-01202	MB1453028524S164H4	95SSTF10MXN	RED42/08LOMDCF
11118-01202	MB14530285283MB644	9602-452-00H	RED42/08LVITOMDCF
11118-01500	MB14545155241644	9645R	RED42/08ZLCF
11118-01500	MB1454515524S2IAB644	9664M	RED42/10L71
11118-01600	MB14545225243MB644	9690L	RED42/10LCF
11118-01600	MB153000	9691J	RED42/10LOMD71
11118-01610	MB183000	96ALBOX	RED42/10LOMDCF
11118-01610	MB20510505383I654	96COMM	RED42/10LVITCF
11118-01800	MB20510505A62A644	96COMM_UP	RED42/10LVITOMDCF
11118-01800	MB20520505382A644	96JPRNTC3M	RED42/10ZLCF
11118-01810	MB20520705382A644	96JVALI02	RED42/12L71
11118-01810	MB20520705A62A644	96KSAK13BPN	RED42/12LCF
11118-01825	MB2053028538S3I654	96KSAK17BPN	RED42/12LDPR71CF
11118-01825	MB205305053831654	96KSAK21BPN	RED42/12LOMD71
11118-01850	MB20530505383165ML4	96KSAW13BPN	RED42/12LOMDCF
11118-01850	MB20530505422I644	96KSAW17RVX	RED42/12LVITCF
11118-01960	MB205307053831654	96KSIW13BPN	RED42/12LVITOMDCF
11118-01960	MB20530705383165ML4	96KSIW13RVX	RED42/12ZL71
11118-02000	MB205309053831654	96KSIW17BPN	RED42/12ZLCF
11118-02000	MB20530905383I65M4	96KSIW17BPXS	RED42/15L71
11118-02200	MB2053090538S3I654	96KSIW17RVX	RED42/15LCF
11118-02200	MB233000	96KSTF06BPN	RED42/15LDPR71CF
11118-02300	MB233002	96KSTF07BPN	RED42/15LOMD71
11118-02300	MB4 HANDLE-BLUE	96KSTF08BPN	RED42/15LOMDCF
11118-02400	MB4-HANDLE-GREEN	96KSTF09BPN	RED42/15LVITCF
11118-02400	MB4-HANDLE-RED	96KSTF09BPX	RED42/15LVITOMDCF
11118-02610	MB4-HANDLE-YELLOW	96KSTF10BENS	RED42/15ZLCF
11118-02610	MB56500,65111642	96KSTF10BPN	RED42/18L71
11118-02900	MB6-HANDLE-BLUE	96KSTF13BPN	RED42/18LCF

11118-02900	MB6-HANDLE-GREEN	96MCC2212	RED42/18LOMD71
11118-03740	MB6-HANDLE-RED	96MCIIT01	RED42/18LOMDCF
11118-03740	MB6-HANDLE-YELLOW	96MCKC03	RED42/18LVITCF
11118-04000	MB7020015111642	96NAPP01	RED42/18LVITOMDCF
11118-04000	MB7020015112I642	96PRNSCR	RED42/18ZL71
11121-00300	MB7020025141642	96SAKSILII	RED42/18ZLCF
11121-00300	MB7020025142I642	96SSAK13MXN	RED42/22L71
11121-00500	MB702002514S3M642	96SSAK17MXN	RED42/22LCF
11121-00500	MB7037025142A644	96SSAW17RXX	RED42/22LOMD71
11121-02320	MB703702514S08644	96SSIW13MXN	RED42/22LOMDCF
11121-02320	MB703702514S1644	96SSIW17MXN	RED42/22LVITCF
11122-00270	MB70372,55141644	96SSIW17RXX	RED42/22LVITOMDCF
11122-00270	MB70380,55111642	96SSTF06MXN	RED42/22ZL71
11122-00476	MB7038015111642	96SSTF08MXN	RED42/22ZLCF
11122-00476	MB703802514S08642	96SSTF09MXN	RED42/22ZLVITCF
11122-00500	MBA10530045191654	96SSTF10EXX	RED42/28L71
11122-00500	MBA10530045192A64	96SSTF10MXN	RED42/28LCF
11122-00550	MBA10530045192A642	96SSTF13MXN	RED42/28LOMD71
11122-00550	MBA10530045192I644	9739-11	RED42/28LOMDCF
11122-00590	MBA10530085191644	9739-11	RED42/28LVITCF
11122-00590	MBA14520225242I64M4	974094-G 3/4	RED42/28LVITOMDCF
11122-00700	MBA14530085240864M4	9750-11	RED42/28ZL71
11122-00700	MBA14530085241644	9750-11	RED42/28ZLCF
11122-00750	MBA14530155240864M4	975867-10	RED42/28ZLSSACF
11122-00750	MBA14530155241644	975867-12	RED42/28ZLVITCF
11122-00850	MBA14530155243654	975867-14	RED42/35L71
11122-00850	MBA14530225241644	975867-16	RED42/35LCF
11122-00900	MBA14530225283MB644	975867-20	RED42/35LDPR71CF
11122-00900	MBA14530285243MB644	975867-24	RED42/35LOMD71
11122-01050	MBA702001514S1642	975867-32	RED42/35LOMDCF
11122-01050	MBA70371,55111644	975867-4	RED42/35LVITCF
11122-01220	MBA70380251108642	975867-6	RED42/35LVITOMDCF
11122-01220	MBA70381,55142A652	975867-8	RED42/35ZL71
11122-01350	MBAV10530085191654	975-M30X1000-8.8	RED42/35ZLCF
11122-01350	MBB14530085241654	976521-10	RED42/35ZLVITSSACF
11122-01400	MBB14530285241654	976521-12	RED42L/16SOMDCF
11122-01400	MBB20530285383165ML4	976521-14	RED42L/20SCF
11122-01650	MBB20530505383I644	976521-16	RED42L/20SOMDCF
11122-01650	MBBV2052090542S3I654	976521-20	RED42L/25SCF
11122-01950	MBD005DC621A	976521-24	RED42L/25SOMDCF
11122-01950	MBD005DC621A	976521-32	RED42L/30SCF
11122-02000	MBSV10530085191644	976521-4	RED42L/30SOMD71
11122-02000	MBSV10530085241644	976521-6	RED42L/30SOMDCF
11122-02130	MBSV14520155242IAD644	976521-8	RED42L/30SVITCF
11122-02130	MBSV1452028428S1644	9792D-12	RED42L/30ZSCF
11122-02250	MBSV14545155241644	9792D-12	RED42L/38SCF
11122-02250	MBSV14545155243I644	9793D-12	RED42L/38SOMD71
11123-00280	MBSV265201505483MBS644	9793D-12	RED42L/38SOMDCF
11123-00280	MBV10530025193164M4	97MCTNAP03	RED42L/38ZS71
11123-00375	MBV10530045191654	9-8 FBMP7-SS	RED42L/38ZSCF
11123-00375	MBV14516155243M64M2	981-500043	REDL18/10LOFF71
11123-00400	MBV145300852431644	981-500047	REK05/04
11123-00400	MBV1453008524S31644	98516/5040	REK05/05

11123-00485	MBV14530225243M644	98516/5040	REK05/07
11123-00485	MBVG4-1/2	98516/7013	REK06/04
11123-00500	MBVG4-1/4	98516/7013	REK06/05
11123-00500	MBVG4-3/8	9892Z	REK06/07
11123-00700	MBX10530085193554	989FIL	REK06/12
11123-00700	MBZ 10-1/4-10-SS	989FIL	REK32/02
11123-00800	MBZ 12-1/2-12-SS	9-9 EBMP7-SS	REK32/03
11123-00800	MBZ 12-1/4-12-SS	9-9 HBMP7-SS	REK32/04
11123-00900	MBZ 12-3/8-12-SS	9-9 WBMP7-SS	REK32/05
11123-00900	MBZ 6-1/4-6-SS	990-000382-001	REK32/06
11123-01000	MBZ 6-1/8-6-SS	990-000382-002	REK32/07
11123-01000	MC.10.1.SS	990-000401-002	REK32/08
11123-01100	MC.10.16.SS	990-000401-003	REK32/09
11123-01100	MC.10.2.SS	990-000401-004	REK32/11
11123-01350	MC.16.1.SS	990-000401-005	REK32/12
11123-01350	MC.16.12.SS	990-000427-001	REK32/14
11123-01710	MC.16.2.SS	990-000427-002	REK32/20
11123-01710	MC.32.1.SS	990-000432-001	REK32/21
11123-01750	MC.N.10.SS	990-000434-011	REK33/03
11123-01750	MC.N.16.SS	990-000500-001	REK33/04
11123-01850	MC.N.32.SS	990-001087-001	REK33/05
11123-01850	MC.S.10.SS	990-001291-001	REK33/06
11123-02110	MC1,5/4-ST-3,5	990-004771-002	REK33/07
11123-02110	MC1.5/6-ST-3.5	990-004772-001	REK33/08
11123-02210	MC1.5/7-ST-3.5	990-004772-002	REK33/09
11123-02210	MC101	990-004774-001	REK33/10
11123-02420	MC1016	990-005001-015	REK33/12
11123-02420	MC102	990-005001-050	REK36/20
11124-00320	MC10ML-B	990-005001-100	REK37/20
11124-00320	MC10ML-B	990-005003-005	REK40/03
11124-00330	MC13SA6222	990-005003-015	REK41/02
11124-00330	MC13SR0001	990-005003-050	REK41/03
11124-00375	MC13SR0006	990-005003-100	REK41/04
11124-00375	MC13SR0009	990-005005-002	REK41/05
11124-00450	MC13SR0011	990-005010-100	REK41/06
11124-00450	MC13SR0107	990-005011-015	REK41/07
11124-00550	MC13SR0126	990-005011-050	REK41/08
11124-00550	MC13SR0150	990-005011-100	REK41/09
11124-00600	MC13SR0261	990-005013-030	REK41/10
11124-00600	MC13SR0501	990-005020-002	REK41/11
11124-00650	MC13SR0502	990-005021-015	REK41/12
11124-00650	MC13SR0526	990-005021-050	REK41/13
11124-00750	MC150M	990-005021-100	REK41/14
11124-00750	MC150M	990-005023-015	REK42/01
11124-00760	MC150MH	990-005023-050	REK42/02
11124-00760	MC150MH	990-005023-100	REK42/03
11124-01600	MC161	990-005101-002	REK42/04
11124-01600	MC1612	990-005101-015	REK42/05
11124-01622	MC162	990-005101-100	REK42/06
11124-01622	MC17BR0021	990-005103-002	REK42/07
11124-01726	MC17HA6928	990-005103-005	REK42/08
11124-01726	MC17HR0021	990-005103-015	REK42/09
11124-02100	MC17HR0025	990-005103-050	REK42/10

11124-02100	MC17HR0026	990-005103-100	REK42/11
11124-02200	MC17HR0027	990-005123-015	REK42/12
11124-02200	MC17HR0036	990-005123-050	REK42/14
11124-03500	MC17HR0204	990-005123-100	REK42/21
11124-03500	MC17HR0524	990-005201-002	REK43/02
11124-03560	MC17NR0029	990-005203-005	REK47/20
11124-03560	MC19PA6854	990-005211-007	REP.CHG.LCM1
11124-03860	MC19PA7036	990-005303-001	REPAIR-13309 W
11124-03860	MC19PA8285	990-005303-005	REPAIR-13314
11125-00590	MC19PA8424	990-005303-015	REPAIR-13331
11125-00590	MC19PR0021	990-005303-100	REPAIR-13334
11125-01200	MC19PR0025	990-005312-001	REPAIR-13337
11125-01200	MC19PR0026	990-005313-007	REPAIR-13339
11125-01400	MC19PR0027	990-005313-015	REPAIR-13343
11125-01400	MC19PR0035	990-005313-100	REPAIR-13362
11125-02050	MC19PR0036	990-005320-A11	REPAIR-13381
11125-02050	MC19PR0204	990-005403-015	REPAIR-13386
11125-02350	MC19PR0513	990-005403-100	REPAIR-13387
11125-02350	MC19PR0520	990-005705-001	REPAIR-13388
11125-03200	MC19PR0523	990-005706-001	REPAIR-13390
11125-03200	MC19PR0527	990-005706-002	REPAIR-13391
11125-03210	MC19PR0552	990-005706-003	REPAIR-13400 WK
11125-03210	MC19SA8497	990-005708-007	REPAIR-13412
11126-01000	MC19SR0021	990-005709-050	REPAIR-13419
11126-01000	MC19SR0022	990-005711-001	REPAIR-13423
11126-01200	MC19SR0025	990-005712-001	REPAIR-13425
11126-01200	MC19SR0026	990-005714-011	REPAIR-13427
11126-01400	MC19SR0027	990-005721-001	REPAIR-13437
11126-01400	MC19SR0036	990-005722-001	REPAIR-13438
11126-01750	MC19SR0510	990-005731-005	REPAIR-13445
11126-01750	MC19SR0522	990-005731-015	REPAIR-13455
11128-00820	MC1S09HS12L24BLG	990-005731-030	REPAIR-13465
11128-00820	MC1S09HS12L24BLG	990-005803-015	REPAIR-13475
11131-01300	MC2200	990-005803-050	REPAIR-13484
11131-01300	MC225M	990-005803-100	REPAIR-13485
11131-01510	MC225M	990-006023-001	REPAIR-13489
11131-01510	MC225MH	990-006023-002	REPAIR-13493
11132-00100	MC225MH	990-006028-006	REPAIR-13495 W
11132-00100	MC22S10HS42L4BLG	990-006028-008	REPAIR-13496
11132-00165	MC22S10HS42L4BLG	990-006028-030	REPAIR-13505
11132-00165	MC22S10HSVGL4BLG	990-006028-032	REPAIR-13516
11132-00400	MC22S10HSVGL4BLG	990-006029-001	REPAIR-13532
11132-00400	MC23ASA8488	990-006029-002	REPAIR-13533
11132-00500	MC23ASR0001	990-006029-006	REPAIR-13538
11132-00500	MC23ASR0005	990-006029-024	REPAIR-13539
11132-00630	MC23ASR0006	990-006029-028	REPAIR-13544 W
11132-00630	MC23ASR0204	991-000006-001	REPAIR-13546
11132-00750	MC23SA6485	991-000006-002	REPAIR-13548
11132-00750	MC23SA6675	991-000006-003	REPAIR-13556
11132-00920	MC23SA8121	991-000006-004	REPAIR-13558
11132-00920	MC23SA8338	991-000006-005	REPAIR-13559
11132-01000	MC23SR0005	991-000006-006	REPAIR-13570 W
11132-01000	MC23SR0006	991-000006-007	REPAIR-13578

11132-01500	MC23SR0007	991-000006-008	REPAIR-13591
11132-01500	MC23SR0016	991-000006-009	REPAIR-13594
11132-01800	MC23SR0214	991-000006-015	REPAIR-13595
11132-01800	MC24PA4915	991-000006-017	REPAIR-13607
11132-01805	MC24PA8443	991-000007-001	REPAIR-13617
11132-01805	MC24PR0001	991-000007-007	REPAIR-13618 W
11132-03700	MC24PR0006	991-000007-008	REPAIR-13636
11132-03700	MC24PR0007	991-000008-001	REPAIR-13643
11133-00207	MC24PR0011	991-000008-002	REPAIR-13644
11133-00207	MC24PR0016	991-000008-003	REPAIR-13647
11133-00580	MC24PR0204	991-000008-004	REPAIR-13662
11133-00580	MC24PR0506	991-000008-005	REPAIR-13664 W
11133-00600	MC24PR0515	991-000008-006	REPAIR-13674
11133-00600	MC24PR0552	991-000008-008	REPAIR-13677
11133-00700	MC24PR0553	991-000008-009	REPAIR-13681
11133-00700	MC25M	991-000008-012	REPAIR-13693 W
11133-01100	MC25M	991-000008-063	REPAIR-13697
11133-01100	MC25MH	991-000008-067	REPAIR-13708
11133-01900	MC25MH	991-000008-079	REPAIR-13709
11133-01900	MC27A8218	991-000008-081	REPAIR-13728
11133-02400	MC27A8510	991-000008-082	REPAIR-13730
11133-02400	MC27R0001	991-000009-001	REPAIR-13741
11134-00300	MC27R0006	991-000009-003	REPAIR-13745
11134-00300	MC27R0011	991-000009-004	REPAIR-13748
11134-00600	MC27R0015	991-000009-073	REPAIR-13762
11134-00600	MC27R0016	991-000009-081	REPAIR-13771
11134-00700	MC27R0017	991-000010-001	REPAIR-13772
11134-00700	MC27R0214	991-000010-003	REPAIR-13789
11134-00760	MC27R0502	991-000010-004	REPAIR-13806
11134-00760	MC27R0513	991-000010-060	REPAIR-13810
11134-00765	MC2-C201G	991-000010-071	REPAIR-13828
11134-00765	MC2-C201G	991-000011-001	REPAIR-13833
11134-00800	MC2-E	991-000011-002	REPAIR-13834
11134-00800	MC2-E	991-000011-003	REPAIR-13840
11134-01035	MC2-F	991-000011-004	REPAIR-13856
11134-01035	MC2-F	991-000011-005	REPAIR-13860 W
11134-01200	MC2-M02G	991-000011-006	REPAIR-13862
11134-01200	MC2-M02G	991-000011-007	REPAIR-13863 W
11134-01600	MC2-M03G	991-000011-010	REPAIR-13876
11134-01600	MC2-M03G	991-000011-013	REPAIR-13879
11134-01750	MC2-M05G	991-000011-015	REPAIR-13894
11134-01750	MC2-M05G	991-000011-017	REPAIR-13896
11134-01800	MC2-M06G	991-000011-018	REPAIR-13899
11134-01800	MC2-M06G	991-000012-001	RES10526
11134-02000	MC2-M07G	991-000012-002	RF20-16CFX
11134-02000	MC2-M07G	991-000012-003	RF24-16CFX
11134-02352	MC2-M08G	991-000013-001	RF24-20CFX
11134-02352	MC2-M08G	991-000013-002	RF32-20CFX
11134-02392	MC2S05HSZL24B5G	991-000013-003	RF32-24CFX
11134-02392	MC2S05HSZL24B5G	991-000013-004	RF40-24CFX
11134-02675	MC2S07HSZL24B5G	991-000013-005	RF40-32CFX
11134-02675	MC2S07LSZL24B5G	991-000013-007	RF48-32CFX
11134-02852	MC2S07LSZL24B5G	991-000013-009	RF48-40CFX

11134-02852	MC321	991-000013-011	RF64-48CFX
11135-00300	MC3216	991-000013-012	RFE2
11135-00300	MC322	991-000013-061	RFF15C
11135-00380	MC3325M-1	991-000013-063	RFF1C
11135-00380	MC3325M-1	991-000013-068	RFF3C
11135-00500	MC3325M-3	991-000014-001	RFF8C
11135-00500	MC3325M-3	991-000014-002	RG02MA0101
11135-00520	MC3350M-1	991-000014-003	RG02MA0101
11135-00520	MC3350M-1	991-000014-061	RG02MA0105
11135-00600	MC4525-2	991-000015-001	RG02MA0105
11135-00600	MC4525-2	991-000015-002	RG05MMB0281
11135-00800	MC4525M-1	991-000015-003	RG05MMB0285
11135-00800	MC4525M-1	991-000015-074	RG05MMB0361
11135-01085	MC4550M-3	991-000015-078	RG05MMB0362
11135-01085	MC4550M-3	991-000016-001	RG06MMB0361
11135-01100	MC64150M-2	991-000016-002	RG06MMB0451
11135-01100	MC64150M-2	991-000016-003	RG08MMB0451
11135-01200	MC72S20HSVGC4ALG	991-000016-017	RG08MMB0561
11135-01200	MC72S20HSVGC4ALG	991-000018-001	RG08MMB0562
11135-01390	MC72S20HSZSC4BPG	991-000018-003	RG08MMB0565
11135-01390	MC72S20HSZSC4BPG	991-000018-004	RG0MP00251
11135-01400	MC75M-3	991-000018-008	RG10MMB0561
11135-01400	MC75M-3	991-000018-011	RG12MMB0701
11135-01500	MC7RFBASE	991-000018-067	RG12MMB0901
11135-01500	MC7RLCOVER	991-000018-068	RG16MMB0901
11135-01700	MC7RMBASE	991-000018-071	RG1HMN0362
11135-01700	MC7RSACOVER	991-000019-001	RG2AHL0505
11135-02700	MCA05HST6T6G1	991-000019-004	RG2AHL051
11135-02700	MCA05HST6T6G1	991-000019-008	RG2AHL052
11136-00440	MCA05HST6T6T6	991-000019-011	RG2AHL055
11136-00440	MCA05HST6T6T6	991-000019-081	RG2AHL061
11136-00700	MCA05LST6T6G1	991-000020-001	RG2AHL062
11136-00700	MCA05LST6T6G1	991-000020-003	RG2AHL065
11136-00900	MCA05LST6T6T6	991-000020-008	RG2AHL065GGG40
11136-00900	MCA05LST6T6T6	991-000020-011	RG2AHL101
11136-01000	MCA07HST6T6G1	991-000036-001	RG2AHL102
11136-01000	MCA07HST6T6G1	991-000036-004	RG2AHL105
11136-01100	MCA07HST6T6T6	991-000036-007	RG2AHL106
11136-01100	MCA07HST6T6T6	991-000038-001	RG2AHL131
11136-01260	MCA07LST6T6G1	991-000038-002	RG2AHL132
11136-01260	MCA07LST6T6G1	991-000038-004	RG2AHL135
11136-01430	MCA07LST6T6T6	991-000039-001	RG2AHL135PU
11136-01430	MCA07LST6T6T6	991-000040-001	RG2AHL135-RAST
11136-01600	MCA10HST6T6G2	991-000041-001	RG2AHL171
11136-01600	MCA10HST6T6G2	991-000041-002	RG2AHL172
11136-02100	MCA10HST6T6T8	991-000041-005	RG2AHL175
11136-02100	MCA10HST6T6T8	991-000041-007	RG2AHL201
11136-03150	MCA10LST6T6G2	991-000043-001	RG2AHL202
11136-03150	MCA10LST6T6G2	991-000043-002	RG2AHL205
11138-00300	MCA10LST6T6T8	991-000043-007	RG2AHL205PU
11138-00300	MCA10LST6T6T8	991-000043-011	RG2AHL251
11138-00340	MCA13HST6T6G2	991-000043-071	RG2AHL252
11138-00340	MCA13HST6T6G2	991-000044-001	RG2AHL252PU

11138-01450	MCA13HST6T6T8	991-000045-001	RG2AHL255
11138-01450	MCA13HST6T6T8	991-000046-003	RG2AHL255PU
11138-01500	MCB10MO	991-000046-004	RG2AHL301
11138-01500	MCB16MO	991-000048-001	RG2AHL302
11138-02200	MCE2200	991-000049-001	RG2AHL305
11138-02200	MCG1010	991-000206-001	RG2AHL351
11138-03600	MCG1012	991-000206-002	RG2AHL352
11138-03600	MCG104	991-000206-003	RG2AHL355
11141-00380	MCG105	991-000206-004	RG2AHL401
11141-00380	MCG106	991-000206-005	RG2AHL402
11142-00500	MCG108	991-000206-006	RG2AHL405
11142-00500	MCG1610	991-000206-007	RG2AHL501
11143-02250	MCG1612	991-000206-009	RG2AHL502
11143-02250	MCG1614	991-000206-011	RG2AHL505
11144-00200	MCG1616	991-000206-013	RG2AHL551
11144-00200	MCG1618	991-000207-001	RG2AHL555
11144-00550	MCG164	991-000207-005	RG2AN00061
11144-00550	MCG165	991-000207-039	RG2AN00101
11144-01150	MCG166	991-000208-001	RG2AN00131
11144-01150	MCG168	991-000208-004	RG2AN00135
11145-00520	MCG3210	991-000208-005	RG2AN00171
11145-00520	MCG3212	991-000208-007	RG2AN00201
11145-00654	MCG3214	991-000208-008	RG2AN00205
11145-00654	MCG3216	991-000208-014	RG2AN00251
11145-01085	MCG3218	991-000208-022	RG2AN00401
11145-01085	MCG3220	991-000208-039	RG2AN135-RAST
11146-01300	MCG3224	991-000208-040	RG2HLF0061
11146-01300	MCG3226	991-000208-047	RG2HLF0101
11148-00550	MCG3232	991-000209-001	RG2HLF0131
11148-00550	MCG326	991-000209-008	RG2HLF0171
1115.12	MCG328	991-000210-001	RG2HLF0175
1115.1C	MCH-12	991-000210-004	RG2HLF0201
1115.2	MCH-24	991-000211-001	RG2HLF0251
11152-00800	MCH-4	991-000211-002	RG2HLF0301
11152-00800	MCM202022	991-000211-003	RG2HLF0351
11152-01608	MCM202022HS	991-000211-004	RG2HLF0401
11152-01608	MCM202062	991-000211-006	RG2HLF251PU
11152-05800	MCN10	991-000211-007	RG2HLTS051
11152-05800	MCN16	991-000211-010	RG2HLTS061
11153-01050	MCN32	991-000211-013	RG2HLTS101
11153-01050	MCS10	991-000211-014	RG2HLTS131
11153-01270	MCS32	991-000212-001	RG2HLTS131W5
11153-01270	MCS6A12PDL	991-000212-002	RG2HLTS137
11154-03298	MCS6A12PDL	991-000212-008	RG2HLTS171
11154-03298	MCSB10	991-000212-035	RG2HLTS201
11164FIL	MCSB32	991-000213-001	RG2HLTS251
11164FIL	MCTH4	991-000213-002	RG2HLTS301
1116FIL	MCTH4-RS	991-000213-003	RG2HLTS351
1116FIL	MCTH5	991-000213-004	RG2HLTS401
11186-01500	MCTH5-RS	991-000213-005	RG2HLTS501
11186-01500	MCTH6	991-000213-007	RG2HLTS551
111A-036-AT-0	MCTH6-RS	991-000213-008	RG2HM0121
111A-054-AT-0	MCTH910	991-000213-035	RG2HM0125

111A-054-BS-0	MCTH920	991-000213-039	RG2HM0141
111A-129-AM-E	MCTH940	991-000214-001	RG2HM0145
111A-129-AS-0	MCTH940-RS	991-000214-004	RG2HM0181
111A-129-AS-1	MCTH960	991-000214-035	RG2HM0182
111A-129-AT-0	MCTM4	991-000214-039	RG2HM0185
111A-129-AT-1	MCTM4-RS	991-000215-001	RG2HM0221
1120010-115M8-09503-01940	MCTM6	991-000215-002	RG2HM0222
1120010-115M8-09503-01940	MCTM6-RS	991-000215-007	RG2HM0225
1120010-115M8-09504-01940	MCTM910	991-000215-035	RG2HM0281
1120010-115M8-09504-01940	MCTM910-RS	991-000215-039	RG2HM0282
1120010-130M8-09503-01940	MCTM920	991-000215-047	RG2HM0285
1120010-130M8-09503-01940	MCTM920-RS	991-000216-001	RG2HM0361
1120010-16510-13004-02450	MCWP10	991-000216-002	RG2HM0361W5
1120010-16510-13004-02450	MCWP32	991-000216-007	RG2HM0362
1120025-16510-13004-02450	MD0.8/10-20	991-000216-009	RG2HM0365
1120025-16510-13004-02450	MD17HSR0005	991-000217-001	RG2HM0451
1120050-115M8-09504-01940	MD17HSR0503	991-000217-007	RG2HM0451W5
1120050-115M8-09504-01940	MD5790R10RCR01	991-000217-040	RG2HM0452
11202FIL	MD5790R10RCR02	991-000218-001	RG2HM0455
11202FIL	MDF12X1.571X	991-000219-001	RG2HM0561
11203FIL	MDF12X1.5BLKOELXBP	991-000219-002	RG2HM0562
11203FIL	MDF12X1.5CFX	991-000219-040	RG2HM0565
1120-7638	MDF12X1.5CFXBP	991-000220-001	RG2HM0701
11207FIL	MDF12X1.5OSCFX	991-000236-001	RG2HM0702
11207FIL	MDF14X1.571X	991-000236-002	RG2HM0705
11209FIL	MDF14X1.5CFX	991-000238-001	RG2HM0901
11209FIL	MDF14X1.5CFXBP	991-000238-008	RG2HM0902
11210FIL	MDF14X1.5OSTCFXBP	991-000239-001	RG2HM0905
11210FIL	MDF16X1.571X	991-000241-001	RG2HM1101
11212FIL	MDF16X1.5CFX	991-000243-001	RG2HM1102
11212FIL	MDF16X1.5CFXBP	991-000243-003	RG2HM1401
11213FIL	MDF16X1.5OSTBLKOX	991-000243-007	RG2HMF0121
11213FIL	MDF16X1.5OSTCFXBP	991-000244-001	RG2HMF0141
11218FIL	MDF18X1.571X	991-000306-001	RG2HMF0181
11218FIL	MDF18X1.5BLKOELXBP	991-000306-003	RG2HMF0221
11219FIL	MDF18X1.5CFX	991-000306-004	RG2HMF0281
11219FIL	MDF18X1.5CFXBP	991-000306-005	RG2HMF0281W5
1121FIL	MDF18X1.5OSTCFXBP	991-000306-007	RG2HMF0361
1121FIL	MDF20X1.571X	991-000306-008	RG2HMF0451
11220FIL	MDF20X1.5CFX	991-000306-012	RG2HMF0455
11220FIL	MDF20X1.5CFXBP	991-000306-016	RG2HMF0561
112-26-34	MDF20X1.5OSTCFXBP	991-000306-017	RG2HMF0701
11237FIL	MDF22X1.571X	991-000307-001	RG2HMF0705
11237FIL	MDF22X1.5BLKOELXBP	991-000307-004	RG2HMF0901
11246FIL	MDF22X1.5CFX	991-000307-007	RG2HMF1101
11246FIL	MDF22X1.5CFXBP	991-000307-008	RG2HTSU101
11247FIL	MDF22X1.5OSTCFXBP	991-000308-001	RG2HTSU131
11247FIL	MDF24X1.571X	991-000308-004	RG2HTSU171
11249FIL	MDF24X1.5CFX	991-000308-008	RG2HTSU201
11249FIL	MDF24X1.5CFXBP	991-000308-009	RG2HTSU251
112-5-10	MDF24X1.5OSTCFXBP	991-000308-012	RG3-19855
11259FIL	MDF26X1.571X	991-000308-037	RG3-8900-06
11259FIL	MDF26X1.5BLKOELXBP	991-000309-001	RG3-8901-06

11279FIL	MDF26X1.5CFX	991-000310-001	RG3-8902-06
11279FIL	MDF26X1.5CFXBP	991-000311-001	RG3-8903-06
112-8-13	MDF26X1.5OSTCFXBP	991-000311-004	RG3-8904-06
11285FIL	MDF30X271X	991-000311-007	RG3H000701
11285FIL	MDF30X2CFX	991-000311-009	RG3H000801
11293FIL	MDF30X2CFXBP	991-000311-012	RG902H701
11293FIL	MDF30X2OSTCFXBP	991-000311-014	RG902HTS501
112A-036-AT-0	MDF36X271X	991-000311-016	RG922H851
112A-0439	MDF36X2CFX	991-000311-017	RG922HTS551
112A-054-AS-0	MDF36X2CFXBP	991-000311-018	RGD2HLTS061
112A-054-AT-0	MDF36X2OSTCFXBP	991-000312-001	RGD2HLTS101
112A-054-AT-1	MDF36X2SW4171X	991-000313-001	RGD2HLTS401
112A-071-AM-0	MDF36X2SW41CFX	991-000313-002	RGDHLTS061
112A-071-AT-0	MDF36X2SW41CFXBP	991-000313-003	RGDHLTS101
112A-071-AT-0-S	MDF36X2SW41OSCFXBP	991-000313-004	RGDHLTS131
112A-088-AM-0	MDF42X271X	991-000313-007	RGDHLTS171
112A-088-AP-0-S	MDF42X2CFX	991-000313-009	RGDHLTS201
112A-088-AT-0	MDF42X2CFXBP	991-000313-012	RGDHLTS251
112A-088-AT-1	MDF42X2OSTCFXBP	991-000313-071	RGDHLTS301
112A-106-AM-1	MDF45X271X	991-000313-078	RGDHLTS351
112A-106-AT-0	MDF45X2CFX	991-000313-080	RGDHLTS401
112A-106-AT-0-F	MDF45X2CFXBP	991-000314-001	RGDHLTS501
112A-106-AT-0-S	MDF45X2OST71X	991-000314-004	RGDHLTS551
112A-106-AT-1-E-01	MDF45X2OSTCFXBP	991-000315-001	RGE2AHL102
112A-106-AT-E	MDF52X271X	991-000315-003	RGGDHL105
112A-129-AT-0	MDF52X2CFX	991-000315-004	RGGDHL132
112A-129-AT-0-S	MDF52X2CFXBP	991-000315-075	RGGDHL135
112A-164-AM-0	MDF52X2LG30CFX	991-000315-079	RGGDHL172
112A-164-AT-0	MDF52X2LG30CFXBP	991-000316-001	RGGDHL175
112A-164-AT-0-S	MDF52X2LG30OSCFXBP	991-000316-002	RGGDHL202
112A-164-AT-E	MDF52X2OSCFX	991-000316-003	RGGDHL205
112A-189-AT-0-S	MD-M51-2FB	991-000316-007	RGGDHL255
112A-241-AT-0-S-86	MD-M51-2FB-K0	991-000316-008	RGGDHL302
112A-241-AT-0-S-F	MD-M51-2FB-K2	991-000316-009	RGGDHL305
112A-7155	MD-M51-2FB-K3	991-000316-017	RGGDHL352
11307FIL	MD-M51-2FB-K5	991-000317-001	RGGDHL355
11307FIL	MD-M51-2FB-K6	991-000317-002	RGGDHL405
11317FIL	MD-M51-2FB-K8	991-000317-008	RGGDHM0121
11317FIL	MD-M51-2MB	991-000318-001	RGGDHM0141
11322FIL	MD-M51-2MB-K0	991-000318-004	RGGDHM0181
11322FIL	MD-M51-2MB-K2	991-000318-009	RGGDHM0181W5
11324FIL	MD-M51-2MB-K3	991-000319-001	RGGDHM0185
11324FIL	MD-M51-2MB-K5	991-000319-068	RGGDHM0221
1132FIL	MD-M51-2MB-K6	991-000319-081	RGGDHM0225
1132FIL	MD-M51-2MB-K8	991-000320-001	RGGDHM0281
11349FIL	MD-M51-4FB	991-000320-002	RGGDHM0285
11349FIL	MD-M51-4FB-K0	991-000336-001	RGGDHM0361
11350FIL	MD-M51-4FB-K2	991-000336-005	RGGDHM0365
11350FIL	MD-M51-4FB-K3	991-000336-015	RGGDHM0451
11351FIL	MD-M51-4FB-K5	991-000338-001	RGGDHM0455
11351FIL	MD-M51-4FB-K6	991-000338-003	RGGDHM0561
11353FIL	MD-M51-4FB-K8	991-000338-009	RGGDHM0701
11353FIL	MD-M51-4MB	991-000339-001	RGGDHM0901

11355-8-8	MD-M51-4MB-K0	991-000340-004	RGGDHM1101
11367FIL	MD-M51-4MB-K2	991-000341-001	RGGDHM1401
11367FIL	MD-M51-4MB-K3	991-000341-017	RGHSM157-28
11371FIL	MD-M51-4MB-K5	991-000343-001	RGHSM500-539
11371FIL	MD-M51-4MB-K6	991-000343-003	RGJDHM0141
11374FIL	MD-M51-4MB-K8	991-000343-071	RGJDHM0181
11374FIL	MD-M51-HM4HB	991-000346-005	RGJDHM0185
11377FIL	MD-M51-HM4HB-K0	991-000348-001	RGJDHM0221
11377FIL	MD-M51-HM4HB-K2	991-000506-001	RGJDHM0225
11378FIL	MD-M51-HM4HB-K3	991-000506-002	RGJDHM0281
11378FIL	MD-M51-HM4HB-K5	991-000506-003	RGJDHM0281-040W5
11379FIL	MD-M51-HM4HB-K6	991-000506-004	RGJDHM0285
11379FIL	MD-M51-HM4HB-K8	991-000506-005	RGJDHM0361
11380FIL	MD-M51-HM6CSP	991-000506-007	RGJDHM0451
11380FIL	MD-M51-HM6CSP-K0	991-000506-008	RGJDHM0561
11382FIL	MD-M51-HM6CSP-K2	991-000506-011	RGJDHM0701
11382FIL	MD-M51-HM6CSP-K3	991-000506-012	RGJDHM0901
11384FIL	MD-M51-HM6CSP-K5	991-000507-001	RGJDHM0905
11384FIL	MD-M51-HM6CSP-K6	991-000507-003	RGL-2-19445
11385FIL	MD-M51-HM6CSP-K8	991-000507-004	RGL2AHL105GGG40
11385FIL	MD-M51-HM6HB	991-000507-005	RGL2AHL305FORD
11386FIL	MD-M51-HM6HB-K0	991-000507-007	RGL2HLF0101
11386FIL	MD-M51-HM6HB-K2	991-000507-008	RGL2HLF0131
11391FIL	MD-M51-HM6HB-K3	991-000507-032	RGL2HLF0171
11391FIL	MD-M51-HM6HB-K5	991-000508-001	RGL2HMF0141J
11393FIL	MD-M51-HM6HB-K6	991-000508-002	RGL2HMF0221
11393FIL	MD-M51-HM6HB-K8	991-000508-004	RGL2HMF0281
11399FIL	MD-M51-HM8CSP	991-000508-005	RGL2HMF0281J
11399FIL	MD-M51-HM8CSP-K0	991-000508-031	RGL2HMF0361
113A-088-AS-0-F	MD-M51-HM8CSP-K2	991-000508-037	RGL2HMF0451
113B10	MD-M51-HM8CSP-K3	991-000508-038	RGL2HMF0561
113B12	MD-M51-HM8CSP-K5	991-000509-001	RGL2HMF0561J
113B13.1	MD-M51-HM8CSP-K6	991-000509-002	RGL2HMF0701J160
113B14	MD-M51-HM8CSP-K8	991-000509-003	RGL6949MA1
113B16.6	MD-M51-M4HB	991-000509-004	RGL902H705
113C21	MD-M51-M4HB-K0	991-000509-005	RGLHLTS131PU
113C26.4	MD-M51-M4HB-K2	991-000509-006	RGLHLTS171PU
113D42	MD-M51-M4HB-K3	991-000509-007	RGLHLTS201PU
11401FIL	MD-M51-M4HB-K5	991-000509-008	RGLHLTS251PU
11401FIL	MD-M51-M4HB-K6	991-000510-001	RGLHLTS301PU
11402FIL	MD-M51-M4HB-K8	991-000510-002	RGLHMLF0451
11402FIL	MD-M51-M6CSP	991-000510-003	RGLHMLF0561
11403FIL	MD-M51-M6CSP-K0	991-000511-001	RGLL06MMA0401
11403FIL	MD-M51-M6CSP-K2	991-000511-002	RGLL10MMA0701
11404FIL	MD-M51-M6CSP-K3	991-000511-004	RGLL12MMA0901
11404FIL	MD-M51-M6CSP-K5	991-000511-007	RGLS1-18793
11407FIL	MD-M51-M6CSP-K6	991-000511-008	RGLS2-7535
11407FIL	MD-M51-M6CSP-K8	991-000511-013	RGLS2-9156
11408FIL	MD-M51-M6HB	991-000512-001	RGN16MMA1101
11408FIL	MD-M51-M6HB-K0	991-000512-002	RGN25MMA1601
11410 MN	MD-M51-M6HB-K2	991-000512-003	RGS1464
11410 MN	MD-M51-M6HB-K3	991-000512-004	RGS1498
11410 MV	MD-M51-M6HB-K5	991-000512-007	RGS3-10476-01

11410 MV	MD-M51-M6HB-K6	991-000513-001	RGS3-10787
11410FIL	MD-M51-M6HB-K8	991-000513-003	RGS3-13249-05
11410FIL	MD-M51-M8CSP	991-000513-004	RGSM140802
11411FIL	MD-M51-M8CSP-K0	991-000513-007	RGSM140802RGS1464
11411FIL	MD-M51-M8CSP-K2	991-000513-008	RGSM141104
11413FIL	MD-M51-M8CSP-K3	991-000513-042	RGSM141405
11413FIL	MD-M51-M8CSP-K5	991-000513-047	RGSM141505
11414FIL	MD-M51-M8CSP-K6	991-000514-001	RGSM190802RGS1964
11414FIL	MD-M51-M8CSP-K8	991-000515-001	RGSM192206
11415FIL	MD-M51-QM4HB	991-000515-003	RGSM241906
11415FIL	MD-M51-QM6CSP	991-000515-004	RGWAHL0101
1141-62	MD-M51-QM6HB	991-000515-007	RGWAHL0201
1141-63	MD-M51-QM8CSP	991-000515-049	RH1
11416FIL	MD-M52-2FB	991-000516-001	RH2
11416FIL	MD-M52-2MB	991-000516-003	RH3
11417FIL	MD-M52-4FB	991-000516-008	RH3V
11417FIL	MD-M52-4MB	991-000516-012	RH4
11418FIL	MD-M52-HM6CSP	991-000517-001	RH4V
11418FIL	MD-M52-HM6HB	991-000517-007	RH5
11427FIL	MD-M52-HM8CSP	991-000517-038	RH5V
11427FIL	MD-M52-M6CSP	991-000518-001	RHC13
11437FIL	MD-M52-M6HB	991-000518-003	RHC33/2
11437FIL	MD-M52-M8CSP	991-000518-004	RHC33/2PYD
11469FIL	MD-M54-HM4HB	991-000518-006	RHC33V
11469FIL	MD-M54-HM6CSP	991-000518-007	RHCE33-SK7595C
11470FIL	MD-M54-HM6HB	991-000518-008	RHCE33V
11470FIL	MD-M54-HM8CSP	991-000518-029	RHCE53-SK7595E
11471FIL	MD-M54-M10HB-K0	991-000519-001	RHD06L0.2B71
11471FIL	MD-M54-M10HB-K2	991-000519-003	RHD06L0.2BCF
11472FIL	MD-M54-M10HB-K3	991-000519-007	RHD06L0.2BOMDCF
11472FIL	MD-M54-M10HB-K5	991-000519-040	RHD06L0.2BVITOMDCF
11473FIL	MD-M54-M10HB-K6	991-000519-049	RHD06L0.5B71
11473FIL	MD-M54-M10HB-K8	991-000520-001	RHD06L0.5BCF
11478FIL	MD-M54-M4HB	991-000520-006	RHD06L0.5BOMD71
11478FIL	MD-M54-M4HB-K0	991-000536-001	RHD06L0.5BOMDCF
11481FIL	MD-M54-M4HB-K2	991-000536-003	RHD06L0.5BVITCF
11481FIL	MD-M54-M4HB-K3	991-000538-001	RHD06L2BCF
11487FIL	MD-M54-M4HB-K5	991-000538-002	RHD06L2BVITCF
11487FIL	MD-M54-M4HB-K6	991-000539-001	RHD06L3B71
114A-088-GS-0	MD-M54-M4HB-K8	991-000539-005	RHD06L3BCF
114A-106-HS-1	MD-M54-M6HB	991-000539-006	RHD06L3BLUFTCF
114A-164-AT-0	MD-M54-M6HB-K0	991-000540-001	RHD06L3BOMDCF
114A-164-JS-1	MD-M54-M6HB-K2	991-000540-004	RHD06L3BVITCF
11502FIL	MD-M54-M6HB-K3	991-000541-001	RHD06L5BCF
11502FIL	MD-M54-M6HB-K5	991-000541-002	RHD06L5BOMDCF
11507FIL	MD-M54-M6HB-K6	991-000541-007	RHD06L6BCF
11507FIL	MD-M54-M6HB-K8	991-000543-001	RHD06L6BOMDCF
11509FIL	MDR01/01	991-000543-004	RHD06L71
11509FIL	MDR01/02	991-000545-001	RHD06LCF
11512FIL	MDR01/03	991-000546-001	RHD06LLUFTCF
11512FIL	MDR01/04	991-000548-001	RHD06LMS
11513AFIL	ME012015J3	991-000606-001	RHD06LOMD71
11513AFIL	ME012015J4	991-000606-002	RHD06LOMDCF

11513FIL	ME012030J3	991-000606-003	RHD06LPTFECF
11513FIL	ME012030J4	991-000606-004	RHD06LTEFCF
11513SFIL	ME012032J3	991-000606-005	RHD06LVITCF
11513SFIL	ME012032J4	991-000606-007	RHD06LVITOMDCF
11514FIL	ME012037J3	991-000606-008	RHD06S0.2BCF
11514FIL	ME012037J4	991-000606-012	RHD06S0.2BOMDCF
11515FIL	ME012038J4	991-000606-015	RHD06S0.5BCF
11515FIL	ME012039J3	991-000606-017	RHD06S0.5BOMDCF
11517FIL	ME012039J4	991-000607-001	RHD06S3BCF
11517FIL	ME012041J3	991-000607-002	RHD06S3BOMDCF
11518FIL	ME012041J4	991-000607-003	RHD06S71
11518FIL	ME012042J3	991-000607-004	RHD06SCF
11519FIL	ME012042J4	991-000607-005	RHD06SITL71CF
11519FIL	ME012043J4	991-000607-008	RHD06SLUFTOMDCF
1151FIL	ME012055J3	991-000607-011	RHD06SOMD71
1151FIL	ME012055J4	991-000608-001	RHD06SOMDCF
11521FIL	ME014000	991-000608-002	RHD06ZL0.2B71
11521FIL	ME016000	991-000608-004	RHD06ZL0.2BCF
11522FIL	ME016004A2	991-000608-007	RHD06ZL0.2BVITCF
11522FIL	ME016004A3	991-000608-009	RHD06ZL0.5BCF
11523FIL	ME016004A9	991-000608-011	RHD06ZL71
11523FIL	ME018000A1	991-000608-012	RHD06ZLCF
11524FIL	ME018001A1	991-000608-060	RHD06ZSCF
11524FIL	ME019000	991-000608-069	RHD08L0.2B71
11527FIL	ME019001	991-000609-001	RHD08L0.2BCF
11527FIL	ME019002	991-000609-002	RHD08L0.2BOMDCF
11528FIL	ME019003	991-000609-004	RHD08L0.2BVITOMDCF
11528FIL	ME019010	991-000609-009	RHD08L0.5B71
11529FIL	ME019012	991-000609-011	RHD08L0.5BCF
11529FIL	ME019013	991-000609-012	RHD08L0.5BOMDCF
11530FIL	ME019024	991-000609-081	RHD08L0.5BVITCF
11530FIL	ME019039	991-000610-001	RHD08L0.5BVITOMDCF
11531FIL	ME019049	991-000611-001	RHD08L2BOMDCF
11531FIL	ME097003	991-000611-002	RHD08L2BVITCF
11532FIL	ME1040	991-000611-003	RHD08L2BVITOMDCF
11532FIL	ME107003	991-000611-004	RHD08L3B71
11534FIL	ME127003	991-000611-007	RHD08L3BCF
11534FIL	ME1451022524S2I64B94	991-000611-011	RHD08L3BOMDCF
11535FIL	ME153000	991-000611-015	RHD08L4BOMDCF
11535FIL	ME157003	991-000611-017	RHD08L5BCF
11536FIL	ME20510705383I64A7M4	991-000612-001	RHD08L5BOMDCF
11536FIL	ME213000	991-000612-003	RHD08L6BCF
11537FIL	ME217003	991-000612-004	RHD08L6BOMDCF
11537FIL	ME237003	991-000612-007	RHD08L71
11542FIL	ME243000	991-000612-011	RHD08LCF
11542FIL	ME293000	991-000613-001	RHD08LLUFTCF
11543-12-10-1P	ME333000	991-000613-002	RHD08LMS
11543-12-12-1P	ME373000	991-000613-003	RHD08LOMD71
11543-16-16-1P	ME583000	991-000613-004	RHD08LOMDCF
11543-16-16C-1P	ME587003	991-000613-005	RHD08LVITCF
11543-20-16-1P	MEA1453015524S164A74	991-000613-007	RHD08LVITOMDCF
11543-8-8-1P	MECHB5	991-000613-012	RHD08S0.2B71
11543-8-8C-1P	MECHB5	991-000614-001	RHD08S0.2BOMD71

11543FIL	METALICOBJECT/SH5	991-000614-004	RHD08S0.2BOMDCF
11543FIL	METALICOBJECT/SH5	991-000615-001	RHD08S0.5B71
11546-12-10	MF012037J3	991-000615-003	RHD08S0.5BCF
11546-12-12	MF012231J3	991-000615-005	RHD08S0.5BOMDCF
11546-12-8	MF012237J3	991-000615-007	RHD08S3BCF
11546-16-12	MF012256J3	991-000616-001	RHD08S3BOMDCF
11546-16-16	MF015000	991-000616-002	RHD08S5BOMDCF
11546-20-12	MF015001	991-000616-003	RHD08S71
11546-20-16	MF016000	991-000616-004	RHD08SCF
11546-20-20	MF016006A31	991-000616-007	RHD08SITL71CF
11546-24-16	MF016007	991-000616-008	RHD08SOMD71
11546-24-20	MF016009A1	991-000616-009	RHD08SOMDCF
11546-8-8	MF018000A1	991-000616-011	RHD08SVITCF
11548-12-10	MF019004	991-000616-012	RHD08ZL0.2BCF
11548-12-12	MF019011	991-000616-016	RHD08ZL0.5BCF
11548-12-8	MF019012	991-000617-001	RHD08ZL0.5BITL71CF
11548-16-12	MF019024	991-000617-002	RHD08ZL2BVITCF
11548-16-16	MF019412	991-000617-004	RHD08ZL71
11548-16-16C	MF053000	991-000617-006	RHD08ZLCF
11548-16-20	MF057003	991-000617-007	RHD08ZLVITCF
11548-16-24	MF107003	991-000617-008	RHD08ZS3BCF
11548-20-12	MF123000	991-000618-001	RHD08ZS71
11548-20-16	MF203000	991-000618-003	RHD08ZSCF
11548-20-20	MF25BA-075M05-06003-01123	991-000618-004	RHD10L0.2B71
11548-24-16	MF25BA-075M05-06003-01123	991-000618-005	RHD10L0.2BCF
11548-24-20	MF25BA-66AM05-38A02-06A21	991-000618-006	RHD10L0.2BOMD71
11548-24-24	MF25BA-66AM05-38A02-06A21	991-000618-007	RHD10L0.2BOMDCF
11548-24-24C	MF25SA-063M04-04003-00920	991-000618-064	RHD10L0.2BPTFECF
11548-24-32	MF25SA-063M04-04003-00920	991-000618-081	RHD10L0.2BVITOMDCF
11548-32-20	MF25SA-063M05-04003-01020	991-000619-001	RHD10L0.5B71
11548-32-24	MF25SA-063M05-04003-01020	991-000619-004	RHD10L0.5BCF
11548-32-32	MF25SA-075M05-06003-01123	991-000619-005	RHD10L0.5BOMDCF
11548-32-32C	MF25SA-075M05-06003-01123	991-000619-008	RHD10L0.5BVITOMDCF
11548-8-8	MF25SA-66BM05-38A02-06A21	991-000619-009	RHD10L2BCF
11548FIL	MF25SA-66BM05-38A02-06A21	991-000619-012	RHD10L2BMGEBCF
11548FIL	MF32BA-075M05-06003-01432	991-000619-068	RHD10L2BOMDCF
11549FIL	MF32BA-075M05-06003-01432	991-000620-001	RHD10L2BVITCF
11549FIL	MF32BA-090M05-06003-01432	991-000620-004	RHD10L3B71
1154FIL	MF32BA-090M05-06003-01432	991-000620-009	RHD10L3BCF
1154FIL	MF32BA-98AM06-07303-01432	991-000620-041	RHD10L3BOMDCF
11560FIL	MF32BA-98AM06-07303-01432	991-000636-003	RHD10L3BVITCF
11560FIL	MF32SA-100M06-08003-01430	991-000636-005	RHD10L4BPTFECF
11561FIL	MF32SA-100M06-08003-01430	991-000636-006	RHD10L5BCF
11561FIL	MF32SA-98AM05-07302-12A30	991-000636-008	RHD10L5BOMDCF
11562FIL	MF32SA-98AM05-07302-12A30	991-000638-001	RHD10L6BCF
11562FIL	MF37/FRAME20-60	991-000638-003	RHD10L6BOMDCF
11565FIL	MF37/FRAME20-60G	991-000639-001	RHD10L71
11565FIL	MF37/FRAME73-90	991-000639-004	RHD10LCF
11566FIL	MF37/FRAME73-90G	991-000640-001	RHD10LLUFTCF
11566FIL	MF37-114.3	991-000641-001	RHD10LMS
11567FIL	MF37-115	991-000641-003	RHD10LOMD71
11567FIL	MF37-115G	991-000643-001	RHD10LOMDCF
11570-10-10-1P	MF37-125	991-000644-001	RHD10LOMDLUFTCF

11570-12-10-1P	MF37-139.7	991-000645-003	RHD10LPTFECF
11570-12-12-1P	MF37-140	991-000646-001	RHD10LVITCF
11570-12-16-1P	MF37-16	991-000646-005	RHD10LVITOMDCF
11570-16-12-1P	MF37-20	991-000646-007	RHD10S0.2BOMDCF
11570-16-16-1P	MF37-25	991-000806-001	RHD10S0.5BCF
11570-20-12-1P	MF37-30	991-000806-003	RHD10S0.5BITL71CF
11570-20-16-1P	MF37-38	991-000806-004	RHD10S0.5BOMDCF
11570-8-8-1P	MF37-38G	991-000806-005	RHD10S3BCF
11571-12-12-1P	MF37-42	991-000806-008	RHD10S6BCF
11571-16-12-1P	MF37-48.3	991-000806-011	RHD10S71
11571-16-16-1P	MF37-50	991-000806-012	RHD10SCF
11571-20-16-1P	MF37-50G	991-000806-013	RHD10SITL71CF
11571-20-20-1P	MF37-60	991-000806-014	RHD10SLUFTCF
11571-20-24-1P	MF37-60.3	991-000807-001	RHD10SMS
11571-24-16	MF37-60G	991-000807-003	RHD10SOMD71
11571-24-24-1P	MF37-73	991-000807-004	RHD10SOMD71N
11571-32-24	MF37-73E	991-000807-005	RHD10SOMDCF
11571-32-32-1P	MF37-75	991-000807-007	RHD10SVITCF
11571-40-32	MF37-75G	991-000807-008	RHD10ZL0.2B71
11573-12-12	MF37-88.9	991-000807-025	RHD10ZL0.2BCF
11573-16-12-1P	MF37-90	991-000807-037	RHD10ZL0.5BCF
11573-16-16	MF37-90E	991-000807-039	RHD10ZL2BCF
11573-16-20-1P	MF37-90G	991-000807-040	RHD10ZL3BCF
11577-12-12	MF3800-PSPU	991-000807-049	RHD10ZL71
11577-12-8	MF3810 P7-SP	991-000808-001	RHD10ZLCF
11577-16-12	MF3810-SP	991-000808-002	RHD10ZLVITCF
11577-16-16	MF3821-PLUGG	991-000808-003	RHD10ZS2BCF
11577-8-8	MF3821-SP	991-000808-004	RHD10ZS71
11578-12-12	MF3BOXINSERT	991-000808-005	RHD10ZSCF
11578-16-16	MF3EO206G	991-000808-007	RHD10ZSVITCF
1158-00750	MF3EO208G	991-000808-008	RHD12L0.2B71
1158-00750	MF3EO210G	991-000808-029	RHD12L0.2BCF
115A-189-AS-0	MF3EO212G	991-000808-033	RHD12L0.2BITL71CF
115NX-12-12	MF3EO215G	991-000808-036	RHD12L0.2BOMD71
115NX-16-16	MF3EO216G	991-000808-040	RHD12L0.2BOMDCF
115NX-8-08	MF3EO218G	991-000808-049	RHD12L0.2BVITOMDCF
1-16 FHG5-S	MF3EO220G	991-000808-050	RHD12L0.5B71
11600FIL	MF3EO221.3	991-000809-001	RHD12L0.5BCF
11600FIL	MF3EO222G	991-000809-003	RHD12L0.5BOMD71
11606FIL	MF3EO225G	991-000809-004	RHD12L0.5BOMDCF
11606FIL	MF3EO226.9	991-000809-005	RHD12L0.5BVITCF
11607FIL	MF3EO228G	991-000809-008	RHD12L0.5BVITOMDCF
11607FIL	MF3EO230G	991-000809-027	RHD12L2B71
11608FIL	MF3EO232	991-000809-036	RHD12L2BCF
11608FIL	MF3EO233.7	991-000809-037	RHD12L2BOMDCF
11609FIL	MF3EO235G	991-000809-044	RHD12L3B71
11609FIL	MF3EO238G	991-000809-048	RHD12L3BCF
11611FIL	MF3EO242G	991-000809-049	RHD12L3BOMD71
11611FIL	MF3EO2P306	991-000810-001	RHD12L3BOMDCF
11612FIL	MF3EO2P308	991-000810-003	RHD12L3BVITCF
11612FIL	MF3EO2P310	991-000810-004	RHD12L4BOMDCF
1161300003-01	MF3EO2P312	991-000810-005	RHD12L5BCF
1161300004-01	MF3EO2P315	991-000810-007	RHD12L5BOMDCF

1161300005-01	MF3EO2P316	991-000810-008	RHD12L6BCF
1161300007-01	MF3EO2P318	991-000810-035	RHD12L6BOMDCF
1161300008-01	MF3EO2P320	991-000810-036	RHD12L6BVITCF
1161310026-01	MF3EO2P322	991-000811-001	RHD12L6BVITOMDCF
11614FIL	MF3EO2P325	991-000811-003	RHD12L71
11614FIL	MF3EO2P328	991-000811-004	RHD12LCF
11615FIL	MF3EO2P330	991-000811-006	RHD12LITL71CF
11615FIL	MF3EO2P335	991-000811-007	RHD12LLUFTCF
1161600015-01	MF3EO2P338	991-000811-008	RHD12LNBR71
1161600016-01	MF3EO2P342	991-000811-010	RHD12LOFEDCF
11616FIL	MF5000-PSPU	991-000811-013	RHD12LOMD71
11616FIL	MF5010 P7-SP	991-000812-001	RHD12LOMDCF
1161700004-01	MF5010P6-PLUGG	991-000812-002	RHD12LPTFECF
1161700005-01	MF5010P7-PLUGG	991-000812-004	RHD12LSTL4CF
11618FIL	MF5010-SP	991-000812-006	RHD12LTEF71
11618FIL	MF5021-PLUGG	991-000812-007	RHD12LVITCF
11619FIL	MF5021-SP	991-000812-008	RHD12LVITOMD5BCF
11619FIL	MF50BA-130M08-11003-01940	991-000812-028	RHD12LVITOMDCF
11629FIL	MF50BA-130M08-11003-01940	991-000812-032	RHD12S0.2B71
11629FIL	MF50SA-100M06-08003-01940	991-000812-037	RHD12S0.2BCF
1163.23.P	MF50SA-100M06-08003-01940	991-000812-039	RHD12S0.2BOMDCF
11630FIL	MF7500-PSPU	991-000812-040	RHD12S0.5B71
11630FIL	MF7510-SP	991-000813-001	RHD12S0.5BCF
11648-16-16	MF7521-PLUGG	991-000813-002	RHD12S0.5BITL71CF
11648-20-20	MF7521-SP	991-000813-003	RHD12S0.5BOMDCF
11649FIL	MFA.1101.310	991-000813-004	RHD12S0.5BVITCF
11649FIL	MFA.1101.341	991-000813-005	RHD12S2BCF
11671-16-16	MFA.1111.310	991-000813-007	RHD12S2BOMDCF
11671-24-24	MFA.1111.341	991-000813-008	RHD12S3B71
11671-32-32	MFA.1111.342	991-000813-040	RHD12S3BCF
11679FIL	MFA.1211.341	991-000813-042	RHD12S3BOMDCF
11679FIL	MFA.1301.310	991-000814-001	RHD12S3BVITCF
11685FIL	MFA.1301.341	991-000814-004	RHD12S4BOMDCF
11685FIL	MFA.2101.346	991-000814-008	RHD12S5BCF
11686FIL	MFA.2101.349	991-000814-033	RHD12S5BOMDCF
11686FIL	MFA.2111.346	991-000815-001	RHD12S6BCF
11687FIL	MFA.2111.349	991-000815-003	RHD12S6BOMDCF
11687FIL	MFA.2301.346	991-000815-004	RHD12S71
11688FIL	MFA.2401.346	991-000815-008	RHD12SCF
11688FIL	MFA.2501.346	991-000816-001	RHD12SITL71CF
11693FIL	MFA.2511.346	991-000816-002	RHD12SOFEDCF
11693FIL	MFA.2601.346	991-000816-003	RHD12SOMD0.2BCF
11694FIL	MFA.3101.346	991-000816-004	RHD12SOMD71
11694FIL	MFA.3101.349	991-000816-005	RHD12SOMDCF
116A-036-BS-0	MFA.3111.114	991-000816-007	RHD12SSTL2CF
116A-054-BS-0	MFA.3111.221	991-000816-008	RHD12STEF71
116A-071-AS-E-F-V	MFA.3111.341	991-000816-011	RHD12SVITCF
116A-088-BS-0	MFA.3111.342	991-000817-001	RHD12SVITOMDCF
116A-164-BS-0	MFA.3111.346	991-000817-002	RHD12ZL0.2BCF
116A-241-AS-1	MFA.3111.349	991-000817-003	RHD12ZL0.2BVITCF
116A-241-AT-1-S-F	MFA.3211.221	991-000817-004	RHD12ZL0.5B71
1-16F4OHG5S	MFA.3301.346	991-000817-005	RHD12ZL0.5BCF
1-16F4OHMG5SS	MFA.3301.349	991-000817-006	RHD12ZL0.5BVITCF

11703FIL	MFA.3401.346	991-000817-007	RHD12ZL2BCF
11703FIL	MFA.3401.349	991-000817-008	RHD12ZL3BCF
11706FIL	MFA.3501.346	991-000817-025	RHD12ZL71
11706FIL	MFA.3501.349	991-000817-028	RHD12ZLCF
1173FIL	MFA.3511.342	991-000817-033	RHD12ZS71
1173FIL	MFA.3601.346	991-000817-037	RHD12ZSCF
11740FIL	MFA.3701.346	991-000817-038	RHD12ZSVITCF
11740FIL	MFA.3701.348	991-000817-039	RHD14S71
11741-00140	MFA.3701.349	991-000817-040	RHD14SCF
11741-00140	MFC.1000	991-000818-001	RHD14SOMD71
11741-00240	MFC.2700	991-000818-003	RHD14SOMDCF
11741-00240	MFC.3000	991-000818-004	RHD14ZSCF
11741-00450	MFC.3500	991-000818-005	RHD15L/STL07CF
11741-00450	MFC.3600	991-000818-007	RHD15L0.2B71
11741-00545	MFC.3900	991-000818-008	RHD15L0.2BCF
11741-00545	MFE.1000	991-000818-038	RHD15L0.2BOMDCF
11741-00620	MFE.2000	991-000818-039	RHD15L0.2BVITCF
11741-00620	MFE.2100	991-000818-049	RHD15L0.2BVITL71CF
11741-00650	MFE.2600	991-000819-001	RHD15L0.2BVITOMDCF
11741-00650	MFE.2700	991-000819-003	RHD15L0.5B71
11741-00700	MFE.2800	991-000819-004	RHD15L0.5BCF
11741-00700	MFE.2900	991-000819-005	RHD15L0.5BMGEBCF
11741-00780	MFE.3000	991-000819-007	RHD15L0.5BMS
11741-00780	MFE.3100	991-000819-008	RHD15L0.5BOMD71
11741-01000	MFE.3500	991-000819-032	RHD15L0.5BOMDCF
11741-01000	MFE.3600	991-000819-037	RHD15L0.5BVITCF
11741-01860	MFE.3700	991-000819-040	RHD15L1.5BOMDCF
11741-01860	MFE.3800	991-000819-049	RHD15L2B71
11742-00055	MFE.3900	991-000820-001	RHD15L2BCF
11742-00055	MFL.3801.346	991-000820-004	RHD15L2BOMDCF
11742-00120	MFL.3901.346	991-000820-007	RHD15L2BVITCF
11742-00120	MFR.2300	991-000820-008	RHD15L3B71
11742-00275	MFR.2400	991-000820-024	RHD15L3BCF
11742-00275	MFR.2600	991-000836-001	RHD15L3BMGEBCF
11742-00330	MFR.2700	991-000836-002	RHD15L3BOMDCF
11742-00330	MFR.3300	991-000836-004	RHD15L3BVITOMDCF
11742-00400	MFR.3400	991-000838-003	RHD15L4BCF
11742-00400	MFR.3600	991-000839-001	RHD15L5BCF
11742-00500	MFR.3700	991-000839-004	RHD15L5BOMDCF
11742-00500	MFS6-PV2-M5	991-000839-025	RHD15L5BVITCF
11742-00550	MFS6-PV2-M5	991-000840-005	RHD15L6BCF
11742-00550	MFS8-PY5-01	991-000840-010	RHD15L6BOMDCF
11742-00600	MFS8-PY5-01	991-000841-001	RHD15L6BVITOMDCF
11742-00600	MGR.2133	991-000841-002	RHD15L71
11742-00700	MGR.2143	991-000843-001	RHD15LCF
11742-00700	MGR.2145	991-000844-001	RHD15LITL71CF
11742-00750	MGR.2153	991-000846-007	RHD15LMS
11742-00750	MGR.2160	991-000849-003	RHD15LOFEDCF
11742-01060	MGR.2170	991-000849-007	RHD15LOMD71
11742-01060	MGR.3131	991-000850-001	RHD15LOMDCF
11742-01420	MGR.3141	991-000850-010	RHD15LOMDVITCF
11742-01420	MGV430BALAB3XR6000	991-000850-020	RHD15LVITCF
11742-01460	MH10530045192I65A74	991-001002-008	RHD15LVITOMDCF

11742-01460	MH10530065192I654	991-001014-095	RHD15ZL0.2BCF
11742-01500	MH10530065192I65A74	991-001014-415	RHD15ZL0.5BCF
11742-01500	MH10530085192I654	991-001014-419	RHD15ZL1.5BCF
11742-01600	MH10530085192I65A74	991-001053-008	RHD15ZL2BCF
11742-01600	MH10530085193M644	991-001106-008	RHD15ZL3BCF
11742-01700	MH1053008519S2I654	991-001110-007	RHD15ZL71
11742-01700	MH1053008519S2I65A74	991-001110-067	RHD15ZLCF
11742-01800	MH10530085242I654	991-001121-005	RHD16S0.2B71
11742-01800	MH10545025192I654	991-001302-008	RHD16S0.2BCF
11742-01860	MH10545045192I65A7M4	991-001302-011	RHD16S0.2BOMDCF
11742-01860	MH10545049192I654	991-001381-392	RHD16S0.2BVITCF
11742-01900	MH10545049192I65A74	991-001393-035	RHD16S0.5B71
11742-01900	MH10545065192I654	991-003000-001	RHD16S0.5BCF
11742-02000	MH10545065192I65A74	991-003000-003	RHD16S0.5BITL71CF
11742-02000	MH10545066242I654	991-003000-004	RHD16S0.5BOMDCF
11743-00200	MH10545085192I654	991-003000-005	RHD16S0.5BVITCF
11743-00200	MH1054508519S2I65A74	991-003000-006	RHD16S0.5BVITOMDCF
11743-00300	MH10545085242I654	991-003000-007	RHD16S1.5BCF
11743-00300	MH10545086242I65A74	991-003000-009	RHD16S2BOMDCF
11743-00660	MH1054508624S2I65A74	991-003000-010	RHD16S3BCF
11743-00660	MH10545089192I654	991-003000-011	RHD16S3BOMDCF
11743-00700	MH10550025192I65A6ML2	991-003000-013	RHD16S4BCF
11743-00700	MH10550049192I652	991-003000-015	RHD16S4BOMDCF
11743-00720	MH10560065192I654	991-003000-016	RHD16S5BCF
11743-00720	MH10560065192I65A74	991-003000-017	RHD16S5BOMDCF
11743-01000	MH10560069192I65A74	991-003000-018	RHD16S6BCF
11743-01000	MH10560085192I654	991-003000-025	RHD16S6BOMDCF
11743-01550	MH10575046242I65M4	991-003000-026	RHD16S71
11743-01550	MH14510085243I65A74	991-003000-027	RHD16SCF
11743-01755	MH14510155243I654	991-003000-030	RHD16SITL71CF
11743-01755	MH14510155243I65A74	991-003000-032	RHD16SLUFTCF
11743-02255	MH14510225243I65A74	991-003000-033	RHD16SNBROMD71
11743-02255	MH14510285243I65A74	991-003000-035	RHD16SOFEDCF
11743-12-10-1P	MH14520085243I65A74	991-003000-036	RHD16SOMD71
11743-12-12-1P	MH14520155243I654	991-003000-039	RHD16SOMDCF
11743-16-16-1P	MH14520155243I65A74	991-003000-042	RHD16SVITCF
11743-20-16-1P	MH14520225243I654	991-003000-045	RHD16SVITOMDCF
11743-8-8-1P	MH14520285243I654	991-003000-048	RHD16ZS0.5BCF
11744-00150	MH14520285243I65A74	991-003000-054	RHD16ZS3BCF
11744-00150	MH14530045243I654	991-003000-056	RHD16ZS71
11744-00160	MH14530085243I654	991-003000-078	RHD16ZSCF
11744-00160	MH14530085243I65A74	991-003000-083	RHD18L0.1BCF
11744-00300	MH14530155243I654	991-003000-090	RHD18L0.2B71
11744-00300	MH14530155243I65A74	991-003000-092	RHD18L0.2BCF
11744-00400	MH14530225243I654	991-003000-093	RHD18L0.2BOMDCF
11744-00400	MH14530225243I65A74	991-003000-100	RHD18L0.2BVITCF
11744-00570	MH14530225283I654	991-003000-102	RHD18L0.2BVITOMDCF
11744-00570	MH14530285243I654	991-003000-174	RHD18L0.5B71
11744-00600	MH14530285243I65A74	991-003000-184	RHD18L0.5BCF
11744-00600	MH14530285283I654	991-003000-185	RHD18L0.5BITL71VCF
11744-00650	MH14545155243I654	991-003000-186	RHD18L0.5BOMD71
11744-00650	MH14545155243I65A74	991-003000-187	RHD18L0.5BOMDCF
11744-00915	MH14545155243I65A7M4	991-003000-192	RHD18L0.5BVITCF

11744-00915	MH1454515524S3I65A74	991-003000-237	RHD18L02.BOMD71
11744-01000	MH1454515524S3I65A7M4	991-003000-253	RHD18L1.5BCF
11744-01000	MH1454515528S3I65A7M4	991-003000-254	RHD18L1.5BOMDCF
11744-01150	MH14545225243I654	991-003000-255	RHD18L2B71
11744-01150	MH1454522524S3I654	991-003001-001	RHD18L2BCF
11744-01250	MH14556085243I65A74	991-003001-003	RHD18L2BOMDCF
11744-01250	MH14556155243I654	991-003001-004	RHD18L2BVITCF
11744-01350	MH14556285243I65A74	991-003001-005	RHD18L2BVITOMDCF
11744-01350	MH20510705383I65A74	991-003001-007	RHD18L3B71
11744-01400	MH20520285383I65A74	991-003001-009	RHD18L3BCF
11744-01400	MH20520505383I65A74	991-003001-015	RHD18L3BOMDCF
11744-01520	MH20520705A63I654	991-003001-017	RHD18L4BCF
11744-01520	MH20520905383I654	991-003001-026	RHD18L4BOMDCF
11745-00125	MH20530285383I654	991-003001-032	RHD18L5BCF
11745-00125	MH20530285383I65A74	991-003001-033	RHD18L5BOMDCF
11745-00200	MH20530285A63I644	991-003001-044	RHD18L5BPTFECF
11745-00200	MH20530285E13I64D54	991-003001-065	RHD18L5BVITCF
11745-00300	MH20530505383I654	991-003001-174	RHD18L6BCF
11745-00300	MH20530505383I65A74	991-003001-179	RHD18L6BOMDCF
11745-00800	MH2053050538S3I654	991-003001-180	RHD18L6BVITOMDCF
11745-00800	MH20530705383I654	991-003001-186	RHD18L71
11745-01100	MH20530905383I654	991-003002-001	RHD18LCF
11745-01100	MH561000,4592ID652	991-003002-002	RHD18LITL71CF
11745-01270	MH561000,459S2ID652	991-003002-003	RHD18LITL71OMDCF
11745-01270	MH56500,45112ID654	991-003002-004	RHD18LLUFTCF
11745-01450	MH56500,65112ID654	991-003002-005	RHD18LMS
11745-01450	MH56950,4592ID654	991-003002-007	RHD18LOFEDEOMDCF
11745-01520	MH56950,65112ID654	991-003002-009	RHD18LOMD71
11745-01520	MH56950,6592ID654	991-003002-010	RHD18LOMDCF
11745-01600	MH7037025111I654	991-003002-011	RHD18LPTFECF
11745-01600	MH7037025112I654	991-003002-013	RHD18LVITCF
11745-02500	MH7070025112I654	991-003002-015	RHD18LVITOMDCF
11745-02500	MH707002511S2I654	991-003002-017	RHD18ZL0.2BCF
11746-01050	MH70701,55112I654	991-003002-026	RHD18ZL0.2BVITCF
11746-01050	MH70702,55112I654	991-003002-029	RHD18ZL0.5BCF
11746-01400	MH70702,55142I65C64	991-003002-033	RHD18ZL0.5BVITCF
11746-01400	MH70751,55142I652	991-003002-039	RHD18ZL2B71
11746-01620	MH70751,55142I65A62	991-003002-057	RHD18ZL2BCF
11746-01620	MHA10530049192I654	991-003002-088	RHD18ZL2BVITCF
11746-02400	MHA10530065192I65A74	991-003002-089	RHD18ZL3BCF
11746-02400	MHA10530085192I654	991-003002-174	RHD18ZL4BCF
11746-12-10	MHA10530085192I65A74	991-003002-180	RHD18ZL71
11746-12-12	MHA10545025192I654	991-003002-186	RHD18ZLCF
11746-12-8	MHA10545085192I654	991-003003-001	RHD18ZLVITCF
11746-16-12	MHA10545085192I65A74	991-003003-003	RHD20S0.2BCF
11746-16-16	MHA10545086242I654	991-003003-004	RHD20S0.2BOMDCF
11746-20-12	MHA10545089192I654	991-003003-005	RHD20S0.5BCF
11746-20-16	MHA10560045192I654	991-003003-007	RHD20S0.5BITL71CF
11746-20-20	MHA10560045192I65A74	991-003003-009	RHD20S0.5BOMDCF
11746-24-20	MHA10560065192I654	991-003003-010	RHD20S2B71
11746-8-8	MHA14510155243I654	991-003003-011	RHD20S2BCF
11748-00600	MHA14510225243I65A74	991-003003-013	RHD20S2BOMDCF
11748-00600	MHA14510285243I65A74	991-003003-015	RHD20S3BCF

11748-00830	MHA14520155243I65A74	991-003003-017	RHD20S3BOMD71
11748-00830	MHA14520225243I654	991-003003-026	RHD20S3BOMDCF
11748-01040	MHA14520225243I65A74	991-003003-030	RHD20S5BCF
11748-01040	MHA14520285243I654	991-003003-032	RHD20S5BOMDCF
11748-01300	MHA14520285243I65A74	991-003003-033	RHD20S71
11748-01300	MHA14530085243I654	991-003003-053	RHD20SCF
11748-12-10	MHA14530085243I65A74	991-003003-057	RHD20SITL71CF
11748-12-12	MHA14530155243I65A74	991-003003-077	RHD20SOMD71
11748-12-8	MHA14530225243I654	991-003003-096	RHD20SOMDCF
11748-16-12	MHA14530225243I65A74	991-003003-124	RHD20SVITCF
11748-16-16	MHA14545085243I654	991-003003-143	RHD20SVITOMDCF
11748-16-20	MHA14545085243I65A74	991-003003-173	RHD20ZS0.5BCF
11748-20-12	MHA14545155243I654	991-003003-185	RHD20ZS5BCF
11748-20-16	MHA14545155243I65A74	991-003003-186	RHD20ZS71
11748-20-20	MHA14545225243I654	991-003003-188	RHD20ZSCF
11748-24-20	MHA14545225243M654	991-003003-189	RHD22L0.1BCF
11748-24-24	MHA14545285243I65A74	991-003003-192	RHD22L0.2B71
11748-24-32	MHA14556225243I654	991-003003-205	RHD22L0.2BCF
11748-32-24	MHA14556225243I65A74	991-003004-001	RHD22L0.2BOMDCF
11748-32-32	MHA1455628524S3I65A74	991-003004-003	RHD22L0.2BVITCF
11748-8-8	MHA20510505383I654	991-003004-005	RHD22L0.5B71
1174FIL	MHA20520505383I65A74	991-003004-007	RHD22L0.5BCF
1174FIL	MHA20520705383I65A74	991-003004-010	RHD22L0.5BITL71OMDCF
11751-00500	MHA20530505383I654	991-003004-015	RHD22L0.5BOMDCF
11751-00500	MHA56500,4592ID654	991-003004-017	RHD22L0.5BVITCF
11752-01220	MHA7070025112I654	991-003004-025	RHD22L1.5BMGEBCF
11752-01220	MHA70701,55112I654	991-003004-027	RHD22L1.5BOMDCF
11752-01660	MHA70701,55142I654	991-003004-028	RHD22L2.5BCF
11752-01660	MHA70751,55112I652	991-003004-030	RHD22L2.5BOMDCF
11753-03555	MHA70751,55142I652	991-003004-032	RHD22L2B71
11753-03555	MHA70751,55142I65A62	991-003004-038	RHD22L2BCF
11754-00850	MHASV14530285243I65A74	991-003004-039	RHD22L2BOMDCF
11754-00850	MHASV14556285243I65A74	991-003004-076	RHD22L2BVITCF
11754-01535	MHASV2052090538S3I654	991-003004-172	RHD22L3B71
11754-01535	MHB20510505383I654	991-003004-173	RHD22L3BCF
11755-02280	MHB20510505383I65A74	991-003004-174	RHD22L3BOMDCF
11755-02280	MHB20510905383I65A74	991-003004-185	RHD22L3BVITOMDCF
11756-01620	MHC-010-A-53	991-003004-191	RHD22L4BCF
11756-01620	MHC-010-D-53	991-003004-204	RHD22L5BCF
11756-02108	MHC-010-SFNK-00B	991-003004-224	RHD22L5BOMDCF
11756-02108	MHC-022-SCSH-00B	991-003005-001	RHD22L6BCF
11756-02413	MHC-025-SBSH-00B	991-003005-003	RHD22L6BOMDCF
11756-02413	MHC-050-SJSH-00B	991-003005-004	RHD22L6BVITOMDCF
11761-00165	MHE1050B	991-003005-005	RHD22L71
11761-00165	MHE1050R	991-003005-007	RHD22LCF
11764-00500	MHE1050S	991-003005-009	RHD22LITL71CF
11764-00500	MHE1350B	991-003005-010	RHD22LITL71OMDCF
11770-10-10-1P	MHE1350R	991-003005-013	RHD22LLUFTCF
11770-12-10-1P	MHE1350S	991-003005-014	RHD22LOMD71
11770-12-12-1P	MHE1930B	991-003005-015	RHD22LOMDCF
11770-16-12-1P	MHE1930R	991-003005-016	RHD22LPTFECF
11770-16-16-1P	MHE1930S	991-003005-017	RHD22LVITCF
11770-20-16	MHF1025	991-003005-018	RHD22LVITOMDCF

11770-8-8-1P	MHF1025B	991-003005-027	RHD22ZL0.2BCF
11771-12-12-1P	MHF1025R	991-003005-028	RHD22ZL0.2BVITCF
11771-16-16-1P	MHF1325	991-003005-032	RHD22ZL0.5B71
11771-20-16-1P	MHF1325B	991-003005-033	RHD22ZL0.5BCF
11771-20-20-1P	MHF1325R	991-003005-034	RHD22ZL3BCF
11771-24-20-1P	MHN1050S	991-003005-042	RHD22ZL3BVITCF
11771-24-24-1P	MHN1350S	991-003005-057	RHD22ZL71
11771-32-32-1P	MHP1030B	991-003005-077	RHD22ZLCF
11773-12-12	MHP1030R	991-003005-081	RHD22ZLVITCF
11773-16-12	MHP1030T	991-003005-087	RHD25S0.2BCF
11773-16-16	MHP1330B	991-003005-090	RHD25S0.2BOMD71
11777-12-12	MHP1330R	991-003005-095	RHD25S0.2BOMDCF
11777-12-8	MHP1330T	991-003005-097	RHD25S0.2BVITCF
11777-16-12	MHP1930T	991-003005-126	RHD25S0.2BVITOMDCF
11777-16-16	MHS1025	991-003005-134	RHD25S0.5B71
11777-8-8	MHS1025B	991-003005-167	RHD25S0.5BCF
11778-12-12	MHS1025R	991-003005-187	RHD25S0.5BCFBP
11778-16-16	MHS1325	991-003005-206	RHD25S0.5BOMDCF
11779FIL	MHS1325B	991-003006-001	RHD25S0.5BVITCF
11779FIL	MHS1325R	991-003006-002	RHD25S0.5BVITOMDCF
11780FIL	MHSV14520285243I654	991-003006-003	RHD25S1.5BCF
11780FIL	MHSV14530225243I65A74	991-003006-005	RHD25S2.5BOMDCF
11783FIL	MHSV14545225243I654	991-003006-009	RHD25S2BCF
11783FIL	MHSV2051090542S3I644	991-003006-013	RHD25S2BOMDCF
11784FIL	MHSV20520505383I654	991-003006-015	RHD25S3BCF
11784FIL	MHSV20520505423I654	991-003006-017	RHD25S3BOMD71
11785FIL	MHSV20530905383I654	991-003006-021	RHD25S3BOMDCF
11785FIL	MHV20530505423I654	991-003006-027	RHD25S5BCF
11786FIL	MIK-1	991-003006-032	RHD25S5BOMDCF
11786FIL	MJ012003J4	991-003006-033	RHD25S5BVITCF
11787FIL	MJ012007J4	991-003006-076	RHD25S5BVITOMDCF
11787FIL	MJ019000	991-003006-142	RHD25S6B=STAHL71
11788FIL	MJ019003	991-003006-143	RHD25S6BCF
11788FIL	MK-CE016	991-003006-174	RHD25S6BOMDCF
11794FIL	MK-CE025	991-003006-182	RHD25S71
11794FIL	MK-CE032	991-003006-183	RHD25SCF
11795FIL	MK-CE040	991-003006-185	RHD25SITL71CF
11795FIL	MK-CE050	991-003006-186	RHD25SOFEDCF
11796FIL	MK-PV0004245N	991-003006-205	RHD25SOMD71
11796FIL	MK-PV0004542N	991-003007-001	RHD25SOMDCF
11797FIL	MK-PV000EAZN	991-003007-002	RHD25SOMDVITCF
11797FIL	MK-PV000EX1N42	991-003007-003	RHD25SVITCF
11798FIL	MK-PV000EX1N45	991-003007-005	RHD25SVITOMDCF
11798FIL	MK-PV000EX1V42	991-003007-006	RHD25ZS0.5BCF
11799FIL	MK-PV000EX1V45	991-003007-008	RHD25ZS3BCF
11799FIL	MK-PV000EXT42	991-003007-009	RHD25ZS71
117A-0785	MK-PV000EXT45	991-003007-012	RHD25ZSCF
117NX-16-16	MK-PVAC1ECM	991-003007-014	RHD28L0.2B71
117NX-20-20	MK-PVAC1PCS	991-003007-015	RHD28L0.2BCF
11800FIL	MK-PVBG1AMN42	991-003007-016	RHD28L0.2BOMD71
11800FIL	MK-PVBG1BMN42	991-003007-019	RHD28L0.2BOMDCF
1180-1154	MK-PVBG1GMN42	991-003007-021	RHD28L0.2BVITCF
11802FIL	MK-PVBG1JMN42	991-003007-027	RHD28L0.2BVITOMDCF

11802FIL	MK-PVBG1K0142	991-003007-032	RHD28L0.5B71
1180309260-01	MK-PVBG1K1142	991-003007-033	RHD28L0.5BCF
11804FIL	MK-PVBG1K1342	991-003007-056	RHD28L0.5BOMD71
11804FIL	MK-PVBG1K1442	991-003007-057	RHD28L0.5BOMDCF
11811FIL	MK-PVBG1K2042	991-003007-075	RHD28L0.5BVITCF
11811FIL	MK-PVBG1K2242	991-003007-108	RHD28L0.5BVITOMDCF
1181280131-01	MK-PVBG1TMN42	991-003007-152	RHD28L1.5BCF
1181283131-01	MK-PVBG1YMN42	991-003007-153	RHD28L1.5BOMDCF
1181300091-01	MK-PVBG2AMN40	991-003007-194	RHD28L2.5BCF
1181301240-01	MK-PVBG2ASN40	991-003007-233	RHD28L2.5BOMDCF
1181302023-01	MK-PVBG2BMN40	991-003007-234	RHD28L2B71
1181303240-01	MK-PVBG2CMN40	991-003008-002	RHD28L2BCF
1181304240-01	MK-PVBG2JMN40	991-003008-003	RHD28L2BOMDCF
1181305089-01	MK-PVBG2JMV40	991-003008-005	RHD28L2BVITCF
1181309012-01	MK-PVBG2K0140	991-003008-008	RHD28L3BCF
1181309288-01	MK-PVBG2K0240	991-003008-009	RHD28L3BOMD71
1181600014-01	MK-PVBG2K1140	991-003008-014	RHD28L3BOMDCF
1181600018-01	MK-PVBG2K1240	991-003008-015	RHD28L3BVITOMDCF
1181600071-01	MK-PVBG2K1340	991-003008-018	RHD28L4BOMDCF
1181600072-01	MK-PVBG2K1440	991-003008-020	RHD28L5BCF
1181600073-01	MK-PVBG2K1540	991-003008-021	RHD28L5BOMDCF
1181600220-01	MK-PVBG2K2140	991-003008-024	RHD28L5BPTFECF
1181600240-01	MK-PVBG2K2240	991-003008-107	RHD28L5BVITCF
1181600260-01	MK-PVBG2KMN40	991-003008-152	RHD28L6BCF
1181601028-01	MK-PVBG2TMN40	991-003008-155	RHD28L6BOMDCF
1181609009-01	MK-PVBG3AMN41	991-003008-164	RHD28L6BVITOMDCF
11816FIL	MK-PVBG3BMN41	991-003009-001	RHD28L71
11816FIL	MK-PVBG3BSN41	991-003009-002	RHD28LCF
1181700014-01	MK-PVBG3CMN41	991-003009-012	RHD28LITL71CF
1181700017-01	MK-PVBG3DMN41	991-003009-014	RHD28LOFEDCF
1181700018-01	MK-PVBG3GMN41	991-003009-015	RHD28LOMD71
1181700050-01	MK-PVBG3JMN41	991-003009-017	RHD28LOMDCF
1181700071-01	MK-PVBG3K0141	991-003009-018	RHD28LOMDVITCF
1181700072-01	MK-PVBG3K0241	991-003009-020	RHD28LVITCF
1181700073-01	MK-PVBG3K0341	991-003009-021	RHD28LVITOMDCF
1181700255-01	MK-PVBG3K1141	991-003009-024	RHD28ZL0.2BCF
1181701051-01	MK-PVBG3K1241	991-003009-152	RHD28ZL0.2BVITCF
1181701070-01	MK-PVBG3K1341	991-003009-155	RHD28ZL0.5BCF
1181701071-01	MK-PVBG3K1441	991-003010-002	RHD28ZL0.5BVITCF
1181701072-01	MK-PVBG3K1541	991-003010-003	RHD28ZL2BCF
1181701073-01	MK-PVBG3K1641	991-003010-005	RHD28ZL3BCF
1181702014-01	MK-PVBG3K1741	991-003010-006	RHD28ZL71
1181702017-01	MK-PVBG3K2141	991-003010-008	RHD28ZLCF
1181702072-01	MK-PVBG3KMN41	991-003010-009	RHD28ZLVITCF
1181709001-01	MK-PVBG3LMN41	991-003010-013	RHD30S0.2BCF
1181709034-01	MK-PVBG3TMN41	991-003010-014	RHD30S0.2BOMDCF
1181709053-01	MK-PVBG4AMN40	991-003010-015	RHD30S0.5BCF
1181709062-01	MK-PVBG4BMN40	991-003010-016	RHD30S0.5BOMDCF
1181709068-01	MK-PVBG4CMN40	991-003010-020	RHD30S0.5BVITCF
1181709070-01	MK-PVBG4CSN40	991-003010-021	RHD30S0.5BVITOMDCF
1181710053-01	MK-PVBG4DMN40	991-003010-027	RHD30S2.5BCF
1181711051-01	MK-PVBG4HMN40	991-003010-032	RHD30S2BOMDCF
1181712017-01	MK-PVBG4JMN40	991-003010-033	RHD30S3BOMDCF

1181712053-01	MK-PVBG4K0140	991-003010-056	RHD30S5BCF
1181721129-01	MK-PVBG4K0240	991-003010-107	RHD30S5BVITCF
1181781075-01	MK-PVBG4K0340	991-003010-152	RHD30S6BCF
1182200071-01	MK-PVBG4K0440	991-003010-155	RHD30S6BOMDCF
1182200072-01	MK-PVBG4K1140	991-003010-189	RHD30S6BVITOMDCF
11823FIL	MK-PVBG4K1340	991-003010-191	RHD30S71
11823FIL	MK-PVBG4K1440	991-003011-001	RHD30SCF
11824FIL	MK-PVBG4K1540	991-003011-003	RHD30SOFED71
11824FIL	MK-PVBG4K1640	991-003011-006	RHD30SOFEDCF
11825FIL	MK-PVBG4K1740	991-003011-007	RHD30SOMD71
11825FIL	MK-PVBG4KMN40	991-003011-009	RHD30SOMDCF
11827FIL	MK-PVBG4LMN40	991-003011-011	RHD30SVITCF
11827FIL	MK-PVBG4TMN40	991-003011-020	RHD30SVITOMDCF
11840FIL	MK-PVBG5AMN40	991-003011-021	RHD30ZS71
11840FIL	MK-PVBG5BMN40	991-003011-070	RHD30ZSCF
11841FIL	MK-PVBG5CMN40	991-003011-163	RHD35L0.2B71
11841FIL	MK-PVBG5CMNX5943	991-003012-001	RHD35L0.2BCF
11843FIL	MK-PVBG5HMN40	991-003012-002	RHD35L0.2BOMDCF
11843FIL	MK-PVBG5JMN40	991-003012-003	RHD35L0.2BVITCF
11844FIL	MK-PVBG5K0140	991-003012-005	RHD35L0.5B71
11844FIL	MK-PVBG5K0240	991-003012-007	RHD35L0.5BCF
11857FIL	MK-PVBG5K0340	991-003012-009	RHD35L0.5BITL71OMDCF
11857FIL	MK-PVBG5K0440	991-003012-011	RHD35L0.5BOMD71
1186-00313	MK-PVBG5K0540	991-003012-013	RHD35L0.5BOMDCF
1186-00313	MK-PVBG5K1140	991-003012-014	RHD35L0.5BVITCF
11866FIL	MK-PVBG5K1340	991-003012-018	RHD35L0.5BVITOMDCF
11866FIL	MK-PVBG5K1540	991-003012-019	RHD35L2.5BCF
11868FIL	MK-PVBG5K1640	991-003012-020	RHD35L2.5BOMDCF
11868FIL	MK-PVBG5K1740	991-003012-029	RHD35L2BCF
11875FIL	MK-PVBG5KMN40	991-003012-031	RHD35L2BOMD71
11875FIL	MK-PVBG5LMN40	991-003012-070	RHD35L2BOMDCF
11876FIL	MK-PVBG5MMN40	991-003012-119	RHD35L2BVITCF
11876FIL	MK-PVBG5TMN40	991-003012-155	RHD35L3BCF
11877FIL	MK-PVCBLN1	991-003012-196	RHD35L3BOMDCF
11877FIL	MK-PVCCKN1	991-003013-001	RHD35L4BOMDCF
11878FIL	MK-TDP063E-10	991-003013-002	RHD35L5BCF
11878FIL	ML2200	991-003013-003	RHD35L5BOMDCF
11880FIL	ML50-180M-N	991-003013-006	RHD35L6BOMDCF
11880FIL	ML50-240M-N	991-003013-008	RHD35L71
11881FIL	ML50-3E-NC-MS	991-003013-009	RHD35LCF
11881FIL	ML50-6E-NC-MS	991-003013-015	RHD35LODIDECKFED71
11882FIL	ML50-8E-NC-MP	991-003013-019	RHD35LODIDECKFEDCF
11882FIL	MLE2200	991-003013-020	RHD35LOMD71
11883FIL	MLT1	991-003013-021	RHD35LOMDCF
11883FIL	MLX-HED-R-10	991-003013-039	RHD35LVITOMDCF
11886FIL	MMCS6A12GG1	991-003013-045	RHD35ZL0.2BCF
11886FIL	MMCS6A12GG1	991-003013-056	RHD35ZL0.5BCF
11887FIL	MMDVA1	991-003013-073	RHD35ZL2.5BCF
11887FIL	MMDVA1	991-003013-101	RHD35ZL2BCF
11888FIL	MMDVA2	991-003014-003	RHD35ZL5BCF
11888FIL	MMDVA2	991-003014-005	RHD35ZL71
11890FIL	MMFS10A00M5	991-003014-011	RHD35ZLCF
11890FIL	MMFS10A00M5	991-003014-013	RHD38S0.2B71

11894FIL	MMFS12A05GM5	991-003014-017	RHD38S0.2BCF
11894FIL	MMFS12A05GM5	991-003014-018	RHD38S0.2BOMDCF
11899FIL	MMFS12A12GG1	991-003014-027	RHD38S0.5BCF
11899FIL	MMFS12A12GG1	991-003014-042	RHD38S0.5BOMDCF
118FIL	MMFS6A05GM5	991-003014-044	RHD38S0.5BVITCF
118FIL	MMFS6A05GM5	991-003014-046	RHD38S2.5BOMDCF
11900FIL	MMFS6A12GG1	991-003014-048	RHD38S2BCF
11900FIL	MMFS6A12GG1	991-003014-052	RHD38S2BOMDCF
1190-1154	MMFS8A00M5	991-003014-058	RHD38S3BCF
11901FIL	MMFS8A00M5	991-003014-093	RHD38S3BOMDCF
11901FIL	MMFS8A05GM5	991-003014-094	RHD38S4BCF
11902FIL	MMFS8A05GM5	991-003014-095	RHD38S5BCF
11902FIL	MMFS8A12GG1	991-003014-151	RHD38S5BOMDCF
11905FIL	MMFS8A12GG1	991-003014-275	RHD38S6BOMDCF
11905FIL	MMFU4A05G	991-003014-365	RHD38S71
11906FIL	MMFU4A05G	991-003014-371	RHD38SCF
11906FIL	MMFU4A12G	991-003014-372	RHD38SOMD2.5BCF
11908FIL	MMFU4A12G	991-003014-377	RHD38SOMD71
11908FIL	MMFU6A05G	991-003014-391	RHD38SOMDCF
11909FIL	MMFU6A05G	991-003014-393	RHD38STN0.5BOMDCF
11909FIL	MMFU6A12G	991-003014-396	RHD38SVITOMDCF
11910FIL	MMFU6A12G	991-003014-406	RHD38ZS0.5BCF
11910FIL	MMFU8A05G	991-003014-419	RHD38ZS71
11912FIL	MMFU8A05G	991-003014-420	RHD38ZSCF
11912FIL	MMFU8A12G	991-003014-421	RHD42L0.2B71
11918FIL	MMFU8A12G	991-003014-534	RHD42L0.2BCF
11918FIL	MOK04LLPRO	991-003014-585	RHD42L0.2BOMDCF
11922FIL	MOK04LLX	991-003014-599	RHD42L0.2BVITCF
11922FIL	MOK05LLPRO	991-003014-613	RHD42L0.5B71
11923FIL	MOK06LLPRO	991-003014-614	RHD42L0.5BCF
11923FIL	MOK06LLPRORW	991-003014-615	RHD42L0.5BOMDCF
11924FIL	MOK06LLX	991-003014-616	RHD42L0.5BVITOMDCF
11924FIL	MOK06LPRO	991-003014-617	RHD42L2.5BCF
11925FIL	MOK06LPRORW	991-003014-618	RHD42L2.5BOMDCF
11925FIL	MOK06LX	991-003014-619	RHD42L2BCF
11926FIL	MOK06SPRO	991-003029-241	RHD42L2BOMD71
11926FIL	MOK06SX	991-003029-242	RHD42L2BOMDCF
11927FIL	MOK08L16.4	991-003030-241	RHD42L3.0BOMDCF
11927FIL	MOK08LLPRO	991-003032-014	RHD42L3B71
119300-01	MOK08LLX	991-003032-387	RHD42L3BCF
11938FIL	MOK08LPRO	991-003035-084	RHD42L3BOMDCF
11938FIL	MOK08LPRORW	991-003038-256	RHD42L3BVITCF
11939FIL	MOK08LX	991-003038-464	RHD42L4BCF
11939FIL	MOK08SPRO	991-003038-613	RHD42L4BOMDCF
11940FIL	MOK08SX	991-003041-028	RHD42L5BCF
11940FIL	MOK10LLPRO	991-003041-059	RHD42L5BOMDCF
11943-12-12-1P	MOK10LLX	991-003041-084	RHD42L6BCF
11943-16-12-1P	MOK10LPRO	991-003041-089	RHD42L6BOMDCF
11943-16-16-1P	MOK10LPRORW	991-003043-222	RHD42L71
11943-20-20C-1P	MOK10LX	991-003044-014	RHD42LCF
11943-8-8-1P	MOK10SPRO	991-003044-281	RHD42LOMD71
11946-12-10	MOK10SX	991-003044-349	RHD42LOMDCF
11946-12-12	MOK12/05	991-003044-464	RHD42LVITCF

11946-12-16	MOK12/07	991-003061-004	RHD42LVITOMDCF
11946-12-8	MOK12/12	991-003061-020	RHD42ZL0.2BCF
11946-16-10	MOK12LLPRO	991-003061-021	RHD42ZL0.2BVITCF
11946-16-12	MOK12LLX	991-003061-022	RHD42ZL0.5BCF
11946-16-16	MOK12LPRO	991-003061-024	RHD42ZL6BCF
11946-20-12	MOK12LPRORW	991-003061-028	RHD42ZL6BVCF
11946-20-16	MOK12LX	991-003061-033	RHD42ZL71
11946-20-20	MOK12SPRO	991-003061-037	RHD42ZLCF
11946-24-16	MOK12SX	991-003061-042	RHD616X2CF
11946-24-20	MOK14SPRO	991-003062-004	RHDI1/20.2B71
11946-8-8	MOK14SX	991-003062-006	RHDI1/20.2BCF
119476-01	MOK15LHP	991-003062-010	RHDI1/20.5B71
11948-12-10	MOK15LPRO	991-003062-018	RHDI1/20.5BCF
11948-12-12	MOK15LPRORW	991-003062-020	RHDI1/20.5BITL71CF
11948-12-16	MOK15LX	991-003062-022	RHDI1/22BCF
11948-12-8	MOK16SX	991-003062-026	RHDI1/23B71
11948-16-10	MOK18LPRO	991-003062-038	RHDI1/23BCF
11948-16-12	MOK18LPRORW	991-003062-040	RHDI1/23BTEF71
11948-16-16	MOK18LX	991-003063-002	RHDI1/23BVITCF
11948-16-20	MOK20SPRO	991-003063-006	RHDI1/25BCF
11948-20-12	MOK20SX	991-003063-008	RHDI1/26BCF
11948-20-16	MOK21/03	991-003063-010	RHDI1/271
11948-20-20	MOK21/04	991-003063-011	RHDI1/2CF
11948-24-16	MOK22LHP	991-003063-012	RHDI1/2OFEDECF
11948-24-20	MOK22LPRO	991-003063-014	RHDI1/2VITCF
11948-24-24	MOK22LPRORW	991-003063-020	RHDI1/40.2B71
11948-24-24C	MOK22LX	991-003063-022	RHDI1/40.2BCF
11948-24-32	MOK25SPRO	991-003063-023	RHDI1/40.5B71
11948-32-20	MOK25SX	991-003063-024	RHDI1/40.5BCF
11948-32-24	MOK28LPRO	991-003063-025	RHDI1/40.5BITL71CF
11948-32-32	MOK28LX	991-003063-026	RHDI1/40.5BTEF71
11948-32-32C	MOK30SPRO	991-003063-028	RHDI1/40.5BVITCF
11948-8-8	MOK30SX	991-003063-030	RHDI1/42B71
11950FIL	MOK35LPRO	991-003063-034	RHDI1/42BCF
11950FIL	MOK35LX	991-003063-038	RHDI1/43B71
11951FIL	MOK38SX	991-003063-040	RHDI1/43BCF
11951FIL	MOK42LPRO	991-003063-046	RHDI1/45BCF
11969FIL	MOK42LX	991-003063-048	RHDI1/46BCF
11969FIL	MOK47/20	991-003065-002	RHDI1/471
11970-10-10-1P	MOK48/20	991-003065-006	RHDI1/4CF
11970-12-10	MOK54/02	991-003065-018	RHDI1/4VITCF
11970-12-12-1P	MOK54/03	991-003065-022	RHDI1/80.5BCF
11970-12-8-1P	MOK54/04	991-003065-024	RHDI1/80.5BPTFECF
11970-16-10	MOK54/05	991-003065-038	RHDI1/82BCF
11970-16-12-1P	MOK54/06	991-003065-040	RHDI1/83BCF
11970-16-16-1P	MOK54/07	991-003066-002	RHDI1/83BVITCF
11970-20-12-1P	MOK54/08	991-003066-008	RHDI1/84BCF
11970-20-16-1P	MOK54/09	991-003066-020	RHDI1/871
11970-8-8-1P	MOK54/10	991-003066-022	RHDI1/8CF
11970FIL	MOK54/11	991-003066-024	RHDI1/8VITCF
11970FIL	MOK54/12	991-003066-028	RHDI10.2B71
11971-12-12-1P	MOK54/14	991-003066-036	RHDI10.2BCF
11971-12-12-1P-SL100	MOK55/01	991-003067-004	RHDI10.2BPTFE71

11971-12-12-1P-SL145	MOK55/02	991-003067-020	RHDI10.5B71
11971-16-12-1P	MOK55/03	991-003067-022	RHDI10.5BCF
11971-16-16-1P	MOK55/04	991-003067-040	RHDI10.5BITL71CF
11971-16-16-1P-SL120	MOK55/05	991-003069-020	RHDI11.5BCF
11971-20-12	MOK55/06	991-003069-024	RHDI11/20.2BCF
11971-20-16-1P	MOK55/07	991-003069-036	RHDI11/20.5BCF
11971-20-20-1P	MOK55/08	991-003071-012	RHDI11/22.5BCF
11971-24-16	MOK55/09	991-003071-026	RHDI11/22BCF
11971-24-20-1P	MOK55/10	991-003071-036	RHDI11/23BCF
11971-24-24-1P	MOK55/11	991-003072-005	RHDI11/25BCF
11971-32-32-1P	MOK55/12	991-003072-020	RHDI11/26BCF
11971-40-32	MOK55/13	991-003073-020	RHDI11/271
11971-8-12-1P-SL100	MOK55/14	991-003073-024	RHDI11/2CF
11971FIL	MOK55/20	991-003073-036	RHDI11/40.2BCF
11971FIL	MOK55/21	991-003074-020	RHDI11/40.5B71
11972FIL	MOK55/24	991-003074-026	RHDI11/40.5BCF
11972FIL	MOK56/02	992-000002-007	RHDI11/42.5BCF
11973-12-12-1P	MOK56/03	9935G	RHDI11/43BCF
11973-16-12	MOK56/04	9950.0.009.1368.0	RHDI11/46BCF
11973-16-16	MOK56/05	995-003000-001	RHDI11/471
11973FIL	MOK56/06	995-003000-002	RHDI11/4CF
11973FIL	MOK56/07	995-003000-003	RHDI11/4VITCF
11974FIL	MOK56/08	995-003000-004	RHDI12.5BCF
11974FIL	MOK56/09	995-003000-005	RHDI12B71
11975FIL	MOK56/10	995-003000-006	RHDI12BCF
11975FIL	MOK56/11	995-003000-007	RHDI13B71
11977-12-12	MOK56/12	995-003000-008	RHDI13BCF
11977-12-8	MOK56/13	995-003000-009	RHDI14BCF
11977-16-12	MOK56/14	995-003000-010	RHDI15BCF
11977-16-16	MOK57/02	995-003000-011	RHDI15BVITCF
11977-8-8	MOK57/03	995-003000-012	RHDI16BCF
11978-12-12-1P	MOK57/04	995-003000-013	RHDI171
11978-16-12	MOK57/05	995-003000-014	RHDI1CF
11978-16-16	MOK57/06	995-003000-015	RHDI1OFEDECF
11979FIL	MOK57/07	995-003000-016	RHDI1VITCF
11979FIL	MOK57/08	995-003000-017	RHDI3/40.2B71
1197FIL	MOK57/09	995-003000-018	RHDI3/40.2BCF
1197FIL	MOK57/10	995-003000-019	RHDI3/40.5B71
11985FIL	MOK57/13	995-003000-020	RHDI3/40.5BCF
11985FIL	MOK59/02	995-003000-021	RHDI3/40.5BITL71CF
11987FIL	MOK59/03	995-003000-022	RHDI3/40.5BVITCF
11987FIL	MOK59/04	995-003000-023	RHDI3/41.5BCF
11991FIL	MOK59/05	995-003000-024	RHDI3/42BCF
11991FIL	MOK59/06	995-003000-025	RHDI3/43B71
11992FIL	MOK59/07	995-003000-026	RHDI3/43BCF
11992FIL	MOK59/08	995-003000-027	RHDI3/44BCF
119FIL	MOK59/09	995-003000-028	RHDI3/45BCF
119FIL	MOK59/11	995-003000-029	RHDI3/46BCF
119FIL	MOK59/12	995-003000-030	RHDI3/471
119FIL	MOK60/02	995-003000-031	RHDI3/4CF
119NX-12-12	MOK60/03	995-003000-032	RHDI3/4OFEDECF
119NX-16-16	MOK60/04	995-003000-033	RHDI3/4VITCF
119NX-20-20	MOK60/05	995-003000-034	RHDI3/80.2B71

11C43-10-4C	MOK60/06	995-003000-035	RHDI3/80.2BCF
11C43-12-5C	MOK60/07	995-003000-036	RHDI3/80.5B71
11C43-12-6	MOK60/08	995-003000-037	RHDI3/80.5BCF
11C43-12-6C	MOK60/09	995-003000-038	RHDI3/82BCF
11C43-14-6	MOK60/10	995-003000-077	RHDI3/83B71
11C43-14-6C	MOK60/11	995-003000-078	RHDI3/83BCF
11C43-16-8	MOK60/12	995-003000-079	RHDI3/83BVITCF
11C43-16-8C	MOK61/02	995-003000-080	RHDI3/85BCF
11C43-20-10	MOK61/03	995-003000-081	RHDI3/871
11C43-20-10C	MOK61/04	995-003000-082	RHDI3/8CF
11C43-20-12	MOK61/05	995-003000-083	RHDI3/8VITCF
11C43-20-12C	MOK61/06	995-003000-084	RHDIO3/871X
11C43-25-10	MOK61/07	995-003000-085	RHDK08L0.2BVITCF
11C43-25-12	MOK61/08	995-003000-086	RHDK10L0.2BVITCF
11C43-25-12C	MOK61/09	995-003000-088	RHDK10L0.5BVITCF
11C43-25-16	MOK61/10	995-003000-089	RHDK10LVITCF
11C43-30-16	MOK62/02	995-003000-090	RHDK18L0.2BVITCF
11C43-30-16C	MOK62/03	995-003000-091	RHDK18L0.5BVITCF
11C43-8-4C	MOK62/04	995-003000-092	RHDK22L0.2BVITCF
11C43-8-6	MOK62/05	995-003000-093	RHDK22L0.5BVITCF
11C46-10-4	MOK62/07	995-003000-094	RHDK28L0.5BVITCF
11C46-10-5	MOK62/08	995-003000-095	RHDO15LCP108518CF
11C46-10-6	MOK62/09	995-003000-096	RHD-R-24-0.5BCF
11C46-12-4	MOK63/02	995-003000-097	RHD-R-32-0.5BCF
11C46-12-5	MOK63/04	995-003000-098	RHD-R-324-0.5BCF
11C46-12-6	MOK63/05	995-003000-099	RHD-R-332-0.5BCF
11C46-14-6	MOK63/06	995-003000-101	RHD-R-332-0.5BSS
11C46-14-8	MOK64/05	995-003000-103	RHD-R-624-0.5BCF
11C46-16-10	MOK64/06	995-003000-104	RHV/RHZ1/8EDVIT.2BV
11C46-16-8	MOK64/07	995-003000-105	RHV06LMED0.5BCF
11C46-20-10	MOK64/09	995-003000-106	RHV06LMED3BVITOMDCF
11C46-20-12	MOK64/10	995-003000-108	RHV06LMED6BOMDCF
11C46-20-8	MOK64/12	995-003000-109	RHV06LMED71
11C46-25-10	MOK65/02	995-003000-110	RHV06LMEDCF
11C46-25-12	MOK65/03	995-003000-111	RHV06LMEDOMD71
11C46-25-16	MOK65/07	995-003000-112	RHV06LMEDOMDCF
11C46-30-16	MOK65/08	995-003000-113	RHV06LMEDVITOMDCF
11C46-38-20	MOK65/10	995-003000-114	RHV06LRED0.2BCF
11C46-6-4	MOKEO206L	995-003000-115	RHV06LRED0.2BOMDCF
11C46-8-4	MOKEO206S	9-9-9 JBMP7-SS	RHV06LRED0.5BCF
11C48-10-4	MOKEO208L	999-010300	RHV06LRED0.5BVITCF
11C48-10-4C	MOKEO208LPRO	99KLIM30EKX12	RHV06LRED2BOMDCF
11C48-10-5	MOKEO208S	99KLIM30EKX15	RHV06LRED3BOMD71
11C48-10-6	MOKEO210L	99KLIM30EKX30	RHV06LRED5BCF
11C48-12-4	MOKEO210LPRO	99KLIM30EKX45	RHV06LRED6BCF
11C48-12-5	MOKEO210S	99KLIM30EKX60	RHV06LREDCF
11C48-12-5C	MOKEO212L	99KLIM30EKX75	RHV06LREDOMD71
11C48-12-6	MOKEO212LPRO	99KLIM30EKX90	RHV06LREDOMDCF
11C48-12-6C	MOKEO212S	99SLIM30EKX15	RHV06LREDOMDLUFTCF
11C48-14-6	MOKEO214S	99SLIM30EKX30	RHV06LREDVITCF
11C48-14-8	MOKEO215L	99SLIM30EKX45	RHV06SMEDCF
11C48-16-10	MOKEO215LPRO	99SLIM30EKX60	RHV06SMEDOMDCF
11C48-16-8	MOKEO216S	99SLIM30EKX75	RHV06SRED0.2BOMDCF

11C48-16-8C	MOKEO218L	99SLIM30EKX90	RHV06SRED0.5BCF
11C48-20-10	MOKEO218LPRO	9BACP1200S5B	RHV06SRED4BCF
11C48-20-10C	MOKEO220S	9C1200B	RHV06SRED71
11C48-20-12	MOKEO220SPRO	9C1200B65	RHV06SREDCF
11C48-20-12C	MOKEO222L	9C1200S	RHV06SREDOMD71
11C48-25-10	MOKEO222LPRO	9C1200S20	RHV06SREDOMDCF
11C48-25-12	MOKEO225S	9C1200S65	RHV06SREDV0.5ITL71CF
11C48-25-12C	MOKEO225SPRO	9C1200S80	RHV06ZLMEDCF
11C48-25-16	MOKEO228L	9C1200SV	RHV06ZLRED0.2BCF
11C48-30-16	MOKEO228LPRO	9C1600B	RHV06ZLREDCF
11C48-30-16C	MOKEO230S	9C1600B65	RHV06ZSREDCF
11C48-38-20	MOKEO230SPRO	9C1600S	RHV08LMED0.2BOMDCF
11C48-38-20C	MOKEO235L	9C1600S20	RHV08LMED5BOMDCF
11C48-6-4	MOKEO238S	9C1600S65	RHV08LMEDCF
11C48-8-4	MOKEO242L	9C2000S	RHV08LMEDOMD71
11C48-8-4C	MORS10	9C2000S20	RHV08LMEDOMDCF
11C55-12-5	MOSI04LLX	9C2000S65	RHV08LRED0.2B71
11C55-12-6	MOSI06LLX	9C200B	RHV08LRED0.2BCF
11C55-16-8	MOSI06LX	9C200B65	RHV08LRED0.2BOMDCF
11C56-10-4	MOSI06SX	9C200S	RHV08LRED0.5BCF
11C56-10-4C	MOSI08LLX	9C200S65	RHV08LRED0.5BOMDCF
11C56-12-5	MOSI08LX	9C200SV	RHV08LRED2BCF
11C56-12-6	MOSI08SX	9C2400S	RHV08LRED3BOMDCF
11C56-12-6C	MOSI10LLX	9C2400S20	RHV08LRED4BCF
11C56-16-8	MOSI10LX	9C2400S65	RHV08LRED6BCF
11C56-8-3	MOSI10SX	9C400B	RHV08LRED71
11C58-16-8	MOSI12LLX	9C400S	RHV08LREDCF
11C58-20-10	MOSI12LX	9C400S20	RHV08LREDOMD71
11C58-25-12	MOSI12SX	9C400S65	RHV08LREDOMDCF
11C70-12-6	MOSI14SX	9C400SV	RHV08LREDVITCF
11C70-12-6C	MOSI15LX	9C600B	RHV08SMED71
11C70-14-6	MOSI16SX	9C600B65	RHV08SMEDCF
11C70-14-6C	MOSI18LX	9C600BV	RHV08SMEDOMDCF
11C70-16-10	MP-0272C	9C600S	RHV08SRED0.2BOMDCF
11C70-16-8	MP4-40/S60440	9C600S20	RHV08SRED3BITL71CF
11C70-16-8C	MP4-40/S60440	9C600S40	RHV08SRED6BOMDCF
11C70-20-10	MP4-50/S60441	9C600S65	RHV08SRED71
11C70-20-10C	MP4-50/S60441	9C600S80	RHV08SREDCF
11C70-20-12	MPC02/06/025	9C600SV	RHV08SREDOMD71
11C70-20-12C	MPC02/06/060	9C800B	RHV08SREDOMDCF
11C70-20-8	MPC02/06/075	9C800B65	RHV08SREDVITLUFTCF
11C70-25-10	MPC02/08/025	9C800BV	RHV08ZLMEDCF
11C70-25-12	MPC02/08/060	9C800S	RHV08ZLRED0.2B71
11C70-25-12C	MPC02/08/075	9C800S20	RHV08ZLRED0.2BCF
11C70-25-16	MPC04/06/025	9C800S65	RHV08ZLRED71
11C70-30-12	MPC04/06/060	9C800SV	RHV08ZLREDCF
11C70-30-16	MPC04/06/075	9CP1200S40M	RHV08ZSMEDCF
11C70-30-16C	MPC04/08/025	9CP1200S5M	RHV08ZSRED0.2BCF
11C70-8-6	MPC04/08/060	9CP600S40M	RHV08ZSREDCF
11C71-12-8	MPC04/08/075	9CP600S5M	RHV08ZSREDVITCF
11C71-16-8	MPC1140X-117689	9D600S	RHV10LMED0.5BOMDCF
11C71-20-10	MPI GAP GAUGE	9D600SNC	RHV10LMED71
11C71-20-12	MPL4400	9DC600SNC	RHV10LMEDCF

11C71-25-12	MPM#12209N	9DF600S	RHV10LMEDOMD71
11C71-30-16	MPM661-1803	9DN600S	RHV10LMEDOMDCF
11C71-38-20	MPM662-2247	9ECR1200S10	RHV10LMEDVITCF
11C73-20-12	MPS02/06/025	9ECR1200S6	RHV10LRED0.2B71
11C73-25-12	MPS02/08/025	9ECR800S8	RHV10LRED0.2BCF
11C73-25-12SW41	MPS04/06/025	9F1200B	RHV10LRED0.2BOMDCF
11C73-25-16	MPS04/08/025	9F1200BV	RHV10LRED0.5B71
11C73-30-16	MPS-71E-PG	9F1200S	RHV10LRED0.5BCF
11C73-30-20	MPS-71E-PG	9F1200SF	RHV10LRED0.5BOMD71
11C73-38-20	MPS-ACCH5	9F1200SV	RHV10LRED0.5BOMDCF
11C77-16-10	MPS-ACCH5	9F1600B	RHV10LRED05BVIT71CF
11C77-16-8	MPS-ACCH7	9F1600S	RHV10LRED2BCF
11C77-20-10	MPS-ACCH7	9F1600SF	RHV10LRED3BCF
11C77-20-12	MPS-ACCK8	9F1600SV	RHV10LRED71
11C77-25-12	MPS-ACCK8	9F2000S	RHV10LREDCF
11C77-25-16	MPS-P1E-NC	9F2000SF	RHV10LREDITL71CF
11C77-30-16	MPS-P1E-NC	9F2000SFV	RHV10LREDLUFTOMDCF
11C77-38-20	MPS-P2G-NC	9F200B	RHV10LREDOFEDEOMDCF
11C78-20-12	MPS-P2G-NC	9F200B4	RHV10LREDOMD71
11C78-25-12	MPS-P33G-PGAT	9F200B4F	RHV10LREDOMDCF
11C78-30-16	MPS-P33G-PGAT	9F200BF	RHV10LREDVITCF
11C78-38-20	MPS-P34G-PCI	9F200BV	RHV10SMED71
11C79-25-12	MPS-P34G-PCI	9F200S	RHV10SMEDCF
11C79-30-16	MPS-P6T-PG	9F200S4	RHV10SMEDOMD71
11C79-38-20	MPS-P6T-PG	9F200SF	RHV10SMEDOMDCF
11C8X-10-04	MPS-R8U-AG	9F200SV	RHV10SRED0.2BOMDCF
11C8X-12-05	MPS-R8U-AG	9F2400S	RHV10SRED2BCF
11C8X-14-06	MPS-V1E-NC	9F2400SF	RHV10SRED4BOMDCF
11C8X-16-08	MPS-V1E-NC	9F2400SV	RHV10SRED71
11C8X-8-04	MPS-V1E-PC3	9F400B	RHV10SREDCF
11C9X-12-06	MPS-V1E-PC3	9F400BF	RHV10SREDITL71CF
11C9X-14-06	MPS-V1G-NC	9F400BFV	RHV10SREDOMD71
11CNX-10-04	MPS-V1G-NC	9F400BV	RHV10SREDOMDCF
11CNX-12-05	MPS-V23C-PC	9F400S	RHV10ZLMED0.2B71
11CNX-12-05-6V	MPS-V23C-PC	9F400S4	RHV10ZLMEDCF
11CNX-14-06	MPS-V2G-NC	9F400S4F	RHV10ZLRED0.2BCF
11CNX-16-08	MPS-V2G-NC	9F400S4FV	RHV10ZLREDCF
11CNX-20-10	MPS-V33G-PGAT	9F400S4V	RHV10ZSMED71
11CNX-25-12	MPS-V33G-PGAT	9F400S6	RHV10ZSREDCF
11CNX-30-16	MPS-V34G-PCI	9F400SF	RHV125SREDCF
11CNX-38-20	MPS-V34G-PCI	9F400SS	RHV12LMED0.2BVITCF
11CPC-10-04	MPS-V3G-NC	9F400SV	RHV12LMED0.2BVOMDCF
11CPC-12-05	MPS-V3G-NC	9F600B	RHV12LMED0.5BVITCF
11CPC-16-08	MPS-V6C-PC	9F600BFV	RHV12LMED5BOMDCF
11CPC-6-04	MPS-V6C-PC	9F600BV	RHV12LMEDCF
11CPX-10-04	MPS-V6G-PC	9F600S	RHV12LMEDOMD71
11CPX-12-05	MPS-V6G-PC	9F600S4	RHV12LMEDOMDCF
11CPX-14-06	MPS-V6T-AGE	9F600S4F	RHV12LMEDVITOMDCF
11CPX-16-08	MPS-V6T-AGE	9F600S4FV	RHV12LRED0.2BCF
11CPX-6-04	MPS-V8T-PG	9F600SF	RHV12LRED0.2BOMD71
11CPX-8-03	MPS-V8T-PG	9F600SFV	RHV12LRED0.2BOMDCF
11CPX-8-04	MPS-V8U-AG	9F600SS	RHV12LRED0.5B71
11CPX-8-04-6V	MPS-V8U-AG	9F600ST	RHV12LRED0.5BCF

11CRX-10-04	MPS-V9M-PGA	9F600SV	RHV12LRED0.5BD71MS
11CYX-12-05	MPS-V9M-PGA	9F800B	RHV12LRED0.5BOMDCF
11D54-12-6	MPZ-06S-A+B-B02	9F800BF	RHV12LRED2BOMDCF
11D54-6-4	MR23842	9F800BFV	RHV12LRED3BCF
11D54-8-4	MRK60VM607	9F800BV	RHV12LRED3BVITOMDCF
11D55-10-5	MRP-95-722	9F800S	RHV12LRED5BOMDCF
11D55-10-5C	MRP-95-722	9F800SF	RHV12LRED71
11D55-10-6	MRP-95-742	9F800SFV	RHV12LREDCF
11D55-12-6	MRP-95-742	9F800SS	RHV12LREDOFEOMDCF
11D55-12-6C	MRP-95-938	9F800SV	RHV12LREDOMD71
11D55-15-8	MRP-95-938	9GF400S	RHV12LREDOMDCF
11D55-18-12	MRP-95-939	9GT400S	RHV12LREDVITCF
11D55-22-12	MRP-95-939	9GT400SV	RHV12SMEDCF
11D55-6-2	MRP-95-940	9MP7-MPBLPKH-V-SSP	RHV12SMEDOMD71
11D55-6-3	MRP-95-940	9MP7-MPCBL-5-SS	RHV12SMEDOMDCF
11D55-6-4	MRP-95-941	9MP7-MPCL-5-V-SS	RHV12SRED0.5BCF
11D55-8-4	MRP-95-941	9MV1200S	RHV12SRED0.5VITL71CF
11D56-10-5	MRP-96-300	9MV1200SV	RHV12SRED2BCF
11D56-10-6	MRP-96-300	9MV1261S	RHV12SRED3BOMDCF
11D56-12-6	MRP-96-415	9MV1261SV	RHV12SRED71
11D56-15-8	MRP-96-415	9MV1600S	RHV12SREDCF
11D56-6-3	MS0200N	9MV1600SV	RHV12SREDLUFTCF
11D56-6-3C	MS0300N	9MV200B3	RHV12SREDOMD71
11D56-6-4	MS0400N	9MV200B3V	RHV12SREDOMDCF
11D56-8-4	MS0500N	9MV200S	RHV12SREDVITCF
11D58-12-6	MS0600N	9MV200S2	RHV12ZLMEDCF
11D58-15-8	MS0700N	9MV200S2V	RHV12ZLRED0.2BCF
11D58-18-12	MS0800N	9MV200S3	RHV12ZLRED71
11D58-6-2	MS0900N	9MV200SE	RHV12ZLREDCF
11D91N-10-6	MS1000N	9MV200SV	RHV12ZSMED71
11D91N-10-8	MS1100N	9MV261S	RHV12ZSRED71
11D91N-10-8C	MS1200N	9MV261S3	RHV12ZSREDCF
11D91N-12-10C	MS1503	9MV400B	RHV14SMED71
11D91N-12-8	MS1503	9MV400B2V	RHV14SMEDCF
11D91N-12-8C	MS1504	9MV400B3	RHV14SMEDOMDCF
11D91N-15-10	MS15-051	9MV400BV	RHV14SREDCF
11D91N-15-10C	MS15-052	9MV400S	RHV14SREDOMD71
11D91N-18-10	MS15-055	9MV400S2	RHV14SREDOMDCF
11D91N-18-10C	MS15-056	9MV400S2V	RHV14ZSREDCF
11D91N-18-12	MS15-062	9MV400S3	RHV15LMED0.2BOMDCF
11D91N-18-12C	MS15-065	9MV400SV	RHV15LMED0.2BVITCF
11D91N-22-16	MS15-069	9MV461S	RHV15LMED0.5BCF
11D91N-22-16C	MS15-070	9MV461S2	RHV15LMED0.5BOMDCF
11D91N-6-4	MS15-081	9MV461S2V	RHV15LMED0.5BVITCF
11D91N-6-4C	MS15-082	9MV461S2X5345	RHV15LMEDCF
11D91N-6-5	MS15-083	9MV461S3	RHV15LMEDOMD71
11D91N-6-5C	MS15-084	9MV461SE	RHV15LMEDOMDCF
11D91N-8-5	MS15-085	9MV461SV	RHV15LRED0.2BCF
11D91N-8-5C	MS15-087	9MV600B2	RHV15LRED0.2BOMDCF
11D91N-8-6	MS15-087ESR42	9MV600S	RHV15LRED0.5B71
11D91N-8-6C	MS15-090	9MV600S2	RHV15LRED0.5BCF
11DEX-4-012	MS15-090ESR4210	9MV600S2V	RHV15LRED0.5BOMDCF
11DEX-4-025	MS15-092	9MV600S3	RHV15LRED3BCF

11DEX-6-025	MS15-093	9MV600SV	RHV15LRED3BOMDCF
11DPC-10-05	MS15-095	9MV661S	RHV15LRED5BCF
11DPC-12-06	MS15-096	9MV661SV	RHV15LRED6BOMDCF
11DPC-18-10	MS15-097	9MV800B	RHV15LRED71
11DPC-8-04	MS15-098	9MV800BV	RHV15LREDCF
11DPX-10-05	MS15-099	9MV800S	RHV15LREDOMD71
11DPX-10-06	MS15-155	9MV800SE	RHV15LREDOMDCF
11DPX-12-06	MS15-158	9MV800SV	RHV15LREDVITOMDCF
11DPX-15-08	MS15-162	9MV861S	RHV15ZLMED3BCF
11DPX-18-10	MS15-165	9MV861SV	RHV15ZLMEDCF
11DPX-6-03	MS15-166	9N1200B	RHV15ZLRED0.2BCF
11DPX-6-03C2	MS15-182	9N1200BE	RHV15ZLRED0.5BCF
11DPX-6-04	MS15-182ESR4210	9N1200BF	RHV15ZLREDCF
11DPX-8-04	MS15-182ESR4225	9N1200BFV	RHV16SMED2BCF
11DYX-10-05	MS15-183	9N1200BV	RHV16SMEDCF
11DYX-12-06	MS15-183ESR4210	9N1200S	RHV16SMEDOMD71
11DYX-15-08	MS15-184	9N1200SE	RHV16SMEDOMDCF
11DYX-28-16	MS15-185	9N1200SF	RHV16SRED0.2BCF
11DYX-6-03	MS15-185ESR4220	9N1200SFV	RHV16SRED0.2BOMDCF
11DYX-6-04	MS15-187	9N1200SV	RHV16SRED0.2BVITCF
11DYX-8-04	MS15-192	9N1600B	RHV16SRED0.5B71
11KBAH16MVX	MS15-193	9N1600BF	RHV16SRED0.5BCF
11KBAM16MVX	MS15-194	9N1600BV	RHV16SRED2BOMDCF
11KBAM16MVXSL	MS15-199	9N1600S	RHV16SRED3BCF
11KBAR16MVX	MS15-200	9N1600SF	RHV16SRED4BCF
11KBAW13MVX	MS15-201	9N1600SFV	RHV16SRED5BOMDCF
11KBAW17MVX	MS15-202	9N1600SV	RHV16SRED6BCF
11KBAW17MVXSL	MS15-203	9N2000S	RHV16SRED71
11KBAW21MVX	MS15-204	9N200B	RHV16SREDCF
11KBIM16MVX	MS15-205	9N200B4	RHV16SREDLUFT71
11KBIW13MVX	MS15-208	9N200BF	RHV16SREDOMD71
11KBIW17MVX	MS15-209	9N200BFV	RHV16SREDOMDCF
11KBPH13MVX	MS15-210	9N200BV	RHV16SREDVITCF
11KBPR13MVX	MS15-211	9N200S	RHV16ZSRED0.2BCF
11KBTF13MVX	MS15-251	9N200S4	RHV16ZSREDCF
11KBTF13MVXSL	MS15-252	9N200S4F	RHV18LMED0.2BVITCF
11KBTH13MVX	MS15-253	9N200S4FV	RHV18LMED0.5BCF
11KBTH13MVXSL	MS15-254	9N200SF	RHV18LMED0.5BOMDCF
11KBTP10MVX	MS15-500	9N200SFV	RHV18LMED2BCF
11KBTP13MVX	MS15-501	9N200SV	RHV18LMED2BOMDCF
11KBTR13MVX	MS15-502	9N400B	RHV18LMED3BOMDCF
11KBTR13MVXSL	MS15-503	9N400B4F	RHV18LMED71
11KBUK125MVX	MS15-504	9N400BE	RHV18LMEDCF
11KFAH16MVX	MS2202110	9N400BF	RHV18LMEDOMDCF
11KFAM16MVX	MS2202210	9N400BV	RHV18LRED0.2BCF
11KFAM16MVXSL	MS2204110	9N400S	RHV18LRED0.2BOMD71
11KFAR16MVX	MS24/25	9N400S4	RHV18LRED0.2BOMDCF
11KFAW17MVX	MS24/25S	9N400S4F	RHV18LRED0.5B71
11KFAW17MVXSL	MS3204121	9N400S4FV	RHV18LRED0.5BCF
11KFAW21MVX	MS43700A	9N400SF	RHV18LRED0.5BITL71V
11KFIM16MVX	MS43700A	9N400SFV	RHV18LRED0.5BOMD71
11KFIW13MVX	MS43701A	9N400SV	RHV18LRED0.5BOMDCF
11KFIW17MVX	MS43701A	9N600B	RHV18LRED0.5BVITOMDCF

11KFTF13MVX	MS6-01	9N600B4FV	RHV18LRED2BCF
11KFTF13MVXSL	MS6-01	9N600BF	RHV18LRED2BOMDCF
11KFTH13MVX	MSC.3100	9N600BFV	RHV18LRED2BVITCF
11KFTH13MVXSL	MSD-97-090	9N600BV	RHV18LRED3BCF
11KFTR13MVX	MSD-97-090	9N600S	RHV18LRED3BOMDCF
11KFTR13MVXSL	MSD-97-093	9N600S4	RHV18LRED5BOMDCF
11KFUK125MVX	MSD-97-093	9N600S4F	RHV18LRED6BCF
11KFUK500MVX	MSD-97-096	9N600SF	RHV18LRED6BOMDCF
11-P-151	MSD-97-096	9N600SV	RHV18LRED71
11SBAM16MVX	MSD-97-098	9N800B	RHV18LREDCF
11SBAW13MVN	MSD-97-098	9N800BE	RHV18LREDOMD71
11SBAW17MVN	MSD-97-099	9N800BF	RHV18LREDOMDCF
11SFAM14MXX	MSD-97-099	9N800BFV	RHV18LREDVITOMDCF
11SFAM16MXX	MSD-C3-KA1D	9N800BV	RHV18ZLRED0.2B71
11SFAR13MXN	MSD-C3-KA1D	9N800S	RHV18ZLRED0.2BCF
11SFAR14MXX	MSD-C3-KA1E	9N800SF	RHV18ZLRED0.5BCF
11SFAR17MXN	MSD-C3-KA1E	9N800SFV	RHV18ZLREDCF
11SFAW10MXN	MSD-C3-KA2D	9N800SS	RHV18ZLREDVITCF
11SFAW13MXN	MSD-C3-KA2D	9N800SSXB262	RHV20SMED0.5BCF
11SFAW13RXX	MSD-C3-KA2E	9N800SV	RHV20SMED2BCF
11SFAW17MXN	MSD-C3-KA2E	9-P-28	RHV20SMEDCF
11SFAW17RXX	MSD-C3-KB1D	9-P-37	RHV20SMEDOMDCF
11SFIW13MXN	MSD-C3-KB1D	9-P-54	RHV20SRED0.2BCF
11SFTF09MXX	MSD-C3-KB1E	9-P-55	RHV20SRED0.2BOMDCF
11SFTF13MXX	MSD-C3-KB1E	9-P-79	RHV20SRED0.5BOMDCF
11VN1310MXX	MSD-C3-KB2D	9-P-80	RHV20SRED2BCF
11VN1710MXX	MSD-C3-KB2D	9-P-91	RHV20SRED3BCF
11VNXX15MXX	MSD-C4-CB2D	9-P-92X	RHV20SRED5BOMDCF
11VNXX30MXX	MSD-C4-CB2D	9PCCM1200S	RHV20SRED6BOMDCF
11VNXX45MXX	MSD-C4-KA1D	9PCCM1200SF	RHV20SRED71
12 AOEL6-S	MSD-C4-KA1D	9PCCM1200ST	RHV20SREDCF
12 AOG5JG5-S	MSD-C4-KB1D	9PCCM1600S	RHV20SREDOMD71
12 BL-S	MSD-C4-KB1D	9PCCM1600SFV	RHV20SREDOMDCF
12 BL-SS	MSE.3100	9PCCM1600SV	RHV20SREDVITCF
12 BODY DIE	MSE.3200	9PCCM400S	RHV20ZSMED71
12 BTX-B	MSL-02	9PCCM400SF	RHV20ZSRED71
12 BTX-S	MSL-02	9PCCM400SV	RHV20ZSREDCF
12 BTX-SS	MSM-01	9PCCM600S	RHV22LMED71
12 BU-S	MSM-01	9PCCM600SF	RHV22LMEDCF
12 BU-SS	MSP1D23B910	9PCCM600SFV	RHV22LMEDOMDCF
12 BZ-SS	MSP1D23BA910	9PCCM600SV	RHV22LRED0.2B71
12 C5OLO-S	MSP1D23BA910C	9PCCM800S	RHV22LRED0.2BCF
12 C5OX-S	MSP1D34B930	9PCCM800SF	RHV22LRED0.2BOMDCF
12 C6BU-S	MSP1D34B930C	9PCCM800SFV	RHV22LRED0.5BCF
12 C6LO-S	MSP1D34BA930	9PCCM800SV	RHV22LRED0.5BITL71CF
12 C6X-B	MSP1D34BA930C	9PCK400S-0.25	RHV22LRED0.5BOMDCF
12 C6X-S	MSP2D23B910	9PCK400S-0.50	RHV22LRED2BCF
12 CBU-S	MSP2D23B910C	9PCK400S-0.75	RHV22LRED2BOMDCF
1-2 CBZ-B	MSP2D23B910P12	9PCM1200S	RHV22LRED3BCF
1-2 CBZ-SS	MSP2D23BA910	9PCM1200SF	RHV22LRED5BOMDCF
12 CC5BU-S	MSP2D23BA910C	9PCM1200SV	RHV22LRED6BOMDCF
12 CC5OX-S	MSP2D34B930	9PCM1600S	RHV22LRED71
12 CCCTX-S	MSP2D34B930C	9PCM1600SF	RHV22LREDCF

12 CCTX-S	MSP2D34B930P12	9PCM400S	RHV22LREDITL71CF
12 CLO-S	MSP2D34BA930	9PCM400SF	RHV22LREDOMDCF
12 CP-SS	MSP2D34BA930C	9PCM600S	RHV22LREDVITCF
12 CTX-B	MSP2D34BA930P12	9PCM600SF	RHV22LREDVITOMDCF
12 CTX-S	MSP3D23B910	9PCM600ST	RHV22ZLRED0.2BCF
12 DTX-S	MSP3D23B910C	9PCM600SV	RHV22ZLRED0.5BCF
12 DTX-SS	MSP3D23BA910	9PCM800S	RHV22ZLRED2BCF
12 EBU-S	MSP3D23BA910C	9PCM800SF	RHV22ZLRED71
12 ELO-S	MSP3D23BA910P12	9PCM800SV	RHV22ZLREDCF
12 ETX-S	MSP3D34B930	9PR400SH	RHV25SMED0.5BCF
12 EW-SS	MSP3D34B930C	9PR400SM	RHV25SMED0.5BOMDCF
12 F5BU-S	MSP3D34B930CP12	9PR600SF	RHV25SMED71
12 F5OHAO-S	MSP3D34BA930	9PR600SH	RHV25SMEDCF
12 F5OLO-S V0894	MSP3D34BA930C	9PR600SM	RHV25SMEDOMDCF
12 F5OX-S	MSP3D34BA930CP12	9PR800SH	RHV25SRED0.2BCF
12 F65OL-S	MSP4D23B910	9RA1200S1	RHV25SRED0.2BOMDCF
12 F65OX-S	MSP4D23B910C	9RA600S1	RHV25SRED0.5BCF
12 F6X-S	MSP4D23BA910	9RA600S2	RHV25SRED0.5BITL71CF
12 FBU-S	MSP4D23BA910C	9RA600S4	RHV25SRED0.5BOMDCF
1-2 FBZ7-SS	MSP4D34B930	9RA600S5	RHV25SRED2BOMDCF
1-2 FBZ-B	MSP4D34B930C	9RCP400SFV	RHV25SRED3BCF
1-2 FBZ-SS	MSP4D34BA930	9RCP400SH	RHV25SRED3BOMDCF
12 FF5OLO-S	MSP4D34BA930C	9RCP400SM	RHV25SRED5BOMDCF
12 FF5OX-S	MSP5D23B910	9RP400SH	RHV25SRED71
12 FF5OX-SS	MSP5D23B910C	9RP400SM	RHV25SREDCF
1-2 FH4BZ-SS	MSP5D23BA910	9RP600SH	RHV25SREDOMD71
12 FLO-S	MSP5D23BA910C	A.2511001	RHV25SREDOMDCF
12 FLO-SS	MSP5D23BA910CP23	A.2521001	RHV25SREDVITCF
1-2 FLZ7-SS	MSP5D34B930	A.2521002	RHV25SREDVITOMDCF
12 FNLBA-S	MSP5D34B930C	A.2521003	RHV25ZSMEDCF
12 FNL-S	MSP5D34BA930	A.613 111 310	RHV25ZSREDCF
12 FNTX-B	MSP5D34BA930C	A/BSAQ040HM001	RHV28LMED0.2BCF
12 FNTX-S	MSP6D23B910	A/BSAQ050HM0CS12819	RHV28LMED0.2BOMDCF
12 FNTX-SS	MSP6D23B910C	A/BSAQ100HM001	RHV28LMED1.5BOMDCF
12 FNU-S	MSP6D23BA910	A/CB040HM001CS12274	RHV28LMED2BCF
12 FNZ-SS	MSP6D23BA910C	A/KS203L001	RHV28LMEDCF
12 FTX-B	MSP6D23BA910P45	A/PF050MMB01	RHV28LMEDOMDCF
12 FTX-S	MSP6D23BA910T45	A/PF2063MMA1CS18092D	RHV28LRED0.2B71
12 FW-SS	MSP6D34B930	A/PF2125MMA01CS18909	RHV28LRED0.2BCF
12 FX-SS	MSP6D34B930C	A/PF2420MMA1CS14290	RHV28LRED0.2BOMDCF
12 G6X-S	MSP6D34BA930	A/PFQ050HM001	RHV28LRED0.5BCF
12 GAP GAUGE	MSP6D34BA930C	A/PFS050HM00CS13644E	RHV28LRED0.5BITL71VCF
12 GBU-S	MSP7D23B910	A/PK063MB1CS19667	RHV28LRED0.5BOMDCF
1-2 GBZ-SS	MSP7D23BA910	A/PK125MB1CS19613	RHV28LRED2.5BCF
12 GTX-S	MSP7D23BA910C	A/PKB032HM001	RHV28LRED2BOMDCF
12 GW-SS	MSP7D34B930	A/PKB040HM001	RHV28LRED3B71
12 HBU-S	MSP7D34BA930	A/PKB050HM001	RHV28LRED3BCF
12 HL6-S	MSP-7NA0-P	A/PKB063HM001	RHV28LRED3BOMDCF
12 HLO-S	MSP8D23B910	A/PKB152HLL01	RHV28LRED4BOMDCF
12 HP5ON-S	MSP8D23B910C	A/PKB202HLL01	RHV28LRED5BOMDCF
12 HP5ON-S V0894	MSP8D23BA910	A/PLL360MMA1CS17217	RHV28LRED6BCF
12 HP5ON-S V0894 NO CAP	MSP8D23BA910C	A/PN040MMB02-S	RHV28LRED71
12 HP5ON-SS	MSP8D23BA910P56	A/PN050MMB02-S	RHV28LREDCF

12 HTX-S	MSP8D34B930	A/PN063MMB02-S	RHV28LREDOMD71
12 HW-SS	MSP8D34BA930	A/PN080MMB02-S	RHV28LREDOMDCF
12 HX6-S	MSP8D34BA930C	A/PN250HM01CS15780D	RHV28LREDVITOMDCF
12 JBU-S	MSP-95-500	A/RG2HM0182CS118812	RHV28ZLRED0.2BCF
12 JLO-S	MSP-95-500	A/RGF05MMB0281	RHV28ZLRED0.5BCF
12 JTX-B	MSP-95-502	A/RGFD206MMA1CS19241	RHV28ZLRED71
12 JW-SS	MSP-95-502	A/RGJD2HMF05CS12007D	RHV28ZLREDCF
12 JX6-S	MSP-95-503	A/RGLLMMA2201CS17217	RHV30SMED0.2BOMDCF
12 KBU-S	MSP-95-503	A/RGLS2HMF03CS13644B	RHV30SMED2.5BOMDCF
12 KBZ-SS	MSP-95-556	A/RGS2HM0281CS12195B	RHV30SMED2BOMDCF
12 KLO-S	MSP-95-556	A/RGS2HM0281CS14657	RHV30SMEDOMDCF
12 KTX-S	MSP-95-873	A/RK04MMB0222-S	RHV30SRED0.2BCF
12 KTX-SS	MSP-95-873	A/RK04MMB0282-S	RHV30SRED0.2BOMDCF
12 LHBU-S	MSP-95-875	A/RK05MMB0362-S	RHV30SRED0.2BVITCF
12 LHQ1-S	MSP-95-875	A/RK06MMB0362-S	RHV30SRED0.5BCF
12 LHQ2-S	MSP-95-988	A/RK08MMB0562-S	RHV30SRED2BOMDCF
12 LOHB3-S	MSP-95-988	A/RK2HM1401CS15780B	RHV30SRED3BCF
12 LOHQ1-S	MSP-95-989	A/RKF2MMA0901CS18909	RHV30SRED5BOMDCF
12 LOHQ2-S	MSP-95-989	A/RKF2MMA2501CS14290	RHV30SRED71
12 LOHX6-S	MSP-95-990	A/RKLL08MAS561	RHV30SREDCF
12 LOVQ1-S	MSP-95-990	A/RKN10MMA07CS12302B	RHV30SREDOMD71
12 LOVQ2-S	MSP-95-992	A/RKNMMA451CS17230L	RHV30SREDOMDCF
12 LVQ1-S	MSP-95-992	A00SBP	RHV30ZSMED71
12 LVQ2-S	MSP-95-993	A00SBP	RHV30ZSREDCF
12 MBU-S	MSP-95-993	A00SC231P	RHV35LMED2.5BOMDCF
12 MTX-S	MSP-96-649	A00SC231P	RHV35LMEDCF
12 MTX-SS	MSP-96-649	A00SC23-1P-E	RHV35LMEDOMDCF
12 NUT DIE	MSP-96-732	A00SC23-1P-E	RHV35LRED0.2BCF
12 OBU-S	MSP-96-732	A00SC23-1P-M3-E	RHV35LRED0.2BOMDCF
12 OTX-S	MSS-01	A00SC23-1P-M3-E	RHV35LRED0.5B71
12 P5ON-S	MSS-01	A00SC23-1S	RHV35LRED0.5BCF
12 P5ON-S V0894	MSV2306-RA-01	A00SC23-1S	RHV35LRED0.5BOMDCF
12 PH-6MO	MSV2306-RA-01	A00SO23-1P-E	RHV35LRED2BCF
12 PH-B	MSV2406-VA-02	A00SO23-1P-E	RHV35LRED3BCF
12 PHH-SS	MSV2406-VA-02	A00SO23J-1S-E	RHV35LRED3BOMDCF
12 PH-M	MT1110	A00SO23J-1S-E	RHV35LRED4BCF
12 PH-SS	MT2220	A02A2HZN	RHV35LRED5BOMDCF
12 PH-SSHP	MTE1110	A02A2PZN	RHV35LRED71
12 PNBZ-SS	MTE2220	A02B2-17.0N	RHV35LREDCF
12 PNLOBA-S	MTF12ROMDCF	A02B2FZ10-80N	RHV35LREDOMD71
12 PNLO-S	MTF16NCFX	A02B2FZN	RHV35LREDOMDCF
12 PNTX-S	MTF16ROMDCF	A02B2FZN595	RHV35ZLRED0.2BCF
12 PNTX-SS	MTF16ROMDSS	A02B2HT5-75N181	RHV35ZLRED2.5BCF
12 R5BU-S	MTF20NCFX	A02B2HZN	RHV35ZLREDCF
12 R5OLO-S	MTF20ROMDCF	A02B2HZV	RHV38SMEDCF
12 R5OX-S	MTF24NCFX	A02B2PT210N181	RHV38SMEDOMD71
12 R6BU-S	MTF24ROMDCF	A02B2PWN	RHV38SMEDOMDCF
12 R6LO-S	MTF24ROMDSS	A02B2PZN	RHV38SRED0.2BOMDCF
12 R6X-S	MTF-324-SAMPLE	A02B2PZV	RHV38SRED0.5BCF
12 R6X-SS	MTF32NCFX	A02D2FZN	RHV38SRED0.5BOMDCF
12 RBU-S	MTF32NSSX	A02D2HZ20-80N	RHV38SRED5BCF
12 RTX-S	MTF32ROMDCF	A02D2MZN	RHV38SRED71
12 RTX-SS	MTF32ROMDSS	A03382A-000	RHV38SREDCF

12 S5OLO-S	MTP-3	A03382A-000-001	RHV38SREDOMD71
12 S5OX-S	MTP-3	A03382A-010	RHV38SREDOMDCF
12 S6BU-S	MTP-95-500	A03382A-045	RHV42LMED0.2BOMDCF
12 S6LO-S	MTP-95-500	A03382A-200	RHV42LMED71
12 S6X-SS	MTP-95-502	A03395	RHV42LMEDCF
12 SBR	MTP-95-502	A03397	RHV42LMEDOMDCF
12 STX-S	MTP-95-504	A04B2FN504	RHV42LRED0.2BCF
12 STX-SS	MTP-95-504	A04B2HN504	RHV42LRED0.2BOMDCF
12 TIZ .500-SS	MTP-95-521	A04B2HZ1-150N	RHV42LRED0.2BVITCF
12 TIZ .625-SS	MTP-95-521	A04B2HZ140N	RHV42LRED0.5BCF
12 TL-S	MTP-95-546	A04B2HZ150N	RHV42LRED0.5BOMDCF
12 TPL-S	MTP-95-546	A04B2HZN	RHV42LRED2BCF
12 TPL-S BP	MTP-95-547	A04B2HZV	RHV42LRED2BOMDCF
12 TPL-SS	MTP-95-547	A04B2PTN	RHV42LRED3BCF
12 TU-S	MTP-95-548	A04B2PY1-207N597CE	RHV42LRED3BOMDCF
12 TU-SS	MTP-95-548	A04B2PY1-207NCE	RHV42LRED5BOMDCF
12 TX-B	MTP-95-549	A04B2PZN	RHV42LRED71
12 TX-S	MTP-95-549	A04B2PZV	RHV42LREDCF
12 TX-S BP	MTP-95-550	A04C2DZ35-22N	RHV42LREDOMD0.5BCF
12 TX-SS	MTP-95-550	A04C2DZN	RHV42LREDOMD71
12 TZ-SS	MTP-95-551	A04C2DZV	RHV42LREDOMDCF
12 TZ-T	MTP-95-551	A04D2HZN	RHV42LREDVITOMDCF
12 TZ-ZY	MTP-95-552	A04D2MZN	RHV42ZLMEDCF
12 V5OLO-S	MTP-95-552	A04G2HZN	RHV42ZLRED0.5BCF
12 V5OX-S	MTP-95-553	A04G2PT4-375N	RHV42ZLRED6BVITCF
12 V6LO-S	MTP-95-553	A04G2PZN	RHV42ZLREDCF
12 V6X-B	MTP-95-554	A04H3HZN	RHVK06LMED3BVITCF
12 V6X-S	MTP-95-554	A04H3PWN	RHVK06LMED4BVITCF
12 V6X-S BP	MTP-95-555	A04H3PZN	RHVK12LMED71
12 V6X-S PLUG	MTP-95-555	A04J2HZN	RHZ06LMED0.2BOMDCF
12 V6X-SS	MTP-95-559	A04J2MY1-280NCE	RHZ06LMED0.2BVITCF
12 VBU-S	MTP-95-559	A04J2MZN	RHZ06LMED0.5BCF
12 VTX-B	MTP-95-560	A04K2PZN	RHZ06LMED0.5BVITCF
12 VTX-S	MTP-95-560	A05PD251P	RHZ06LMED3BCF
12 VTX-SS	MTP-95-561	A05PD251P	RHZ06LMED6BOMDCF
12 WBU-S	MTP-95-561	A05PD351P	RHZ06LMED71
12 WELO-S	MTP-95-562	A05PD351P	RHZ06LMEDCF
12 WELO-WLNL-S	MTP-95-562	A05PDCCL10	RHZ06LMEDOMD71
12 WETX-WLN-SS	MTP-96-648-51	A05PDCCL10	RHZ06LMEDOMDCF
12 WF5OLO-WLNL-S	MTP-96-648-51	A05PDCCL5	RHZ06LRED0.2BCF
12 WFTX-S	MTP-96-649	A05PDCCL5	RHZ06LRED0.2BOMDCF
12 WFTX-WLN-S	MTP-96-649	A05PGBP	RHZ06LRED0.5BCF
12 WGTX-S	MTSU CUSTOMSPAREPART2	A05PGBP	RHZ06LRED0.5BOMDCF
12 WGTX-WLN-S	MTSU REPAIRHOUR	A05PS25-1P	RHZ06LRED0.5BVITCF
12 WJJLO-S	MU05	A05PS25-1P	RHZ06LRED3BOMD71
12 WJJLO-WLNL-S	MU05R	A05PS25X1P	RHZ06LRED3BVITCF
12 WJJTX-WLN-S	MU10	A05PS25X1P	RHZ06LRED5BCF
12 WJLO-WLNL-S	MU10E	A05PX-SG	RHZ06LRED71
12 WJTX-WLN-S	MU10N	A05PX-SG	RHZ06LREDCF
12 WLNL-S	MU10R	A05RD251PM5MF	RHZ06LREDOMD71
12 WLO-S	MU13	A05RD251PM5MF	RHZ06LREDOMDCF
12 WLO-WLNL-S	MU13E	A05RD351PM5MF	RHZ06LREDOMDLUFTCF
12 WLZ-SS	MU13N	A05RD351PM5MF	RHZ06LREDVITCF

12 WNLO-WLNL-S	MU13R	A05RGBP	RHZ06SMED71
12 WNTX-WLN-S	MU17	A05RGBP	RHZ06SMEDCF
12 WNTX-WLN-SS	MU17E	A05RS251PM5MF	RHZ06SMEDLLOC71
12 WTX-WLN-S	MU17N	A05RS251PM5MF	RHZ06SMEDNBRLLOC71
12 XHL6-S	MU17R	A064M	RHZ06SMEDOMDCF
12 XHLO-S	MU21	A064R1/2-0E1	RHZ06SRED0.2BCF
12 XHQ1-S	MU21E	A064R1/2-SB2	RHZ06SRED0.5B71
12 XHQ2-S	MU21N	A064R1/4-OB1-S11	RHZ06SRED0.5BCF
12 XVQ2-S	MU21R	A064R3/8-SB2	RHZ06SRED0.5BOMDCF
1200-16-00125-0000-000000	MU26	A064-SD400A1	RHZ06SRED71
1200-16-00125-0000-000000	MU26N	A06G2HZN	RHZ06SREDCF
1200-16-00130-0000-000000	MU33	A06G2PZN	RHZ06SREDOMDCF
1200-16-00130-0000-000000	MU33N	A06G2PZV	RHZ06SREDVITCF
1200-16-00150-0000-000000	MV10/06	A06H3PZN	RHZ06ZLMED0.2BCF
1200-16-00150-0000-000000	MV10/06N	A06N2HZN	RHZ06ZLMED71
1200-16-00250-0000-000000	MV1001	A06-R1/2-S	RHZ06ZLMEDCF
1200-16-00250-0000-000000	MV1200S	A06-R3/8	RHZ06ZLRED71
1200-16-00300-0000-000000	MV1200SV	A06-R3/8-S	RHZ06ZLREDCF
1200-16-00300-0000-000000	MV1261S	A0VN2HZN	RHZ06ZSREDCF
1200-16-00320-0000-000000	MV13/06	A1010-0453	RHZ08LMED0.2BCF
1200-16-00320-0000-000000	MV13/06N	A10-1664	RHZ08LMED0.5BOMDCF
1200-16-00330-0000-000000	MV13/08	A101A-2005	RHZ08LMED71
1200-16-00330-0000-000000	MV13/08N	A102A-3376	RHZ08LMEDCF
1200-16-00380-2000-000000	MV13/10	A102R1/2-OD1	RHZ08LMEDOMD71
1200-16-00380-2000-000000	MV1600S	A102R1/2-OG1	RHZ08LMEDOMDCF
1200-16-00400-0000-000000	MV1600SV	A102R3/4-OD1	RHZ08LRED0.2B71
1200-16-00400-0000-000000	MV17/08	A103R1-OD1	RHZ08LRED0.2BCF
1200-16-00465-0000-000000	MV17/08N	A103R3/4-SD1	RHZ08LRED0.2BNBR71
1200-16-00465-0000-000000	MV17/10	A104M	RHZ08LRED0.2BOMDCF
1200-16-00480-2000-000000	MV2001	A104R1/2-OB1	RHZ08LRED0.5B71
1200-16-00480-2000-000000	MV2002	A104R1/2-OB1-S11	RHZ08LRED0.5BCF
1200-16-00500-0000-000000	MV2003	A104R1/2-SB1	RHZ08LRED0.5BOMDCF
1200-16-00500-0000-000000	MV2005	A104R3/4SB1	RHZ08LRED0.5BPTFECF
1200-16-00550-0000-000000	MV2005	A10-G45/01-G3/4	RHZ08LRED0.5BVITCF
1200-16-00550-0000-000000	MV200B	A116LB13001DC2A23	RHZ08LRED6BCF
1200-16-00580-0000-000000	MV200B3	A116LB13001DC2A23	RHZ08LRED71
1200-16-00580-0000-000000	MV200S	A11K0025/000AAAAA000A0000	RHZ08LREDCF
1200-16-00600-0000-000000	MV200S2	A11K0025/000AAAAA000A0000	RHZ08LREDOMD3BCF
1200-16-00600-0000-000000	MV200S3	A11K0040/000AAAAA000A0000	RHZ08LREDOMD71
1200-16-00650-0000-000000	MV200SV	A11K0040/000AAAAA000A0000	RHZ08LREDOMDCF
1200-16-00650-0000-000000	MV2011	A11K0550/000ABAAA000A0000	RHZ08LREDVITCF
1200-16-00715-0000-000000	MV2040/C	A11K0550/000ABAAA000A0000	RHZ08LREDVITOMDCF
1200-16-00715-0000-000000	MV261S	A11L0025/000AAAAA000A0000	RHZ08SMED0.5BOMDCF
1200-16-01000-0000-000000	MV261S2	A11L0025/000AAAAA000A0000	RHZ08SMED71
1200-16-01000-0000-000000	MV261S2-V	A11L0063/000AAAAA000A0000	RHZ08SMEDCF
120-02027-8	MV400B	A11L0063/000AAAAA000A0000	RHZ08SMEDOMD71
120-03026-8	MV400S	A11L0100/000AAAAB000A0000	RHZ08SMEDOMDCF
120-12002-8	MV400S2	A11L0100/000AAAAB000A0000	RHZ08SRED0.5BCF
120-126	MV400S2E	A11L0550/000AAAAA000A0000	RHZ08SRED2B71
120-126	MV400S2V	A11L0550/000AAAAA000A0000	RHZ08SRED3BITL71CF
12014FIL	MV400S3	A11L0640/000AAAAB000A0000	RHZ08SRED3BOMDCF
12014FIL	MV400SV	A11L0640/000AAAAB000A0000	RHZ08SRED71
12020FIL	MV401S	A11L0700/000AAAAA000A0000	RHZ08SREDCF

12020FIL	MV4020	A11L0700/000AAAAA000A0000	RHZ08SREDOMD71
12022FIL	MV461S	A11M0050/000AAAAA000A0000	RHZ08SREDOMDCF
12022FIL	MV461S2	A11M0050/000AAAAA000A0000	RHZ08ZLMED71
12023FIL	MV600B	A11M0100/000AAAAA000A0000	RHZ08ZLMEDCF
12023FIL	MV600S	A11M0100/000AAAAA000A0000	RHZ08ZLRED0.2B71
12024FIL	MV600SV	A11M0250/000AAAAA000A0000	RHZ08ZLRED0.5BCF
12024FIL	MV620S	A11M0250/000AAAAA000A0000	RHZ08ZLREDCF
1202FIL	MV661S	A11M0280/035AAAAA000A0000	RHZ08ZSMEDCF
1202FIL	MV661SV	A11M0280/035AAAAA000A0000	RHZ08ZSRED71
1202LT-4	MV800B	A11M0300/000AAAAA000A0000	RHZ08ZSREDCF
1202LT-4-4	MV800S	A11M0300/000AAAAA000A0000	RHZ08ZSREDVITCF
1202LT-4-4-4	MV800SV	A11M0400/000AAAAA000A0000	RHZ10LMED0.2B71
1202LT-5	MV861S	A11M0400/000AAAAA000A0000	RHZ10LMED0.2BCF
1202LT-5-5	MV861SV	A11M0400/035AAAAA000A0000	RHZ10LMED0.2BOMDCF
1202LT-6	MVCS46F	A11M0400/035AAAAA000A0000	RHZ10LMED0.5BOMDCF
1202LT-6-6	MVE1001	A11M0770/000AAAAA000A0000	RHZ10LMED71
12046FIL	MVE1002	A11M0770/000AAAAA000A0000	RHZ10LMEDCF
12046FIL	MVE1003	A11M0770/000ACAAA000A0000	RHZ10LMEDOMD71
12048FIL	MVE1005	A11M0770/000ACAAA000A0000	RHZ10LMEDOMDCF
12048FIL	MVE2001	A11N0160/000AAAAA0S0A0000	RHZ10LMEDVITCF
1204FIL	MVE2002	A11N0160/000AAAAA0S0A0000	RHZ10LRED0.2B71
1204FIL	MVE2003	A11N0170/000AAAAA000A0000	RHZ10LRED0.2BCF
12050FIL	MVE2005	A11N0170/000AAAAA000A0000	RHZ10LRED0.2BOMDCF
12050FIL	MVE2011	A11N0200/000AAAAB0G0A0000	RHZ10LRED0.5BCF
12052FIL	MVF2005	A11N0200/000AAAAB0G0A0000	RHZ10LRED0.5BITL71CF
12052FIL	MVF2005/C	A11N0320/000AAAAA000A0000	RHZ10LRED0.5BOMD71
12053FIL	MVF2010/E	A11N0320/000AAAAA000A0000	RHZ10LRED0.5BVITCF
12053FIL	MVF2020	A11N0350/000AAAAA000A0000	RHZ10LRED0.5BVITOMDCF
12054FIL	MVF2020/D	A11N0350/000AAAAA000A0000	RHZ10LRED2BCF
12054FIL	MVF2040	A11N0500/000AAAAA000A0000	RHZ10LRED2BOMDCF
12056FIL	MVF2075	A11N0500/000AAAAA000A0000	RHZ10LRED3BCF
12056FIL	MVF40013	A11P0025/000AAAAA000A0000	RHZ10LRED3BPTFECF
12057FIL	MVF40013/C	A11P0025/000AAAAA000A0000	RHZ10LRED5BCF
12057FIL	MVF4005/D	A11P0100/000AAAAA000A0000	RHZ10LRED71
12058FIL	MVFA2020	A11P0100/000AAAAA000A0000	RHZ10LREDCF
12058FIL	MVFK2040	A11P0125/000AAAAA000A0000	RHZ10LREDOMD71
12061FIL	MVFKA4010/C-A04	A11P0125/000AAAAA000A0000	RHZ10LREDOMDCF
12061FIL	MVI1200S	A11P0250/000AAAAA000A0000	RHZ10LREDVITCF
12063FIL	MVI1200SV	A11P0250/000AAAAA000A0000	RHZ10LREDVITOMDCF
12063FIL	MVI400S	A11P0320/000AAAAA000A0000	RHZ10SMED0.5BCF
12064FIL	MVI400S2	A11P0320/000AAAAA000A0000	RHZ10SMED6BOMDCF
12064FIL	MVI400S3	A11P2000/000AAAAA000A0000	RHZ10SMED71
12065FIL	MVI400SV	A11P2000/000AAAAA000A0000	RHZ10SMEDCF
12065FIL	MVI600S	A11Q0075/000AAAAB0B0A0000	RHZ10SMEDOMDCF
12066FIL	MVI600SV	A11Q0075/000AAAAB0B0A0000	RHZ10SRED0.2BCF
12066FIL	MVI800S	A11Q0100/000AAAAA000A0000	RHZ10SRED0.2BOMDCF
12069FIL	MVK12	A11Q0100/000AAAAA000A0000	RHZ10SRED0.2BVITCF
12069FIL	MVK16	A11Q0135/000AAAAB0G0A0000	RHZ10SRED0.5BCF
12070FIL	MVK16XB093	A11Q0135/000AAAAB0G0A0000	RHZ10SRED0.5BVITCF
12070FIL	MVK2	A11Q0230/000ABAAA000A0000	RHZ10SRED3BCF
12071FIL	MVK4	A11Q0230/000ABAAA000A0000	RHZ10SRED71
12071FIL	MVK6	A11Q0280/000ABAAA000A0000	RHZ10SREDCF
12072FIL	MVK8	A11Q0280/000ABAAA000A0000	RHZ10SREDITL71CF

12072FIL	MVP4AR	A11Q0385/000ABAAA000A0000	RHZ10SREDOMDCF
12073FIL	MVPSA06B100G24X	A11Q0385/000ABAAA000A0000	RHZ10ZLMED71
12073FIL	MVS-201-PCP	A11Q0500/000AAAAA000A0000	RHZ10ZLRED71
12074FIL	MVS-201-PCP	A11Q0500/000AAAAA000A0000	RHZ10ZLREDCF
12074FIL	MX.1518.102	A11Q0900/000AAAAA000A0000	RHZ10ZSRED3BCF
12075FIL	MX.1591.101	A11Q0900/000AAAAA000A0000	RHZ10ZSREDCF
12075FIL	MX.1591.103	A12FD25-1P-01	RHZ12LMED0.2BOMDCF
12076FIL	MX.1591.105	A12FD25-1P-01	RHZ12LMED4BOMDCF
12076FIL	MX.1591.106	A12L0030/000AAAAA000A0000	RHZ12LMED71
12077FIL	MX.1591.4.125	A12L0030/000AAAAA000A0000	RHZ12LMEDCF
12077FIL	MX.1591.8.10	A12M0010/000AAAAA0S0A0000	RHZ12LMEDOMD71
12079FIL	MX.1591.8.10.P	A12M0010/000AAAAA0S0A0000	RHZ12LMEDOMDCF
12079FIL	MX1518410X4	A12N0200/000AAAAA000A0000	RHZ12LRED0.2B71
1207FIL	MX1591410X4	A12N0200/000AAAAA000A0000	RHZ12LRED0.2BCF
1207FIL	MX2222	A12N0250/000AAAAA000A0000	RHZ12LRED0.2BOMD71
12080FIL	MX80LT02/05022401	A12N0250/000AAAAA000A0000	RHZ12LRED0.2BOMDCF
12080FIL	MX80LT03/07062901	A12PD251P	RHZ12LRED0.2BVITCF
12081FIL	MX80LT04/06031601	A12PD251P	RHZ12LRED0.5B71
12081FIL	MX80MT/04100101	A12PD351P	RHZ12LRED0.5BCF
1208FIL	MXA.7561.424	A12PD351P	RHZ12LRED0.5BD71MS
1208FIL	MXA.8511.400	A12PDCCM	RHZ12LRED0.5BMS
1209FIL	MXA.9531.223	A12PDCCM	RHZ12LRED0.5BOMDCF
1209FIL	MXA.9551.223	A12PGBP	RHZ12LRED2BCF
120AP	MXA1210CBG2GG121	A12PGBP	RHZ12LRED3BCF
120AS	MXA1210CBPGG121	A12PS251P	RHZ12LRED3BLUFT71
120AT	MXA1210CBS4GG121	A12PS251P	RHZ12LRED3BOMDCF
120BP	MXA1210CBU4RG121	A12Q0500/000AAAAA000A0000	RHZ12LRED5BOMDCF
120BT	MXA1210QBG2GG121	A12Q0500/000AAAAA000A0000	RHZ12LRED6BCF
120R-RAC-01	MXA1210QBG2XG121	A12Q0730/000AAAAA000A0000	RHZ12LRED71
120R-RAC-02	MXA1210QBS4GG121	A12Q0730/000AAAAA000A0000	RHZ12LREDCF
12-1 AW-SS	MXA1210QBU4RG121	A12RD251PG1MF	RHZ12LREDITL71CF
12-1/2 AW-SS	MXA7511223	A12RD251PG1MF	RHZ12LREDITL71OMDCF
12-1/2 F5OG-S	MXA7511424	A12RD351PG1MF	RHZ12LREDLUFT71
12-10 C5BU-S	MXA7551223	A12RD351PG1MF	RHZ12LREDOFEOMDCF
12-10 C5OLO-S	MXA7551424	A12RE351PG1MF	RHZ12LREDOMD71
12-10 ETX-S	MXA9511023	A12RE351PG1MF	RHZ12LREDOMDCF
12-10 F5OG5-S	MXA9511223	A12RGBP	RHZ12LREDVITCF
12-10 HBZ-SS	MXA9511424	A12RGBP	RHZ12LREDVITOMDCF
12-10 HLO-S	MXA9551424	A12RS25-1P-01	RHZ12SMED0.5BOMDCF
12-10 LOHB3-S	MXA9561424	A12RS25-1P-01	RHZ12SMED3BOMDCF
12-10 LOHL6-S	MXE2222	A12RS251PG1MF	RHZ12SMEDCF
12-10 TL-S	MXP-95-500	A12RS251PG1MF	RHZ12SMEDOMD71
12-10 TRBU-S	MXP-95-500	A15K0015/000AAAAA000A0000	RHZ12SMEDOMDCF
12-10 TRBZ-SS	MXP-95-502	A15K0015/000AAAAA000A0000	RHZ12SRED0.5BITL71CF
12-10 TRTXN-S	MXP-95-502	A15K0020/000AAAAA000A0000	RHZ12SRED71
12-10 V5OLO-S	MXP-95-504	A15K0020/000AAAAA000A0000	RHZ12SREDCF
12-10 V5OX-S	MXP-95-504	A15K0020/000ABAAA000A0000	RHZ12SREDLUFTCF
12-10 ZHBA-SS	MXP-95-522	A15K0020/000ABAAA000A0000	RHZ12SREDOMD71
121-00394-8	MXP-95-522	A15K0025/000AAAAA000A0000	RHZ12SREDOMDCF
121-00401-8	MXP-95-532	A15K0025/000AAAAA000A0000	RHZ12ZLRED0.2BCF
121-00801-8	MXP-95-532	A15K0025/000AAAAA000X0000	RHZ12ZLRED0.2BVITCF
121-00810-8	MXP-95-534	A15K0025/000AAAAA000X0000	RHZ12ZLRED0.5BCF
121-00814-8	MXP-95-534	A15K0030/000AAAAA000A0000	RHZ12ZLRED71

121-00820-8	MXP-95-537	A15K0030/000AAAAA000A0000	RHZ12ZLREDCF
121-00848-8	MXP-95-537	A15K0035/000AAAAA000A0000	RHZ12ZSRED71
121-00849-8	MXP-95-540	A15K0035/000AAAAA000A0000	RHZ12ZSREDCF
121-00850-8	MXP-95-540	A15K0035/000AAAAA000X0000	RHZ14SMED71
121-00879-8	MXP-95-558	A15K0035/000AAAAA000X0000	RHZ14SMEDCF
121-00902-8	MXP-95-558	A15K0035/000AAAAA0G0X0000	RHZ14SMEDOMD71
12-10C5OMLOS	MXP-95-564	A15K0035/000AAAAA0G0X0000	RHZ14SMEDOMDCF
12-10C5OMXS	MXP-95-564	A15K0038/000AAAAA000F0000	RHZ14SRED71
12-10C5OMXSV	MXP-95-987	A15K0038/000AAAAA000F0000	RHZ14SREDCF
12-10F5OMLOS	MXP-95-987	A15K0040/000AAAAA000A0000	RHZ14SREDOMD71
12-10F5OMLOSV	MXP-96-222	A15K0040/000AAAAA000A0000	RHZ14SREDOMDCF
12-10F5OMXS	MXP-96-222	A15K0043/000AAAAA000A0000	RHZ15LMED0.2BCF
12-10F5OMXSS	MXP-96-650	A15K0043/000AAAAA000A0000	RHZ15LMED0.5BCF
12-10HMK4S	MXP-96-650	A15K0048/000AAAAA000A0000	RHZ15LMED0.5BOMDCF
12-10HMK4SS	MXP-96-651	A15K0048/000AAAAA000A0000	RHZ15LMED0.5BSTL03A
12-10HMLOS	MXP-96-651	A15K0050/000AAAAA000A0000	RHZ15LMEDCF
12-10HMTXS	MXR8550	A15K0050/000AAAAA000A0000	RHZ15LMEDOMDCF
12-10HMTXSS	MXR9550	A15K0050/000AAAAA000F0000	RHZ15LMEDOMDCFVOL
12-10TRMLONS	MXR9560	A15K0050/000AAAAA000F0000	RHZ15LMEDVITCF
12-10TRMLONSS	N04A4-10.0N	A15K0050/000AAAAA000X0000	RHZ15LRED0.2B71
12-10TRMTXS	N04A4-5.0N	A15K0050/000AAAAA000X0000	RHZ15LRED0.2BOMDCF
12-10TRMTXSBP	N04A4-5.0NS	A15K0052/000AAAAA000A0000	RHZ15LRED0.2BVITCF
12-10TRMTXSS	N04B4-10.0N	A15K0052/000AAAAA000A0000	RHZ15LRED0.5B71
12110FIL	N04B4-5.0N	A15K0055/000AAAAA000A0000	RHZ15LRED0.5BCF
12110FIL	N08-C2-0000	A15K0055/000AAAAA000A0000	RHZ15LRED0.5BOMDCF
12111FIL	N08-C2-0000	A15K0060/000AAAAA000A0000	RHZ15LRED0.5BVITCF
12111FIL	N10X1.25/1-50	A15K0060/000AAAAA000A0000	RHZ15LRED2BCF
121-125	N10X1.25/3-50	A15K0070/000AAAAA000A0000	RHZ15LRED3BCF
121-126	N10X1.5/3-50	A15K0070/000AAAAA000A0000	RHZ15LRED3BOMDCF
121-126	N10X1/1-50	A15K0070/000ADAAA000A0000	RHZ15LRED5BCF
12112FIL	N10X1/3-50	A15K0070/000ADAAA000A0000	RHZ15LRED71
12112FIL	N10X1/5-50	A15K0080/000AAAAA000A0000	RHZ15LREDCF
12113FIL	N10X2/1-50	A15K0080/000AAAAA000A0000	RHZ15LREDOMD71
12113FIL	N1200B	A15K0090/000AAAAA000A0000	RHZ15LREDOMDCF
12114FIL	N1200BV	A15K0090/000AAAAA000A0000	RHZ15LREDOMDSA6CF
12114FIL	N1200S	A15K0100/000AAAAA000A0000	RHZ15LREDOMDSP163CF
12115FIL	N12L0030/000ABAAE000D0000	A15K0100/000AAAAA000A0000	RHZ15LREDVITCF
12115FIL	N12L0030/000ABAAE000D0000	A15K0100/000AAAAA000F0000	RHZ15ZLRED0.2BCF
12116FIL	N12X1.5/1-50	A15K0100/000AAAAA000F0000	RHZ15ZLRED0.5BCF
12116FIL	N12X1.5/3-50	A15K0100/000AAAAA000X0000	RHZ15ZLRED2BCF
12117FIL	N12X1.5/5-50	A15K0100/000AAAAA000X0000	RHZ15ZLRED71
12117FIL	N12X1/1-50	A15K0100/000AAAAB000A0000	RHZ15ZLREDCF
12118FIL	N12X1/3-50	A15K0100/000AAAAB000A0000	RHZ16SMED0.5B71
12118FIL	N12X1/5-50	A15K0100/000AAAAB0G0A0000	RHZ16SMED0.5BCF
12119FIL	N14Q0025/000AAAAE000A0000	A15K0100/000AAAAB0G0A0000	RHZ16SMED3B71
12119FIL	N14Q0025/000AAAAE000A0000	A15K0100/000AABAA000A0000	RHZ16SMED71
12-12 B2HF-SS	N14Q0025/000AAAAE000F0000	A15K0100/000AABAA000A0000	RHZ16SMEDCF
12-12 C5BZ-SS	N14Q0025/000AAAAE000F0000	A15K0100/100AAAAA000F0000	RHZ16SMEDOMD71
12-12 CBZ-SS	N14X1.5/1-50	A15K0100/100AAAAA000F0000	RHZ16SMEDOMDCF
12-12 DBZ-SS	N14X1.5/3-50	A15K0110/000AAAAA000A0000	RHZ16SMEDVITCF
12-12 EBMP7-SS	N14X1.5/5-50	A15K0110/000AAAAA000A0000	RHZ16SRED0.2BCF
12-12 EBZ-SS	N15X1.5/74324-100	A15K0115/000ADAAA000A0000	RHZ16SRED0.2BOMDCF
12-12 FBZ-B	N1600S	A15K0115/000ADAAA000A0000	RHZ16SRED0.2BVITCF

12-12 FBZ-SS	N16K0005/000AAAAA000A0000	A15K0120/000AAAAA000A0000	RHZ16SRED0.5BOMDCF
12-12 FE-B	N16K0005/000AAAAA000A0000	A15K0120/000AAAAA000A0000	RHZ16SRED2BOMDCF
12-12 FE-SS	N16K0005/000AAAAE000A0000	A15K0125/000AAAAA000A0000	RHZ16SRED3BCF
12-12 FH4BZ-SS	N16K0005/000AAAAE000A0000	A15K0125/000AAAAA000A0000	RHZ16SRED3BOMDCF
12-12 FHC-6MO	N16K0005/000AAAAE000F0000	A15K0135/000AAAAA000A0000	RHZ16SRED5BOMDCF
12-12 FHC-S	N16K0005/000AAAAE000F0000	A15K0135/000AAAAA000A0000	RHZ16SRED71
12-12 FHC-SS	N16K0010/000AAAAA000A0000	A15K0135/000AAAAA000F0000	RHZ16SREDCF
12-12 FHOA-SS	N16K0010/000AAAAA000A0000	A15K0135/000AAAAA000F0000	RHZ16SREDOFEDCF
12-12 GBZ-SS	N16K0010/000AAAAB000F0000	A15K0140/000AAAAA000A0000	RHZ16SREDOMD71
12-12 HBZ-SS	N16K0010/000AAAAB000F0000	A15K0140/000AAAAA000A0000	RHZ16SREDOMDCF
12-12 MCN-SS	N16K0010/000AAAAD000A0000	A15K0140/000AAAAA000F0000	RHZ16ZSMEDCF
12-12 ME-B	N16K0010/000AAAAD000A0000	A15K0140/000AAAAA000F0000	RHZ16ZSRED0.5BCF
12-12 ME-SS	N16K0010/000AAAAE000A0000	A15K0150/000AAAAA000A0000	RHZ16ZSRED3BCF
12-12 MHLN-6MO 3.0	N16K0010/000AAAAE000A0000	A15K0150/000AAAAA000A0000	RHZ16ZSRED71
12-12 MHLN-M 3.0	N16K0013/000AAAAA000A0000	A15K0150/000AAAAA000F0000	RHZ16ZSREDCF
12-12 MHLN-SS 3.0	N16K0013/000AAAAA000A0000	A15K0150/000AAAAA000F0000	RHZ18LMED0.2BOMDCF
12-12 MHLN-SS 4.0	N16K0015/000AAAAA000A0000	A15K0150/000AABAA000X0000	RHZ18LMED0.2BVITCF
12-12 MHLN-SS 6.0	N16K0015/000AAAAA000A0000	A15K0150/000AABAA000X0000	RHZ18LMED0.5BCF
12-12 MHN-625	N16K0015/000AAAAB000F0000	A15K0160/000AAAAA000A0000	RHZ18LMED2BCF
12-12 MHN-6MO	N16K0015/000AAAAB000F0000	A15K0160/000AAAAA000A0000	RHZ18LMED3BOMDCF
12-12 MHN-B	N16K0015/000AAAAD000A0000	A15K0170/000AAAAA000A0000	RHZ18LMED3BVITOMDCF
12-12 MHN-HC	N16K0015/000AAAAD000A0000	A15K0170/000AAAAA000A0000	RHZ18LMED71
12-12 MHN-M	N16K0015/000AAAAE000A0000	A15K0180/000AAAAA000A0000	RHZ18LMEDCF
12-12 MHN-SS	N16K0015/000AAAAE000A0000	A15K0180/000AAAAA000A0000	RHZ18LMEDOMD71
12-12 RA-SS	N16K0015/000AAAAE000F0000	A15K0200/000AAAAA000A0000	RHZ18LMEDOMDCF
12-12 SE-B	N16K0015/000AAAAE000F0000	A15K0200/000AAAAA000A0000	RHZ18LRED0.1BOMDSA1
12-12 SE-SS	N16K0020/000AAAAA000A0000	A15K0200/000ABAAA000A0000	RHZ18LRED0.2B71
12-12 WBMP7-SS	N16K0020/000AAAAA000A0000	A15K0200/000ABAAA000A0000	RHZ18LRED0.2BCF
12-12 WBZ-SS	N16K0020/000AAAAA000F0000	A15K0200/000ACAAA000A0000	RHZ18LRED0.2BITL71CF
12-12 XH2BZ-SS	N16K0020/000AAAAA000F0000	A15K0200/000ACAAA000A0000	RHZ18LRED0.2BOMDCF
12-12 XHBZ-SS	N16K0020/000AAAAB000F0000	A15K0210/000AAAAA000A0000	RHZ18LRED0.2BVITCF
12-12 ZELW-SS	N16K0020/000AAAAB000F0000	A15K0210/000AAAAA000A0000	RHZ18LRED0.5B71
12-12 ZHBA5-SS	N16K0020/000AAAAE000A0000	A15K0215/000AAAAA000A0000	RHZ18LRED0.5BCF
12-12 ZHBA-SS	N16K0020/000AAAAE000A0000	A15K0215/000AAAAA000A0000	RHZ18LRED0.5BOMDCF
12-12 ZHBW-SS	N16K0020/000AAAAE000F0000	A15K0225/000AAAAA000A0000	RHZ18LRED2B71
12-12 ZHLW-SS	N16K0020/000AAAAE000F0000	A15K0225/000AAAAA000A0000	RHZ18LRED2BCF
12-12 ZPC-SS	N16K0025/000AAAAA000A0000	A15K0240/000AAAAA000A0000	RHZ18LRED3BCF
12-12-10JMTXSS	N16K0025/000AAAAA000A0000	A15K0240/000AAAAA000A0000	RHZ18LRED5BCF
12-12-12 FT-6MO	N16K0025/000AAAAB000A0000	A15K0250/000AAAAA000A0000	RHZ18LRED6BOMDCF
12-12-12 FT-B	N16K0025/000AAAAB000A0000	A15K0250/000AAAAA000A0000	RHZ18LRED71
12-12-12 FT-M	N16K0025/000AAAAB000F0000	A15K0250/000ABAAA000A0000	RHZ18LREDCF
12-12-12 FT-SS	N16K0025/000AAAAB000F0000	A15K0250/000ABAAA000A0000	RHZ18LREDITL71CF
12-12-12 JBZ-SS	N16K0025/000AAAAD000A0000	A15K0260/000AAAAA000A0000	RHZ18LREDITL71OMDCF
12-12-12 MBZ-SS	N16K0025/000AAAAD000A0000	A15K0260/000AAAAA000A0000	RHZ18LREDLUFTCF
12-12-12 MT-SS	N16K0025/000AAAAE000A0000	A15K0280/000AAAAA000A0000	RHZ18LREDOMD71
12-12-12 OBZ-SS	N16K0025/000AAAAE000A0000	A15K0280/000AAAAA000A0000	RHZ18LREDOMDCF
12-12-12 RBZ-SS	N16K0030/000AAAAA000A0000	A15K0300/000AAAAA000A0000	RHZ18LREDVITOMDCF
12-12-12 SBZ-SS	N16K0030/000AAAAA000A0000	A15K0300/000AAAAA000A0000	RHZ18ZLMED71
12-12-12 ST-SS	N16K0030/000AAAAD000A0000	A15K0300/000AAAAA000F0000	RHZ18ZLRED0.2BCF
12-12-16 WJLO-S V0894	N16K0030/000AAAAD000A0000	A15K0300/000AAAAA000F0000	RHZ18ZLREDCF
12121FIL	N16K0030/000AAAAE000A0000	A15K0300/000ABAAA000A0000	RHZ18ZLREDVITCF
12121FIL	N16K0030/000AAAAE000A0000	A15K0300/000ABAAA000A0000	RHZ20SMED0.2BOMDCF
12122FIL	N16K0035/000ABAAA000A0000	A15K0320/000AAAAA000A0000	RHZ20SMED0.2BVITCF

12122FIL	N16K0035/000ABAAA000A0000	A15K0320/000AAAAA000A0000	RHZ20SMED0.5BOMDCF
12123FIL	N16K0035/000ABAAD000A0000	A15K0350/000AAAAA000A0000	RHZ20SMED0.5BVITCF
12123FIL	N16K0035/000ABAAD000A0000	A15K0350/000AAAAA000A0000	RHZ20SMED71
12-12-4 JLZ-SS	N16K0040/000AAAAB000A0000	A15K0400/000AAAAA000A0000	RHZ20SMEDCF
12124FIL	N16K0040/000AAAAB000A0000	A15K0400/000AAAAA000A0000	RHZ20SMEDOMD71
12124FIL	N16K0040/000AAAAB000F0000	A15K0400/000AAAAA0G0A0000	RHZ20SMEDOMDCF
12124FIL	N16K0040/000AAAAB000F0000	A15K0400/000AAAAA0G0A0000	RHZ20SRED0.2BOMDCF
12124FIL	N16K0040/000AAAAD000A0000	A15K0400/000AAAAA0S0A0000	RHZ20SRED0.2BVITCF
12-12-6 JBZ-SS	N16K0040/000AAAAD000A0000	A15K0400/000AAAAA0S0A0000	RHZ20SRED0.5BCF
12-12-6 JLZ-6MO	N16K0050/000AAAAA000A0000	A15K0440/000AAAAA000A0000	RHZ20SRED3BOMDCF
12-12-6 JLZ-SS	N16K0050/000AAAAA000A0000	A15K0440/000AAAAA000A0000	RHZ20SRED71
12-12-6JMTXSS	N16K0050/000AAAAB000A0000	A15K0450/000AAAAA000A0000	RHZ20SREDCF
12-12-8 JBZ-SS	N16K0050/000AAAAB000A0000	A15K0450/000AAAAA000A0000	RHZ20SREDOMD71
12-12-8 JLZ-6MO	N16K0050/000AAAAB000F0000	A15K0500/000AAAAA000A0000	RHZ20SREDOMDCF
12-12-8 JLZ-IIY	N16K0050/000AAAAB000F0000	A15K0500/000AAAAA000A0000	RHZ20SREDVITCF
12-12-8 JLZ-MMX	N16K0050/000AAAABBG0A0000	A15K0500/000AAAAA000F0000	RHZ20ZSRED71
12-12-8 JLZ-SS	N16K0050/000AAAABBG0A0000	A15K0500/000AAAAA000F0000	RHZ20ZSREDCF
12128FIL	N16K0050/000AAAAD000A0000	A15K0500/000ABAAA000A0000	RHZ20ZSREDVITCF
12128FIL	N16K0050/000AAAAD000A0000	A15K0500/000ABAAA000A0000	RHZ22LMED0.5BCF
12-12-8JMTXS	N16K0050/000AAAAE000A0000	A15K0500/000ACAAA000A0000	RHZ22LMED3BCF
12-12-8R5OMLOS	N16K0050/000AAAAE000A0000	A15K0500/000ACAAA000A0000	RHZ22LMED3BVITCF
12129FIL	N16K0050/000AAAAE000X0000	A15K0500/000ADAAA000A0000	RHZ22LMED71
12129FIL	N16K0050/000AAAAE000X0000	A15K0500/000ADAAA000A0000	RHZ22LMEDCF
12-12F6MK4S	N16K0050/013AAAAA000A0000	A15K0515/000AAAAA0G0A0000	RHZ22LMEDOMD71
12-12F6MK4SS	N16K0050/013AAAAA000A0000	A15K0515/000AAAAA0G0A0000	RHZ22LMEDOMDCF
12-12FHC-M	N16K0060/000AAAAA000A0000	A15K0530/000AAAAA000A0000	RHZ22LMEDVITCF
12-12K MHN-SS	N16K0060/000AAAAA000A0000	A15K0530/000AAAAA000A0000	RHZ22LMEDVITOMDCF
12-12K RA-SS	N16K0060/000AAAAD000A0000	A15K0540/000AAAAA000A0000	RHZ22LRED0.2B71
12-12R CBZ-SS	N16K0060/000AAAAD000A0000	A15K0540/000AAAAA000A0000	RHZ22LRED0.2BCF
12-12R FBZ-SS	N16K0060/000AAAAD000F0000	A15K0550/000AAAAA000A0000	RHZ22LRED0.2BOMDCF
12-12R MHN-SS	N16K0060/000AAAAD000F0000	A15K0550/000AAAAA000A0000	RHZ22LRED0.5BCF
12-12R RA-SS	N16K0060/000AAAAE000A0000	A15K0550/000AAAAA0G0A0000	RHZ22LRED0.5BOMDCF
12-12XHMKA6S	N16K0060/000AAAAE000A0000	A15K0550/000AAAAA0G0A0000	RHZ22LRED2BCF
12130FIL	N16K0075/000AAAAA000A0000	A15K0580/000AAAAA000F0000	RHZ22LRED3BOMDCF
12130FIL	N16K0075/000AAAAA000A0000	A15K0580/000AAAAA000F0000	RHZ22LRED4BOMDCF
12131FIL	N16K0080/000AAAAA000A0000	A15K0600/000AAAAA000A0000	RHZ22LRED5BCF
12131FIL	N16K0080/000AAAAA000A0000	A15K0600/000AAAAA000A0000	RHZ22LRED6BOMDCF
12134FIL	N16K0080/000AAAAD000A0000	A15K0600/000AAAAA000F0000	RHZ22LRED71
12134FIL	N16K0080/000AAAAD000A0000	A15K0600/000AAAAA000F0000	RHZ22LREDCF
1213FIL	N16K0080/000AAAAE000A0000	A15K0605/000AAAAA000A0000	RHZ22LREDOMD71
1213FIL	N16K0080/000AAAAE000A0000	A15K0605/000AAAAA000A0000	RHZ22LREDOMDCF
12-14 F5OX-S	N16K0085/000AAAAE000A0000	A15K0615/000AAAAA000A0000	RHZ22LREDVITOMDCF
12145FIL	N16K0085/000AAAAE000A0000	A15K0615/000AAAAA000A0000	RHZ22ZLRED0.5B71
12145FIL	N16K0100/000AAAAA000A0000	A15K0615/000AAAAA0G0A0000	RHZ22ZLRED0.5BCF
12146FIL	N16K0100/000AAAAA000A0000	A15K0615/000AAAAA0G0A0000	RHZ22ZLRED71
12146FIL	N16K0100/000AAAAB000A0000	A15K0630/000AAAAA000F0000	RHZ22ZLREDCF
12147FIL	N16K0100/000AAAAB000A0000	A15K0630/000AAAAA000F0000	RHZ25SMED0.5BCF
12147FIL	N16K0100/000AAAAB000F0000	A15K0650/000AAAAA000A0000	RHZ25SMEDCF
1215FIL	N16K0100/000AAAAB000F0000	A15K0650/000AAAAA000A0000	RHZ25SMEDOMDCF
1215FIL	N16K0100/000AAAAD000A0000	A15K0650/050AAAAA000A0000	RHZ25SRED0.2BCF
12-16 C5OLO-S	N16K0100/000AAAAD000A0000	A15K0650/050AAAAA000A0000	RHZ25SRED0.5BCF
12-16 C5OLO-S BP	N16K0100/000AAAAE000A0000	A15K0700/000AAAAA000A0000	RHZ25SRED0.5BOMDCF
12-16 C5OX-S	N16K0100/000AAAAE000A0000	A15K0700/000AAAAA000A0000	RHZ25SRED2BCF

12-16 CLO-S	N16K0120/000AAAAD000A0000	A15K0700/000AAAAA000F0000	RHZ25SRED3BOMDCF
12-16 CTX-S	N16K0120/000AAAAD000A0000	A15K0700/000AAAAA000F0000	RHZ25SRED5BCF
12-16 F5BU-S	N16K0120/000AAAAE000A0000	A15K0700/000ABAAA000A0000	RHZ25SRED5BOMDCF
12-16 F5OG5-S	N16K0120/000AAAAE000A0000	A15K0700/000ABAAA000A0000	RHZ25SRED71
12-16 F5OLO-S	N16K0125/000AAAAA000A0000	A15K0720/000AAAAA000F0000	RHZ25SREDCF
12-16 F5OX-S	N16K0125/000AAAAA000A0000	A15K0720/000AAAAA000F0000	RHZ25SREDOMD71
12-16 FBZ-SS	N16K0125/000AAAAD000A0000	A15K0720/000AAAAA0G0A0000	RHZ25SREDOMDCF
12-16 FLO-S	N16K0125/000AAAAD000A0000	A15K0720/000AAAAA0G0A0000	RHZ25SREDVITCF
12-16 FTX-S	N16K0130/000AAAAB000A0000	A15K0750/000AAAAA000A0000	RHZ25SREDVITOMDCF
12-16 LHQ2-S	N16K0130/000AAAAB000A0000	A15K0750/000AAAAA000A0000	RHZ25ZSMEDCF
12-16 LOHB3-S	N16K0130/000AAAAE000A0000	A15K0750/000AAAAA000F0000	RHZ25ZSREDCF
12-16 T2HF-SS	N16K0130/000AAAAE000A0000	A15K0750/000AAAAA000F0000	RHZ28LMED0.5BOMDCF
12-16 V5OLO-S	N16K0140/000AAAAB000A0000	A15K0750/000AAAAA0G0A0000	RHZ28LMED2.5BCF
12-16 VTX-S	N16K0140/000AAAAB000A0000	A15K0750/000AAAAA0G0A0000	RHZ28LMED2.5BOMDCF
12-16-12R4OMLOS	N16K0160/000AAAAB000F0000	A15K0780/000AAAAA000F0000	RHZ28LMED2BOMDCF
12-16-12R5OMLOS	N16K0160/000AAAAB000F0000	A15K0780/000AAAAA000F0000	RHZ28LMED3BOMDCF
12163FIL	N16K0160/000AAAAE000A0000	A15K0800/000AAAAA000A0000	RHZ28LMED4BOMDCF
12163FIL	N16K0160/000AAAAE000A0000	A15K0800/000AAAAA000A0000	RHZ28LMED5BOMDCF
12164FIL	N16K0200/000AAAAA000A0000	A15K0800/000AAAAA000F0000	RHZ28LMEDCF
12164FIL	N16K0200/000AAAAA000A0000	A15K0800/000AAAAA000F0000	RHZ28LMEDOMDCF
12166FIL	N16K0200/000AAAAE000A0000	A15K0890/000ABAAA000A0000	RHZ28LRED0.2B71
12166FIL	N16K0200/000AAAAE000A0000	A15K0890/000ABAAA000A0000	RHZ28LRED0.2BCF
12168FIL	N16K0240/000AAAAE000A0000	A15K0900/000AAAAA000A0000	RHZ28LRED0.2BOMDCF
12168FIL	N16K0240/000AAAAE000A0000	A15K0900/000AAAAA000A0000	RHZ28LRED0.5B71
12-16C3MXS	N16K0250/000AAAAD000A0000	A15K0930/000AAAAA000A0000	RHZ28LRED0.5BCF
12-16C4OMLOS	N16K0250/000AAAAD000A0000	A15K0930/000AAAAA000A0000	RHZ28LRED0.5BOMDCF
12-16C4OMXS	N16K0250/000AAAAE000A0000	A15K1000/000AAAAA000A0000	RHZ28LRED2BCF
12-16C4OMXSBP	N16K0250/000AAAAE000A0000	A15K1000/000AAAAA000A0000	RHZ28LRED2BOMDCF
12-16C4OMXSS	N16K0260/000AAAAD000A0000	A15K1018/000AAAAA000A0000	RHZ28LRED3BCF
12-16C5OMLOS	N16K0260/000AAAAD000A0000	A15K1018/000AAAAA000A0000	RHZ28LRED3BOMDCF
12-16CMTXS	N16K0270/000AAAAE000A0000	A15K1030/000AAAAA000F0000	RHZ28LRED3BVITOMDCF
12-16F3MK4S	N16K0270/000AAAAE000A0000	A15K1030/000AAAAA000F0000	RHZ28LRED5BCF
12-16F3MXS	N16K0300/000ABAAC000A0000	A15K1055/000ABAAA000F0000	RHZ28LRED5BOMDCF
12-16F3MXSS	N16K0300/000ABAAC000A0000	A15K1055/000ABAAA000F0000	RHZ28LRED6BOMDCF
12-16F42EDMLOS	N16K0500/000AAAAA000A0000	A15K1060/000AAAAA000A0000	RHZ28LRED71
12-16F42EDMLOSS	N16K0500/000AAAAA000A0000	A15K1060/000AAAAA000A0000	RHZ28LREDCF
12-16F42EDMLOSV	N16K0650/000AAAAD000A0000	A15K1100/000AAAAA000A0000	RHZ28LREDOMD71
12-16F42EDMXS	N16K0650/000AAAAD000A0000	A15K1100/000AAAAA000A0000	RHZ28LREDOMDCF
12-16F42EDMXSS	N16K0800/000AAAAE000A0000	A15K1100/000AAAAA000F0000	RHZ28LREDVITCF
12-16F4OMXS	N16K0800/000AAAAE000A0000	A15K1100/000AAAAA000F0000	RHZ28LREDVITOMDCF
12-16F4OMXSS	N16L0010/000AAAAA000A0000	A15K1250/000AAAAA000A0000	RHZ28ZLRED6BCF
12-16F5OMLOS	N16L0010/000AAAAA000A0000	A15K1250/000AAAAA000A0000	RHZ28ZLRED71
12-16F5OMXS	N16L0010/000AAAAB000F0000	A15K1450/000AAAAA000A0000	RHZ28ZLREDCF
12-16F642EDMXS	N16L0010/000AAAAB000F0000	A15K1450/000AAAAA000A0000	RHZ30SMED71
12-16F6MK4S	N16L0010/000AAAAD000A0000	A15K1500/000AAAAA000A0000	RHZ30SMEDOMDCF
12-16F6MK4SS	N16L0010/000AAAAD000A0000	A15K1500/000AAAAA000A0000	RHZ30SRED0.2BCF
1216FIL	N16L0010/000AAAAE000A0000	A15K-499-022	RHZ30SRED2BOMDCF
1216FIL	N16L0010/000AAAAE000A0000	A15K-499-022	RHZ30SRED71
12-16FMK4S	N16L0015/000AAAAA000A0000	A15L0010/000AAAAA000A0000	RHZ30SREDCF
12-16FMK4SS	N16L0015/000AAAAA000A0000	A15L0010/000AAAAA000A0000	RHZ30SREDOMD71
12-16FMTXB	N16L0020/000AAAAA000A0000	A15L0025/000AAAAA000A0000	RHZ30SREDOMDCF
12-16FMTXS	N16L0020/000AAAAA000A0000	A15L0025/000AAAAA000A0000	RHZ30SREDVITCF
12-16FMTXSS	N16L0020/000AAAAB000F0000	A15L0025/000AAAAA0S0A0000	RHZ30ZSRED71

12-16LEMQ1SS	N16L0020/000AAAAB000F0000	A15L0025/000AAAAA0S0A0000	RHZ30ZSREDCF
12-16LEMQ2SS	N16L0020/000AAAAD000A0000	A15L0030/000AAAAA000A0000	RHZ35LMED0.2BOMDCF
12-16V4OMLOS	N16L0020/000AAAAD000A0000	A15L0030/000AAAAA000A0000	RHZ35LMED2BMGEBCF
12-16XEMQ1CF	N16L0025/000AAAAA000A0000	A15L0035/000AAAAA000A0000	RHZ35LMEDCF
12-16XEMQ1SS	N16L0025/000AAAAA000A0000	A15L0035/000AAAAA000A0000	RHZ35LMEDOMD71
12-16XEMQ2CF	N16L0025/000AAAAB000A0000	A15L0040/000AAAAA000A0000	RHZ35LMEDOMDCF
12-16XEMQ2SS	N16L0025/000AAAAB000A0000	A15L0040/000AAAAA000A0000	RHZ35LRED0.2BCF
12172FIL	N16L0025/000AAAAB000F0000	A15L0040/000AABAA000A0000	RHZ35LRED0.2BVITCF
12172FIL	N16L0025/000AAAAB000F0000	A15L0040/000AABAA000A0000	RHZ35LRED0.5BCF
12173FIL	N16L0025/000AAAABC00A0000	A15L0050/000AAAAA000A0000	RHZ35LRED0.5BOMDCF
12173FIL	N16L0025/000AAAABC00A0000	A15L0050/000AAAAA000A0000	RHZ35LRED2BOMDCF
12174FIL	N16L0025/000AAAAD000A0000	A15L0050/000AAAAA000X0000	RHZ35LRED3BCF
12174FIL	N16L0025/000AAAAD000A0000	A15L0050/000AAAAA000X0000	RHZ35LRED4BOMDCF
12175FIL	N16L0030/000AAAAE000A0000	A15L0050/000AAABA000A0000	RHZ35LRED6BCF
12175FIL	N16L0030/000AAAAE000A0000	A15L0050/000AAABA000A0000	RHZ35LRED71
1217FIL	N16L0035/000AAAAB000A0000	A15L0050/000ABABA000A0000	RHZ35LREDCF
1217FIL	N16L0035/000AAAAB000A0000	A15L0050/000ABABA000A0000	RHZ35LREDOMDCF
1217FIL	N16L0040/000AAAAE000A0000	A15L0060/000AAAAA000A0000	RHZ35LREDSW602BOCF
1217FIL	N16L0040/000AAAAE000A0000	A15L0060/000AAAAA000A0000	RHZ35LREDVITCF
12181FIL	N16L0040/000AABAA000A0000	A15L0060/000AAAAA000F0000	RHZ35ZLRED0.5BCF
12181FIL	N16L0040/000AABAA000A0000	A15L0060/000AAAAA000F0000	RHZ35ZLREDCF
12182FIL	N16L0040/000AABAB000A0000	A15L0063/000AAAAA000A0000	RHZ38SMED71
12182FIL	N16L0040/000AABAB000A0000	A15L0063/000AAAAA000A0000	RHZ38SMEDCF
12183FIL	N16L0050/000AAAAA000A0000	A15L0065/000AAAAA000A0000	RHZ38SMEDOMDCF
12183FIL	N16L0050/000AAAAA000A0000	A15L0065/000AAAAA000A0000	RHZ38SRED0.2BCF
12183FIL	N16L0050/000AAAAB000A0000	A15L0070/000AAAAA000F0000	RHZ38SRED0.5BOMDCF
12183FIL	N16L0050/000AAAAB000A0000	A15L0070/000AAAAA000F0000	RHZ38SRED4BOMDCF
12185FIL	N16L0050/000AAAAD000A0000	A15L0075/000AAAAA000A0000	RHZ38SREDCF
12185FIL	N16L0050/000AAAAD000A0000	A15L0075/000AAAAA000A0000	RHZ38SREDOMD71
12-18L LOHU86-S	N16L0050/000AAAAE000A0000	A15L0075/000AAAAA000F0000	RHZ38SREDOMDCF
1219FIL	N16L0050/000AAAAE000A0000	A15L0075/000AAAAA000F0000	RHZ38SREDVITCF
1219FIL	N16L0050/000AAAAE000F0000	A15L0075/000AAAAB000A0000	RHZ38ZSREDCF
121F2523-852023-483824P8	N16L0050/000AAAAE000F0000	A15L0075/000AAAAB000A0000	RHZ42LMED0.5BOMDCF
121F2523-852023-483824P8	N16L0060/000AAAAA000A0000	A15L0080/000AAAAA000A0000	RHZ42LMEDCF
121F2523-876024-483824P8	N16L0060/000AAAAA000A0000	A15L0080/000AAAAA000A0000	RHZ42LMEDOMDCF
121F2523-876024-483824P8	N16L0060/000AAAAE000A0000	A15L0100/000AAAAA000A0000	RHZ42LRED0.2BCF
121F4706	N16L0060/000AAAAE000A0000	A15L0100/000AAAAA000A0000	RHZ42LRED0.2BOMDCF
121F4706	N16L0060/000AAAAE0A0A0000	A15L0100/000AAAAB000A0000	RHZ42LRED0.2BVOMDCF
121F47-4270-486265C2	N16L0060/000AAAAE0A0A0000	A15L0100/000AAAAB000A0000	RHZ42LRED0.5BCF
121F47-4270-486265C2	N16L0070/000AAAAD000A0000	A15L0100/000AAAABF00A0000	RHZ42LRED0.5BOMDCF
121F63	N16L0070/000AAAAD000A0000	A15L0100/000AAAABF00A0000	RHZ42LRED2.5BOMDCF
121F63	N16L0070/000AAAAE000A0000	A15L0100/000CAAAC000A0000	RHZ42LRED2BOMDCF
121F6321-852023-483824T1	N16L0070/000AAAAE000A0000	A15L0100/000CAAAC000A0000	RHZ42LRED3BCF
121F6321-852023-483824T1	N16L0080/000AAAAA000A0000	A15L0110/000AAAAA000A0000	RHZ42LRED3BOMDCF
121F64	N16L0080/000AAAAA000A0000	A15L0110/000AAAAA000A0000	RHZ42LRED5BCF
121F64	N16L0080/000AAAAB000A0000	A15L0115/000AAAAA000A0000	RHZ42LRED5BOMDCF
121F67	N16L0080/000AAAAB000A0000	A15L0115/000AAAAA000A0000	RHZ42LRED6BOMDCF
121F67	N16L0080/000AAAAB000F0000	A15L0120/000AAAAA000A0000	RHZ42LREDCF
121F67-2995-481865C2	N16L0080/000AAAAB000F0000	A15L0120/000AAAAA000A0000	RHZ42LREDOMD71
121F67-2995-481865C2	N16L0080/000AAAAD000A0000	A15L0120/000AAAAA000F0000	RHZ42LREDOMDCF
121G2320-852023-483541B5	N16L0080/000AAAAD000A0000	A15L0120/000AAAAA000F0000	RHZ42LREDOMDLUFTCF
121G2320-852023-483541B5	N16L0080/000AAAAE000A0000	A15L0120/080AAAAA000A0000	RHZ42LREDVITCF
121G2320-852023-483541P8	N16L0080/000AAAAE000A0000	A15L0120/080AAAAA000A0000	RHZ42LREDVITOMDCF

121G2320-852023-483541P8	N16L0080/000AAAAE000F0000	A15L0125/000AAAAA000A0000	RHZ42ZLRED0.5BCF
121G2320-852023-483541T1	N16L0080/000AAAAE000F0000	A15L0125/000AAAAA000A0000	RHZ42ZLREDCF
121G2320-852023-483541T1	N16L0100/000AAAAA000A0000	A15L0125/125AAAAA000A0000	RHZK06LMED0.5BVITCF
121G2320-876024-483541B5	N16L0100/000AAAAA000A0000	A15L0125/125AAAAA000A0000	RHZK15LMED0.5BVITCF
121G2320-876024-483541B5	N16L0100/000AAAAB000A0000	A15L0140/000AAAAA000A0000	RI1/2EDX1/2CF
121G2320-876024-483541P8	N16L0100/000AAAAB000A0000	A15L0140/000AAAAA000A0000	RI1/2EDX1/471
121G2320-876024-483541P8	N16L0100/000AAAAB000F0000	A15L0140/000AAAAA000F0000	RI1/2EDX1/4CF
121G2320-876024-483541T1	N16L0100/000AAAAB000F0000	A15L0140/000AAAAA000F0000	RI1/2EDX1/4CFX
121G2320-876024-483541T1	N16L0100/000AAAAE000A0000	A15L0140/000AAAAA0G0A0000	RI1/2EDX1/4VITCF
121G2520-852023-483541B5	N16L0100/000AAAAE000A0000	A15L0140/000AAAAA0G0A0000	RI1/2EDX1/871
121G2520-852023-483541B5	N16L0125/000AAAAA000A0000	A15L0140/010AAAAB0G0A0000	RI1/2EDX1/8CF
121G2520-852023-483541P8	N16L0125/000AAAAA000A0000	A15L0140/010AAAAB0G0A0000	RI1/2EDX1/8VITCF
121G2520-852023-483541P8	N16L0125/000AAAAE000A0000	A15L0150/000AAAAA000A0000	RI1/2EDX11/471
121G2520-852023-483541T1	N16L0125/000AAAAE000A0000	A15L0150/000AAAAA000A0000	RI1/2EDX11/4CF
121G2520-852023-483541T1	N16L0125/000AAAAE000F0000	A15L0150/000AAAAA000F0000	RI1/2EDX171
121G2520-876024-483541B7	N16L0125/000AAAAE000F0000	A15L0150/000AAAAA000F0000	RI1/2EDX1CF
121G2520-876024-483541B7	N16L0150/000AAAAE000A0000	A15L0150/000AAAAA0S0A0000	RI1/2EDX1VITCF
121G2520-876024-483541P8	N16L0150/000AAAAE000A0000	A15L0150/000AAAAA0S0A0000	RI1/2EDX3/471
121G2520-876024-483541P8	N16L0160/000AAAAE000A0000	A15L0153/050ACABABG0A0000	RI1/2EDX3/4CF
121G2520-876024-483541T1	N16L0160/000AAAAE000A0000	A15L0153/050ACABABG0A0000	RI1/2EDX3/4VITCF
121G2520-876024-483541T1	N16L0200/000AAAAB000F0000	A15L0160/000AAAAA000A0000	RI1/2EDX3/871
121G2523-852023-483824P8	N16L0200/000AAAAB000F0000	A15L0160/000AAAAA000A0000	RI1/2EDX3/8CF
121G2523-852023-483824P8	N16L0250/000AAAAA000A0000	A15L0160/000AAABA00YA0000	RI1/2EDX3/8MS
121G2523-852023-483824T1	N16L0250/000AAAAA000A0000	A15L0160/000AAABA00YA0000	RI1/2EDX3/8VITCF
121G2523-852023-483824T1	N16L0380/000AAAAD000F0000	A15L0160/000ADAAA000A0000	RI1/2NPTX1/471X
121G2523-852025-483824P8	N16L0380/000AAAAD000F0000	A15L0160/000ADAAA000A0000	RI1/2NPTX14X1.5CFX
121G2523-852025-483824P8	N16L0500/000AAAAA000A0000	A15L0170/000AAAAA000A0000	RI1/2X1/271X
121G2523-876024-483824B5	N16L0500/000AAAAA000A0000	A15L0170/000AAAAA000A0000	RI1/2X1/2CFX
121G2523-876024-483824B5	N16M0005/000AAAAA000A0000	A15L0175/000AAAAA000A0000	RI1/2X1/471X
121G2523-876024-483824P8	N16M0005/000AAAAA000A0000	A15L0175/000AAAAA000A0000	RI1/2X1/4CFX
121G2523-876024-483824P8	N16M0010/000AAAAA000A0000	A15L0175/000ABABA000A0000	RI1/2X1/4MSX
121G2523-876024-483824T1	N16M0010/000AAAAA000A0000	A15L0175/000ABABA000A0000	RI1/2X1/4X
121G2523-876024-483824T1	N16M0010/000AAAAB000F0000	A15L0180/000AAAAA000A0000	RI1/2X1/871X
121K01	N16M0010/000AAAAB000F0000	A15L0180/000AAAAA000A0000	RI1/2X1/8CFX
121K01	N16M0010/000AAAAD000A0000	A15L0200/000AAAAA000A0000	RI1/2X1/8MSX
121K0103	N16M0010/000AAAAD000A0000	A15L0200/000AAAAA000A0000	RI1/2X11/471X
121K0103	N16M0010/000AAAAD000F0000	A15L0200/000AAAAA000G0000	RI1/2X11/4CFX
121K0103-2995-481865C2	N16M0010/000AAAAD000F0000	A15L0200/000AAAAA000G0000	RI1/2X171X
121K0103-2995-481865C2	N16M0010/000AAAAE000A0000	A15L0200/000AAAAA000X0000	RI1/2X18X1.5CFX
121K0103-4270-481000C1	N16M0010/000AAAAE000A0000	A15L0200/000AAAAA000X0000	RI1/2X1CFX
121K0103-4270-481000C1	N16M0012/000AAAAA000A0000	A15L0200/000AAAAA0S0A0000	RI1/2X3/471X
121K0106	N16M0012/000AAAAA000A0000	A15L0200/000AAAAA0S0A0000	RI1/2X3/4CFX
121K0106	N16M0012/000AAAAD000A0000	A15L0200/000AABAA000A0000	RI1/2X3/4MSX
121K0106-2995-4818653D	N16M0012/000AAAAD000A0000	A15L0200/000AABAA000A0000	RI1/2X3/4X
121K0106-2995-4818653D	N16M0012/000AAAAE000A0000	A15L0200/000ACAAA000A0000	RI1/2X3/871X
121K0106-2995-481865C2	N16M0012/000AAAAE000A0000	A15L0200/000ACAAA000A0000	RI1/2X3/8CFX
121K0106-2995-481865C2	N16M0015/000AAAAA000A0000	A15L0200/000ACABA000A0000	RI1/2X3/8MSX
121K0113-2995-483510S5	N16M0015/000AAAAA000A0000	A15L0200/000ACABA000A0000	RI1/4EDX1/271
121K0113-2995-483510S5	N16M0015/000AAAAD000A0000	A15L0210/000AAAAA000F0000	RI1/4EDX1/2CF
121K01-2995-4818653D	N16M0015/000AAAAD000A0000	A15L0210/000AAAAA000F0000	RI1/4EDX1/2VITCF
121K01-2995-4818653D	N16M0020/000AAAAA000A0000	A15L0216/000AAAAA000A0000	RI1/4EDX1/471
121K01-2995-481865C2	N16M0020/000AAAAA000A0000	A15L0216/000AAAAA000A0000	RI1/4EDX1/871
121K01-2995-481865C2	N16M0020/000AAAAB000F0000	A15L0220/000AAAAA000A0000	RI1/4EDX1/8CF

121K01-2995-482725C2	N16M0020/000AAAAB000F0000	A15L0220/000AAAAA000A0000	RI1/4EDX1/8VITCF
121K01-2995-482725C2	N16M0025/000AAAAA000A0000	A15L0225/000AAAAA000A0000	RI1/4EDX3/471
121K01-2995-483510S6	N16M0025/000AAAAA000A0000	A15L0225/000AAAAA000A0000	RI1/4EDX3/4CF
121K01-2995-483510S6	N16M0025/000AAAAB000A0000	A15L0250/000AAAAA000A0000	RI1/4EDX3/4VITCF
121K01-2995-491514C2	N16M0025/000AAAAB000A0000	A15L0250/000AAAAA000A0000	RI1/4EDX3/871
121K01-2995-491514C2	N16M0025/000AAAAE000A0000	A15L0250/000AAAAA000X0000	RI1/4EDX3/8CF
121K01-2995-495870C2	N16M0025/000AAAAE000A0000	A15L0250/000AAAAA000X0000	RI1/4EDX3/8VITCF
121K01-2995-495870C2	N16M0030/000AAAAA000A0000	A15L0250/000ACABA000F0000	RI1/4NPTX1/4CFX
121K01-4270-481000C2	N16M0030/000AAAAA000A0000	A15L0250/000ACABA000F0000	RI1/4NPTX1/8NPTCFX
121K01-4270-481000C2	N16M0030/000AAAAB000A0000	A15L0250/000ADAAA000A0000	RI1/4X1/271X
121K01-492070C2	N16M0030/000AAAAB000A0000	A15L0250/000ADAAA000A0000	RI1/4X1/2CFX
121K01-492070C2	N16M0030/000AAAAB000F0000	A15L0260/000AAAAA000A0000	RI1/4X1/2MSX
121K01-492070P2	N16M0030/000AAAAB000F0000	A15L0260/000AAAAA000A0000	RI1/4X1/871X
121K01-492070P2	N16M0030/000AAAAE000A0000	A15L0300/000AAAAA000A0000	RI1/4X1/8CFX
121K01-492190C2	N16M0030/000AAAAE000A0000	A15L0300/000AAAAA000A0000	RI1/4X1/8MSX
121K01-492190C2	N16M0030/000AAAAE000F0000	A15L0300/000AAAAA000F0000	RI1/4X3/471X
121K01-495905C2	N16M0030/000AAAAE000F0000	A15L0300/000AAAAA000F0000	RI1/4X3/4CFX
121K01-495905C2	N16M0040/000AAAAA000A0000	A15L0300/000AAAAA000G0000	RI1/4X3/4MSX
121K01-495905F4	N16M0040/000AAAAA000A0000	A15L0300/000AAAAA000G0000	RI1/4X3/871X
121K01-495905F4	N16M0040/000AAAABC00A0000	A15L0320/000AAAAA000A0000	RI1/4X3/8CFX
121K0150	N16M0040/000AAAABC00A0000	A15L0320/000AAAAA000A0000	RI1/4X3/8MSX
121K0150	N16M0040/000AAAAD000A0000	A15L0320/000AAAAA000F0000	RI1/8EDX1/471
121K0150-2995-481865C2	N16M0040/000AAAAD000A0000	A15L0320/000AAAAA000F0000	RI1/8EDX1/4CF
121K0150-2995-481865C2	N16M0050/000AAAAA000A0000	A15L0320/000AAAAA00YA0000	RI1/8EDX1/4VITCF
121K02	N16M0050/000AAAAA000A0000	A15L0320/000AAAAA00YA0000	RI1/8EDX3/871
121K02	N16M0050/000AAAAA000F0000	A15L0330/000AAAAA000A0000	RI1/8EDX3/8CF
121K02-2995-481865C1	N16M0050/000AAAAA000F0000	A15L0330/000AAAAA000A0000	RI1/8EDX3/8VITCF
121K02-2995-481865C1	N16M0050/000AAAAB000A0000	A15L0335/000AAAAA000A0000	RI1/8X1/471X
121K02-2995-481865C2	N16M0050/000AAAAB000A0000	A15L0335/000AAAAA000A0000	RI1/8X1/4CFX
121K02-2995-481865C2	N16M0050/000AAAAB000F0000	A15L0350/000AAAAA000A0000	RI1/8X1/4MSX
121K02-2995-483510S6	N16M0050/000AAAAB000F0000	A15L0350/000AAAAA000A0000	RI1/8X3/871X
121K02-2995-483510S6	N16M0050/000AAAAD000A0000	A15L0350/000AAAAA000G0000	RI1/8X3/8CFX
121K02-2995-492425C2	N16M0050/000AAAAD000A0000	A15L0350/000AAAAA000G0000	RI1/8X3/8MSX
121K02-2995-492425C2	N16M0050/000AAAAD000F0000	A15L0400/000AAAAA000A0000	RI11/2EDX1/271
121K02-2995-495880C2	N16M0050/000AAAAD000F0000	A15L0400/000AAAAA000A0000	RI11/2EDX1/2CF
121K02-2995-495880C2	N16M0050/000AAAAE000A0000	A15L0400/000AAAAA000F0000	RI11/2EDX1/2VITCF
121K02-4270-4810003D	N16M0050/000AAAAE000A0000	A15L0400/000AAAAA000F0000	RI11/2EDX11/471
121K02-4270-4810003D	N16M0050/000ABAAA000A0000	A15L0400/000AAAAA000G0000	RI11/2EDX11/4CF
121K02-4270-481000C2	N16M0050/000ABAAA000A0000	A15L0400/000AAAAA000G0000	RI11/2EDX11/4VITCF
121K02-4270-481000C2	N16M0060/000AAAAA000A0000	A15L0400/000AAAAA000X0000	RI11/2EDX171
121K02-4270-486265C2	N16M0060/000AAAAA000A0000	A15L0400/000AAAAA000X0000	RI11/2EDX1CF
121K02-4270-486265C2	N16M0060/000AAAAB000A0000	A15L0400/000AAAAA0S0A0078	RI11/2EDX1CFBP
121K02-495905C2	N16M0060/000AAAAB000A0000	A15L0400/000AAAAA0S0A0078	RI11/2EDX1VITCF
121K02-495905C2	N16M0060/000AAAAB000F0000	A15L0420/000AAAAA000A0000	RI11/2EDX3/471
121K0250-2995-481865C2	N16M0060/000AAAAB000F0000	A15L0420/000AAAAA000A0000	RI11/2EDX3/4CF
121K0250-2995-481865C2	N16M0060/000AAAAE000A0000	A15L0440/000AAAAA000A0000	RI11/2EDX3/4VITCF
121K0306-2995-481865A2	N16M0060/000AAAAE000A0000	A15L0440/000AAAAA000A0000	RI11/2X1/271X
121K0306-2995-481865A2	N16M0075/000AAAAA000A0000	A15L0450/000AAAAA000A0000	RI11/2X1/2CFX
121K0323	N16M0075/000AAAAA000A0000	A15L0450/000AAAAA000A0000	RI11/2X1/2MSX
121K0323	N16M0080/000AAAAA000A0000	A15L0450/000AAAAA000F0000	RI11/2X1/4CFX
121K0397	N16M0080/000AAAAA000A0000	A15L0450/000AAAAA000F0000	RI11/2X11/471X
121K0397	N16M0080/000AAAAB000A0000	A15L0500/000AAAAA000A0000	RI11/2X11/4CFX
121K0397-2995-482740C2	N16M0080/000AAAAB000A0000	A15L0500/000AAAAA000A0000	RI11/2X11/4MSX

121K0397-2995-482740C2	N16M0080/000AAAAB000F0000	A15L0500/000AAAAA000F0000	RI11/2X171X
121K0397-495900C2	N16M0080/000AAAAB000F0000	A15L0500/000AAAAA000F0000	RI11/2X1CFX
121K0397-495900C2	N16M0080/000AAAAD000A0000	A15L0500/000AAAAA00YA0000	RI11/2X1MSX
121K0397-495910N7	N16M0080/000AAAAD000A0000	A15L0500/000AAAAA00YA0000	RI11/2X1X
121K0397-495910N7	N16M0080/000AAAAE000A0000	A15L0540/000AAAAA000F0000	RI11/2X3/471X
121K0497	N16M0080/000AAAAE000A0000	A15L0540/000AAAAA000F0000	RI11/2X3/4CFX
121K0497	N16M0080/000AAAAE000F0000	A15L0550/000AAAAA000A0000	RI11/2X3/8CFX
121K0497-2995-482740C2	N16M0080/000AAAAE000F0000	A15L0550/000AAAAA000A0000	RI11/4EDX1/271
121K0497-2995-482740C2	N16M0100/000AAAAA000A0000	A15L0550/030FAABA000A0000	RI11/4EDX1/2CF
121K0601	N16M0100/000AAAAA000A0000	A15L0550/030FAABA000A0000	RI11/4EDX1/2VITCF
121K0601	N16M0100/000AAAAB000A0000	A15L0550/030FBABA000A0000	RI11/4EDX11/271
121K0601-2995-481865C2	N16M0100/000AAAAB000A0000	A15L0550/030FBABA000A0000	RI11/4EDX11/2CF
121K0601-2995-481865C2	N16M0100/000AAAAB000F0000	A15L0570/000AAAAA000A0000	RI11/4EDX11/2VITCF
121K0605-2995-481865C2	N16M0100/000AAAAB000F0000	A15L0570/000AAAAA000A0000	RI11/4EDX171
121K0605-2995-481865C2	N16M0125/000AAAAA000A0000	A15L0580/000AAAAA000A0000	RI11/4EDX1CF
121K0706	N16M0125/000AAAAA000A0000	A15L0580/000AAAAA000A0000	RI11/4EDX1VITCF
121K0706	N16M0125/000AAAAB000F0000	A15L0600/000AAAAA000A0000	RI11/4EDX3/471
121K0706-2995-481865C2	N16M0125/000AAAAB000F0000	A15L0600/000AAAAA000A0000	RI11/4EDX3/4CF
121K0706-2995-481865C2	N16M0150/000AAAAA000A0000	A15L0600/000AAAAA000F0000	RI11/4EDX3/4VITCF
121K0706-4270-486265C2	N16M0150/000AAAAA000A0000	A15L0600/000AAAAA000F0000	RI11/4EDX3/871
121K0706-4270-486265C2	N16M0150/000AAAAB000A0000	A15L0600/000FAAAA000A0000	RI11/4EDX3/8CF
121K1302	N16M0150/000AAAAB000A0000	A15L0600/000FAAAA000A0000	RI11/4X1/271X
121K1302	N16M0150/000AAAAD000A0000	A15L0600/098AAAAA000A0000	RI11/4X1/2CFX
121K1302-2995-4818653D	N16M0150/000AAAAD000A0000	A15L0600/098AAAAA000A0000	RI11/4X1/2MSX
121K1302-2995-4818653D	N16M0160/000AAAAD000A0000	A15L0625/000AAAAA000A0000	RI11/4X11/271X
121K1302-2995-481865A2	N16M0160/000AAAAD000A0000	A15L0625/000AAAAA000A0000	RI11/4X11/2CFX
121K1302-2995-481865A2	N16M0250/000AAAAB000F0000	A15L0625/100AAAAA000A0000	RI11/4X171X
121K1302-2995-481865C2	N16M0250/000AAAAB000F0000	A15L0625/100AAAAA000A0000	RI11/4X1CFX
121K1302-2995-481865C2	N16N0010/000AAAAA000A0000	A15L0625/100AAAAA000G0000	RI11/4X1MSX
121K1302-2995-483510S6	N16N0010/000AAAAA000A0000	A15L0625/100AAAAA000G0000	RI11/4X3/471X
121K1302-2995-483510S6	N16N0010/000AAAAA000F0000	A15L0630/000AAAAA000A0000	RI11/4X3/4CFX
121K2423-852023-483824B7	N16N0010/000AAAAA000F0000	A15L0630/000AAAAA000A0000	RI11/4X3/4MSX
121K2423-852023-483824B7	N16N0010/000AAAAB000F0000	A15L0630/000AAAAA000F0000	RI12X1.5/R1/4CFX
121K2423-852023-483824P8	N16N0010/000AAAAB000F0000	A15L0630/000AAAAA000F0000	RI12X1.5EDX1/4CF
121K2423-852023-483824P8	N16N0010/000AAAAD000A0000	A15L0640/000AAAAB0A0A0000	RI12X1.5EDX1/8CF
121K2423-852023-483824T1	N16N0010/000AAAAD000A0000	A15L0640/000AAAAB0A0A0000	RI14X1.5/1/4CFX
121K2423-852023-483824T1	N16N0010/000AAAAD000X0000	A15L0650/000AAAAA000A0000	RI14X1.5EDX1/4CF
121K2423-876024-483824B5	N16N0010/000AAAAD000X0000	A15L0650/000AAAAA000A0000	RI16X1.5/1/4CFX
121K2423-876024-483824B5	N16N0015/000AAAAA000A0000	A15L0650/000AAAAA0G0A0000	RI16X1.5/12X1.5CFX
121K2423-876024-483824B7	N16N0015/000AAAAA000A0000	A15L0650/000AAAAA0G0A0000	RI16X1.5EDX1/2CF
121K2423-876024-483824B7	N16N0015/000AAAAB000A0000	A15L0700/000AAAAA000A0000	RI16X1.5EDX1/4CF
121K2423-876024-483824P8	N16N0015/000AAAAB000A0000	A15L0700/000AAAAA000A0000	RI18X1.5/1/4CFX
121K2423-876024-483824P8	N16N0015/000AAAAD000A0000	A15L0700/000AAAAA000F0000	RI18X1.5/12X1.5CFX
121K2423-876024-483824T1	N16N0015/000AAAAD000A0000	A15L0700/000AAAAA000F0000	RI18X1.5ED/22X1.5CF
121K2423-876024-483824T1	N16N0015/000AAAAE000A0000	A15L0700/000AAAAA0G0A0000	RI18X1.5EDX1/4CF
121K3106	N16N0015/000AAAAE000A0000	A15L0700/000AAAAA0G0A0000	RI1AX1/2CFX
121K3106	N16N0015/030AAAAE000A0000	A15L0700/000AAAAA0S0A0000	RI1EDX1/231B71
121K3106-2995-4818653D	N16N0015/030AAAAE000A0000	A15L0700/000AAAAA0S0A0000	RI1EDX1/271
121K3106-2995-4818653D	N16N0020/000AAAAA000A0000	A15L0700/000AAAAA0S0A0078	RI1EDX1/2CF
121K3106-2995-492425C2	N16N0020/000AAAAA000A0000	A15L0700/000AAAAA0S0A0078	RI1EDX1/2VITCF
121K3106-2995-492425C2	N16N0020/000AAAAB000F0000	A15L0705/000AAAAA000A0000	RI1EDX1/471
121K3206	N16N0020/000AAAAB000F0000	A15L0705/000AAAAA000A0000	RI1EDX1/4CF
121K3206	N16N0025/000AAAAA000A0000	A15L0705/000AAAAB000A0000	RI1EDX1/4VITCF

121K3206-2995-481865C2	N16N0025/000AAAAA000A0000	A15L0705/000AAAAB000A0000	RI1EDX11/271
121K3206-2995-481865C2	N16N0025/000AAAAA000F0000	A15L0720/000AAAAA000A0000	RI1EDX11/2CF
121K3206-2995-495870C2	N16N0025/000AAAAA000F0000	A15L0720/000AAAAA000A0000	RI1EDX11/2VITCF
121K3206-2995-495870C2	N16N0025/000AAAAB000A0000	A15L0740/000AAAAA000A0000	RI1EDX11/471
121K3206-4270-481000C2	N16N0025/000AAAAB000A0000	A15L0740/000AAAAA000A0000	RI1EDX11/4CF
121K3206-4270-481000C2	N16N0025/000AAAAB000F0000	A15L0750/000AAAAA000A0000	RI1EDX11/4VITCF
121K3206-492670C2	N16N0025/000AAAAB000F0000	A15L0750/000AAAAA000A0000	RI1EDX3/471
121K3206-492670C2	N16N0025/000AAAAD000A0000	A15L0750/000AAAAB000A0000	RI1EDX3/4CF
121K3303	N16N0025/000AAAAD000A0000	A15L0750/000AAAAB000A0000	RI1EDX3/4MS
121K3303	N16N0025/000AAAAE000A0000	A15L0750/000ACAAB000A0000	RI1EDX3/4VITCF
121K3306	N16N0025/000AAAAE000A0000	A15L0750/000ACAAB000A0000	RI1EDX3/871
121K3306	N16N0025/000AABAA000A0000	A15L0750/000ACAAB0A0A0000	RI1EDX3/8CF
121K3306-2995-4818653D	N16N0025/000AABAA000A0000	A15L0750/000ACAAB0A0A0000	RI1EDX3/8VITCF
121K3306-2995-4818653D	N16N0025/000AABAD000A0000	A15L0750/000ACABB000A0000	RI1X1/271X
121K3306-2995-481865C1	N16N0025/000AABAD000A0000	A15L0750/000ACABB000A0000	RI1X1/2CFX
121K3306-2995-481865C1	N16N0025/000ABAAA000F0000	A15L0790/000AAAAA000A0000	RI1X1/2MSX
121K3306-2995-481865C2	N16N0025/000ABAAA000F0000	A15L0790/000AAAAA000A0000	RI1X1/471X
121K3306-2995-481865C2	N16N0030/000AAAAA000A0000	A15L0800/000AAAAA000A0000	RI1X1/4CFX
121K3306-2995-492453A2	N16N0030/000AAAAA000A0000	A15L0800/000AAAAA000A0000	RI1X1/4X
121K3306-2995-492453A2	N16N0030/000AAAAA000F0000	A15L0800/000AAAAA000G0000	RI1X11/271X
121K3306-4270-481000C2	N16N0030/000AAAAA000F0000	A15L0800/000AAAAA000G0000	RI1X11/2CFX
121K3306-4270-481000C2	N16N0030/000AAAAD000A0000	A15L0800/000AAAAA0G0A0000	RI1X11/471X
121K3306-4270-481044F4	N16N0030/000AAAAD000A0000	A15L0800/000AAAAA0G0A0000	RI1X11/4CFX
121K3306-4270-481044F4	N16N0030/000AAAAD000F0000	A15L0800/000AAABA000A0000	RI1X11/4MSX
121K3306-4270-486265A7	N16N0030/000AAAAD000F0000	A15L0800/000AAABA000A0000	RI1X3/471X
121K3306-4270-486265A7	N16N0040/000AAAAA000A0000	A15L0800/000FAAAA000A0000	RI1X3/4CFX
121K3306-4270-486265C2	N16N0040/000AAAAA000A0000	A15L0800/000FAAAA000A0000	RI1X3/4MSX
121K3306-4270-486265C2	N16N0040/000AAAAB000F0000	A15L0820/030FBABA000A0000	RI1X3/871X
121K6220-852023-483541P8	N16N0040/000AAAAB000F0000	A15L0820/030FBABA000A0000	RI1X3/8CFX
121K6220-852023-483541P8	N16N0040/000AAAAD000A0000	A15L0825/000AAAAA0G0A0000	RI1X3/8MSX
121K6220-852023-483541T1	N16N0040/000AAAAD000A0000	A15L0825/000AAAAA0G0A0000	RI20X1.5EDX1/4CF
121K6220-852023-483541T1	N16N0040/000AAAAE000A0000	A15L0845/000AAAAA000A0000	RI22X1.5/1/4CFX
121K6220-876024-483541P8	N16N0040/000AAAAE000A0000	A15L0845/000AAAAA000A0000	RI22X1.5/14X1.5CFX
121K6220-876024-483541P8	N16N0050/000AAAAA000A0000	A15L0850/000AAAAA000A0000	RI22X1.5EDX1/2CF
121K6220-876024-483541T1	N16N0050/000AAAAA000A0000	A15L0850/000AAAAA000A0000	RI26X1.5/18X1.5CFX
121K6220-876024-483541T1	N16N0050/000AAAAB000A0000	A15L0850/000AAAAA0G0A0000	RI26X1.5ED/22X1.5CF
121K6423-852023-483824B7	N16N0050/000AAAAB000A0000	A15L0850/000AAAAA0G0A0000	RI2EDX11/271
121K6423-852023-483824B7	N16N0050/000AAAAB000F0000	A15L0900/000AAAAA000A0000	RI2EDX11/2CF
121K6423-852023-483824P8	N16N0050/000AAAAB000F0000	A15L0900/000AAAAA000A0000	RI2EDX11/2VITCF
121K6423-852023-483824P8	N16N0050/000AAAAD000A0000	A15L0900/000AAAAA0G0A0000	RI2EDX11/471
121K6423-852023-483824T1	N16N0050/000AAAAD000A0000	A15L0900/000AAAAA0G0A0000	RI2EDX11/4CF
121K6423-852023-483824T1	N16N0050/000AAAAE000A0000	A15L0920/000AAAAA0G0A0000	RI2EDX171
121K6423-876024-483824P8	N16N0050/000AAAAE000A0000	A15L0920/000AAAAA0G0A0000	RI2EDX1CF
121K6423-876024-483824P8	N16N0060/000AAAAA000A0000	A15L0950/000AAAAA000G0000	RI2EDX1VITCF
121K6423-876024-483824T1	N16N0060/000AAAAA000A0000	A15L0950/000AAAAA000G0000	RI2EDX3/4CF
121K6423-876024-483824T1	N16N0060/000AAAAB000F0000	A15L0950/000AAAAA0G0A0000	RI2X11/271X
121KS8052-2995-481865A2	N16N0060/000AAAAB000F0000	A15L0950/000AAAAA0G0A0000	RI2X11/2CFX
121KS8052-2995-481865A2	N16N0060/000AAAAD000A0000	A15L1000/000AAAAA000A0000	RI2X11/2X
121M13	N16N0060/000AAAAD000A0000	A15L1000/000AAAAA000A0000	RI2X11/4CFX
121M13	N16N0060/000AAAAD000F0000	A15L1000/000AAAAAB00A0000	RI2X1CFX
121M13-8993-481045C1	N16N0060/000AAAAD000F0000	A15L1000/000AAAAAB00A0000	RI2X3/471X
121M13-8993-481045C1	N16N0070/000AAAAA000A0000	A15L1000/000AAAAB000A0000	RI3/4AX1/2CFX
121M13-8993-481180C2	N16N0070/000AAAAA000A0000	A15L1000/000AAAAB000A0000	RI3/4EDX1/271

121M13-8993-481180C2	N16N0080/000AAAAA000A0000	A15L1000/000AAAAB0A0A0000	RI3/4EDX1/2CF
121M13-8993-4889800A	N16N0080/000AAAAA000A0000	A15L1000/000AAAAB0A0A0000	RI3/4EDX1/2MS
121M13-8993-4889800A	N16N0080/000AAAAB000A0000	A15L1040/000AAAAA000A0000	RI3/4EDX1/2VITCF
121M13-8993-4889803D	N16N0080/000AAAAB000A0000	A15L1040/000AAAAA000A0000	RI3/4EDX1/471
121M13-8993-4889803D	N16N0080/000AAAAB000F0000	A15L1060/000ABAAA000A0000	RI3/4EDX1/4CF
121M13-8993-488980A2	N16N0080/000AAAAB000F0000	A15L1060/000ABAAA000A0000	RI3/4EDX1/4VITCF
121M13-8993-488980A2	N16N0080/000AAAAD000A0000	A15L1100/000AAAAA000A0000	RI3/4EDX11/271
121M13-8993-488980C2	N16N0080/000AAAAD000A0000	A15L1100/000AAAAA000A0000	RI3/4EDX11/2CF
121M13-8993-488980C2	N16N0080/000AAAAE000A0000	A15L1300/000ABAAA000A0000	RI3/4EDX11/2VITCF
121M14	N16N0080/000AAAAE000A0000	A15L1300/000ABAAA000A0000	RI3/4EDX11/471
121M14	N16N0100/000AAAAA000A0000	A15L1500/000AAAAAB00A0000	RI3/4EDX11/4CF
121M14-8993-481180C2	N16N0100/000AAAAA000A0000	A15L1500/000AAAAAB00A0000	RI3/4EDX171
121M14-8993-481180C2	N16N0100/000AAAAB000A0000	A15M0010/000AAAAA000A0000	RI3/4EDX18X1.571
121M14-8993-488980C2	N16N0100/000AAAAB000A0000	A15M0010/000AAAAA000A0000	RI3/4EDX1CF
121M14-8993-488980C2	N16N0100/000AAAAB000F0000	A15M0020/000AAAAA000A0000	RI3/4EDX3/871
121V5106	N16N0100/000AAAAB000F0000	A15M0020/000AAAAA000A0000	RI3/4EDX3/8CF
121V5106	N16N0100/000AAAAD000A0000	A15M0025/000AAAAA000A0000	RI3/4EDX3/8CFX
121V5106-2161-496193C2	N16N0100/000AAAAD000A0000	A15M0025/000AAAAA000A0000	RI3/4EDX3/8VITCF
121V5106-2161-496193C2	N16N0100/000AAAAE000A0000	A15M0030/000AAAAA000A0000	RI3/4NPTX1/2NPTCFX
121V5106-2995-481865C2	N16N0100/000AAAAE000A0000	A15M0030/000AAAAA000A0000	RI3/4X1/271X
121V5106-2995-481865C2	N16N0150/000AAAAA000A0000	A15M0040/000AAAAA000A0000	RI3/4X1/2CFX
121V5106-2995-4827253D	N16N0150/000AAAAA000A0000	A15M0040/000AAAAA000A0000	RI3/4X1/2MSX
121V5106-2995-4827253D	N16N0150/000AAAAD000A0000	A15M0050/000AAAAA000A0000	RI3/4X1/2X
121V5106-4270-481000C2	N16N0150/000AAAAD000A0000	A15M0050/000AAAAA000A0000	RI3/4X1/471X
121V5106-4270-481000C2	N16N0150/000AAAAE000A0000	A15M0050/000AAAAA000F0000	RI3/4X1/4CFX
121V5106-4270-486265C2	N16N0150/000AAAAE000A0000	A15M0050/000AAAAA000F0000	RI3/4X1/4MSX
121V5106-4270-486265C2	N16N0160/000AAAAA000A0000	A15M0050/000AAAAC000A0000	RI3/4X11/271X
121V5106-8520-486265C1	N16N0160/000AAAAA000A0000	A15M0050/000AAAAC000A0000	RI3/4X11/2CFX
121V5106-8520-486265C1	N16N0160/000AAAAB000F0000	A15M0060/000AAAAA000A0000	RI3/4X11/471X
121V5108	N16N0160/000AAAAB000F0000	A15M0060/000AAAAA000A0000	RI3/4X11/4CFX
121V5108	N16N0160/000AAAAD000A0000	A15M0060/000AAAAA000F0000	RI3/4X171X
121V5108-4270-481044A2	N16N0160/000AAAAD000A0000	A15M0060/000AAAAA000F0000	RI3/4X1CFX
121V5108-4270-481044A2	N16N0175/000AAAAB000A0000	A15M0070/000AAAAA000A0000	RI3/4X1MSX
121V5112	N16N0175/000AAAAB000A0000	A15M0070/000AAAAA000A0000	RI3/4X3/871X
121V5112	N16N0200/000AAAAB000A0000	A15M0075/000AAAAA000A0000	RI3/4X3/8CFX
121V5112-2995-4818653D	N16N0200/000AAAAB000A0000	A15M0075/000AAAAA000A0000	RI3/4X3/8MSX
121V5112-2995-4818653D	N16N0205/000AAAAE000A0000	A15M0080/000AAAAA000A0000	RI3/8EDX1/271
121V5112-2995-481865C2	N16N0205/000AAAAE000A0000	A15M0080/000AAAAA000A0000	RI3/8EDX1/2CF
121V5112-2995-481865C2	N16N0320/000AAAAB000F0000	A15M0080/000AAAAA000X0000	RI3/8EDX1/2VITCF
121V5112-2995-483510S6	N16N0320/000AAAAB000F0000	A15M0080/000AAAAA000X0000	RI3/8EDX1/471
121V5112-2995-483510S6	N16N0500/000AAAAE000A0000	A15M0080/000AAAAB000A0000	RI3/8EDX1/4CF
121V5112-4833713D	N16N0500/000AAAAE000A0000	A15M0080/000AAAAB000A0000	RI3/8EDX1/4MS
121V5112-4833713D	N16N0550/000AAAAE000A0000	A15M0080/000AAABC000A0000	RI3/8EDX1/4VITCF
121V5112-483371C1	N16N0550/000AAAAE000A0000	A15M0080/000AAABC000A0000	RI3/8EDX1/871
121V5112-483371C1	N16P0005/000AAAAE000A0000	A15M0080/000ABAAA000A0000	RI3/8EDX1/8CF
121V5163	N16P0005/000AAAAE000A0000	A15M0080/000ABAAA000A0000	RI3/8EDX1/8VITCF
121V5163	N16P0010/000AAAAD000A0000	A15M0100/000AAAAA000A0000	RI3/8EDX3/471
121V5163-2995-481865A9	N16P0010/000AAAAD000A0000	A15M0100/000AAAAA000A0000	RI3/8EDX3/4CF
121V5163-2995-481865A9	N16P0015/000AAAAB000A0000	A15M0100/000AAAAA000X0000	RI3/8EDX3/4VITCF
121V5163-2995-481865C2	N16P0015/000AAAAB000A0000	A15M0100/000AAAAA000X0000	RI3/8X1/271X
121V5163-2995-481865C2	N16P0015/000AAAAB000F0000	A15M0100/000AAAAA0M0A0000	RI3/8X1/2CFX
121V5163-4270-486265C2	N16P0015/000AAAAB000F0000	A15M0100/000AAAAA0M0A0000	RI3/8X1/2MSX
121V5163-4270-486265C2	N16P0015/000AAAAE000A0000	A15M0100/000ABAAA000A0000	RI3/8X1/42SF480CF

121V5163-8520-486265C1	N16P0015/000AAAAE000A0000	A15M0100/000ABAAA000A0000	RI3/8X1/471X
121V5163-8520-486265C1	N16P0025/000AAAAA000A0000	A15M0105/000AAAAA000A0000	RI3/8X1/4CFX
121V5206	N16P0025/000AAAAA000A0000	A15M0105/000AAAAA000A0000	RI3/8X1/4MSX
121V5206	N16P0025/000AAAAB000A0000	A15M0105/000AAAAA000F0000	RI3/8X1/4X
121V5206-2995-4818653D	N16P0025/000AAAAB000A0000	A15M0105/000AAAAA000F0000	RI3/8X1/871X
121V5206-2995-4818653D	N16P0025/000AAAAB000F0000	A15M0110/000AAAAA000A0000	RI3/8X1/8CFX
121V5206-2995-481865C2	N16P0025/000AAAAB000F0000	A15M0110/000AAAAA000A0000	RI3/8X3/471X
121V5206-2995-481865C2	N16P0025/000AAAAD000A0000	A15M0120/000AAAAA000A0000	RI3/8X3/4CFX
121V5206-2995-482725A2	N16P0025/000AAAAD000A0000	A15M0120/000AAAAA000A0000	RI3/8X3/4MSX
121V5206-2995-482725A2	N16P0025/000AAAAE000A0000	A15M0125/000AAAAA000A0000	RINOX40
121V5206-2995-483510S6	N16P0025/000AAAAE000A0000	A15M0125/000AAAAA000A0000	RJH-062M
121V5206-2995-483510S6	N16P0030/000AAAAA000A0000	A15M0140/000AAAAA000A0000	RJH-062M
121V5206-4270-4810003D	N16P0030/000AAAAA000A0000	A15M0140/000AAAAA000A0000	RK 10012
121V5206-4270-4810003D	N16P0030/000AAAAD000A0000	A15M0140/000AAAAA000F0000	RK 10109
121V5206-4270-481000C2	N16P0030/000AAAAD000A0000	A15M0140/000AAAAA000F0000	RK 10110
121V5206-4270-481000C2	N16P0040/000AAAAA000A0000	A15M0140/010AAAAB000A0000	RK 10215
121V5206-4270-486265A7	N16P0040/000AAAAA000A0000	A15M0140/010AAAAB000A0000	RK 10503
121V5206-4270-486265A7	N16P0040/000AAAAE000A0000	A15M0150/000AAAAA000A0000	RK 11005/A
121V5212	N16P0040/000AAAAE000A0000	A15M0150/000AAAAA000A0000	RK 11028B
121V5212	N16P0050/000AAAAA000A0000	A15M0150/000AAAAA000F0000	RK 11037A
121V5212-2995-481865C2	N16P0050/000AAAAA000A0000	A15M0150/000AAAAA000F0000	RK 11-1404
121V5212-2995-481865C2	N16P0050/000AAAAA000F0000	A15M0150/000ABAAA000F0000	RK 11-1570
121V5212-2995-492425C2	N16P0050/000AAAAA000F0000	A15M0150/000ABAAA000F0000	RK 11-1606-1
121V5212-2995-492425C2	N16P0050/000AAAAB000A0000	A15M0150/060AAAAA000A0000	RK 11-1669
121V5212-4270-481000C2	N16P0050/000AAAAB000A0000	A15M0150/060AAAAA000A0000	RK 11-1679
121V5212-4270-481000C2	N16P0050/000AAAAB000F0000	A15M0160/000AAAAA000A0000	RK 11-1699
121V5212-4270-486265C2	N16P0050/000AAAAB000F0000	A15M0160/000AAAAA000A0000	RK 11-1767-01
121V5212-4270-486265C2	N16P0050/000AAAAD000A0000	A15M0160/000AAAAA000X0000	RK 11-1800-02
121V5212-492190C2	N16P0050/000AAAAD000A0000	A15M0160/000AAAAA000X0000	RK 11-1927-01
121V5212-492190C2	N16P0050/000AAAAD000F0000	A15M0160/000AAAAABA0A0000	RK 11-1933-04
121V5263	N16P0050/000AAAAD000F0000	A15M0160/000AAAAABA0A0000	RK 11-1938
121V5263	N16P0060/000AAAAA000A0000	A15M0180/000AAAAA000A0000	RK 11-1939
121V5263-2995-481865C2	N16P0060/000AAAAA000A0000	A15M0180/000AAAAA000A0000	RK 11-1945
121V5263-2995-481865C2	N16P0060/000AAAAD000A0000	A15M0180/000AAAAA000X0000	RK 11-1952
121V5263-4270-486265F4	N16P0060/000AAAAD000A0000	A15M0180/000AAAAA000X0000	RK 11200
121V5263-4270-486265F4	N16P0075/000AAAAD000A0000	A15M0190/000AAAAA000A0000	RK 11341
121V5306	N16P0075/000AAAAD000A0000	A15M0190/000AAAAA000A0000	RK 11542
121V5306	N16P0080/000AAAAA000A0000	A15M0200/000AAAAA000A0000	RK 11734
121V5306-2995-4818653D	N16P0080/000AAAAA000A0000	A15M0200/000AAAAA000A0000	RK 11734-01
121V5306-2995-4818653D	N16P0080/000AAAAD000A0000	A15M0200/000AAAAA000X0000	RK 11734-03
121V5306-2995-481865C2	N16P0080/000AAAAD000A0000	A15M0200/000AAAAA000X0000	RK 11780
121V5306-2995-481865C2	N16P0080/000AAAAE000A0000	A15M0200/000AAAAABE0A0000	RK 11861
121V5306-2995-481865J3	N16P0080/000AAAAE000A0000	A15M0200/000AAAAABE0A0000	RK 11862
121V5306-2995-481865J3	N16P0100/000AAAAA000A0000	A15M0200/000AAAAABG0A0000	RK 11868
121V5306-4270-486265C2	N16P0100/000AAAAA000A0000	A15M0200/000AAAAABG0A0000	RK 12041
121V5306-4270-486265C2	N16P0100/000AAAAB000F0000	A15M0200/000AAABA000A0000	RK 12963
121V5363	N16P0100/000AAAAB000F0000	A15M0200/000AAABA000A0000	RK 14321
121V5363	N16P0100/000AAAAD000A0000	A15M0200/000FAAAA000A0000	RK 15010B
121V5363-2995-4818653D	N16P0100/000AAAAD000A0000	A15M0200/000FAAAA000A0000	RK 15013D
121V5363-2995-4818653D	N16P0125/000AAAAA000A0000	A15M0200/150AAAAA000A0000	RK 15035
121V5363-2995-481865A5	N16P0125/000AAAAA000A0000	A15M0200/150AAAAA000A0000	RK 15078
121V5363-2995-481865A5	N16P0125/000AAAAD000A0000	A15M0220/100AAAAA000A0000	RK 15081
121V5363-2995-481865C2	N16P0125/000AAAAD000A0000	A15M0220/100AAAAA000A0000	RK 15211

121V5363-2995-481865C2	N16P0160/000AAAAA000A0000	A15M0250/000AAAAA000A0000	RK 15279-01
121V5363-4270-486265F4	N16P0160/000AAAAA000A0000	A15M0250/000AAAAA000A0000	RK 15301-01
121V5363-4270-486265F4	N16P0160/000AAAAB000F0000	A15M0250/000ABAAA000A0000	RK 15301-02
121V5363-495905C2	N16P0160/000AAAAB000F0000	A15M0250/000ABAAA000A0000	RK 15390
121V5363-495905C2	N16P0160/040AAAAE000A0000	A15M0265/000AAAAA000A0000	RK 15391
121V5363-495905F4	N16P0160/040AAAAE000A0000	A15M0265/000AAAAA000A0000	RK 16016
121V5363-495905F4	N16P0220/000AAAAE000A0000	A15M0280/000AAAAA000A0000	RK 19473
121V5397	N16P0220/000AAAAE000A0000	A15M0280/000AAAAA000A0000	RK 19476
121V5397	N16P0250/000AAAAB000F0000	A15M0280/035AAAAA000A0000	RK 19492
121V5397-495910N7	N16P0250/000AAAAB000F0000	A15M0280/035AAAAA000A0000	RK 19506
121V5397-495910N7	N16P0320/000AAAAA000A0000	A15M0300/000AAAAA000A0000	RK 20017
121V5406	N16P0320/000AAAAA000A0000	A15M0300/000AAAAA000A0000	RK 20126
121V5406	N16P0320/000AAAAE000A0000	A15M0300/000AAAAA000F0000	RK 20135
121V5406-2995-481865C2	N16P0320/000AAAAE000A0000	A15M0300/000AAAAA000F0000	RK 20163
121V5406-2995-481865C2	N16P0350/000AAAAE000A0000	A15M0320/000AAAAA000A0000	RK 20179
121V5406-495905C2	N16P0350/000AAAAE000A0000	A15M0320/000AAAAA000A0000	RK 20725
121V5406-495905C2	N16Q0010/000AAAAB000F0000	A15M0320/000AAAAA000X0000	RK 20726
121V5463	N16Q0010/000AAAAB000F0000	A15M0320/000AAAAA000X0000	RK 21030
121V5463	N16Q0025/000AAAAB000A0000	A15M0340/000AAAAA000F0000	RK 21067
121V5463-4270-481000A2	N16Q0025/000AAAAB000A0000	A15M0340/000AAAAA000F0000	RK 21069
121V5463-4270-481000A2	N16Q0025/000AAAAB000F0000	A15M0350/000AAAAA000A0000	RK 21113
121V5463-4270-486265A7	N16Q0025/000AAAAB000F0000	A15M0350/000AAAAA000A0000	RK 21113-13-11
121V5463-4270-486265A7	N16Q0025/000AAAAD000A0000	A15M0370/000AAAAA000A0000	RK 21501
121V5463-4270-486265C2	N16Q0025/000AAAAD000A0000	A15M0370/000AAAAA000A0000	RK 22098
121V5463-4270-486265C2	N16Q0025/000AAAAD000F0000	A15M0400/000AAAAA000A0000	RK 22137
121V5463-4270-486265F4	N16Q0025/000AAAAD000F0000	A15M0400/000AAAAA000A0000	RK 22168
121V5463-4270-486265F4	N16Q0025/000AAAAE000A0000	A15M0400/000AAAAA000F0000	RK 22210
121V5463-495905C2	N16Q0025/000AAAAE000A0000	A15M0400/000AAAAA000F0000	RK 22244
121V5463-495905C2	N16Q0025/000AAAAE000F0000	A15M0400/000AAAAA00YA0000	RK 22323
121V5497	N16Q0025/000AAAAE000F0000	A15M0400/000AAAAA00YA0000	RK 22329
121V5497	N16Q0040/000AAAAB000A0000	A15M0400/000AAAAA0S0A0000	RK 22333
121V5497-495900C2	N16Q0040/000AAAAB000A0000	A15M0400/000AAAAA0S0A0000	RK 22350-02
121V5497-495900C2	N16Q0050/000AAAAA000A0000	A15M0400/000ABAAA000F0000	RK 22354-01
121V5497-495910N7	N16Q0050/000AAAAA000A0000	A15M0400/000ABAAA000F0000	RK 22354-02
121V5497-495910N7	N16Q0050/000AAAAA000F0000	A15M0440/000AAAAA000F0000	RK 22368
121V5706-2995-481865C1	N16Q0050/000AAAAA000F0000	A15M0440/000AAAAA000F0000	RK 22423
121V5706-2995-481865C1	N16Q0050/000AAAAB000A0000	A15M0450/000AAAAA000A0000	RK 22425
121V5706-2995-481865C2	N16Q0050/000AAAAB000A0000	A15M0450/000AAAAA000A0000	RK 22454
121V5706-2995-481865C2	N16Q0050/000AAAAB000F0000	A15M0490/000AAAAA00YA0000	RK 22610
121V5706-2995-482725C2	N16Q0050/000AAAAB000F0000	A15M0490/000AAAAA00YA0000	RK 22616-01
121V5706-2995-482725C2	N16Q0050/000AAAAD000A0000	A15M0500/000AAAAA000A0000	RK 22616-02
121V5706-495905A2	N16Q0050/000AAAAD000A0000	A15M0500/000AAAAA000A0000	RK 22628
121V5706-495905A2	N16Q0050/000AAAAD000F0000	A15M0500/000AAAAA000F0000	RK 22739
121V5706-8520-486265C2	N16Q0050/000AAAAD000F0000	A15M0500/000AAAAA000F0000	RK 22798
121V5706-8520-486265C2	N16Q0050/000AAAAE000A0000	A15M0500/000AAAAA0S0A0000	RK 30051
121V5763	N16Q0050/000AAAAE000A0000	A15M0500/000AAAAA0S0A0000	RK 30058
121V5763	N16Q0050/000AAAAE000X0000	A15M0500/000ABAAA000A0000	RK 30063
121V5763-2995-4818653D	N16Q0050/000AAAAE000X0000	A15M0500/000ABAAA000A0000	RK 30076
121V5763-2995-4818653D	N16Q0060/000AAAAA000A0000	A15M0550/000AAAAA000A0000	RK 30475
121V5763-4270-486265C2	N16Q0060/000AAAAA000A0000	A15M0550/000AAAAA000A0000	RK 30476
121V5763-4270-486265C2	N16Q0075/000AAAAD000A0000	A15M0550/000AAAAA000F0000	RK 30480
121V5763-495905B8	N16Q0075/000AAAAD000A0000	A15M0550/000AAAAA000F0000	RK 30488
121V5763-495905B8	N16Q0075/000AAAAE000A0000	A15M0550/050ACAAA000A0000	RK 30770

12-2 RB-SS	N16Q0075/000AAAAE000A0000	A15M0550/050ACAAA000A0000	RK 30817
12-20 F5OX-S	N16Q0080/000AAAAA000A0000	A15M0550/050ACAAA000F0000	RK 30876
12209FIL	N16Q0080/000AAAAA000A0000	A15M0550/050ACAAA000F0000	RK 30900
12209FIL	N16Q0080/000AAAAD000F0000	A15M0560/000AAAAA000A0000	RK 30925
12-20F42EDMLOS	N16Q0080/000AAAAD000F0000	A15M0560/000AAAAA000A0000	RK 30964
12-20F42EDMXS	N16Q0100/000AAAAA000A0000	A15M0600/000AAAAA000A0000	RK 32204
12-20F42EDMXSS	N16Q0100/000AAAAA000A0000	A15M0600/000AAAAA000A0000	RK 58052
12-20F4OMXS	N16Q0100/000AAAAA0G0A0000	A15M0600/000AAAAA000F0000	RK0
12-20F5OMLOS	N16Q0100/000AAAAA0G0A0000	A15M0600/000AAAAA000F0000	RK0200E000
12-20MMLOHB3S	N16Q0100/000AAAAB000A0000	A15M0610/000AAAAA000A0000	RK0200H000
12-20S LOHU86-S	N16Q0100/000AAAAB000A0000	A15M0610/000AAAAA000A0000	RK0200K000
12210FIL	N16Q0100/000AAAAB000F0000	A15M0650/000AAAAA000A0000	RK0200Q000
12210FIL	N16Q0100/000AAAAB000F0000	A15M0650/000AAAAA000A0000	RK0300H000
12211FIL	N16Q0100/000AAAAE000A0000	A15M0650/000AAAAA000F0000	RK-036-80367-0
12211FIL	N16Q0100/000AAAAE000A0000	A15M0650/000AAAAA000F0000	RK-036-80371-0
122-125	N16Q0100/026AAAAE000F0000	A15M0655/000AAAAA000A0000	RK0400E000
122-126	N16Q0100/026AAAAE000F0000	A15M0655/000AAAAA000A0000	RK0400H000
122-126	N16Q0120/000AAAAB000F0000	A15M0680/000AAAAA000A0000	RK0400K000
1221FIL	N16Q0120/000AAAAB000F0000	A15M0680/000AAAAA000A0000	RK0400Q000
1221FIL	N16Q0125/000AAAAA000A0000	A15M0700/000AAAAA000A0000	RK05/10
1222FIL	N16Q0125/000AAAAA000A0000	A15M0700/000AAAAA000A0000	RK05/10E
1222FIL	N16Q0125/000AAAAB000A0000	A15M0700/000AAAAA000F0000	RK05/10N
12232FIL	N16Q0125/000AAAAB000A0000	A15M0700/000AAAAA000F0000	RK05/10R
12232FIL	N16Q0125/000AAAAD000A0000	A15M0700/000AAAAA00YA0000	RK05/13
12233FIL	N16Q0125/000AAAAD000A0000	A15M0700/000AAAAA00YA0000	RK0600H000
12233FIL	N16Q0160/000AAAAA000A0000	A15M0700/000EAAAA000A0000	RK0600K000
12234FIL	N16Q0160/000AAAAA000A0000	A15M0700/000EAAAA000A0000	RK0600Q000
12234FIL	N16Q0160/000AAAAB000A0000	A15M0730/000AAAAA000F0000	RK06MMB0451
12236FIL	N16Q0160/000AAAAB000A0000	A15M0730/000AAAAA000F0000	RK08MMB0561
12236FIL	N16Q0160/000AAAAD000A0000	A15M0750/000AAAAA000A0000	RK0PYD
12237FIL	N16Q0160/000AAAAD000A0000	A15M0750/000AAAAA000A0000	RK1
12237FIL	N16Q0160/000AAAAE000A0000	A15M0750/000AAAAA000F0000	RK10/13
12241FIL	N16Q0160/000AAAAE000A0000	A15M0750/000AAAAA000F0000	RK10/13E
12241FIL	N16Q0200/000AAAAE000A0000	A15M0750/000ABAAA000F0000	RK10/13N
12242FIL	N16Q0200/000AAAAE000A0000	A15M0750/000ABAAA000F0000	RK10/13R
12242FIL	N16Q0200/000AAAAE000F0000	A15M0755/000AAAAA000A0000	RK10/13S_07
12243FIL	N16Q0200/000AAAAE000F0000	A15M0755/000AAAAA000A0000	RK10/17
12243FIL	N16Q0250/000AAAAB000A0000	A15M0770/000AAAAA000A0000	RK10/17N
12244FIL	N16Q0250/000AAAAB000A0000	A15M0770/000AAAAA000A0000	RK10/21
12244FIL	N16Q0250/000AAAAD000A0000	A15M0770/000AAAAA000F0000	RK10/21N
12245FIL	N16Q0250/000AAAAD000A0000	A15M0770/000AAAAA000F0000	RK10553
12245FIL	N16Q0250/000AAAAE000A0000	A15M0800/000AAAAA000A0000	RK11007
12246FIL	N16Q0250/000AAAAE000A0000	A15M0800/000AAAAA000A0000	RK11-1676E
12246FIL	N16Q0280/000AAAAA000A0000	A15M0800/000AAAAA00YA0000	RK118B
12247FIL	N16Q0280/000AAAAA000A0000	A15M0800/000AAAAA00YA0000	RK118B
12247FIL	N16Q0400/000AAAAB000F0000	A15M0825/000AAAAA00YA0000	RK119A
12248FIL	N16Q0400/000AAAAB000F0000	A15M0825/000AAAAA00YA0000	RK119A
12248FIL	N16Q0500/000AAAAB000A0000	A15M0825/050AAAAA000A0000	RK119B
12249FIL	N16Q0500/000AAAAB000A0000	A15M0825/050AAAAA000A0000	RK119B
12249FIL	N16X1.5/3-50	A15M0840/000AAAAA000A0000	RK119D
1224FIL	N16X2/1-50	A15M0840/000AAAAA000A0000	RK119D
1224FIL	N16X2/3-50	A15M0840/000AAAAA000F0000	RK119G
12250FIL	N16X2/5-50	A15M0840/000AAAAA000F0000	RK119G

12250FIL	N17K0005/000ABAAB000A0000	A15M0850/000AAAAA000A0000	RK119X20B
12251FIL	N17K0005/000ABAAB000A0000	A15M0850/000AAAAA000A0000	RK119X20B
12251FIL	N17K0010/000AAAAA000A0000	A15M0900/000AAAAA000A0000	RK119X20D
1225FIL	N17K0010/000AAAAA000A0000	A15M0900/000AAAAA000A0000	RK119X20D
1225FIL	N17K0020/000AAAAB000F0000	A15M0900/000AAAAA000F0000	RK119Y
12263FIL	N17K0020/000AAAAB000F0000	A15M0900/000AAAAA000F0000	RK119Y
12263FIL	N17K0020/000AAAAD000A0000	A15M0900/000EAAAA000A0000	RK12MMB0701
12264FIL	N17K0020/000AAAAD000A0000	A15M0900/000EAAAA000A0000	RK12MMB0901
12264FIL	N17K0025/000AAAAA000A0000	A15M0950/000AAAAA000A0000	RK13/17
12265FIL	N17K0025/000AAAAA000A0000	A15M0950/000AAAAA000A0000	RK13/17E
12265FIL	N17K0025/000AAAAA000F0000	A15M0950/000EAAAA000A0000	RK13/17N
12266FIL	N17K0025/000AAAAA000F0000	A15M0950/000EAAAA000A0000	RK13/17R
12266FIL	N17K0025/000AAAAD000F0000	A15M0970/000AAAAA000A0000	RK13/17S_09
12266FIL	N17K0025/000AAAAD000F0000	A15M0970/000AAAAA000A0000	RK13/21
12266FIL	N17L0020/000AAAAA000F0000	A15M1000/000AAAAA000A0000	RK13/21N
12267FIL	N17L0020/000AAAAA000F0000	A15M1000/000AAAAA000A0000	RK-15036043
12267FIL	N17L0025/000AAAAA000A0000	A15M1000/000AAAAA000F0000	RK17/21
12268FIL	N17L0025/000AAAAA000A0000	A15M1000/000AAAAA000F0000	RK17/21E
12268FIL	N17L0025/000AAAAB000F0000	A15M1000/000EAAAA000A0000	RK17/21N
12269FIL	N17L0025/000AAAAB000F0000	A15M1000/000EAAAA000A0000	RK17/21R
12269FIL	N17L0025/000AAAAD000A0000	A15M1050/000AAAAA000A0000	RK17/21S_08
12270FIL	N17L0025/000AAAAD000A0000	A15M1050/000AAAAA000A0000	RK17/26
12270FIL	N17L0025/000AAAAE000A0000	A15M1050/000AAAAA000F0000	RK17/26N
12271FIL	N17L0025/000AAAAE000A0000	A15M1050/000AAAAA000F0000	RK1PYD
12271FIL	N17M0015/000AAAAB000A0000	A15M1050/050ACAAA000F0000	RK2
12274FIL	N17M0015/000AAAAB000A0000	A15M1050/050ACAAA000F0000	RK20025-01
12274FIL	N17M0015/000AAAAE000A0000	A15M1100/000AAAAA000F0000	RK20075-01
12275FIL	N17M0015/000AAAAE000A0000	A15M1100/000AAAAA000F0000	RK21/26
12275FIL	N17M0025/000AAAAD000A0000	A15M1150/000AAAAA000A0000	RK21/26N
12276FIL	N17M0025/000AAAAD000A0000	A15M1150/000AAAAA000A0000	RK21/26S_08
12276FIL	N17M0025/000AAAAD000F0000	A15M1150/000AAAAA000F0000	RK21/33
12277FIL	N17M0025/000AAAAD000F0000	A15M1150/000AAAAA000F0000	RK-25035442
12277FIL	N17M0025/000AAAAE000A0000	A15M1150/000AAAAA00YA0000	RK-25035724
12278FIL	N17M0025/000AAAAE000A0000	A15M1150/000AAAAA00YA0000	RK-25036089
12278FIL	N17M0025/050ABAAB000A0000	A15M1150/000EAAAA000A0000	RK-25036432
12279FIL	N17M0025/050ABAAB000A0000	A15M1150/000EAAAA000A0000	RK-25036452
12279FIL	N17N0010/000AAAAA000A0000	A15M1200/000AAAAA000A0000	RK-25037086
12280FIL	N17N0010/000AAAAA000A0000	A15M1200/000AAAAA000A0000	RK-25037087
12280FIL	N17N0010/000AAAAA000F0000	A15M1200/000ABAAA000A0000	RK-25037088
12-2829S	N17N0010/000AAAAA000F0000	A15M1200/000ABAAA000A0000	RK-25037089
1229.5	N18-C4-0000	A15M1200/000ABAAA000F0000	RK-25037213
122K83	N18-C4-0000	A15M1200/000ABAAA000F0000	RK-25037214
122K83	N18-C4-0000-07	A15M1350/000EAAAA000A0000	RK-25037258
122K8306	N18-C4-0000-07	A15M1350/000EAAAA000A0000	RK-25037288
122K8306	N18-C4-0A00	A15M1500/000AAAAA000A0000	RK-25037300
122K8306-2995-481865C2	N18-C4-0A00	A15M1500/000AAAAA000A0000	RK-25037301
122K8306-2995-481865C2	N18-C4-0D00	A15M1570/000EAAAA000A0000	RK-25037334
122K8306-4270-4810005P	N18-C4-0D00	A15M1570/000EAAAA000A0000	RK-25037377
122K8306-4270-4810005P	N18K0015/000AAAAA000A0000	A15M1600/000AAAAA000A0000	RK-25037491
122K8306-4538-486265C2	N18K0015/000AAAAA000A0000	A15M1600/000AAAAA000A0000	RK-25037492
122K8306-4538-486265C2	N18K0015/000AAAAD000A0000	A15M1650/000AAAAA000A0000	RK-25037493
122K8306-483371C2	N18K0015/000AAAAD000A0000	A15M1650/000AAAAA000A0000	RK-25037494
122K8306-483371C2	N18K0025/000AAAAB000A0000	A15M1650/000AAABA000A0000	RK-25037498

122K8306-N0-D100C2	N18K0025/000AAAAB000A0000	A15M1650/000AAABA000A0000	RK-25037500
122K8306-N0-D100C2	N18K0025/000AAAAE000F0000	A15M1650/000EAAAA000A0000	RK-25037501
122K8321-852023-483824T1	N18K0025/000AAAAE000F0000	A15M1650/000EAAAA000A0000	RK-25037636
122K8321-852023-483824T1	N18K0025/025AAAAB000F0000	A15M1670/000EAAAA000A0000	RK-25037812
122K8321-876024-483824B7	N18K0025/025AAAAB000F0000	A15M1670/000EAAAA000A0000	RK-25037813
122K8321-876024-483824B7	N18L0025/000AAAAA000A0000	A15M1700/000AAAAA000F0000	RK-25037814
122K8321-876024-483824P8	N18L0025/000AAAAA000A0000	A15M1700/000AAAAA000F0000	RK-25037816
122K8321-876024-483824P8	N18Q0025/000AAAAE000A0000	A15M1800/000AAAAA000A0000	RK-25037817
122K8321-876024-483824T1	N18Q0025/000AAAAE000A0000	A15M1800/000AAAAA000A0000	RK-25037818
122K8321-876024-483824T1	N1952300353	A15M1850/000ABAAA000F0000	RK-25037939
122K83-299503-491514P3	N1952300353	A15M1850/000ABAAA000F0000	RK-25038509
122K83-299503-491514P3	N2000S	A15M1900/000AAAAA000F0000	RK-25038510
122K83-2995-4818653D	N200B	A15M1900/000AAAAA000F0000	RK-25038511
122K83-2995-4818653D	N200S	A15M2000/000AAAAA000A0000	RK-25039193
122K83-2995-482725C5	N2020SF	A15M2000/000AAAAA000A0000	RK-25039224N
122K83-2995-482725C5	N22X2/1-50	A15M2750/000AAAAA000A0000	RK-25039225N
122K83-492190C2	N22X2/5-50	A15M2750/000AAAAA000A0000	RK-25039228N
122K83-492190C2	N26K0015/000AAAAA000A0000	A15N0020/000AAAAA000F0000	RK-25039327
122K8363	N26K0015/000AAAAA000A0000	A15N0020/000AAAAA000F0000	RK-25039329
122K8363	N26K0015/000AAAAB000A0000	A15N0025/000AAAAA000A0000	RK-25039330
122K8363-2995-492425F4	N26K0015/000AAAAB000A0000	A15N0025/000AAAAA000A0000	RK-25039331
122K8363-2995-492425F4	N26K0020/000AAAAA000A0000	A15N0030/000AAAAA000A0000	RK-25039566
122K8363-4270-481044A7	N26K0020/000AAAAA000A0000	A15N0030/000AAAAA000A0000	RK-25039572
122K8363-4270-481044A7	N26K0050/000AAAAA000A0000	A15N0040/000AAAAA000A0000	RK26/33
122K8363-4270-481044F4	N26K0050/000AAAAA000A0000	A15N0040/000AAAAA000A0000	RK26/33N
122K8363-4270-481044F4	N26K0110/000AAAAB000F0000	A15N0050/000AAAAA000A0000	RK2AHL051
122K8363-4270-481044S2	N26K0110/000AAAAB000F0000	A15N0050/000AAAAA000A0000	RK2AHL055
122K8363-4270-481044S2	N26M0040/000AAAAA000A0000	A15N0050/000ACAAA000A0000	RK2AHL061
122K8363-4270-486265A7	N26M0040/000AAAAA000A0000	A15N0050/000ACAAA000A0000	RK2AHL062
122K8363-4270-486265A7	N26M0040/000AAAAA000F0000	A15N0060/000AAAAA000A0000	RK2AHL065
122K8363-4270-486265B7	N26M0040/000AAAAA000F0000	A15N0060/000AAAAA000A0000	RK2AHL101
122K8363-4270-486265B7	N26M0050/000AAAAA000A0000	A15N0060/000AAAAA000F0000	RK2AHL102
122K8363-4270-486265C2	N26M0050/000AAAAA000A0000	A15N0060/000AAAAA000F0000	RK2AHL105
122K8363-4270-486265C2	N26M0090/000AAAAA0A0A0000	A15N0060/000ACAAA000A0000	RK2AHL106
122K8363-4270-486265F4	N26M0090/000AAAAA0A0A0000	A15N0060/000ACAAA000A0000	RK2AHL131
122K8363-4270-486265F4	N26N0030/000AAAAA000A0000	A15N0065/000AAAAA000A0000	RK2AHL132
122K84	N26N0030/000AAAAA000A0000	A15N0065/000AAAAA000A0000	RK2AHL135
122K84	N26N0050/000AAAAA000A0000	A15N0070/000AAAAA000A0000	RK2AHL171
122K8406	N26N0050/000AAAAA000A0000	A15N0070/000AAAAA000A0000	RK2AHL172
122K8406	N26N0060/000AAAAA000A0000	A15N0075/000AAAAA000A0000	RK2AHL175
122K8406-2995-481865C2	N26N0060/000AAAAA000A0000	A15N0075/000AAAAA000A0000	RK2AHL201
122K8406-2995-481865C2	N26N0100/000AAAAA000A0000	A15N0080/000AAAAA000A0000	RK2AHL202
122K8406-483371C2	N26N0100/000AAAAA000A0000	A15N0080/000AAAAA000A0000	RK2AHL205
122K8406-483371C2	N26N0100/000AAAAD000A0000	A15N0080/195AAAAA000F0000	RK2AHL251
122K8408	N26N0100/000AAAAD000A0000	A15N0080/195AAAAA000F0000	RK2AHL252
122K8408	N26N0150/000AAABA000A0000	A15N0100/000AAAAA000A0000	RK2AHL255
122K8408-2995-4818653D	N26N0150/000AAABA000A0000	A15N0100/000AAAAA000A0000	RK2AHL301
122K8408-2995-4818653D	N26N0150/000AAABA000F0000	A15N0100/000AAAAA000X0000	RK2AHL302
122K8408-2995-481865C2	N26N0150/000AAABA000F0000	A15N0100/000AAAAA000X0000	RK2AHL305
122K8408-2995-481865C2	N26N0150/000ABABA000F0000	A15N0125/000AAAAA000A0000	RK2AHL351
122K8408-4270-4810003D	N26N0150/000ABABA000F0000	A15N0125/000AAAAA000A0000	RK2AHL355
122K8408-4270-4810003D	N26P0010/000AAAAA000A0000	A15N0125/000AAAAB0G0A0000	RK2AHL401
122K8408-4270-486265A7	N26P0010/000AAAAA000A0000	A15N0125/000AAAAB0G0A0000	RK2AHL402

122K8408-4270-486265A7	N26P0020/000AAAAA000A0000	A15N0125/000AAABA000A0000	RK2AHL405
122K8408-4270-486265F4	N26P0020/000AAAAA000A0000	A15N0125/000AAABA000A0000	RK2AHL501
122K8408-4270-486265F4	N26P0050/000AAAAA000A0000	A15N0125/000ABAAA000A0000	RK2AHL505
122K8408-4833713D	N26P0050/000AAAAA000A0000	A15N0125/000ABAAA000A0000	RK2AHL551
122K8408-4833713D	N26P0060/000AAAAA000A0000	A15N0125/180AAAAA0S0A0088	RK2AHL552
122K8408-483371C2	N26P0060/000AAAAA000A0000	A15N0125/180AAAAA0S0A0088	RK2AHL555
122K8408-483371C2	N26P0150/000AAAAA000A0000	A15N0140/000AAAAA000A0000	RK2AN00061
122K8408-N0-C322C1	N26P0150/000AAAAA000A0000	A15N0140/000AAAAA000A0000	RK2AN00101
122K8408-N0-C322C1	N26Q0025/000AAAAA000F0000	A15N0150/000AAAAA000A0000	RK2AN00131
122K84-2995-4818653D	N26Q0025/000AAAAA000F0000	A15N0150/000AAAAA000A0000	RK2AN00171
122K84-2995-4818653D	N26Q0040/000AAAAE000A0000	A15N0150/000AAAAA00YF0000	RK2AN00201
122K84-2995-481865A2	N26Q0040/000AAAAE000A0000	A15N0150/000AAAAA00YF0000	RK2AN00301
122K84-2995-481865A2	N26Q0050/000AAAAA000A0000	A15N0150/000AAAAB0G0A0000	RK2AN00351
122K84-2995-481865C2	N26Q0050/000AAAAA000A0000	A15N0150/000AAAAB0G0A0000	RK2HLF0101
122K84-2995-481865C2	N26Q0050/000AAAAB000A0000	A15N0160/000AAAAA000A0000	RK2HLF0131
122K84-4270-481000C2	N26Q0050/000AAAAB000A0000	A15N0160/000AAAAA000A0000	RK2HLF0171
122K84-4270-481000C2	N26Q0050/000AAAAB000F0000	A15N0160/000AAAAA000X0000	RK2HLF0201
122K84-492190C2	N26Q0050/000AAAAB000F0000	A15N0160/000AAAAA000X0000	RK2HLF0251
122K84-492190C2	N26Q0080/000AAAAA000A0000	A15N0160/000AAAAA0T0A0000	RK2HLF0351
122K9321-852023-483824B7	N26Q0080/000AAAAA000A0000	A15N0160/000AAAAA0T0A0000	RK2HLF0401
122K9321-852023-483824B7	N26Q0150/000ABAAA000A0000	A15N0170/000AAAAA000A0000	RK2HLTS051
122K9321-852023-483824P8	N26Q0150/000ABAAA000A0000	A15N0170/000AAAAA000A0000	RK2HLTS061
122K9321-852023-483824P8	N28-C6-0000	A15N0180/000AAAAA000A0000	RK2HLTS101
122K9321-852023-483824T1	N28-C6-0000	A15N0180/000AAAAA000A0000	RK2HLTS131
122K9321-852023-483824T1	N28-C6-0000-55	A15N0180/000AAAAA000F0000	RK2HLTS171
122K9321-876024-483824B5	N28-C6-0000-55	A15N0180/000AAAAA000F0000	RK2HLTS201
122K9321-876024-483824B5	N28-C6-0E00-55	A15N0180/000AAAAABK0A0000	RK2HLTS251
122K9321-876024-483824B7	N28-C6-0E00-55	A15N0180/000AAAAABK0A0000	RK2HLTS301
122K9321-876024-483824B7	N31461089	A15N0200/000AAAAA000A0000	RK2HLTS351
122K9321-876024-483824P8	N31461089	A15N0200/000AAAAA000A0000	RK2HLTS401
122K9321-876024-483824P8	N35441091	A15N0200/000AAAAA000X0000	RK2HLTS501
122K9321-876024-483824T1	N35441091	A15N0200/000AAAAA000X0000	RK2HLTS551
122K9321-876024-483824T1	N35461091	A15N0200/000AAAAA0B0A0000	RK2HM0121
122K9363	N35461091	A15N0200/000AAAAA0B0A0000	RK2HM0141
122K9363	N3554104557	A15N0200/000AAAAA0S0A0088	RK2HM0145
122K9363-4270-481044A7	N3554104557	A15N0200/000AAAAA0S0A0088	RK2HM0181
122K9363-4270-481044A7	N3554304553	A15N0210/000AAAAA000A0000	RK2HM0182
122K9363-4270-486265C2	N3554304553	A15N0210/000AAAAA000A0000	RK2HM0185
122K9363-4270-486265C2	N3554600149	A15N0220/000AAAAA000A0000	RK2HM0221
122V8306	N3554600149	A15N0220/000AAAAA000A0000	RK2HM0222
122V8306	N3554600449	A15N0220/000AAAAA000F0000	RK2HM0225
12-3/4 AOEG-S	N3554600449	A15N0220/000AAAAA000F0000	RK2HM0281
12-3/4 AW2-SS	N36491091	A15N0225/000AAAAA000A0000	RK2HM0282
12-3/4 F5OG-S	N36491091	A15N0225/000AAAAA000A0000	RK2HM0285
12-3/4 ZHBW2-SS	N3658600249	A15N0225/000AAAAA00YA0000	RK2HM0361
12-3/4 ZHLW2-SS	N3658600249	A15N0225/000AAAAA00YA0000	RK2HM0362
12-3/4F5OHG4S	N3659504749	A15N0230/000AAAAA000F0000	RK2HM0365
12300FIL	N3659504749	A15N0230/000AAAAA000F0000	RK2HM0451
12300FIL	N365S500249	A15N0248/000AAAAA00YA0000	RK2HM0452
12301FIL	N365S500249	A15N0248/000AAAAA00YA0000	RK2HM0455
12301FIL	N37461091	A15N0250/000AAAAA000A0000	RK2HM0561
12301FIL	N37461091	A15N0250/000AAAAA000A0000	RK2HM0562
12301FIL	N38481091	A15N0250/000AAAAA0G0A0000	RK2HM0565

123022-01	N38481091	A15N0250/000AAAAA0G0A0000	RK2HM0701
12302FIL	N3857504749	A15N0250/000AAAAB0G0A0000	RK2HM0702
12302FIL	N3857504749	A15N0250/000AAAAB0G0A0000	RK2HM0705
12307-02349	N400B	A15N0280/000AAAAA000A0000	RK2HM0901
12307-02349	N400BV	A15N0280/000AAAAA000A0000	RK2HM0902
12308FIL	N400S	A15N0290/000AAAAA000F0000	RK2HM0905
12308FIL	N400S4F	A15N0290/000AAAAA000F0000	RK2HM1101
12309FIL	N400SF	A15N0300/000AAAAA000A0000	RK2HM1401
12309FIL	N4ME4	A15N0300/000AAAAA000A0000	RK2HMF0121
12311FIL	N4X0.65/1-50	A15N0300/000AAAAA000F0000	RK2HMF0141
12311FIL	N4X1/1-50	A15N0300/000AAAAA000F0000	RK2HMF0181
123-125	N4X1/3-50	A15N0320/000AAAAA000A0000	RK2HMF0221
123-126	N4X1/5-50	A15N0320/000AAAAA000A0000	RK2HMF0225
12312FIL	N56K0015/000AAAAA000A0000	A15N0320/000AAAAA00YA0000	RK2HMF0281
12312FIL	N56K0015/000AAAAA000A0000	A15N0320/000AAAAA00YA0000	RK2HMF0361
12313FIL	N56K0015/000AAAAA000F0000	A15N0320/000AAAAA0S0A0315	RK2HMF0365
12313FIL	N56K0015/000AAAAA000F0000	A15N0320/000AAAAA0S0A0315	RK2HMF0451
1231FIL	N56K0025/000AAAAA000A0000	A15N0320/000AAAAC000A0000	RK2HMF0455
1231FIL	N56K0025/000AAAAA000A0000	A15N0320/000AAAAC000A0000	RK2HMF0561
1232FIL	N56K0025/000AAAAA000F0000	A15N0330/000AAAAA000A0000	RK2HMF0565
1232FIL	N56K0025/000AAAAA000F0000	A15N0330/000AAAAA000A0000	RK2HMF1101
1234FIL	N56K0040/000AAAAA000A0000	A15N0350/000AAAAA000A0000	RK2HTSU061
1234FIL	N56K0040/000AAAAA000A0000	A15N0350/000AAAAA000A0000	RK2HTSU101
12354FIL	N56K0040/000AAAAA000F0000	A15N0350/000AAAAA000F0000	RK2HTSU171
12354FIL	N56K0040/000AAAAA000F0000	A15N0350/000AAAAA000F0000	RK2HTSU201
12355FIL	N56K0050/000AAAAA000A0000	A15N0350/000AAAAA0K0A0000	RK3
12355FIL	N56K0050/000AAAAA000A0000	A15N0350/000AAAAA0K0A0000	RK30880E
12356FIL	N56K0080/000AAAAA000A0000	A15N0360/000AAAAA000F0000	RK30SX
12356FIL	N56K0080/000AAAAA000A0000	A15N0360/000AAAAA000F0000	RK-35035564
12357FIL	N56K0080/000AAAAA000F0000	A15N0400/000AAAAA000A0000	RK-35035702
12357FIL	N56K0080/000AAAAA000F0000	A15N0400/000AAAAA000A0000	RK-35036364
1235FIL	N56K0090/000AAAAA000A0000	A15N0400/000AAAAA000F0000	RK-35036402
1235FIL	N56K0090/000AAAAA000A0000	A15N0400/000AAAAA000F0000	RK-35036403
12363FIL	N56K0100/000AAAAA000A0000	A15N0400/000AAAAA000G0000	RK-35036416
12363FIL	N56K0100/000AAAAA000A0000	A15N0400/000AAAAA000G0000	RK-35036417
12364FIL	N56K0100/000AAAAA000F0000	A15N0400/000AAAAA0G0A0000	RK-35036435
12364FIL	N56K0100/000AAAAA000F0000	A15N0400/000AAAAA0G0A0000	RK-35036634
12375FIL	N56K0135/000AAAAA000F0000	A15N0420/000AAAAA000A0000	RK-35037081
12375FIL	N56K0135/000AAAAA000F0000	A15N0420/000AAAAA000A0000	RK-35037443
12377FIL	N56K0500/000AAAAA000A0000	A15N0450/000AAAAA000A0000	RK-35037444
12377FIL	N56K0500/000AAAAA000A0000	A15N0450/000AAAAA000A0000	RK-35037445
12381FIL	N56L0015/000AAAAA000A0000	A15N0450/000AAAAA000F0000	RK-35037446
12381FIL	N56L0015/000AAAAA000A0000	A15N0450/000AAAAA000F0000	RK-35037447
12384FIL	N56L0025/000AAAAA000A0000	A15N0450/000AAAAA0S0F0000	RK-35037449
12384FIL	N56L0025/000AAAAA000A0000	A15N0450/000AAAAA0S0F0000	RK-35037940
12389FIL	N56L0025/000AAAAA000F0000	A15N0450/000AAABA000A0000	RK-35038071
12389FIL	N56L0025/000AAAAA000F0000	A15N0450/000AAABA000A0000	RK-35038072
12391FIL	N56L0027/000AAAAA000A0000	A15N0480/000AAAAA000A0000	RK-35038073
12391FIL	N56L0027/000AAAAA000A0000	A15N0480/000AAAAA000A0000	RK-35038074
12392FIL	N56L0030/000AAAAA000A0000	A15N0485/000AAAAA000A0000	RK-35038078
12392FIL	N56L0030/000AAAAA000A0000	A15N0485/000AAAAA000A0000	RK-35038107
12399FIL	N56L0040/000AAAAA000A0000	A15N0500/000AAAAA000A0000	RK-35038166
12399FIL	N56L0040/000AAAAA000A0000	A15N0500/000AAAAA000A0000	RK-35038167

12-4 FHC-SS	N56L0050/000AAAAA000A0000	A15N0500/000AAAAA000F0000	RK-35038168
12-4 MHN-B	N56L0050/000AAAAA000A0000	A15N0500/000AAAAA000F0000	RK-35038292
12-4 MHN-SS	N56L0050/000AAAAA000F0000	A15N0500/000AAAAA000X0000	RK-35038871
12-4 RA-SS	N56L0050/000AAAAA000F0000	A15N0500/000AAAAA000X0000	RK-35038872
12-4 RB-6MO	N56M0010/000AAAAA000A0000	A15N0500/000AAAAA00YA0000	RK-35038873
12-4 RB-825	N56M0010/000AAAAA000A0000	A15N0500/000AAAAA00YA0000	RK-35039526N
12-4 RB-B	N56M0020/000AAAAA000A0000	A15N0500/000AAAAB000A0000	RK-36030338
12-4 RB-M	N56M0020/000AAAAA000A0000	A15N0500/000AAAAB000A0000	RK3PYD
12-4 RB-S	N56M0025/000AAAAA000A0000	A15N0500/000AAAAB0A0A0000	RK-45032508
12-4 RB-SS	N56M0025/000AAAAA000A0000	A15N0500/000AAAAB0A0A0000	RK-45033246
12-4 RB-SSHP	N56M0025/000AAAAA000F0000	A15N0550/000AAAAA000A0000	RK-45034671
12-4 SE-SS	N56M0025/000AAAAA000F0000	A15N0550/000AAAAA000A0000	RK-45035703
12-4 TRBZ-SS	N56M0025/000ABAAA000A0000	A15N0550/000AAAAAB00A0000	RK-45036370
12-4 TRLO-S	N56M0025/000ABAAA000A0000	A15N0550/000AAAAAB00A0000	RK-45036375
12-4 TRTX-B	N56M0025/000ABAAA000F0000	A15N0550/000AAABAB00A0000	RK-45036379
12-4 TRTX-S	N56M0025/000ABAAA000F0000	A15N0550/000AAABAB00A0000	RK-45036380
12400FIL	N56M0040/000AAAAA000A0000	A15N0580/000AAAAA000A0000	RK-45036391
12400FIL	N56M0040/000AAAAA000A0000	A15N0580/000AAAAA000A0000	RK-45036392
12401-00600	N56M0040/000AAAAA000F0000	A15N0600/000AAAAA000A0000	RK-45036393
12401-00600	N56M0040/000AAAAA000F0000	A15N0600/000AAAAA000A0000	RK-45036395
12401-02620	N56M0050/000AAAAA000A0000	A15N0600/000AAAAA000F0000	RK-45036436
12401-02620	N56M0050/000AAAAA000A0000	A15N0600/000AAAAA000F0000	RK-45036438
12407FIL	N56M0050/000ABAAA000F0000	A15N0600/000AAAAA000X0000	RK-46212417
12407FIL	N56M0050/000ABAAA000F0000	A15N0600/000AAAAA000X0000	RK-46212433
12408FIL	N56M0060/000ABAAA000A0000	A15N0650/000AAAAA000A0000	RK-46212463
12408FIL	N56M0060/000ABAAA000A0000	A15N0650/000AAAAA000A0000	RK-46212529
12409FIL	N56M0080/000AAAAA000A0000	A15N0650/000AAAAA000F0000	RK-46212676
12409FIL	N56M0080/000AAAAA000A0000	A15N0650/000AAAAA000F0000	RK-46212808
12412FIL	N56M0080/000AAAAA000F0000	A15N0660/000AAAAA000A0000	RK-46212956-U
12412FIL	N56M0080/000AAAAA000F0000	A15N0660/000AAAAA000A0000	RK-46213255
12-4-12JMTXS	N56M0120/000AAAAA000F0000	A15N0700/000AAAAA000A0000	RK-46213337
12415FIL	N56M0120/000AAAAA000F0000	A15N0700/000AAAAA000A0000	RK-46214085
12415FIL	N56M0200/000AAAAA000A0000	A15N0700/000AAABA000A0000	RK-46214086
1241FIL	N56M0200/000AAAAA000A0000	A15N0700/000AAABA000A0000	RK-46214087
1241FIL	N56M0200/000AAAAA000F0000	A15N0720/000AABAA000A0000	RK-46214089
12420-01200	N56M0200/000AAAAA000F0000	A15N0720/000AABAA000A0000	RK-46214130
12420-01200	N56N0008/000AAAAA000A0000	A15N0750/000AAAAA000A0000	RK-46214214
12420-02282	N56N0008/000AAAAA000A0000	A15N0750/000AAAAA000A0000	RK-46214225
12420-02282	N56N0025/000AAAAA000A0000	A15N0750/135AAAAA000A0000	RK-46214226
12420-02392	N56N0025/000AAAAA000A0000	A15N0750/135AAAAA000A0000	RK-46214227
12420-02392	N56N0025/000AAAAA000F0000	A15N0800/000AAAAA000A0000	RK-46214228
12420-02409	N56N0025/000AAAAA000F0000	A15N0800/000AAAAA000A0000	RK-46214229
12420-02409	N56N0030/000AAAAA000A0000	A15N0820/000AAAAA000A0000	RK-46214230
12420-02471	N56N0030/000AAAAA000A0000	A15N0820/000AAAAA000A0000	RK-46214231
12420-02471	N56N0050/000AAAAA000A0000	A15N0830/000AAAAA000A0000	RK-46214232
12420-02720	N56N0050/000AAAAA000A0000	A15N0830/000AAAAA000A0000	RK-46214359
12420-02720	N56N0100/000AAAAA000A0000	A15N0880/000AAAAA000A0000	RK-46214419
12420-03000	N56N0100/000AAAAA000A0000	A15N0880/000AAAAA000A0000	RK-46214527
12420-03000	N56P0010/000AAAAA000A0000	A15N0897/000AAAAA000A0000	RK-46214549
12422FIL	N56P0010/000AAAAA000A0000	A15N0897/000AAAAA000A0000	RK-46214551
12422FIL	N56P0025/000AAAAA000A0000	A15N0900/000AAAAA000A0000	RK-46214553
12423FIL	N56P0025/000AAAAA000A0000	A15N0900/000AAAAA000A0000	RK-46214569
12423FIL	N56P0025/000AAAAA000F0000	A15N1000/000AAAAA000A0000	RK-46214590

12424FIL	N56P0025/000AAAAA000F0000	A15N1000/000AAAAA000A0000	RK-46214629
12424FIL	N56P0030/000AAAAA000A0000	A15N1000/000AAAAA000F0000	RK-46214756
12425FIL	N56P0030/000AAAAA000A0000	A15N1000/000AAAAA000F0000	RK-46214888
12425FIL	N56P0040/000AAAAA000A0000	A15N1030/000AAAAA000A0000	RK-46214898
12429FIL	N56P0040/000AAAAA000A0000	A15N1030/000AAAAA000A0000	RK-46214937
12429FIL	N56P0050/000AAAAA000A0000	A15N1100/000AAAAA000A0000	RK-46215045
12431FIL	N56P0050/000AAAAA000A0000	A15N1100/000AAAAA000A0000	RK-46215214
12431FIL	N56P0250/000AAAAA000A0000	A15N1100/000FAAAA000A0000	RK-46215504
12432FIL	N56P0250/000AAAAA000A0000	A15N1100/000FAAAA000A0000	RK-46215555
12432FIL	N56Q0005/000AAAAA000A0000	A15N1150/000AAAAA000A0000	RK-46216035
12434FIL	N56Q0005/000AAAAA000A0000	A15N1150/000AAAAA000A0000	RK-46216246
12434FIL	N56Q0050/000AAAAA000A0000	A15N1150/000FAAAA000A0000	RK-46216479
124364-17-K100	N56Q0050/000AAAAA000A0000	A15N1150/000FAAAA000A0000	RK-46216858
12438FIL	N56Q0080/000AAAAA000A0000	A15N1170/000FAAAA000A0000	RK-46216875
12438FIL	N56Q0080/000AAAAA000A0000	A15N1170/000FAAAA000A0000	RK-4D02V-ZUBEHOER4
12439FIL	N56Q0080/000AAAAA000F0000	A15N1200/000AAAAA000A0000	RK58130
12439FIL	N56Q0080/000AAAAA000F0000	A15N1200/000AAAAA000A0000	RK602B
12440FIL	N56Q0100/000AAAAA000A0000	A15N1200/000AAAAA000F0000	RK602B
12440FIL	N56Q0100/000AAAAA000A0000	A15N1200/000AAAAA000F0000	RK606SY
12447FIL	N56Q0160/000AAAAA000A0000	A15N1200/056AAAAA000A0000	RK606SY
12447FIL	N56Q0160/000AAAAA000A0000	A15N1200/056AAAAA000A0000	RK606Y
1244FIL	N56Q0160/000AAAAA000F0000	A15N1200/150AAAAA000A0000	RK606Y
1244FIL	N56Q0160/000AAAAA000F0000	A15N1200/150AAAAA000A0000	RK60VM607
12454-02550	N56Q0200/000AAAAA000F0000	A15N1300/000AAAAA000A0000	RK902HTS501
12454-02550	N56Q0200/000AAAAA000F0000	A15N1300/000AAAAA000A0000	RK922HTS551
12454-06435	N56Q0250/000AAAAA000A0000	A15N1343/000AAAAA000A0000	RK-AS-AR1A/B
12454-06435	N56Q0250/000AAAAA000A0000	A15N1343/000AAAAA000A0000	RK-ASEW001D10
12457FIL	N5A125-6.9N	A15N1350/000AAAAA000A0000	RKB605WB
12457FIL	N5A300-10.0N	A15N1350/000AAAAA000A0000	RKB605WB
12458FIL	N5A300-6.9N	A15N1365/000AAAAA000A0000	RK-C18E32
12458FIL	N5B300-10.0N	A15N1365/000AAAAA000A0000	RK-CE016-01
12459FIL	N5B300-3.0N	A15N1400/000AAAAA000A0000	RK-CE016-04
12459FIL	N5B300-6.9N	A15N1400/000AAAAA000A0000	RK-CE016-08
1245FIL	N600B	A15N1500/000AAAAA000A0000	RK-CE025-01
1245FIL	N600S	A15N1500/000AAAAA000A0000	RK-CE025-08
12460FIL	N620S	A15N1650/000AAAAA00YF0000	RK-CE032-01
12460FIL	N620S4	A15N1650/000AAAAA00YF0000	RK-CE032-04
12461FIL	N66K0100/000AAAAA000A0000	A15N1700/000AAAAA000F0000	RK-CE032-07
12461FIL	N66K0100/000AAAAA000A0000	A15N1700/000AAAAA000F0000	RK-CE040-01
12464FIL	N6MEB8	A15N1700/000AAAAAB00A0000	RK-CE040-04
12464FIL	N6TUB6	A15N1700/000AAAAAB00A0000	RK-CE040-07
12464FIL	N6TUB8	A15N1800/000AAAAA000A0000	RK-CE040-08
12464FIL	N6X1.5/5-50	A15N1800/000AAAAA000A0000	RK-CE040F04S00N
12465-01900	N6X1/1-50	A15N2000/000AAAAA000F0000	RK-CE050-01
12465-01900	N6X1/3-50	A15N2000/000AAAAA000F0000	RK-CE050-04
12465-03624	N6X1/5-50	A15N2130/000AAAAA000A0000	RK-CE050-08
12465-03624	N800B	A15N2130/000AAAAA000A0000	RK-CE063-01
1246FIL	N800BV	A15P0025/000AAAAA000A0000	RK-CE063-04
1246FIL	N800S	A15P0025/000AAAAA000A0000	RK-D1VW75RETAINERDC
12473FIL	N800SF	A15P0040/000AAAAA000F0000	RK-D1VW81-PLUGIN-BOX
12473FIL	N8MCB4	A15P0040/000AAAAA000F0000	RK-D1VW91RETAINERAC-W
12490FIL	N8X1.25/1-50	A15P0050/000AAAAA000A0000	RK-D1VW91RETAINERDC
12490FIL	N8X1.25/5-50	A15P0050/000AAAAA000A0000	RK-D1VW91RETAINERDC-W

124998-01	N8X1.5/5-50	A15P0050/000ABABA000A0000	RK-D1VWPHSPAINKIT1
124998-02	N8X1/1-50	A15P0050/000ABABA000A0000	RK-D1VWPHSPAINKIT2
124999-01	N8X1/3-50	A15P0070/000AAAAA000F0000	RK-D3W30-ENDCAP
12-4G4MK4S	N8X1/5-50	A15P0070/000AAAAA000F0000	RK-D3W30RETAINERDC
12-4HMK4S	NB-4-035	A15P0080/000AAAAA000A0000	RK-D81VW-CHECKVALVE
12-4HMK4SS	NBR-4-050	A15P0080/000AAAAA000A0000	RK-D9P-XG257
12-4K6OO4MXS	NC100-A1*	A15P0080/000AAAAA000F0000	RKDHLTS101
12-4K6PP4MXS	NC100-B1*	A15P0080/000AAAAA000F0000	RKDHLTS131
12-4R6O4MXS	NC100-B1*-SY	A15P0080/000AAAAA000X0000	RKDHLTS171
12-4R6O4MXSS	NC100-C1*	A15P0080/000AAAAA000X0000	RKDHLTS201
12-4R6P4MLOS	NC100-D1*	A15P0080/000AAAAA0E0A0000	RKDHLTS251
12-4R6P4MXS	NC100-D1*-SY	A15P0080/000AAAAA0E0A0000	RKDHLTS301
12-4TRMTXSS	NC-PROFIBUS	A15P0080/000CAAAA0S0A0100	RKDHLTS351
125000-02	NE34-020/MM34-000	A15P0080/000CAAAA0S0A0100	RK-DSAE-K
125000-05	NEB10-030/3-A1	A15P0080/025AAAAA000A0000	RK-DUR12LK
125000-06	NEB15-055/3-B2	A15P0080/025AAAAA000A0000	RK-E155X150
125000-07	NEB15-055/3-B2-H	A15P0080/160ABABA000A0000	RK-E322X150
125001-01	NEB17/30-(300)-6-A1	A15P0080/160ABABA000A0000	RKF206MMA0455
125001-04	NEB17/30-070-3-A1	A15P0081/000AAAAA000A0000	RKF210MMA0701
125001-05	NEB17/30-070-6-A1	A15P0081/000AAAAA000A0000	RKF212MMA0901
125002-03	NEB17/30-070-6-A1-XXF	A15P0090/000AAAAA000A0000	RKGDHL172
125003-01	NEB17/30-070-7-A1-S	A15P0090/000AAAAA000A0000	RKGDHL405
125003-03	NEB40-(100)-6-A1	A15P0090/160AAABA000A0000	RKGDHM0141
125008-03	NEB40-(1650)-6-S1	A15P0090/160AAABA000A0000	RKGDHM0221
125008-05	NEB40-(300)-6-A1	A15P0090/160ABABA000A0000	RKGDHM0281
125-068100	NEB40-(300)-6-A1-BS	A15P0090/160ABABA000A0000	RKGDHM0361
125-068110	NEB40-(5000)-6-S2	A15P0100/000AAAAA000A0000	RKGDHM0451
125-068120	NEB40-(560)-6-A2	A15P0100/000AAAAA000A0000	RKGDHM0701
125-068150	NFI01/01	A15P0100/000AAAAA00YA0000	RKGDHM0901
125-068160	NFI01/02	A15P0100/000AAAAA00YA0000	RKGDHM1101
125-068179	NFI01/03	A15P0100/000AAABA000A0000	RKGDHM1401
125-068184	NFI02/01	A15P0100/000AAABA000A0000	RK-HR01036957
125-068260	NFI02/02	A15P0100/000ABAAA000A0000	RK-HR10055593
125-068272	NFI03/01	A15P0100/000ABAAA000A0000	RK-HR10062445
125-068325	NFI03/02	A15P0125/000AAAAA000A0000	RKJDHM0451
125-068350	NFI03/03	A15P0125/000AAAAA000A0000	RK-KOLBEN-11-D81VW
125-068550	NGCV6EF-6EF	A15P0125/000AAAAA000X0000	RK-KOLBEN-1-D41VW
125-069700	NGVBCN2-P50	A15P0125/000AAAAA000X0000	RK-KOLBEN-2-D41VW
125-069701	NGVBCN2-P50NR	A15P0125/000AAAAA0K0A0000	RK-KOLBEN-4-D41VW
125-069706	NGVC2-P30	A15P0125/000AAAAA0K0A0000	RK-KOLBEN-9-D41VW
125-069735	NGVC2-P36	A15P0125/000AAAAA0S0A0100	RKL100
125-069736	NGVN2-P30	A15P0125/000AAAAA0S0A0100	RKL100
125-069740	NGVN2-P36	A15P0125/000AAAAABG0A0000	RKM00030
125-069742	NGVNC	A15P0125/000AAAAABG0A0000	RKP1924
125-069748	NGVND	A15P0125/000CAAAA0S0A0100	RK-PV016HEN42
125-070100	NJ8-C6-A000	A15P0125/000CAAAA0S0A0100	RK-PV020HEN42
125-071100	NJ8-C6-A000	A15P0140/000ABAAA000A0000	RK-PV023HEN42
125-071300	NJ8-C6-C000	A15P0140/000ABAAA000A0000	RK-PV028HEN45
125-071400	NJ8-C6-C000	A15P0150/000AAAAA000A0000	RK-PV032HEN41
125-071417	NK310EAPR1002	A15P0150/000AAAAA000A0000	RK-PV032SKN40
125-071502	NK820EARR1003	A15P0160/000AAAAA000A0000	RK-PV040HEN41
125-071508	NM22-0201	A15P0160/000AAAAA000A0000	RK-PV046HEN41
125-071519	NM22-0201	A15P0160/000AAABA000A0000	RK-PV046SKN40

125-071538	NM45	A15P0160/000AAABA000A0000	RK-PV063HEN41
125-071558	NM45	A15P0160/025ABAAA000A0000	RK-PV080HEN41
125-071559	NN-2-031	A15P0160/025ABAAA000A0000	RK-PV092HEN41
125-071565	NN-4-040	A15P0160/115ABAAA000A0000	RK-PV092HEV41
125-071600	NN-4-062	A15P0160/115ABAAA000A0000	RK-PV140HEN41
125-071601	NN-6-050	A15P0160/125ABABA000A0000	RK-PV140SKN40
125-071605	NNR-2-026	A15P0160/125ABABA000A0000	RK-PV180HEN41
125-071606	NNR-4-035	A15P0160/150AAABA000X0000	RK-PV270HEN41
125-071607	NNR-8-062	A15P0160/150AAABA000X0000	RK-PV360WZM46
125-071608	NPA1	A15P0160/150ABABA000A0000	RK-PVBG1GLE42
125-071617	NPA2	A15P0160/150ABABA000A0000	RK-PVBG1KHB42
125-071624	NPA3	A15P0160/200AAAAA000A0000	RK-PVBG1KHC42
125-071626	NPA4	A15P0160/200AAAAA000A0000	RK-PVBG1KHD42
125-071628	NPA5	A15P0170/000AAAAA0S0A0000	RK-PVBG1KHE42
125-071668	NP-M33-M3HB	A15P0170/000AAAAA0S0A0000	RK-PVBG1KHG42
125-071703	NP-M33-M4HB	A15P0170/000CAAAA0S0A0000	RK-PVBG1-KOMPONENTEN-RAIL
125-071705	NP-M33-M5HB	A15P0170/000CAAAA0S0A0000	RK-PVBG1KOS42
125-071706	NP-M34-M3HB	A15P0180/000AAAAA000A0000	RK-PVBG1LS42
125-071707	NP-M34-M4HB	A15P0180/000AAAAA000A0000	RK-PVBG1-NH-MIC
125-071709	NP-M34-M5HB	A15P0180/000AAAAA000F0000	RK-PVBG1RFS42
125-071713	NR0750X300P	A15P0180/000AAAAA000F0000	RK-PVBG1-RG-MIC
125-071717	NR0750X300V	A15P0180/240AAAAA000A0000	RK-PVBG1ROG42
125-071718	NR-100	A15P0180/240AAAAA000A0000	RK-PVBG1SBN42
125-071742	NR1000X400P	A15P0200/000AAAAA000A0000	RK-PVBG1SBN45
125-071743	NR1000X400V	A15P0200/000AAAAA000A0000	RK-PVBG1SBV42
125-071754	NR23-S010/MM23-000	A15P0200/000AAAAA000X0000	RK-PVBG1SKS42
125-071811	NR-37	A15P0200/000AAAAA000X0000	RK-PVBG1SRS42
125-071815	NR-50	A15P0200/000AAAAA00YA0000	RK-PVBG1SRS45
125-071825	NR5X1/5-1000	A15P0200/000AAAAA00YA0000	RK-PVBG1SSL42
125-071833	NR-75	A15P0200/000AAAAA0S0A0000	RK-PVBG1SSR42
125-115033	NRTF1100-00	A15P0200/000AAAAA0S0A0000	RK-PVBG1-SU-MIC
12514-01000	NS-1001-16FB	A15P0200/000AAAAA0S0A0100	RK-PVBG1-SW-MIC
12514-01000	NS-1002-16FB	A15P0200/000AAAAA0S0A0100	RK-PVBG1-TB-MIC
12514-01800	NS1200S	A15P0200/000ACAAA000A0000	RK-PVBG1WPM42
12514-01800	NS1200SF	A15P0200/000ACAAA000A0000	RK-PVBG1WZM42
12517FIL	NS1600S	A15P0210/000AAAAA000A0000	RK-PVBG2APLR146
12517FIL	NS1600SF	A15P0210/000AAAAA000A0000	RK-PVBG2GLE40
12518FIL	NS-371-6FB	A15P0210/000ACAAA000A0000	RK-PVBG2GLE45
12518FIL	NS-372-6FB	A15P0210/000ACAAA000A0000	RK-PVBG2KHD40
12519FIL	NS400S	A15P0250/000AAAAA000A0000	RK-PVBG2KHE40
12519FIL	NS400S4	A15P0250/000AAAAA000A0000	RK-PVBG2KHE45
1251FIL	NS400S4FV	A15P0250/000AAAAA0G0A0000	RK-PVBG2KHG40
1251FIL	NS400SF	A15P0250/000AAAAA0G0A0000	RK-PVBG2KHG45
125-2010AR	NS400SV	A15P0250/000ACAAA000A0000	RK-PVBG2KHH40
125-2010AR	NS-501-8FB	A15P0250/000ACAAA000A0000	RK-PVBG2KHH45
12520FIL	NS-502-8FB	A15P0280/000AAAAA000A0000	RK-PVBG2KHK40
12520FIL	NS600S4	A15P0280/000AAAAA000A0000	RK-PVBG2KHM40
12521FIL	NS600S4FV	A15P0300/000AAAAA000A0000	RK-PVBG2KHM45
12521FIL	NS600SF	A15P0300/000AAAAA000A0000	RK-PVBG2KHO40
12523FIL	NS600SV	A15P0300/000AAAAA000F0000	RK-PVBG2KOS40
12523FIL	NS-751-12FB	A15P0300/000AAAAA000F0000	RK-PVBG2LS40
12531FIL	NS-752-12FB	A15P0300/000AAAAABG0A0000	RK-PVBG2LS46
12531FIL	NS800SF	A15P0300/000AAAAABG0A0000	RK-PVBG2RFS40

1254FIL	NUM10-316	A15P0300/000ABAAA000A0000	RK-PVBG2RFS45
1254FIL	NUM10-625	A15P0300/000ABAAA000A0000	RK-PVBG2SBN42
1255FIL	NUM10-6MO	A15P0320/000AAAAA000A0000	RK-PVBG2SBN45
1255FIL	NUM10-B	A15P0320/000AAAAA000A0000	RK-PVBG2SBV42
12561FIL	NUM10-HC	A15P0320/000AAAAAAG0X0000	RK-PVBG2SBV45
12561FIL	NUM10-M	A15P0320/000AAAAAAG0X0000	RK-PVBG2SKS42
12561FIL	NUM10-TI	A15P0320/046AAAAA000A0000	RK-PVBG2SRS41
12561FIL	NUM12-316	A15P0320/046AAAAA000A0000	RK-PVBG2SRS45
1257FIL	NUM12-6MO	A15P0350/000AAAAA000A0000	RK-PVBG2SSL40
1257FIL	NUM12-B	A15P0350/000AAAAA000A0000	RK-PVBG2SSR40
12582FIL	NUM12-HC	A15P0350/000AAAAA000X0000	RK-PVBG2SSR46
12582FIL	NUM12-M	A15P0350/000AAAAA000X0000	RK-PVBG2VTM40
12584FIL	NUM12-TI	A15P0358/165AAAAA000A0000	RK-PVBG2WPM40
12584FIL	NUM14-316	A15P0358/165AAAAA000A0000	RK-PVBG2WPM46
125K01	NUM15-316	A15P0358/165AAAAA000F0000	RK-PVBG2WPS40
125K01	NUM16-316	A15P0358/165AAAAA000F0000	RK-PVBG2WZM40
125K01-4269-4849903P	NUM16-6MO	A15P0400/000AAAAA000A0000	RK-PVBG2WZM46
125K01-4269-4849903P	NUM16-TI	A15P0400/000AAAAA000A0000	RK-PVBG3APLL143
125K01-4269-485400C2	NUM18-316	A15P0400/000AAAAA000F0000	RK-PVBG3APLR143
125K01-4269-485400C2	NUM18-6MO	A15P0400/000AAAAA000F0000	RK-PVBG3APLR145
125K01-4538-4849903P	NUM20-316	A15P0400/000AAAAA000X0000	RK-PVBG3GEHM145
125K01-4538-4849903P	NUM20-6MO	A15P0400/000AAAAA000X0000	RK-PVBG3GLE41
125K01-4538-485400C2	NUM20-TI	A15P0410/000AAAAA000A0000	RK-PVBG3HENX5861
125K01-4538-485400C2	NUM22-316	A15P0410/000AAAAA000A0000	RK-PVBG3KHG41
125K03	NUM2-316	A15P0430/000AAAAA000A0000	RK-PVBG3KHH41
125K03	NUM25-316	A15P0430/000AAAAA000A0000	RK-PVBG3KHK41
125K03-4269-4849903P	NUM25-6MO	A15P0440/000AAAAA000A0000	RK-PVBG3KHM41
125K03-4269-4849903P	NUM25-M	A15P0440/000AAAAA000A0000	RK-PVBG3KHS41
125K03-4269-484990P0	NUM25-TI	A15P0450/000AAAAA000A0000	RK-PVBG3KHT41
125K03-4269-484990P0	NUM3-316	A15P0450/000AAAAA000A0000	RK-PVBG3KHU41
125K03-4269-485400C2	NUM3-B	A15P0450/000AAAAA000F0000	RK-PVBG3KOS41
125K03-4269-485400C2	NUM4-316	A15P0450/000AAAAA000F0000	RK-PVBG3LS41
125-QC	NUM6-316	A15P0490/000AAAAA000A0000	RK-PVBG3RFS41
125-QC	NUM6-6MO	A15P0490/000AAAAA000A0000	RK-PVBG3SBN42
12-5TRMTXSS	NUM6-B	A15P0500/000AAAAA000A0000	RK-PVBG3SBN43
12-5TRTXS	NUM6-HC	A15P0500/000AAAAA000A0000	RK-PVBG3SBV42
12-6 FBZ-SS	NUM6-M	A15P0500/000AAAAA000F0000	RK-PVBG3SBV43
12-6 FHC-SS	NUM6-TI	A15P0500/000AAAAA000F0000	RK-PVBG3SKS42
12-6 FTX-S	NUM8-316	A15P0500/000AAAAAAG0A0000	RK-PVBG3SLS41
12-6 HBZ-SS	NUM8-625	A15P0500/000AAAAAAG0A0000	RK-PVBG3SRS41
12-6 MHN-SS	NUM8-6MO	A15P0500/000AAAAABS0A0000	RK-PVBG3SRS45
12-6 RA-SS	NUM8-B	A15P0500/000AAAAABS0A0000	RK-PVBG3SSB42
12-6 RB-B	NUM8-M	A15P0500/000CAAAA000A0000	RK-PVBG3SSL41
12-6 RB-S	NUT DIE M12	A15P0500/000CAAAA000A0000	RK-PVBG3SSR41
12-6 RB-SS	NUT DIE M16	A15P0530/000AAAAA000F0000	RK-PVBG3VTM41
12-6 TRBU-S	NUT DIE M20	A15P0530/000AAAAA000F0000	RK-PVBG3WPM41
12-6 TRBZ-SS	NUT DIE M25	A15P0550/000AAAAA000A0000	RK-PVBG3WZM41
12-6 TRLO-S	NV310EAWR7C00	A15P0550/000AAAAA000A0000	RK-PVBG4APLR144
12-6 TRTX-S	NV860QAHB9C00	A15P0600/000AAAAA000A0000	RK-PVBG4GLE40
12-6 TRTX-SS	NVH081S	A15P0600/000AAAAA000A0000	RK-PVBG4KH040
12-6 TRW-SS	NX110EAPB1020	A15P0600/000AAAAA000F0000	RK-PVBG4KHK40
12-6-12JMTXS	NX110EAPB7010	A15P0600/000AAAAA000F0000	RK-PVBG4KHM40
1261L-11	NX110EAPR1014	A15P0600/000AAAAA000X0000	RK-PVBG4KHS40

1261L-11	NX110EAPR4000	A15P0600/000AAAAA000X0000	RK-PVBG4KHT40
12622FIL	NX110EAPR4001	A15P0600/000ACAAA000A0000	RK-PVBG4KHU40
12622FIL	NX110EAPR4005	A15P0600/000ACAAA000A0000	RK-PVBG4KHW40
12630FIL	NX110EAPR4300	A15P0605/000AAAAA000A0000	RK-PVBG4KHY40
12630FIL	NX110EAPR4305	A15P0605/000AAAAA000A0000	RK-PVBG4KHZ40
12639FIL	NX110EAPR7000	A15P0620/000AAAAA000A0000	RK-PVBG4KOS40
12639FIL	NX110EAPR7001	A15P0620/000AAAAA000A0000	RK-PVBG4LS40
1263FIL	NX205AAVB7101	A15P0650/000AAAAA000A0000	RK-PVBG4RFS40
1263FIL	NX205EAVR7000	A15P0650/000AAAAA000A0000	RK-PVBG4SBN43
12646FIL	NX205EYUR6000	A15P0650/000AAAAA000F0000	RK-PVBG4SKS42
12646FIL	NX210AATB7101	A15P0650/000AAAAA000F0000	RK-PVBG4SLS40
12647FIL	NX210EAGR1202	A15P0700/000AAAAA000A0000	RK-PVBG4SRS42
12647FIL	NX210EATB7100	A15P0700/000AAAAA000A0000	RK-PVBG4VTM40
1264FIL	NX210EATR1000	A15P0700/000AAAAA000F0000	RK-PVBG4WPM40
1264FIL	NX210EATR4012	A15P0700/000AAAAA000F0000	RK-PVBG4WPS40
12660-00330	NX210EATR4305	A15P0700/000AAAAA000X0000	RK-PVBG4WZM40
12660-00330	NX210EATR7000	A15P0700/000AAAAA000X0000	RK-PVBG4WZM-PTFE40
12673FIL	NX210EATR7001	A15P0750/000AAAAA000A0000	RK-PVBG4ZEDM40
12673FIL	NX210EATR7112	A15P0750/000AAAAA000A0000	RK-PVBG4ZEDMN40
12674FIL	NX210EATR7300	A15P0750/000AAAAAAG0A0000	RK-PVBG5APLR1
12674FIL	NX210ESTR7000	A15P0750/000AAAAAAG0A0000	RK-PVBG5GLE40
12675FIL	NX210EYPR6000	A15P0750/000ACAAA000A0000	RK-PVBG5KH041
12675FIL	NX210EYPR6001	A15P0750/000ACAAA000A0000	RK-PVBG5KH241
12691FIL	NX310EAFR7019	A15P0800/000AAAAA000A0000	RK-PVBG5KH341
12691FIL	NX310EAIR1001	A15P0800/000AAAAA000A0000	RK-PVBG5KHT41
12697FIL	NX310EAIR7001	A15P0800/000AAAAA000F0000	RK-PVBG5KHU41
12697FIL	NX310EAIR7F00	A15P0800/000AAAAA000F0000	RK-PVBG5KHW41
12698FIL	NX310EAKB1101	A15P0850/000AAAAA000F0000	RK-PVBG5KHY41
12698FIL	NX310EAKB7100	A15P0850/000AAAAA000F0000	RK-PVBG5KHZ41
12-6F42EDMXS	NX310EAKB7101	A15P0900/000AAAAA000A0000	RK-PVBG5KOS40
12-6F42EDMXSS	NX310EAKB7101	A15P0900/000AAAAA000A0000	RK-PVBG5LS40
12-6F4OMXS	NX310EAKB7400	A15P0950/000AAAAA000A0000	RK-PVBG5RFS40
12-6G4MK4S	NX310EAKB7401	A15P0950/000AAAAA000A0000	RK-PVBG5ROG40
12-6G4MK4SS	NX310EAKB7F00	A15P1000/000AAAAA000A0000	RK-PVBG5SBN42
12-6HMK4S	NX310EAKB7F01	A15P1000/000AAAAA000A0000	RK-PVBG5SKS42
12-6HMK4SS	NX310EAKR0001	A15P1000/000AAAAA000F0000	RK-PVBG5SLS40
126K	NX310EAKR1001	A15P1000/000AAAAA000F0000	RK-PVBG5SRL46
126K	NX310EAKR7000	A15P1000/000AAAAA000X0000	RK-PVBG5SRR46
12-6TRLOS	NX310EAKR7000	A15P1000/000AAAAA000X0000	RK-PVBG5SRS42
12-6TRMLOSS	NX310EAKR7001	A15P1050/000AAAAA000A0000	RK-PVBG5SSL40
12-6TRMTXSS	NX310EAKR7001	A15P1050/000AAAAA000A0000	RK-PVBG5SSR40
12-6TRTXS	NX310EAKR7030	A15P1050/000EAAAA000A0000	RK-PVBG5WPM40
127-004006	NX310EAKR7300	A15P1050/000EAAAA000A0000	RK-PVBG5WZM40
127-004016	NX310EAKR7301	A15P1067/000AAAAA000F0000	RK-PVBG5WZMX593640
127-004021	NX310EAKR7301	A15P1067/000AAAAA000F0000	RK-PVCFAF1N1
127-004047	NX310EAKR7315	A15P1100/000AAAAA000A0000	RK-PVCFAFCN1
127-004060	NX310EAPB7100	A15P1100/000AAAAA000A0000	RK-PVCFAFT1N1
127-006014	NX310EAPB7101	A15P1100/000AAAAA000F0000	RK-PVCFAFTPN1
127-006016	NX310EAPR7000	A15P1100/000AAAAA000F0000	RK-PVCFAPVN1
12705FIL	NX310EAPR7001	A15P1200/000AAAAA000A0000	RK-PVCFAPVV1
12705FIL	NX310EAPR7010	A15P1200/000AAAAA000A0000	RK-PVCFAUPMN1
12718FIL	NX310EAPR7112	A15P1200/000AAAAA000F0000	RK-PVCFAUPRN1
12718FIL	NX310EAPR7301	A15P1200/000AAAAA000F0000	RK-PVCFAUPRV1

12719FIL	NX310ERKR7000	A15P1200/010AAAAA00YA0000	RK-PVCFCF1N1
12719FIL	NX310ESKB7100	A15P1200/010AAAAA00YA0000	RK-PVCFCF1N1X5807
1271FIL	NX310ESPB7400	A15P1250/000AAAAA000A0000	RK-PVCFCF1V1
1271FIL	NX310ESPB7A00	A15P1250/000AAAAA000A0000	RK-PVCFCFCN1
1272FIL	NX310ESPB7C00	A15P1300/000AAAAA000A0000	RK-PVCFCFCV1
1272FIL	NX310ESPB7C01	A15P1300/000AAAAA000A0000	RK-PVCFCFPN1
1273FIL	NX310ESPB7F01	A15P1300/000AAAAA000F0000	RK-PVCFCPVN1
1273FIL	NX310ETKB7100	A15P1300/000AAAAA000F0000	RK-PVCFCUPMN1
12748FIL	NX310ETKR7001	A15P1300/000AAAAA000X0000	RK-PVCFCUPPN1
12748FIL	NX310EUPR7001	A15P1300/000AAAAA000X0000	RK-PVCFCUPRN1
1274FIL	NX310EYFR6000	A15P1350/000AAAAA000A0000	RK-PVCFEF1N1
1274FIL	NX310EYKR6000	A15P1350/000AAAAA000A0000	RK-PVCFEFCN1
1274FIL	NX310EYKR6001	A15P1350/000EAAAA000A0000	RK-PVCFEFT1N1
1274FIL	NX310EYKR6002	A15P1350/000EAAAA000A0000	RK-PVCFEFT2N1X5939
12753FIL	NX310EYPR6000	A15P1400/000AAAAA000A0000	RK-PVCFEPVN1
12753FIL	NX310EYPR6001	A15P1400/000AAAAA000A0000	RK-PVCFEPVV1
1275FIL	NX420EAJB7100	A15P1400/000AAAAA000F0000	RK-PVCFEU2N1
1275FIL	NX420EAJB7101	A15P1400/000AAAAA000F0000	RK-PVCFEUPKN1
1275FIL	NX420EAJB7400	A15P1410/000ACABA000A0000	RK-PVCFEUPMN1
1275FIL	NX420EAJB7401	A15P1410/000ACABA000A0000	RK-PVCFEUPPN1
1276FIL	NX420EAJR7000	A15P1500/000AAAAA000A0000	RK-PVCFEUPRN1
1276FIL	NX420EAJR7001	A15P1500/000AAAAA000A0000	RK-PVCFEUPRV1
1277FIL	NX420EAJR7019	A15P1500/000AAAAA000F0000	RK-PVCLACBN1
1277FIL	NX420EAJR7300	A15P1500/000AAAAA000F0000	RK-PVCLACCN1
12781FIL	NX420EAPB7100	A15P1550/000EAAAA000A0000	RK-PVCLALAN1
12781FIL	NX420EAPB7101	A15P1550/000EAAAA000A0000	RK-PVCLALCN1
1278FIL	NX420EAPB7111	A15P1600/000AAAAA000A0000	RK-PVCLCCAN1
1278FIL	NX420EAPR7000	A15P1600/000AAAAA000A0000	RK-PVCLCCBN1
1279FIL	NX420EAPR7000	A15P1600/000AAAAA000F0000	RK-PVCLCCCN1
1279FIL	NX420EAPR7001	A15P1600/000AAAAA000F0000	RK-PVCLCLAN1
1279HFIL	NX420EAPR7019	A15P1700/000AAAAA000A0000	RK-PVCLCLCN1
1279HFIL	NX420EAPR7101	A15P1700/000AAAAA000A0000	RK-PVCLECAN1
12-8 B2HF-SS	NX420EAPR7300	A15P1800/000AAAAA000A0000	RK-PVCLECBN1
12-8 C4BU-S	NX420EAPR7301	A15P1800/000AAAAA000A0000	RK-PVCLECCN1
12-8 C5BU-S	NX420EAVB7100	A15P1900/000AAAAA000A0000	RK-PVCLELAN1
12-8 C5OLO-S	NX420EAVB7101	A15P1900/000AAAAA000A0000	RK-PVCLELBN1
12-8 C5OX-S	NX420EAVR7000	A15P2000/000AAAAA000A0000	RK-PVCLELCN1
12-8 CBU-S	NX420EAVR7001	A15P2000/000AAAAA000A0000	RK-PVCPADS1N1
12-8 CBZ-SS	NX420EAVR7024	A15P2050/000EAAAA000A0000	RK-PVCPAHS1N1
12-8 CTX-B	NX420EAXR7F00	A15P2050/000EAAAA000A0000	RK-PVCPAWS1N1
12-8 CTX-S	NX420ESJB7C00	A15P2820/000ACAAA000A0000	RK-PVCPCDS1V1
12-8 DBZ-SS	NX420ESPB7C00	A15P2820/000ACAAA000A0000	RK-PVCPCHS1N1
12-8 DTX-S	NX420ESPB7F00	A15Q0020/000AAAAA000A0000	RK-PVCPCWS1N1
12-8 F5BU-S	NX420ESPR7100	A15Q0020/000AAAAA000A0000	RK-PVCPEHS1V1
12-8 F5OG5-S	NX420ESPR7400	A15Q0025/000AAAAA000A0000	RK-PVCPEWS1N1
12-8 F5OG5-SS	NX420EUVR7001	A15Q0025/000AAAAA000A0000	RK-PVCRAR1N1
12-8 F5OLO-S	NX420EVPR7C00	A15Q0040/000AAAAA000A0000	RK-PVCRAR1N3
12-8 F5OX-S	NX420EWPR7F00	A15Q0040/000AAAAA000A0000	RK-PVCRARCN1
12-8 F6X-S	NX420EYKR6000	A15Q0050/000AAAAA000A0000	RK-PVCRCR1N1
12-8 FBU-S	NX420EYKR6001	A15Q0050/000AAAAA000A0000	RK-PVCRCR1N1X5807
12-8 FBZ-SS	NX420EYKR6011	A15Q0050/000AAAAA000X0000	RK-PVCRCR2N1
12-8 FHC-HC	NX420EYPR6000	A15Q0050/000AAAAA000X0000	RK-PVCRCRCN1
12-8 FHC-SS	NX420EYPR6001	A15Q0050/000AAAAC000A0000	RK-PVCRER1N1

12-8 FLO-S	NX420EYVR6000	A15Q0050/000AAAAC000A0000	RK-PVCRERCN1
12-8 FLO-SS	NX430EAFB7100	A15Q0060/000AAAAA000A0000	RKR105
12-8 FTX-S	NX430EAFB7101	A15Q0060/000AAAAA000A0000	RKR105
12-8 GBZ-SS	NX430EAFB7A01	A15Q0080/000AAAAA000A0000	RKR10YSS
12-8 GTX-S	NX430EAFR7000	A15Q0080/000AAAAA000A0000	RKR10YSS
12-8 HBZ-SS	NX430EAJB7100	A15Q0080/000AAAAA0B0A0000	RKR164Y
12-8 HTX-S	NX430EAJB7101	A15Q0080/000AAAAA0B0A0000	RKR164Y
12-8 MHLN-SS 3.0	NX430EALB7100	A15Q0080/000AAAAA0K0A0000	RKR210A
12-8 MHN-625	NX430EALB7101	A15Q0080/000AAAAA0K0A0000	RKR210A
12-8 MHN-6MO	NX430EALB7C00	A15Q0080/000AAAAAB00A0000	RKR210C
12-8 MHN-825	NX430EALR7000	A15Q0080/000AAAAAB00A0000	RKR210C
12-8 MHN-B	NX430EALR7001	A15Q0100/000AAAAA000A0000	RKR364KYSS
12-8 MHN-HC	NX430EALR7100	A15Q0100/000AAAAA000A0000	RKR364KYSS
12-8 MHN-M	NX430EALR7300	A15Q0120/000AAAAA0K0A0000	RK-S16-08251-0
12-8 MHN-SS	NX430EALR7400	A15Q0120/000AAAAA0K0A0000	RK-S16-39147-0
12-8 MHN-TI	NX430EAPB7100	A15Q0125/000AAAAA000A0000	RK-S16-39148-0
12-8 RA-625	NX430EAPB7101	A15Q0125/000AAAAA000A0000	RK-S16-39149-0
12-8 RA-6MO	NX430EAPB7401	A15Q0125/000AAAAA00YA0000	RK-S16-68998-0
12-8 RA-HC	NX430EAPR7000	A15Q0125/000AAAAA00YA0000	RK-S16-68998-5
12-8 RA-M	NX430EAPR7324	A15Q0125/000ACAAA000A0000	RK-S16-82000-0
12-8 RA-SS	NX430EAVB7101	A15Q0125/000ACAAA000A0000	RK-S26-42489-0
12-8 RB-625	NX430ESJB7C01	A15Q0145/000AAAAA000A0000	RK-S26-43181-0
12-8 RB-6MO	NX430ESLB7F01	A15Q0145/000AAAAA000A0000	RK-S26-55909-0
12-8 RB-825	NX430ESVB7101	A15Q0150/000AAAAA000A0000	RK-SD400/500
12-8 RB-B	NX430EUVR7001	A15Q0150/000AAAAA000A0000	RKT/A168
12-8 RB-HC	NX430EYFR6001	A15Q0160/000AAAAA000A0000	RKT/A385/1
12-8 RB-M	NX430EYLR6000	A15Q0160/000AAAAA000A0000	RKT/A386
12-8 RB-S	NX430EYLR6001	A15Q0160/000AAAAABG0A0000	RK-TDA016EW06B2V
12-8 RB-SS	NX430EYMR6001	A15Q0160/000AAAAABG0A0000	RK-TDA016EW09A2N
12-8 RB-TI	NX620EAJR7000	A15Q0160/000ABAAA000A0000	RK-TDA016EW09B2N
12-8 SE-SS	NX620EARB7100	A15Q0160/000ABAAA000A0000	RK-TDA016EW09B2V
12-8 T2HF-SS	NX620EARB7101	A15Q0160/000ABAAA000F0000	RK-TDA016N
12-8 T2HG-SS	NX620EARB7400	A15Q0160/000ABAAA000F0000	RK-TDA025EW09A2N
12-8 TL-S	NX620EARB7401	A15Q0180/000AAAAA00YA0000	RK-TDA025EW09B2N
12-8 TRBU-S	NX620EARR7000	A15Q0180/000AAAAA00YA0000	RK-TDA025EW09B2V
12-8 TRBU-SS	NX620EAVB7100	A15Q0180/140AAAAA000A0000	RK-TDA025N
12-8 TRBZ-SS	NX620EAVR7000	A15Q0180/140AAAAA000A0000	RK-TDA032EW09A2N
12-8 TRLO-S	NX620ESRB7F01	A15Q0200/000AAAAA000A0000	RK-TDA032EW09B2N
12-8 TRLO-S BP	NX620EYRR6001	A15Q0200/000AAAAA000A0000	RK-TDA032EW09B2V
12-8 TRTX-B	NX630EAGB7101	A15Q0200/000AAAAA000X0000	RK-TDA032N
12-8 TRTX-S	NX630EAGR7400	A15Q0200/000AAAAA000X0000	RK-TDA040EW09A2N
12-8 TRW-SS	NX630EANB7100	A15Q0200/000AAAAA0S0A0112	RK-TDA040EW09B2N
12-8 VTX-B	NX630EANB7101	A15Q0200/000AAAAA0S0A0112	RK-TDA040EW09B2V
12-8 VTX-S	NX630EANB7400	A15Q0200/000AAAAB0G0A0000	RK-TDA040N
128-000050	NX630EANR7000	A15Q0200/000AAAAB0G0A0000	RK-TDA050EW09A2N
128-000110	NX630EANR7101	A15Q0200/000CAAAA0S0A0112	RK-TDA050EW09B2N
128-000114	NX630EANR7112	A15Q0200/000CAAAA0S0A0112	RK-TDA050EW09B2V
128-000116	NX630EANR7313	A15Q0200/080AAAAA00YA0000	RK-TDA050N
128-000118	NX630EANR7400	A15Q0200/080AAAAA00YA0000	RK-TDA063EW09A2N
128-000132	NX630EARB7100	A15Q0220/000ACAAA000A0000	RK-TDA063EW09B2N
128-003857	NX630EARB7400	A15Q0220/000ACAAA000A0000	RK-TDA063N
128-100246	NX630EARB7401	A15Q0250/000AAAAA000A0000	RK-TDA080EW09A2N
128-100276	NX630EARB7F01	A15Q0250/000AAAAA000A0000	RK-TDA080EW09B2N

128-125	NX630EARR7300	A15Q0250/000AAAAA0G0A0000	RK-TDA080N
128-126	NX630EARR7400	A15Q0250/000AAAAA0G0A0000	RK-TDA100EW09A2N
1281FIL	NX630EAVR7310	A15Q0250/000ABAAA000A0000	RK-TDA100EW09B2N
1281FIL	NX630EUNR7001	A15Q0250/000ABAAA000A0000	RK-TDA100N
128-200896	NX630EUNR7101	A15Q0280/000AAAAA000A0000	RK-TDP/Q032-050-8N
1282FIL	NX630EXGB7101	A15Q0280/000AAAAA000A0000	RK-TDP/Q063-100-8N
1282FIL	NX630EYLR6001	A15Q0290/000AAAAA000A0000	RK-TEA032EW09B2N
1283FIL	NX630EZRR7202	A15Q0290/000AAAAA000A0000	RK-TEA040EW09A2N
1283FIL	NX820EALR7203	A15Q0300/000AAAAA000A0000	RK-TEA040EW09B2N
12852FIL	NX820EARB7100	A15Q0300/000AAAAA000A0000	RK-TEA050EW09A2N
12852FIL	NX820EARB7111	A15Q0300/000AAAAA000F0000	RK-TEA050EW09B2N
12853FIL	NX820EARB7400	A15Q0300/000AAAAA000F0000	RK-TEA050EW09B2V
12853FIL	NX820EARB7411	A15Q0320/000AAAAA000A0000	RK-TEA063EW09A2N
1285FIL	NX820EARR7000	A15Q0320/000AAAAA000A0000	RK-TEA063EW09B2N
1285FIL	NX820EARR7012	A15Q0320/000AAAAAB00A0000	RK-TEA080EW09A2N
12867FIL	NX820EARR7112	A15Q0320/000AAAAAB00A0000	RK-TEA080EW09B2N
12867FIL	NX820EARR7300	A15Q0320/000ABAAA000F0000	RK-TEA100EW09B2N
1286FIL	NX820EAXB7100	A15Q0320/000ABAAA000F0000	RK-TEH050EL09B2N
1286FIL	NX820EAXB7101	A15Q0335/000AAAAA0S0A0430	RK-TEH063EL09B2N
1287FIL	NX820EAXR7001	A15Q0335/000AAAAA0S0A0430	RK-TEH100EL09B2N
1287FIL	NX820EAXR7301	A15Q0350/000AAAAA000A0000	RK-TELP4E100V
1287FIL	NX820EUXR7001	A15Q0350/000AAAAA000A0000	RKVE25-V6
1287FIL	NX820EYXR6000	A15Q0350/000AAAAA000G0000	RKVE32
12-8C3MXS	NX840EAJR7000	A15Q0350/000AAAAA000G0000	RKVE40
12-8C4OMLOS	NX840EAKB7100	A15Q0380/000AAAAA000A0000	RK-VMY..H06/10
12-8C4OMLOSS	NX840EAKB7101	A15Q0380/000AAAAA000A0000	RL05/05
12-8C4OMXS	NX840EAKB7400	A15Q0380/000AAAAA000F0000	RL05/05N
12-8C4OMXSS	NX840EAKR7100	A15Q0380/000AAAAA000F0000	RL05/05R
12-8C4OMXSV	NX840EAKR7300	A15Q0385/000AAAAA000A0000	RL05/10
12-8C5OMLOS	NX840EAKR7301	A15Q0385/000AAAAA000A0000	RL10/05
12-8C5OMXS	NX840EALB7111	A15Q0385/000AAAAB0G0A0000	RL10/10
12-8C5OMXSS	NX840EAQB7100	A15Q0385/000AAAAB0G0A0000	RL10/10N
12-8CMTXSS	NX840EAQB7101	A15Q0400/000AAAAA000A0000	RL10/13
12-8EMTXS	NX840EAQR7001	A15Q0400/000AAAAA000A0000	RL10/13N
12-8F3MK4S	NX840EAQR7100	A15Q0400/000AAAAA000F0000	RL13/10
12-8F3MK4SS	NX840EAQR7318	A15Q0400/000AAAAA000F0000	RL13/10DX
12-8F3MXS	NX840EUKR7001	A15Q0400/000AAAAA000X0000	RL13/10FX
12-8F42EDMLOS	NX840EVQB7100	A15Q0400/000AAAAA000X0000	RL13/13
12-8F42EDMLOSS	NX840EYWR6001	A15Q0400/000AAAAABG0A0000	RL13/13DX
12-8F42EDMLOSSV	NX840EZKR6100	A15Q0400/000AAAAABG0A0000	RL13/13FX
12-8F42EDMLOSV	NX840EZQR7202	A15Q0420/000AAAAA000A0000	RL13/13N
12-8F42EDMXS	NX840VADR9001	A15Q0420/000AAAAA000A0000	RL13/17
12-8F42EDMXSBP	NX860EAJB7101	A15Q0445/000AAAAA000A0000	RL13/17N
12-8F42EDMXSS	NX860EAJB7401	A15Q0445/000AAAAA000A0000	RL17/13
12-8F4OMXS	NX860EAJB7501	A15Q0450/000AAAAA000A0000	RL17/13DX
12-8F4OMXSS	NX860EAJR7000	A15Q0450/000AAAAA000A0000	RL17/13FX
12-8F5OMXS	NX860EAJR7001	A15Q0500/000AAAAA000A0000	RL17/13N
12-8F5OMXSS	NX860EAJR7300	A15Q0500/000AAAAA000A0000	RL17/17
12-8F63MXS	NX860ETZR6C01	A15Q0500/000AAAAAAK0A0000	RL17/17DX
12-8F642EDMLS	NX860VAGB9101	A15Q0500/000AAAAAAK0A0000	RL17/17FX
12-8F642EDMLSS	NX860VAGR9400	A15Q0500/000ADAAA000A0000	RL17/17N
12-8F642EDMXS	NX860VAJB9100	A15Q0500/000ADAAA000A0000	RL17/21
12-8F642EDMXSS	NX860VAJB9101	A15Q0520/000AAAAA000F0000	RL17/21DX

12-8F64OMXS	NX860VAJB9401	A15Q0520/000AAAAA000F0000	RL17/21FX
12-8F64OMXSS	NX860VAJR9000	A15Q0550/000AAAAA000A0000	RL17/21N
12-8F6MK4S	OBZ 10-10-1/4-SS	A15Q0550/000AAAAA000A0000	RL17/26DX
12-8F6MK4SS	OBZ 12-12-1/2-SS	A15Q0600/000AAAAA000A0000	RL17/IT13DX
12-8F6MXSS	OBZ 12-12-1/4-SS	A15Q0600/000AAAAA000A0000	RL17/IT13FX
12-8FMK4S	OBZ 12-12-3/8-SS	A15Q0600/000AAAAA000F0000	RL17/IT17FX
12-8FMK4SS	OBZ 16-16-1/2-SS	A15Q0600/000AAAAA000F0000	RL17/IT21FX
12-8FMTXB	OBZ 6-6-1/4-SS	A15Q0600/000AAAAA000G0000	RL21/17
12-8FMTXS	OBZ 6-6-1/8-SS	A15Q0600/000AAAAA000G0000	RL21/17N
12-8FMTXSS	OBZ 8-8-1/8-SS	A15Q0600/000AAAAA00YA0000	RL21/21
12-8G4MK4S	ODR06L/SDCFX	A15Q0600/000AAAAA00YA0000	RL21/26
12-8G4MK4SS	ODR06S/SDCFX	A15Q0650/000AAAAA000A0000	RL21/26N
12-8G4MXS	ODR06S/SDX	A15Q0650/000AAAAA000A0000	RLP12X
12-8GMTXSS	ODR08S/SDX	A15Q0650/000ADAAA000A0000	RLP16X
12-8H6MK4S	ODR10S71X	A15Q0650/000ADAAA000A0000	RLP20X
12-8HMK4S	ODR10SOR71	A15Q0660/000AAAAA000A0000	RM2AT07LV
12-8HMK4SS	ODR12S71X	A15Q0660/000AAAAA000A0000	RM2AT07SV
12-8HMTXSS	ODR12SCFX	A15Q0700/000AAAAA000A0000	RM2AT17KV
128PX-4-03-LPG	ODR12SOR71	A15Q0700/000AAAAA000A0000	RM2AT17LV
12-8R FBZ-SS	ODR14S71X	A15Q0780/000AAAAA000A0000	RM2AT17SV
12-8TRMLOSS	ODR14SOR71	A15Q0780/000AAAAA000A0000	RM2AT25KV
12-8TRMTXSS	ODR15LCFX	A15Q0800/000AAAAA000A0000	RM2AT25LV
12-8TRTXS	ODR16SOR71	A15Q0800/000AAAAA000A0000	RM2AT25SV
12914FIL	ODR18L71X	A15Q0820/000AAAAA000A0000	RM2AT35KV
12914FIL	ODR18LCFX	A15Q0820/000AAAAA000A0000	RM2AT35SV
12915FIL	ODR20S71X	A15Q0840/000AAAAA000X0000	RM2BT07KV
12915FIL	ODR20SOR71	A15Q0840/000AAAAA000X0000	RM2BT07LV
12916FIL	ODR22L71X	A15Q0850/000AAAAA000A0000	RM2BT07SV
12916FIL	ODR22LCFX	A15Q0850/000AAAAA000A0000	RM2BT17KV
1291FIL	ODR25S71X	A15Q0900/000AAAAA000A0000	RM2BT17LV
1291FIL	ODR25SCFX	A15Q0900/000AAAAA000A0000	RM2BT17SV
12927FIL	ODR25SOR71	A15Q0900/000AAAAA000F0000	RM2BT25KV
12927FIL	ODR28LCFX	A15Q0900/000AAAAA000F0000	RM2BT25LV
12928FIL	ODR30S71X	A15Q0900/000AAAAAAK0A0000	RM2BT25SV
12928FIL	ODR30SCFX	A15Q0900/000AAAAAAK0A0000	RM2BT35KV
12929FIL	ODR30SOR71	A15Q0920/000AAAAA000A0000	RM2BT35SV
12929FIL	ODR35LCFX	A15Q0920/000AAAAA000A0000	RM3AT07SVHT
12930FIL	ODR38SOR71	A15Q1000/000AAAAA000A0000	RM3AT21KVHT
12930FIL	ODR42LCFX	A15Q1000/000AAAAA000A0000	RM3AT21SHT
12931FIL	OEM750	A15Q1000/000AAAAA000F0000	RM3AT21SVHT
12931FIL	OEM750X	A15Q1000/000AAAAA000F0000	RM3AT35KVHT
12932FIL	OEM750X-M2	A15Q1100/000AAAAA000A0000	RM3AT35LVHT
12932FIL	OEM83-135-MO	A15Q1100/000AAAAA000A0000	RM3AT35SVHT
12933FIL	OEM83-93-MO	A15Q1100/000AAAAABP0A0000	RM3BT07KV
12933FIL	OLK605	A15Q1100/000AAAAABP0A0000	RM3BT07LV
12934FIL	OLK611	A15Q1200/000AAAAA000A0000	RM3BT07SV
12934FIL	OLUBE-884-4-TFD	A15Q1200/000AAAAA000A0000	RM3BT17KV
12935FIL	OM/4047-T1	A15Q1200/000AAAAA000F0000	RM3BT17SV
12935FIL	OPL32-00000-02200-00X	A15Q1200/000AAAAA000F0000	RM3BT25KV
12968FIL	OPL32-00000-02200-00X	A15Q1300/000AAAAA000A0000	RM3BT25SV
12968FIL	OR00027	A15Q1300/000AAAAA000A0000	RM3BT35SV
1296FIL	OR00029	A15Q1300/000AAAAA000F0000	RM3CC21SHT
1296FIL	OR00030	A15Q1300/000AAAAA000F0000	RM3CC35SHT

1297FIL	OR00031	A15Q1400/000AAAAA000A0000	RM3PT07KV
1297FIL	OR0142X152V	A15Q1400/000AAAAA000A0000	RM3PT07LV
12980FIL	OR02006	A15Q1400/000AAAAA000F0000	RM3PT17KV
12980FIL	OR02028	A15Q1400/000AAAAA000F0000	RM3PT17LV
12980FIL	OR02031	A15Q1500/000AAAAA000A0000	RM3PT17SV
12980FIL	OR02070	A15Q1500/000AAAAA000A0000	RM3PT25KV
12981FIL	OR02084	A15Q1500/000AAAAA000F0000	RM3PT25LV
12981FIL	OR0284X262V	A15Q1500/000AAAAA000F0000	RM3PT25SV
1298FIL	OR0368X178E	A15Q1510/000AAAAA000A0000	RM3PT35KV
1298FIL	OR0368X178E	A15Q1510/000AAAAA000A0000	RM3PT35LV
12A-B8LJ2-BN-SSP	OR04004	A15Q1510/000ACAAA000A0000	RM3PT35SV
12A-B8LJ2-SSP	OR04008	A15Q1510/000ACAAA000A0000	RM4AT25SVHT
12A-B8LJ2-SSP-C3	OR04033	A15Q1600/000AAAAA000A0000	RM4AT35SVHT
12A-B8LJ2-V-SSP	OR04043	A15Q1600/000AAAAA000A0000	RM4BT07SVHT
12A-B8LJ-BN-SSP	OR0434X353V	A15Q1600/000AAAAA000F0000	RM4BT35SVHT
12A-B8LJ-SSP	OR0447X178P	A15Q1600/000AAAAA000F0000	RM4PT07SVHT
12A-B8LJ-V-SSP	OR0500X150V	A15Q1600/000ACAAA000A0000	RM4PT25KVHT
12A-B8XJ2-SSP	OR0500X200V	A15Q1600/000ACAAA000A0000	RM4PT25SVHT
12A-B8XJ2-SSP-C3	OR0500X250E	A15Q1700/000AAAAA000A0000	RM4PT35KVHT
12A-B8XJ-SSP	OR0500X250P	A15Q1700/000AAAAA000A0000	RM4PT35SVHT
12A-C12L-1/3-BN-SS	OR0500X250V	A15Q1700/000AAAAA000F0000	RM6PT07SV
12A-C12L-1/3-SS	OR06004	A15Q1700/000AAAAA000F0000	RM6PT17SV
12A-C12L-100-SS	OR0602X262SS	A15Q1800/000AAAAA000A0000	RM6PT25SV
12A-C12L-10-BN-SS	OR06032	A15Q1800/000AAAAA000A0000	RM6PT35SV
12A-C12L-10-SS	OR0607X178P	A15Q1800/000AAAAA000F0000	RMVE2005
12A-C12L-1-B	OR0700X200V	A15Q1800/000AAAAA000F0000	RO20-U
12A-C12L-1-BN-SS	OR0759X262E	A15Q1900/000AAAAA000A0000	RO20-U
12A-C12L-1-EPR-SS	OR0765X178E	A15Q1900/000AAAAA000A0000	RO30-U
12A-C12L-1-SS	OR0765X265E	A15Q1950/000AAAAA000A0000	RO30-U
12A-C12L-25-BN-SS	OR0765X265P	A15Q1950/000AAAAA000A0000	RO3-U
12A-C12L-25-SS	OR08003	A15Q2000/000AAAAA000A0000	RO3-U
12A-C12L-50-SS	OR0800X150V	A15Q2000/000AAAAA000A0000	ROD-25.4
12A-C12L-5-BN-SS	OR0800X200VS	A15Q2000/000AAAAA000F0000	ROD-34.9
12A-C12L-5-EPR-SS	OR0890X190V	A15Q2000/000AAAAA000F0000	ROD-44.5
12A-C12L-5-SS	OR0912X353P	A15Q2200/000AAAAA000A0000	ROD-50.8
12A-C12L-75-SS	OR0912X353V	A15Q2200/000AAAAA000A0000	RON106.4X
12A-F12L-100-SS	OR0925X178V	A15Q2600/000AAAAA000A0000	RON106X
12A-F12L-10-SS	OR10.5X1.5X	A15Q2600/000AAAAA000A0000	RON108X
12A-F12L-450-SS	OR10.77X2.62VITX	A15Q2600/000ACAAA000A0000	RON208X
12A-F12L-50-BN-SS	OR10.77X2.62X	A15Q2600/000ACAAA000A0000	RON209.5X
12A-F12L-50-SS	OR1000X300V	A15Q2900/000AAAAA000A0000	RON210X
12A-F12L-5-SS	OR10017	A15Q2900/000AAAAA000A0000	RON212.7X
12A-F16L-50-BN-SS	OR1077X262E	A161X57	RON212X
12A-LC16L-SS	OR10X1.5VITX	A161X57	RON310X
12AP1CF	OR10X1.5X	A16K0070/000ADAAA000A0000	RON312.7X
12AP2CF	OR11.3X2.2VITX	A16K0070/000ADAAA000A0000	RON312X
12A-SWB12L-RT-V-SS	OR11.3X2.2X	A16K0125/000ADAAA000A0000	RON313.5X
12A-SWB12L-RT-V-SS-C3	OR11.3X2.4X	A16K0125/000ADAAA000A0000	RON314X
12A-U16LB-G-SS	OR11.89X1.98X	A16K0160/000ADAAA000A0000	RON315X
12A-U16LB-T-SS	OR110.72X3.53X	A16K0160/000ADAAA000A0000	RON316X
12A-U16LR-G-SS-HT	OR12.42X1.78VITX	A16K0200/000ADAAA000A0000	RON414X
12A-U16LR-T-SS	OR12.5X1.5VITX	A16K0200/000ADAAA000A0000	RON415X
12A-V12LN-SS	OR12.5X1.5X	A16K0250/000ADABA0A0A0000	RON416X

12BBMTXS	OR12.5X2X	A16K0250/000ADABA0A0A0000	RON417.2X
12BBMTXSS	OR12.5X2XBP	A16L0050/000AAAAA000A0000	RON418X
12BC12-316	OR1200X100E	A16L0050/000AAAAA000A0000	RON419X
12BC12-6MO	OR1200X100P	A16L0400/000AAAAA000A0000	RON420X
12BF12-316	OR1200X100V	A16L0400/000AAAAA000A0000	RON421.3X
12BF12-6MO	OR1200X200VS	A16M0320/000ADAAA000A0000	RON422X
12BF12-825	OR120V	A16M0320/000ADAAA000A0000	RON425X
12BF12-B	OR1237X262E_01	A16M1150/000AAAAA000A0000	ROND106.4X
12BF12-T	OR1237X262P	A16M1150/000AAAAA000A0000	ROND106X
12BFGL/LK40OMDCF	OR1237X262V	A16N0100/000AAAAA000A0000	ROND108X
12BLEN12-316	OR12X2VITX	A16N0100/000AAAAA000A0000	ROND208X
12BLEN12-6MO	OR12X2X	A16N0100/000ADAAA000A0000	ROND209.5X
12BLEN12-825	OR13.3X2.2X	A16N0100/000ADAAA000A0000	ROND210/08X
12BLEN12-MMX	OR13.94X2.62X	A16N0500/000AABAA000A0000	ROND210X
12BLP12-316	OR1300X350P	A16N0500/000AABAA000A0000	ROND212.7X
12BLP12-625	OR136.12X3.53V70X	A16N0720/000AAAAA000A0000	ROND212/10X
12BLP12-6MO	OR136.12X3.53X	A16N0720/000AAAAA000A0000	ROND212X
12BLP12-M	OR1360X270V	A16N0720/000ADAAA000A0000	ROND310X
12BMLS	OR13X2VITX	A16N0720/000ADAAA000A0000	ROND312.7X
12BMLSBP	OR1400X178P	A16N1200/000AABAA000A0000	ROND312X
12BMLSBPBLKOEL	OR1400X178V	A16N1200/000AABAA000A0000	ROND313.5X
12BMLSS	OR14X2X	A16N1200/000AABAAAG0A0000	ROND314X
12BMTXB	OR15.3X2.2X	A16N1200/000AABAAAG0A0000	ROND315/12X
12BMTXS	OR15.4X2.1VITX	A16P0080/000AAAAA000A0000	ROND315X
12BMTXSBP	OR15.54X2.62VITX	A16P0080/000AAAAA000A0000	ROND316/12X
12BMTXSS	OR15.54X2.62X	A16P0250/000AAAAA000A0000	ROND316X
12BN12-316	OR15X2VITX	A16P0250/000AAAAA000A0000	ROND414X
12BUWS	OR16.36X2.21X	A16Q0200/000AAAAA000A0000	ROND415X
12C3MXS	OR16.36X2.2VITX	A16Q0200/000AAAAA000A0000	ROND416X
12C3MXSS	OR16.3X2.4VITX	A16Q0250/000AAAAA000A0000	ROND417.2X
12C3P4S	OR16.3X2.4X	A16Q0250/000AAAAA000A0000	ROND418X
12C3T4S	OR1600X400P	A16Q0400/000ADAAA000A0000	ROND419X
12C4OMLOS	OR1600X400V	A16Q0400/000ADAAA000A0000	ROND420X
12C4OMLOSS	OR16X1.5VITX	A16Q0650/000ADAAA000A0000	ROND421.3X
12C4OMLOSV	OR16X1.5X	A16Q0650/000ADAAA000A0000	ROND422/18X
12C4OMXS	OR16X2X	A16-R11/2-R	ROND422X
12C4OMXSBP	OR17.96X2.62VITX	A16-R11/4-R	ROP106.4X
12C4OMXSS	OR17.96X2.62X	A18-C3-BK00	ROP106X
12C4OMXSV	OR17X2.5X	A18-C3-BK00	ROP108X
12C5OMLOS	OR17X3X	A18-C4-BL00	ROP208X
12C5OMLOSS	OR18.2X3VITX	A18-C4-BL00	ROP209.5X
12C5OMXS	OR18.64X3.53VITX	A2030-7310	ROP210X
12C5OMXSS	OR18.64X3.53X	A2040-7311	ROP212.7X
12C6MK4S	OR18.72X2.62X	A20RS25-1P-02	ROP212X
12C6MK4SS	OR1800X150V	A20RS25-1P-02	ROP310X
12C6MLOS	OR1872X262V	A21M0200/000AAAAA000A0000	ROP312.7X
12C6MLOSS	OR18X1.5VITX	A21M0200/000AAAAA000A0000	ROP312X
12C6MXS	OR18X1.5X	A21N0025/000ABAAA000A0000	ROP313.5X
12C6MXSBP	OR18X3.15X	A21N0025/000ABAAA000A0000	ROP314X
12C6MXSBPNB	OR19.18X2.46X	A25217-000	ROP315X
12C6MXSS	OR19.3X2.2X	A25217-010	ROP316X
12CMTXSS	OR19.4X2.1VITX	A25217-045	ROP414X
12CNMLS	OR19X1.5X	A25217-100	ROP415X

12CNMXS	OR19X2.5VITX	A25217-200	ROP416X
12CPM1CF	OR20.3X2.4VITX	A25K0025/000AAAAA000F0000	ROP417.2X
12CPM1SS	OR20004	A25K0025/000AAAAA000F0000	ROP418X
12CPM2CF	OR20X1.5VITX	A25K0075/000AAAAA000A0000	ROP419X
12CPM2SS	OR20X1.5X	A25K0075/000AAAAA000A0000	ROP420X
12CYX-18-10	OR20X2.5VITX	A25K0080/000AAAAA000A0000	ROP421.3X
12E6MK4S	OR20X2.5X	A25K0080/000AAAAA000A0000	ROP422X
12E6MK4SS	OR20X2VITX	A25K0100/000AAAAA000A0000	ROPD106.4X
12ECR12-316	OR20X2X	A25K0100/000AAAAA000A0000	ROPD106X
12EE12-316	OR21.2X3X	A25K0110/000AAAAA000A0000	ROPD108X
12EE12-6MO	OR21.89X2.62VITX	A25K0110/000AAAAA000A0000	ROPD208X
12EE12-B	OR22X2.5X	A25K0150/000AAABB000A0000	ROPD209.5X
12EE12-IIY	OR23.47X2.95VITX	A25K0150/000AAABB000A0000	ROPD210X
12EE12-MMX	OR23.47X2.95X	A25K0160/000AAAAA000A0000	ROPD212.7X
12EMK4S	OR23.52X1.78VITX	A25K0160/000AAAAA000A0000	ROPD212X
12EMK4SS	OR23.6X2.9VITX	A25K0200/000AAAAA000A0000	ROPD310X
12EMLOSS	OR23.6X2.9X	A25K0200/000AAAAA000A0000	ROPD312.7X
12EMTXS	OR2340X353E	A25K0250/000AAABB000A0000	ROPD312/310X
12EMTXSBP	OR2340X353P	A25K0250/000AAABB000A0000	ROPD312X
12EMTXSS	OR2340X353V	A25K1000/000AAABB000A0000	ROPD313.5X
12ET12-316	OR23X3X	A25K1000/000AAABB000A0000	ROPD314X
12ET12-6MO	OR25.3X2.4VITX	A25L0025/000AAAAA000A0000	ROPD315X
12ET12-825	OR25X2VITX	A25L0025/000AAAAA000A0000	ROPD316/10X
12ET12-B	OR25X2X	A25L0040/000AAAAA000A0000	ROPD316X
12ET12-IIY	OR25X3.53VITX	A25L0040/000AAAAA000A0000	ROPD414X
12ET12-MMX	OR25X3.53X	A25L0050/000AAAAA000F0000	ROPD415X
12ET12-NNR	OR26X2.5VITX	A25L0050/000AAAAA000F0000	ROPD416X
12F22C6148A3F4C80	OR26X2.5X	A25L0080/000AAAAA000A0000	ROPD417.2X
12F22C6148A3F4C80	OR26X2VITX	A25L0080/000AAAAA000A0000	ROPD418X
12F23C2148ACFPH05	OR26X2X	A25L0120/000AAAAA000A0000	ROPD419X
12F23C2148ACFPH05	OR27X2.5X	A25L0120/000AAAAA000A0000	ROPD420/415X
12F3MK4S	OR29.2X3X	A25L0200/000AAAAA000A0000	ROPD420X
12F3MK4SS	OR29.6X2.9X	A25L0200/000AAAAA000A0000	ROPD421.3X
12F3MP4SS	OR29.74X2.95VITX	A25M0050/000AAAAA000A0000	ROPD422X
12F3MXS	OR29.74X2.95X	A25M0050/000AAAAA000A0000	ROT006010X40XXX-R--
12F3MXSBP	OR29.74X3.53X	A25M0075/000AAAAA000A0000	ROT007010X6011S-R--
12F3MXSS	OR30001	A25M0075/000AAAAA000A0000	ROT10510
12F3P4S	OR3134X353P	A25M0160/000AAAAA000A0000	ROT1051017319
12F3T4S	OR32.92X3.53VITX	A25M0160/000AAAAA000A0000	ROT14510
12F42EDMLOS	OR32.92X3.53X	A25M0160/000AAAAA000F0000	ROT1451018324
12F42EDMLOSBPNB	OR32.99X2.62X	A25M0160/000AAAAA000F0000	ROT1451024524
12F42EDMLOSEPDM	OR32X2.5VITX	A25M0200/000AAAAA000F0000	ROT701012011S
12F42EDMLOSS	OR32X2.5X	A25M0200/000AAAAA000F0000	ROT70109011
12F42EDMLOSSVCAP	OR33.3X2.4VITX	A25M0250/000AAAAA000A0000	ROT70109011S
12F42EDMLOSV	OR33X2.5VITX	A25M0250/000AAAAA000A0000	ROTA1051017319
12F42EDMXS	OR33X2.5X	A25M0250/000AAAAA000F0000	ROTA10510X8519X-D--
12F42EDMXSBP	OR35X2.5X	A25M0250/000AAAAA000F0000	ROTA1451012124
12F42EDMXSS	OR37.46X3VITX	A25M0250/000ACAAA000A0000	ROTA1451018324
12F4OMXS	OR37.46X3X	A25M0250/000ACAAA000A0000	ROTA1451018324S
12F4OMXSS	OR37.77X2.62VITX	A25M0280/000AAAAA000A0000	ROTA1451018324X-R--
12F4OMXSV	OR37.77X2.62X	A25M0280/000AAAAA000A0000	ROTA701012011S
12F5OMLOS	OR37.7X3.53VITX	A25N0025/000ABAAA000A0000	ROV04LLCFX
12F5OMLOSS	OR37.7X3.53X	A25N0025/000ABAAA000A0000	ROV04LLSA131BOFF71

12F5OMXS	OR3770X353V	A25N0200/000AAAAA000A0000	ROV06L31BOFF71
12F5OMXSS	OR38.6X2.9X	A25N0200/000AAAAA000A0000	ROV06L71
12F63MXS	OR38.7X2.8VITX	A25N0200/000AAAAA000F0000	ROV06L71X
12F63P4S	OR38X2.5VITX	A25N0200/000AAAAA000F0000	ROV06LCF
12F642EDMLS	OR39X2.5X	A25N0280/000AAAAA0A0A0000	ROV06LCFX
12F642EDMLSS	OR4.5X1.5VITX	A25N0280/000AAAAA0A0A0000	ROV06LLCFX
12F642EDMLSSVCAP	OR4.5X1.5X	A25P0025/000AAAAA000A0000	ROV06S71
12F642EDMLSV	OR41.2X3X	A25P0025/000AAAAA000A0000	ROV06S71X
12F642EDMXS	OR41X1.78X	A25P0025/000AAAAA000F0000	ROV06SCF
12F642EDMXSBP	OR41X2.5VITX	A25P0025/000AAAAA000F0000	ROV06SCFX
12F642EDMXSS	OR41X2.5X	A25P0050/000AAAAA000A0000	ROV06ZL71
12F64OMXS	OR43.69X3X	A25P0050/000AAAAA000A0000	ROV06ZLCF
12F64OMXSS	OR44.04X3.53X	A25P0100/000AAAAA000A0000	ROV06ZS71
12F65OMXS	OR44.17X1.78X	A25P0100/000AAAAA000A0000	ROV06ZSCF
12F6MXSS	OR44.6X2.9X	A25P0100/000AAAAA000F0000	ROV08L71
12FA12N-316	OR46X3VITX	A25P0100/000AAAAA000F0000	ROV08L71X
12FA12N-6MO	OR46X3X	A25P0100/000ABAAA000A0000	ROV08LCF
12FA12N-M	OR47.22X3.53VITX	A25P0100/000ABAAA000A0000	ROV08LCFX
12FA8N-316	OR47.22X3.53X	A25P0150/000AAAAA000A0000	ROV08LLCFX
12F-B8LJ2-SS	OR50.52X1.78X	A25P0150/000AAAAA000A0000	ROV08S71
12F-B8LJ2-SS	OR50V	A25P0150/000AAAAA000X0000	ROV08S71X
12F-B8XJ2-SS	OR53.57X3.53X	A25P0150/000AAAAA000X0000	ROV08SCF
12FBC12N-316	OR53.7X1.78X	A25P0150/000AAAAA0A0A0000	ROV08SCFX
12FBC8N-316	OR56.75X3.53VITX	A25P0150/000AAAAA0A0A0000	ROV08ZL71
12FBT12N-316	OR56.75X3.53X	A25P0200/000AAAAA000F0000	ROV08ZLCF
12FBT12N-B	OR6.07X1.78X	A25P0200/000AAAAA000F0000	ROV08ZS71
12FBT4N-316	OR6.1X1.6X	A25Q0050/000AAAAA000A0000	ROV08ZSCF
12FBT8N-316	OR6.5X1.5VITX	A25Q0050/000AAAAA000A0000	ROV10L71
12F-C12L-1/3-BN-SS	OR6.5X1.5X	A25Q0050/000AAAAA000F0000	ROV10L71X
12F-C12L-1/3-EPR-SS	OR69.44X3.53V80X	A25Q0050/000AAAAA000F0000	ROV10LCF
12F-C12L-1/3-SS	OR69.44X3.53X	A25Q0080/000AAABA000A0000	ROV10LCFX
12F-C12L-1/3-SS-C3	OR70V	A25Q0080/000AAABA000A0000	ROV10LDPR71CF
12F-C12L-100-B	OR8.1X1.6X	A25Q0125/000AAAAA000A0000	ROV10LLCFX
12F-C12L-100-SS	OR8.2X1.5VITX	A25Q0125/000AAAAA000A0000	ROV10S71
12F-C12L-10-B	OR8.5X1.5X	A25Q0130/000AAAAA0S0A0000	ROV10S71X
12F-C12L-10-BN-SS	OR8.92X1.83VITX	A25Q0130/000AAAAA0S0A0000	ROV10SCF
12F-C12L-10-SS	OR8.92X1.83X	A25Q0200/000AAAAA000A0000	ROV10SCFX
12F-C12L-10-SS-C3	OR80V	A25Q0200/000AAAAA000A0000	ROV10ZL71
12F-C12L-1-B	OR85.32X3.53V80X	A26Q0140/000AAAAA000A0000	ROV10ZLCF
12F-C12L-1-BN-SS	OR85.32X3.53X	A26Q0140/000AAAAA000A0000	ROV10ZS71
12F-C12L-1-BN-SS-C3	OR8X1.5VITX	A28-06-BK00	ROV10ZSCF
12F-C12L-1-EPR-SS	OR8X1.88X	A28-06-BK00	ROV12L71
12F-C12L-1-SS	OR8X2VITX	A2A060ZN	ROV12L71X
12F-C12L-1-SS-C3	OR9.25X1.78VITX	A2A125ZN	ROV12LCF
12F-C12L-25-B	OR9.3X1.5VITX	A2B060T260N	ROV12LCFX
12F-C12L-25-SS	OR9.3X1.5X	A2B060TN	ROV12LLCFX
12F-C12L-50-BN-SS-C3	OR9.3X2.2X	A2B060ZN	ROV12S71
12F-C12L-50-SS	OR9.4X2.1VITX	A2ES0005H2K	ROV12S71X
12F-C12L-5-B	OR95V	A2ES0005L2K	ROV12SCF
12F-C12L-5-BN-SS	OR98.02X3.53X	A2ES0010L2K	ROV12SCFX
12F-C12L-5-EPR-SS	O-RINGPICK	A2ES0015L2K	ROV12ZL71
12F-C12L-5-SS	OS21A-SNFLY	A2ES0029H2K	ROV12ZLCF
12F-C12L-75-BN-SS	OS22A-DNFLY	A2ES0029L2K	ROV12ZSCF

12F-C12L-75-SS	OS22A-SNFLY	A2ES0058H2K	ROV14S71
12FCS2SK	OSPE20-60002-00200-000000	A2M10	ROV14S71X
12FEL12N-316	OSPE20-60002-00200-000000	A2M4	ROV14SCF
12FEL12N-B	OSPE20-60002-00210-000000	A2M6	ROV14SCFX
12FEL8N-316	OSPE20-60002-00210-000000	A2M8	ROV14ZS71
12FEL8N-6MO	OSPE20-60002-00350-000000	A307-30J-G01	ROV14ZSCF
12FEL8N-B	OSPE20-60002-00350-000000	A31K0025/000AAAAA000A0000	ROV15L71
12FF12-316	OSPE20-60002-00450-100000	A31K0025/000AAAAA000A0000	ROV15L71X
12FF12-625	OSPE20-60002-00450-100000	A31K0040/000AAAAA000A0000	ROV15LCF
12FF12-6MO	OSPE20-60002-00480-000000	A31K0040/000AAAAA000A0000	ROV15LCFX
12FF12-B	OSPE20-60002-00480-000000	A31K0050/000AAAAA000A0000	ROV15ZL71
12F-F12L-10-SS	OSPE20-60002-00573-000000	A31K0050/000AAAAA000A0000	ROV15ZLCF
12F-F12L-1-EPR-SS	OSPE20-60002-00573-000000	A31K0080/000AAAAA000A0000	ROV16S71
12F-F12L-250-SS	OSPE20-60002-00600-000000	A31K0080/000AAAAA000A0000	ROV16S71X
12F-F12L-50-SS	OSPE20-60002-00600-000000	A31K0125/000AAAAA000A0000	ROV16SCF
12F-F12L-5-SS	OSPE20-60002-00675-000000	A31K0125/000AAAAA000A0000	ROV16SCFX
12FF12-M	OSPE20-60002-00675-000000	A31L0050/000AAAAA000A0000	ROV16ZS71
12FF12-T	OSPE20-60002-00750-000000	A31L0050/000AAAAA000A0000	ROV16ZSCF
12FMK4S	OSPE20-60002-00750-000000	A31M0050/000ABAAA000A0000	ROV18L71
12FMK4SS	OSPE20-60002-01000-000000	A31M0050/000ABAAA000A0000	ROV18L71X
12FMTXB	OSPE20-60002-01000-000000	A31M0080/000AAAAA000A0000	ROV18LCF
12FMTXS	OSPE20-60002-01100-000000	A31M0080/000AAAAA000A0000	ROV18LCFX
12FMTXSS	OSPE20-60002-01100-000000	A31N0025/000AAAAA000A0000	ROV18ZL71
12FNMK4S	OSPE20-60002-01200-000000	A31N0025/000AAAAA000A0000	ROV18ZLCF
12FNMK4SS	OSPE20-60002-01200-000000	A31N0080/000AAAAA000A0000	ROV20S71
12FNMLS	OSPE20-60002-01250-000000	A31N0080/000AAAAA000A0000	ROV20S71X
12FNMLSS	OSPE20-60002-01250-000000	A31N0260/000AAAAA000A0000	ROV20SCF
12FNMTXS	OSPE20-60002-01250-000A14	A31N0260/000AAAAA000A0000	ROV20SCFX
12FNMTXSS	OSPE20-60002-01250-000A14	A31P0100/000AAAAA000A0000	ROV20ZS71
12FRT12N-316	OSPE20-60002-01500-000000	A31P0100/000AAAAA000A0000	ROV20ZSCF
12FS5C2448ACHPH15	OSPE20-60002-01500-000000	A31P0350/000AAAAA000A0000	ROV22L71
12FS5C2448ACHPH15	OSPE20-60002-02350-000A70	A31P0350/000AAAAA000A0000	ROV22L71X
12FSC12N-316	OSPE20-60002-02350-000A70	A31Q0200/000AAAAA000A0000	ROV22LCF
12FSC12N-6MO	OSPE20-60004-00500-000000	A31Q0200/000AAAAA000A0000	ROV22LCFX
12FSC12R-316	OSPE20-60004-00500-000000	A31Q0320/000AAAAA000A0000	ROV22ZL71
12FSC16N-316	OSPE20-60004-03750-000000	A31Q0320/000AAAAA000A0000	ROV22ZLCF
12FSC8N-316	OSPE20-60004-03750-000000	A32M0180/000ABAAA000A0000	ROV25S71
12FSC8N-MMX	OSPE20-6000A-00250-000000	A32M0180/000ABAAA000A0000	ROV25S71X
12F-SWB12L-RT-V-SS	OSPE20-6000A-00250-000000	A32Q0820/000AAAAA000A0000	ROV25SCF
12F-SWB16L-RT-V-SS	OSPE20-6000A-00550-100000	A32Q0820/000AAAAA000A0000	ROV25SCFX
12F-U16LB-G-SS	OSPE20-6000A-00550-100000	A35K0025/000AAAAA000A0000	ROV25ZS71
12F-U16LR-G-SS	OSPE20-6000A-00620-000A7F	A35K0025/000AAAAA000A0000	ROV25ZSCF
12F-U16LR-G-SS-HT	OSPE20-6000A-00620-000A7F	A35K0100/000AAAAA000A0000	ROV28L71
12F-U16LR-T-SS	OSPE20-6000A-00900-000000	A35K0100/000AAAAA000A0000	ROV28L71X
12G3P4S	OSPE20-6000A-00900-000000	A35K0125/000AAAAA000A0000	ROV28LCF
12G4MK4S	OSPE20-6000A-00930-000000	A35K0125/000AAAAA000A0000	ROV28LCFX
12G4MXS	OSPE20-6000A-00930-000000	A35K0130/000ABAAA000A0000	ROV28ZL71
12G4MXSS	OSPE20-6000A-01050-PA7A00	A35K0130/000ABAAA000A0000	ROV28ZLCF
12G63P4S	OSPE20-6000A-01050-PA7A00	A35K0200/000AABAA000F0000	ROV30S71
12GMTXSS	OSPE20-6000A-01200-000A1F	A35K0200/000AABAA000F0000	ROV30S71X
12H6MK4S	OSPE20-6000A-01200-000A1F	A35K0250/000AAAAA000A0000	ROV30SCF
12H6MK4SS	OSPE20-6000A-01510-P00000	A35K0250/000AAAAA000A0000	ROV30SCFX
12HMK4S	OSPE20-6000A-01510-P00000	A35L0025/000AAAAA000A0000	ROV30ZSCF

12HMK4SS	OSPE20-6000A-02250-000000	A35L0025/000AAAAA000A0000	ROV35L71
12HMLOS	OSPE20-6000A-02250-000000	A35L0050/000AAAAA0S0F0075	ROV35LCF
12HMLOSS	OSPE20-6000A-04250-000000	A35L0050/000AAAAA0S0F0075	ROV35LCFX
12HMLOSV	OSPE20-6000A-04250-000000	A35L0075/000AAAAA000A0000	ROV35ZLCF
12HMP4SS	OSPE20-6000B-00100-000000	A35L0075/000AAAAA000A0000	ROV38S71
12HMTXB	OSPE20-6000B-00100-000000	A35L0100/000AAAAA000A0000	ROV38S71X
12HMTXS	OSPE20-6000B-00250-000000	A35L0100/000AAAAA000A0000	ROV38SCF
12HMTXSBP	OSPE20-6000B-00250-000000	A35L0100/000AAAAA0S0A0074	ROV38SCFX
12HMTXSS	OSPE20-6000B-00550-000000	A35L0100/000AAAAA0S0A0074	ROV38ZSCF
12HMX6SS	OSPE20-6000B-00550-000000	A35L0125/000AAAAA000A0000	ROV42L71
12HP46S	OSPE20-6000B-00930-000000	A35L0125/000AAAAA000A0000	ROV42L71X
12HP4S	OSPE20-6000B-00930-000000	A35L0125/000AAAAA0S0A0074	ROV42LCF
12J6MK4S	OSPE20-6000B-01200-000000	A35L0125/000AAAAA0S0A0074	ROV42LCFX
12JMK4S	OSPE20-6000B-01200-000000	A35L0150/000AAAAA0S0A0074	ROV42ZLCF
12JMLOSS	OSPE20-6000B-01750-000000	A35L0150/000AAAAA0S0A0074	RP01-05/04
12JMTXS	OSPE20-6000B-01750-000000	A35L0320/000AAAAA000A0000	RP01-05/06
12JMTXSS	OSPE20-6000B-01850-000000	A35L0320/000AAAAA000A0000	RP01-10/04
12K-12 RA-SS	OSPE20-6000B-01850-000000	A35L0400/000AAAAA000A0000	RP01-10/06
12KBAW21MVX	OSPE20-6000B-02170-000000	A35L0400/000AAAAA000A0000	RP01-10/08
12KBAW26MVX	OSPE20-6000B-02170-000000	A35L0400/000AAAAA000F0000	RP01-13/04
12KBTF19MVX	OSPE20-6000B-03130-000000	A35L0400/000AAAAA000F0000	RP01-13/06
12KBTR19MVX	OSPE20-6000B-03130-000000	A35M0025/000AAAAA000A0000	RP01-13/08
12KFAM24MVX	OSPE20-60102-01200-000000	A35M0025/000AAAAA000A0000	RP01-13/10
12KFAW21MVX	OSPE20-60102-01200-000000	A35M0030/030AAAAA000A0000	RP01-13/12
12KFTF19MVX	OSPE20-62204-01480-000A78	A35M0030/030AAAAA000A0000	RP01-17/08
12KFTH19MVX	OSPE20-62204-01480-000A78	A35M0050/000AAAAA000A0000	RP01-17/10
12KFTR19MVX	OSPE20-6220A-00480-000A7F	A35M0050/000AAAAA000A0000	RP01-17/12
12L5NMLS	OSPE20-6220A-00480-000A7F	A35M0050/065AAAAA000A0000	RP01-17/14
12L5NRMS	OSPE20-6220A-00680-P00000	A35M0050/065AAAAA000A0000	RP01-21/12
12LEMQ1SS	OSPE20-6220A-00680-P00000	A35M0080/000AAAAA000A0000	RP01-21/14
12LEMQ2CF	OSPE20-622A6-01480-0AHA78	A35M0080/000AAAAA000A0000	RP02-04
12LEMQ2SS	OSPE20-622A6-01480-0AHA78	A35M0100/000AAAAA000A0000	RP02-06
12LOEMQ1CF	OSPE20-70002-00475-000002	A35M0100/000AAAAA000A0000	RP02-08
12LOEMQ2CF	OSPE20-70002-00475-000002	A35M0100/000AAAAA0S0A0078	RP02-10
12M-0006	OSPE20-70002-00550-000000	A35M0100/000AAAAA0S0A0078	RP02-12
12M1-1080120101	OSPE20-70002-00550-000000	A35M0125/000AAAAA000A0000	RP02-14
12M1-1080520101	OSPE20-70002-01000-000000	A35M0125/000AAAAA000A0000	RP04-04
12M1-1080620101	OSPE20-70002-01000-000000	A35M0160/000AAAAA000A0000	RP04-06
12M1-1090120101	OSPE25-00000-00100-000000	A35M0160/000AAAAA000A0000	RP04-08
12M18F82EDMLOS	OSPE25-00000-00100-000000	A35M0200/000AAAAA000A0000	RP04-10
12M18F82EDMXS	OSPE25-00000-00200-000000	A35M0200/000AAAAA000A0000	RP04-12
12M18F87OMXS	OSPE25-00000-00200-000000	A35M0200/000AAAAA000F0000	RP04-14
12M18F8OMXS	OSPE25-00000-00270-060000	A35M0200/000AAAAA000F0000	RP06-04
12M1SC10-316	OSPE25-00000-00270-060000	A35M1050/000AAAAA000A0000	RP06-06
12M1SC12-316	OSPE25-00000-00300-000000	A35M1050/000AAAAA000A0000	RP06-08
12M1SC4-316	OSPE25-00000-00300-000000	A35M1200/000AAAAA000A0000	RP06-10
12M1SC8-316	OSPE25-00000-00300-060000	A35M1200/000AAAAA000A0000	RP06-12
12M2-1080520101	OSPE25-00000-00300-060000	A35N0025/000AAAAA000A0000	RP06-14
12M22C87MLS	OSPE25-00000-00350-000000	A35N0025/000AAAAA000A0000	RP14-10/04
12M22C87OMLOS	OSPE25-00000-00350-000000	A35N0040/000AAAAA000A0000	RP14-10/06
12M22C87OMLOSV	OSPE25-00000-00400-000000	A35N0040/000AAAAA000A0000	RP14-10/08
12M22C87OMXS	OSPE25-00000-00400-000000	A35N0050/000AAAAA000A0000	RP14-13/04
12M22C87OMXSBPNB	OSPE25-00000-00420-000000	A35N0050/000AAAAA000A0000	RP14-13/06

12M22C8OMLOS	OSPE25-00000-00420-000000	A35N0080/000AAAAA000A0000	RP14-13/08
12M22C8OMXS	OSPE25-00000-00435-060000	A35N0080/000AAAAA000A0000	RP14-17/12
12M22F682EDMXS	OSPE25-00000-00435-060000	A35N0100/000AAAAA000A0000	RP14-21/12
12M22F687OMLS	OSPE25-00000-00440-000000	A35N0100/000AAAAA000A0000	RP16-04
12M22F687OMXS	OSPE25-00000-00440-000000	A35N0125/000AAAAA000A0000	RP16-06
12M22F82EDMLOS	OSPE25-00000-00450-000000	A35N0125/000AAAAA000A0000	RP16-08
12M22F82EDMLOSS	OSPE25-00000-00450-000000	A35N0160/000AAAAA000A0000	RP16-10
12M22F82EDMXS	OSPE25-00000-00450-060000	A35N0160/000AAAAA000A0000	RP16-12
12M22F82EDMXSS	OSPE25-00000-00450-060000	A35N0160/000AAAAA0S0A0083	RP18-05/04
12M22F87OMLOS	OSPE25-00000-00455-000000	A35N0160/000AAAAA0S0A0083	RP18-10/04
12M22F87OMXS	OSPE25-00000-00455-000000	A35N0200/000AAAAA000A0000	RP18-10/06
12M22F87OMXSS	OSPE25-00000-00460-060000	A35N0200/000AAAAA000A0000	RP18-10/08
12M22F8OMXS	OSPE25-00000-00460-060000	A35N0200/000AAAAA0S0A0083	RP18-13/06
12M22S87OMXS	OSPE25-00000-00500-000000	A35N0200/000AAAAA0S0A0083	RP18-13/08
12M22V87OMXS	OSPE25-00000-00500-000000	A35N0200/125AAAAA000A0000	RP18-13/10
12M24F8OMXS	OSPE25-00000-00500-0E0000	A35N0200/125AAAAA000A0000	RP18-13/12
12M26F82EDMXS	OSPE25-00000-00500-0E0000	A35N0250/000AAAAA0B0A0000	RP18-17/08
12M26F82EDMXSS	OSPE25-00000-00520-000000	A35N0250/000AAAAA0B0A0000	RP18-17/10
12M26F87OMXS	OSPE25-00000-00520-000000	A35N0260/000AAAAA000A0000	RP18-17/12
12M26F8OMXS	OSPE25-00000-00550-000000	A35N0260/000AAAAA000A0000	RP20-04
12M27C87OMLOS	OSPE25-00000-00550-000000	A35N0270/055AAAAA0U0A0083	RP20-06
12M27C87OMXS	OSPE25-00000-00600-060000	A35N0270/055AAAAA0U0A0083	RP20-08
12M27C87OMXSBPNB	OSPE25-00000-00600-060000	A35N0280/055AAAAA0S0A0083	RP20-10
12M27C8OMLOS	OSPE25-00000-00610-000000	A35N0280/055AAAAA0S0A0083	RP20-12
12M27C8OMXS	OSPE25-00000-00610-000000	A35N0280/055AAAAA0S0A0140	RP20-14
12M27F682EDMLS	OSPE25-00000-00620-060000	A35N0280/055AAAAA0S0A0140	RP232
12M27F682EDMXS	OSPE25-00000-00620-060000	A35N0300/000AAAAA000A0000	RP26-04
12M27F687OMLS	OSPE25-00000-00700-000000	A35N0300/000AAAAA000A0000	RP26-06
12M27F687OMXS	OSPE25-00000-00700-000000	A35N0320/000AAAAA0T0A0083	RP26-08
12M27F687OMXSBPNB	OSPE25-00000-00720-000000	A35N0320/000AAAAA0T0A0083	RP26-10
12M27F68OMXS	OSPE25-00000-00720-000000	A35N0320/000AAAAA0U0A0083	RP26-12
12M27F82EDMLOS	OSPE25-00000-00720-060000	A35N0320/000AAAAA0U0A0083	RP26-14
12M27F82EDMLOSCAP	OSPE25-00000-00720-060000	A35N0400/000AAAAA0S0F0083	RP31-05/04
12M27F82EDMLOSS	OSPE25-00000-00810-B60000	A35N0400/000AAAAA0S0F0083	RP31-10/04
12M27F82EDMXS	OSPE25-00000-00810-B60000	A35N0450/000AAAAA000A0000	RP31-10/06
12M27F82EDMXSS	OSPE25-00000-00900-000000	A35N0450/000AAAAA000A0000	RP31-10/08
12M27F87OMLOS	OSPE25-00000-00900-000000	A35N0500/000AAAAA000A0000	RP31-13/04
12M27F87OMLOSCAP	OSPE25-00000-00910-B60000	A35N0500/000AAAAA000A0000	RP31-13/06
12M27F87OMXS	OSPE25-00000-00910-B60000	A35N0500/000AAAAA0T0A0083	RP31-13/08
12M27F87OMXSS	OSPE25-00000-00920-000118	A35N0500/000AAAAA0T0A0083	RP31-17/08
12M27F8OMXS	OSPE25-00000-00920-000118	A35N0600/000AAAAA000A0000	RP31-17/12
12M27R87OMLOS	OSPE25-00000-00920-060000	A35N0600/000AAAAA000A0000	RP31-21/12
12M27R87OMXS	OSPE25-00000-00920-060000	A35N0600/000AAAAA0S0F0083	RP31-21/14
12M27RHV82EDMX71	OSPE25-00000-01010-B00000	A35N0600/000AAAAA0S0F0083	RP39-04
12M27RHZ82EDMX71	OSPE25-00000-01010-B00000	A35N0600/000AAAAA0T0A0083	RP39-06
12M27S87OMLOS	OSPE25-00000-01010-B60000	A35N0600/000AAAAA0T0A0083	RP39-08
12M27S87OMXS	OSPE25-00000-01010-B60000	A35N0700/000AAAAA000A0000	RP39-10
12M27V87OMLOS	OSPE25-00000-01120-0E0000	A35N0700/000AAAAA000A0000	RP40-04/04
12M27V87OMXS	OSPE25-00000-01120-0E0000	A35P0050/000AAAAA000A0000	RP40-04/06
12M27V8OMLOS	OSPE25-00000-01200-000000	A35P0050/000AAAAA000A0000	RP40-06/06
12M27V8OMXS	OSPE25-00000-01200-000000	A35P0075/000AAAAA000A0000	RP40-08/08
12M2SC12-316	OSPE25-00000-01520-000000	A35P0075/000AAAAA000A0000	RP422
12M2SC12-6MO	OSPE25-00000-01520-000000	A35P0080/000AAAAA000A0000	RP485

12M33F87OMLOS	OSPE25-00000-01620-0E0000	A35P0080/000AAAAA000A0000	RP60-05
12M5BT12-316	OSPE25-00000-01620-0E0000	A35P0100/000AAAAA000A0000	RP600SH
12M5RT12-316	OSPE25-00000-01700-000004	A35P0100/000AAAAA000A0000	RP60-10
12M5SEL12-316	OSPE25-00000-01700-000004	A35P0100/000AAAAA000F0000	RP60-13
12MA12N-316	OSPE25-00000-02000-000000	A35P0100/000AAAAA000F0000	RP60-17
12MA12N-B	OSPE25-00000-02000-000000	A35P0100/050AAAAA0U0A0147	RP60-21
12MA12N-M	OSPE25-00000-02200-000000	A35P0100/050AAAAA0U0A0147	RP60-26
12MA12R-316	OSPE25-00000-02200-000000	A35P0100/085AAAAA0S0A0182	RP66-04/06
12MA12RED-316	OSPE25-00000-02610-B60000	A35P0100/085AAAAA0S0A0182	RP66-04/08
12MA16N-316	OSPE25-00000-02610-B60000	A35P0100/085AAAAA0U0A0182	RP66-04/10
12MA8K-316	OSPE25-00000-03000-000000	A35P0100/085AAAAA0U0A0182	RP66-06/08
12MA8N-316	OSPE25-00000-03000-000000	A35P0125/000AAAAA000A0000	RP66-06/10
12MA8N-6MO	OSPE25-0000A000470-000000	A35P0125/000AAAAA000A0000	RP66-08/10
12MA8N-HC	OSPE25-0000A000470-000000	A35P0125/040AAAAA0U0A0137	RP66-10/12
12MA8R-316	OSPE25-0000A200300-00010E	A35P0125/040AAAAA0U0A0137	RP66-12/14
12MBC12N-316	OSPE25-0000A200300-00010E	A35P0125/080AAAAA0U0A0177	RP71-00
12MBT12N-316	OSPE25-0000A200520-000506	A35P0125/080AAAAA0U0A0177	RP71-00S_01
12MBT12R-316	OSPE25-0000A200520-000506	A35P0125/110AAAAA0U0A0207	RP93-10/04
12MBT8N-316	OSPE25-0000A201395-000506	A35P0125/110AAAAA0U0A0207	RP93-10/06
12M-C12L-1/3-SS	OSPE25-0000A201395-000506	A35P0160/000AAAAA000A0000	RP93-10/08
12M-C12L-100-SS	OSPE25-00100-00250-060000	A35P0160/000AAAAA000A0000	RP93-13/06
12M-C12L-10-B	OSPE25-00100-00250-060000	A35P0180/020AAAAA0S0A0097	RP93-13/08
12M-C12L-10-SS	OSPE25-00100-00300-000000	A35P0180/020AAAAA0S0A0097	RP93-13/10
12M-C12L-1-B	OSPE25-00100-00300-000000	A35P0180/020AAAAA0U0A0117	RP93-13/12
12M-C12L-1-BN-SS	OSPE25-00100-00455-000000	A35P0180/020AAAAA0U0A0117	RP93-17/12
12M-C12L-1-SS	OSPE25-00100-00455-000000	A35P0200/000AAAAA000A0000	RP98-10/04
12M-C12L-5-B	OSPE25-00100-00460-000000	A35P0200/000AAAAA000A0000	RP98-10/06
12M-C12L-5-SS	OSPE25-00100-00460-000000	A35P0200/000AAAAA0S0A0097	RP98-10/08
12M-F12L-250-SS	OSPE25-00100-00460-B00000	A35P0200/000AAAAA0S0A0097	RP98-13/06
12MP7-MPBLPKH-V-SSP	OSPE25-00100-00460-B00000	A35P0210/000AAAAA000A0000	RP98-13/08
12MRT12N-316	OSPE25-00100-00485-000000	A35P0210/000AAAAA000A0000	RP98-13/10
12MRT8N-316	OSPE25-00100-00485-000000	A35P0250/000AAAAA000A0000	RP98-13/12
12MSC12BR-316	OSPE25-00100-00600-0E1000	A35P0250/000AAAAA000A0000	RP98-17/12
12MSC12K-316	OSPE25-00100-00600-0E1000	A35P0250/000AAAAA0W0A0200	RP98-17/14
12MSC12K-B	OSPE25-00100-00710-B60000	A35P0250/000AAAAA0W0A0200	RP98-21/14
12MSC12N-316	OSPE25-00100-00710-B60000	A35P0250/040AAAAA0T0A0137	RP99-05/04
12MSC12N-6MO	OSPE25-00100-00720-000000	A35P0250/040AAAAA0T0A0137	RP99-10/04
12MSC12N-825	OSPE25-00100-00720-000000	A35P0300/000AAAAA0T0F0097	RP99-10/06
12MSC12N-B	OSPE25-00100-01010-B60000	A35P0300/000AAAAA0T0F0097	RP99-10/08
12MSC12N-IIY	OSPE25-00100-01010-B60000	A35P0320/000AAAAA0U0A0097	RP99-13/04
12MSC12N-MMX	OSPE25-00100-01500-000000	A35P0320/000AAAAA0U0A0097	RP99-13/06
12MSC12N-NNR	OSPE25-00100-01500-000000	A35P0450/000AAAAA000F0000	RP99-13/08
12MSC12R-316	OSPE25-00100-02000-000000	A35P0450/000AAAAA000F0000	RP99-13/10
12MSC12R-6MO	OSPE25-00100-02000-000000	A35P0475/000AAAAA000A0000	RP99-13/12
12MSC12R-ED-316	OSPE25-0010A200495-000506	A35P0475/000AAAAA000A0000	RP99-17/08
12MSC12R-MMX	OSPE25-0010A200495-000506	A35P0500/000AAAAA000F0000	RP99-17/10
12MSC16K-316	OSPE25-00200-00455-000000	A35P0500/000AAAAA000F0000	RP99-17/12
12MSC16N-316	OSPE25-00200-00455-000000	A35P0500/000AAAAA0S0A0097	RP99-17/14
12MSC16N-6MO	OSPE25-00200-01070-0D0000	A35P0500/000AAAAA0S0A0097	RP99-21/14
12MSC16N-B	OSPE25-00200-01070-0D0000	A35P0500/000AAAAA0S0A0100	RPA-95-006
12MSC16N-IIY	OSPE25-02000-00720-000000	A35P0500/000AAAAA0S0A0100	RPA-95-006
12MSC16N-MMX	OSPE25-02000-00720-000000	A35P0500/000AAAAA0S0F0100	RPA-95-114
12MSC16R-316	OSPE25-02000-01870-000000	A35P0500/000AAAAA0S0F0100	RPA-95-114

12MSC4N-316	OSPE25-02000-01870-000000	A35P0600/000AAAAA0S0A0097	RPA-96-733
12MSC6N-316	OSPE25-10300-00100-000000	A35P0600/000AAAAA0S0A0097	RPA-96-733
12MSC6R-316	OSPE25-10300-00100-000000	A35P0600/000AAAAA0T0F0097	RPA-96-734
12MSC8BR-316	OSPE25-10300-00150-0E0068	A35P0600/000AAAAA0T0F0097	RPA-96-734
12MSC8N-316	OSPE25-10300-00150-0E0068	A35P0600/000AAAAA0T0F0100	RPA-96-735
12MSC8N-6MO	OSPE25-10300-00270-000008	A35P0600/000AAAAA0T0F0100	RPA-96-735
12MSC8N-B	OSPE25-10300-00270-000008	A35P0675/000AAAAA000A0000	RPDM2AT10XV
12MSC8N-IIY	OSPE25-10300-00285-000000	A35P0675/000AAAAA000A0000	RPDM2AT17KV
12MSC8N-MMX	OSPE25-10300-00285-000000	A35P0910/000AAAAA000A0000	RPDM2AT17XV
12MSC8N-NNR	OSPE25-10300-00300-000000	A35P0910/000AAAAA000A0000	RPDM2AT25XV
12MSC8R-316	OSPE25-10300-00300-000000	A35Q0050/000AAAAA000A0000	RPDM2AT35JV
12MSEL12K-316	OSPE25-10300-00300-060000	A35Q0050/000AAAAA000A0000	RPDM2AT35XV
12MSEL12N-316	OSPE25-10300-00300-060000	A35Q0100/000AAAAA000A0000	RPDM2PT10XV
12MSEL12N-6MO	OSPE25-10300-00330-000000	A35Q0100/000AAAAA000A0000	RPDM2PT17XV
12MSEL12N-B	OSPE25-10300-00330-000000	A35Q0100/000AAABA000A0000	RPDM2PT25KV
12MSEL12N-IIY	OSPE25-10300-00400-000000	A35Q0100/000AAABA000A0000	RPDM2PT25XV
12MSEL12N-MMX	OSPE25-10300-00400-000000	A35Q0100/080AAAAB000F0000	RPDM2PT35XV
12MSEL12R-316	OSPE25-10300-00400-060000	A35Q0100/080AAAAB000F0000	RPEA5
12MSEL8N-316	OSPE25-10300-00400-060000	A35Q0130/000AAAAA000A0000	RPECOWNFAW/S
12MSEL8N-6MO	OSPE25-10300-00420-060000	A35Q0130/000AAAAA000A0000	RPGC-LCN
12MSEL8N-B	OSPE25-10300-00420-060000	A35Q0150/000ABAAA000A0000	RPM232/635
12MTC12N-316	OSPE25-10300-00450-060000	A35Q0150/000ABAAA000A0000	RPM232/638
12MTC16N-316	OSPE25-10300-00450-060000	A35Q0160/000AAAAA000A0000	RPM2C8/637F-8
12MVEL12N-316	OSPE25-10300-00450-0D0000	A35Q0160/000AAAAA000A0000	RPM2C8/638
12MVEL8N-316	OSPE25-10300-00450-0D0000	A35Q0200/000AAAAA000A0000	RPM2CA/637F-8
12NU12-316	OSPE25-10300-00500-060000	A35Q0200/000AAAAA000A0000	RPM2CA/638
12NU12-625	OSPE25-10300-00500-060000	A35Q0200/000AAABA000A0000	RPM485/635
12NU12-6MO	OSPE25-10300-00510-060000	A35Q0200/000AAABA000A0000	RPMCAN/635
12NU12-B	OSPE25-10300-00510-060000	A35Q0200/000ACAAA000A0000	RPMCAN/637
12PAT12	OSPE25-10300-00550-060000	A35Q0200/000ACAAA000A0000	RPMCAN/638
12PC12-316	OSPE25-10300-00550-060000	A35Q0250/000AAAAA000A0000	RPMEA5/638
12PC12-6MO	OSPE25-10300-00600-B60000	A35Q0250/000AAAAA000A0000	RPMEAE/637-8
12PC16-316	OSPE25-10300-00600-B60000	A35Q0250/000AAAAA0B0A0000	RPMEAE/638
12PFMQ1CF	OSPE25-10300-00610-060000	A35Q0250/000AAAAA0B0A0000	RPMPC8/638
12PFMQ2CF	OSPE25-10300-00610-060000	A35Q0250/000AAAAA0U0A0290	RPMPCA/638
12PMQ1CF	OSPE25-10300-00620-000000	A35Q0250/000AAAAA0U0A0290	RPMPDN/638
12PMQ2CF	OSPE25-10300-00620-000000	A35Q0300/000AAAAA000A0000	RPMPDP/635
12PNMK4S	OSPE25-10300-00800-060000	A35Q0300/000AAAAA000A0000	RPMPDP/637
12PNMK4SS	OSPE25-10300-00800-060000	A35Q0300/000AAAAA0S0A0104	RPPDP
12PNMKAS	OSPE25-10300-00900-B60000	A35Q0300/000AAAAA0S0A0104	RPSBT
12PNMLOSS	OSPE25-10300-00900-B60000	A35Q0300/000AAAAA0T0A0104	RR01 L8 00
12PNMTXS	OSPE25-10300-01100-000000	A35Q0300/000AAAAA0T0A0104	RR63 L8 12
12PNMTXSS	OSPE25-10300-01100-000000	A35Q0300/050AAAAA000A0000	RR63 L8 16
12PS10BTV1R2B	OSPE25-10300-01100-000008	A35Q0300/050AAAAA000A0000	RR82 L1 08 02
12PS10CTE2R2B	OSPE25-10300-01100-000008	A35Q0320/000AAAAA000A0000	RRM12X1.5SS
12PS10CTV2S4B	OSPE25-10300-01100-060000	A35Q0320/000AAAAA000A0000	RRM14X1.5SS
12PS10CTV2SX4B	OSPE25-10300-01100-060000	A35Q0350/000AAAAA0T0A0454	RRM16X1.5SS
12PSR-102020321	OSPE25-10304-00950-000000	A35Q0350/000AAAAA0T0A0454	RRM18X1.5SS
12PSR-102040121	OSPE25-10304-00950-000000	A35Q0500/000AAAAA000A0000	RRM27X2SS
12PSS-101010241	OSPE25-1030A200450-P00118	A35Q0500/000AAAAA000A0000	RRM42X2SS
12PSS-102030241	OSPE25-1030A200450-P00118	A35Q0500/000AAAAA0S0A0104	RRP-16-020-000
12R-12 RA-SS	OSPE25-20400-00050-000000	A35Q0500/000AAAAA0S0A0104	RRP-16-020-000
12R4OMLOS	OSPE25-20400-00050-000000	A35Q0580/000AAAAA000A0000	RRP-16-024-000

12R4OMXS	OSPE25-20400-00100-000000	A35Q0580/000AAAAA000A0000	RRP-16-024-000
12R4OMXSS	OSPE25-20400-00100-000000	A35Q0850/000AAAAA000A0000	RRP-16-060-000
12R5OMLOS	OSPE25-20400-00170-060000	A35Q0850/000AAAAA000A0000	RRP-16-060-000
12R6MK4S	OSPE25-20400-00170-060000	A35Q1000/000AAAAA000A0000	RRP-16-118-000
12R6MK4SS	OSPE25-20400-00170-A60000	A35Q1000/000AAAAA000A0000	RRP-16-118-000
12R6MLOS	OSPE25-20400-00170-A60000	A35Q1280/000AAAAA000A0000	RRP-16-340-000
12R6MLOSS	OSPE25-20400-00300-000000	A35Q1280/000AAAAA000A0000	RRP-16-340-000
12R6MXS	OSPE25-20400-00300-000000	A36LB2126DC2A23	RRP-16-341-000
12R6MXSBP	OSPE25-20400-00300-0E0000	A36LB2126DC2A23	RRP-16-341-000
12RHDMLOSCF	OSPE25-20400-00300-0E0000	A36LB2176DC2A23	RRP-79-502-000
12RHDMTXS0.2BCF	OSPE25-20400-00350-000000	A36LB2176DC2A23	RRP-79-502-000
12RHDMTXS0.5BCF	OSPE25-20400-00350-000000	A3A125ZNMK2	RRP-95-023
12RHDMTXSCF	OSPE25-20400-00400-000000	A3A300T200-320NMK2	RRP-95-023
12RHV42EDMLOSCF	OSPE25-20400-00400-000000	A3A300Z270NMK2	RRP-95-024
12RHV42EDMXSCF	OSPE25-20400-00500-000000	A3C125ZNMK2	RRP-95-024
12RHV5OMLOSCF	OSPE25-20400-00500-000000	A3C300ZNMK2	RRP-95-104
12RHV5OMXSCF	OSPE25-20400-00520-000000	A3E060ZNMK2	RRP-95-104
12RHZ42EDMLOS0.2BCF	OSPE25-20400-00520-000000	A3E125ZNMK2	RRP-95-105
12RHZ42EDMLOSCF	OSPE25-20400-00520-060000	A3ES0058L2K	RRP-95-105
12RHZ42EDMXS0.5BCF	OSPE25-20400-00520-060000	A3ES0090L108H	RRP-95-122
12RHZ42EDMXSCF	OSPE25-20400-00540-000100	A3ES0116H2H	RRP-95-122
12RHZ5OMXSCF	OSPE25-20400-00540-000100	A3ES0116H2K	RRP-95-129
12RU10-316	OSPE25-20400-01000-000000	A3F060ZNMK2	RRP-95-129
12RU4-316	OSPE25-20400-01000-000000	A3LB2127AB6A46	RRP-95-130
12RU4-6MO	OSPE25-20400-01100-000000	A3LB2127AB6A46	RRP-95-130
12RU6-316	OSPE25-20400-01100-000000	A406-25H-G01	RRP-95-131
12RU6-B	OSPE25-20403-00050-100000	A40892	RRP-95-131
12RU8-316	OSPE25-20403-00050-100000	A45L0150/000AAAAA000A0000	RRP-95-151
12RU8-6MO	OSPE25-20403-00140-100000	A45L0150/000AAAAA000A0000	RRP-95-151
12RU8-IIY	OSPE25-20403-00140-100000	A46N0250/000ADAAA000A0000	RRP-95-152
12RU8-M	OSPE25-20403-00290-100000	A46N0250/000ADAAA000A0000	RRP-95-152
12S3MXS	OSPE25-20403-00290-100000	A4A300T300-320NFMK2	RRP-95-153
12S4OMLOS	OSPE25-30300-00110-000000	A4B125ZNFMK2	RRP-95-153
12S4OMLOSV	OSPE25-30300-00110-000000	A4B125ZNMK2	RRP-95-159
12S4OMXS	OSPE25-30300-00200-000000	A4B125ZVMK2	RRP-95-159
12S6MK4S	OSPE25-30300-00200-000000	A4ES0058H2K	RRP-95-161
12S6MLOS	OSPE25-30300-00250-000000	A4ES0116L2H	RRP-95-161
12S6MXS	OSPE25-30300-00250-000000	A4ES0116L2K	RRP-95-162
12SBAM24MVX	OSPE25-30300-00280-000000	A4ES0231H2K	RRP-95-162
12SBAW26MVN	OSPE25-30300-00280-000000	A4ES0231L2K	RRP-95-192
12SC12-1.0MMOR-316	OSPE25-30300-00460-000000	A4ES0347H2K	RRP-95-192
12SC12-316	OSPE25-30300-00460-000000	A4ES0347L2K	RRP-95-218
12SC12-6MO	OSPE25-30303-00070-100000	A4ES0578L2K	RRP-95-218
12SC12-B	OSPE25-30303-00070-100000	A4EU4-MG	RRP-95-219
12SC12-IIY	OSPE25-40500-00050-000000	A4-GAUGE	RRP-95-219
12SC12-MMX	OSPE25-40500-00050-000000	A4MC2	RRP-95-220
12SFAM24MXX	OSPE25-40500-00100-000000	A4MC4	RRP-95-220
12SFAR21MXN	OSPE25-40500-00100-000000	A4MC4-MG	RRP-95-222
12SFAR24MXX	OSPE25-40500-00150-000000	A4TU4-MG	RRP-95-222
12SFAW21MXN	OSPE25-40500-00150-000000	A4UC4	RRP-95-224
12SFAW26MXN	OSPE25-40500-00200-000000	A50-PS	RRP-95-224
12SFTF13MXX	OSPE25-40500-00200-000000	A50-PS	RRP-95-226
12SFTF19MXX	OSPE25-40500-00400-000000	A51K0025/000AAAA0000A0000	RRP-95-226

12TT4LS	OSPE25-40500-00400-000000	A51K0025/000AAAA0000A0000	RRP-95-233
12TT4MLSS	OSPE25-40500-00500-000000	A51K0050/000AAAA0000A0000	RRP-95-233
12TT4MXSS	OSPE25-40500-00500-000000	A51K0050/000AAAA0000A0000	RRP-95-298
12TT4XS	OSPE25-50002-00600-000000	A51K0075/000AAAA0000A0000	RRP-95-298
12TT8LS	OSPE25-50002-00600-000000	A51K0075/000AAAA0000A0000	RRP-95-451
12TTP4LS	OSPE25-50002-00600-B00000	A51K0080/000AAAA0000A0000	RRP-95-451
12TTP4XS	OSPE25-50002-00600-B00000	A51K0080/000AAAA0000A0000	RRP-95-585
12TUCM12-316	OSPE25-50002-00800-B00000	A51K0125/000AAAA0000A0000	RRP-95-585
12TUCM12-825	OSPE25-50002-00800-B00000	A51K0125/000AAAA0000A0000	RRP-95-590
12TUCM12-IIY	OSPE25-50002-01000-000000	A51K0200/000AAAA0000A0000	RRP-95-590
12TUCM12-TTZ	OSPE25-50002-01000-000000	A51K0200/000AAAA0000A0000	RRP-95-591
12TUCM18-316	OSPE25-50002-01000-B00000	A51K0250/000AAAA0000A0000	RRP-95-591
12TUCM20-316	OSPE25-50002-01000-B00000	A51K0250/000AAAA0000A0000	RRP-95-766
12TUR10-316	OSPE25-50002-01100-000000	A51L0100/000AAAA0000A0000	RRP-95-766
12TUR12-316	OSPE25-50002-01100-000000	A51L0100/000AAAA0000A0000	RRP-95-905
12TUR4-316	OSPE25-50002-01200-B00000	A51L0100/000ABAA0000A0000	RRP-95-905
12TUR6-316	OSPE25-50002-01200-B00000	A51L0100/000ABAA0000A0000	RRP-95-911
12TUR8-316	OSPE25-50002-01400-B00000	A51L0200/000AAAA0000A0000	RRP-95-911
12TUR8-6MO	OSPE25-50002-01400-B00000	A51L0200/000AAAA0000A0000	RRP-95-913
12TUR8-825	OSPE25-50002-02100-000000	A51L0500/000AAAA0000A0000	RRP-95-913
12TUR8-IIY	OSPE25-50002-02100-000000	A51L0500/000AAAA0000A0000	RRP-95-914
12TUR8-M	OSPE25-50003-02000-B00000	A51M0050/000AAAA0000A0000	RRP-95-914
12V3MXS	OSPE25-50003-02000-B00000	A51M0050/000AAAA0000A0000	RRP-95-915
12V3P4S	OSPE25-50004-00300-000000	A51M0100/000AAAA0000A0000	RRP-95-915
12V3T4S	OSPE25-50004-00300-000000	A51M0100/000AAAA0000A0000	RRP-95-916
12V4OMLOS	OSPE25-50004-00800-B00000	A51M0160/000AAAA0000A0000	RRP-95-916
12V4OMXS	OSPE25-50004-00800-B00000	A51M0160/000AAAA0000A0000	RRP-95-950
12V4OMXSBP	OSPE25-50004-01000-B00000	A51M0400/000AAAA0000A0000	RRP-95-950
12V5OMLOS	OSPE25-50004-01000-B00000	A51M0400/000AAAA0000A0000	RRP-95-951
12V6MLOS	OSPE25-50004-01200-B00000	A51M0500/000AAAA0000A0000	RRP-95-951
12V6MXS	OSPE25-50004-01200-B00000	A51M0500/000AAAA0000A0000	RRP-95-952
12VNXX50MXX	OSPE25-50008-01200-004000	A51N0125/000AAAA0000A0000	RRP-95-952
12WEMTXWLNMS	OSPE25-50008-01200-004000	A51N0125/000AAAA0000A0000	RRP-95-954
12WLNMLS	OSPE25-50009-02550-B0A000	A51N0280/000AAAA0000A0000	RRP-95-954
12WLNMLSS	OSPE25-50009-02550-B0A000	A51N0280/000AAAA0000A0000	RRP-95-962
12WLNMS	OSPE25-5002X-03250-0B5000	A51N0300/000ABAA0000A0000	RRP-95-962
12WMK4WL4NMS	OSPE25-5002X-03250-0B5000	A51N0300/000ABAA0000A0000	RRP-95-964
12WMK4WL4NMSS	OSPE25-5006X-00600-BB0000	A51P0100/000AAAA0000A0000	RRP-95-964
12WMLOS	OSPE25-5006X-00600-BB0000	A51P0100/000AAAA0000A0000	RRP-95-967
12WMLOWLNMLS	OSPE25-5006X-01000-BB0000	A51P0250/000AAAA0000F0000	RRP-95-967
12WMLOWLNMLSS	OSPE25-5006X-01000-BB0000	A51P0250/000AAAA0000F0000	RRP-96-049
12WMTXWLNMB	OSPE25-5006X-01365-0A3000	A51P0320/000AAAA0000A0000	RRP-96-049
12WMTXWLNMS	OSPE25-5006X-01365-0A3000	A51P0320/000AAAA0000A0000	RRP-96-086
12WMTXWLNMSS	OSPE25-50103-02000-B00000	A51Q0160/000AAAA0000A0000	RRP-96-086
12W-U16LB-G-SS	OSPE25-50103-02000-B00000	A51Q0160/000AAAA0000A0000	RRP-96-149
12W-U16LB-T-SS	OSPE25-50104-00800-B00000	A51Q0800/000AAAA0000A0000	RRP-96-149
12W-U16LR-G-SS	OSPE25-50104-00800-B00000	A51Q0800/000AAAA0000A0000	RRP-96-163
12X12G5-CBG8L-120-PF-SS	OSPE25-50104-01200-B00000	A52K0025/000AAAA0000A0000	RRP-96-163
12X6TU12-316	OSPE25-50104-01200-B00000	A52K0025/000AAAA0000A0000	RRP-96-165
12XABC12-316	OSPE25-51002-01700-B00000	A52K0200/000AAAA0000A0000	RRP-96-165
12XASC12-316	OSPE25-51002-01700-B00000	A52K0200/000AAAA0000A0000	RRP-96-166
12XASC12-6MO	OSPE25-51005-01410-B00000	A52M0080/000AAAA0000A0000	RRP-96-166
12XEMQ1SS	OSPE25-51005-01410-B00000	A52M0080/000AAAA0000A0000	RRP-96-186

12XEMQ2CF	OSPE25-51006-00560-000000	A52N0050/000AAAA0000A0000	RRP-96-186
12XEMQ2SS	OSPE25-51006-00560-000000	A52N0050/000AAAA0000A0000	RRP-96-213
1300 A	OSPE25-51105-01410-B00000	A52N0080/000AAAA0000A0000	RRP-96-213
1300 A	OSPE25-51105-01410-B00000	A52N0080/000AAAA0000A0000	RRP-96-215
1300 AV	OSPE25-52202-01340-000000	A55K0015/000AAAA0000A0000	RRP-96-215
1300 B	OSPE25-52202-01340-000000	A55K0015/000AAAA0000A0000	RRP-96-216
1300 B	OSPE25-52203-01210-B00000	A55K0025/000AAAA0000A0000	RRP-96-216
1300 BV	OSPE25-52203-01210-B00000	A55K0025/000AAAA0000A0000	RRP-96-238
1300 E	OSPE25-52204-01600-B00000	A55K0025/000AAAA0000F0000	RRP-96-238
1300 E	OSPE25-52204-01600-B00000	A55K0025/000AAAA0000F0000	RRP-96-294
1300 EA	OSPE25-52303-01210-B00000	A55K0030/000AAAA0000A0000	RRP-96-294
1300 EB	OSPE25-52303-01210-B00000	A55K0030/000AAAA0000A0000	RRP-96-302
1300 EC	OSPE25-60002-00200-000000	A55K0040/000AAAA0000A0000	RRP-96-302
1300 ED	OSPE25-60002-00200-000000	A55K0040/000AAAA0000A0000	RRP-96-304
1300 EK06	OSPE25-60002-00500-000000	A55K0042/000CAAA0000A0000	RRP-96-304
1300 EK06	OSPE25-60002-00500-000000	A55K0042/000CAAA0000A0000	RRP-96-332
1300 EK08	OSPE25-60002-00500-000A03	A55K0050/000AAAA0000A0000	RRP-96-332
1300 EK10	OSPE25-60002-00500-000A03	A55K0050/000AAAA0000A0000	RRP-96-445
1300 EK10	OSPE25-60002-00760-0A7070	A55K0050/000AAAA0000F0000	RRP-96-445
1300 EK12	OSPE25-60002-00760-0A7070	A55K0050/000AAAA0000F0000	RRP-96-446
1300 N	OSPE25-60002-00860-000000	A55K0050/000AAAA00T0A0100	RRP-96-446
1300 N	OSPE25-60002-00860-000000	A55K0050/000AAAA00T0A0100	RRP-96-447
1300 NA	OSPE25-60002-01100-000000	A55K0060/000AAAA0000A0000	RRP-96-447
1300 NB	OSPE25-60002-01100-000000	A55K0060/000AAAA0000A0000	RRP-96-656
1300 NV	OSPE25-60002-01300-000000	A55K0070/000AAAA0000A0000	RRP-96-656
1300 NV	OSPE25-60002-01300-000000	A55K0070/000AAAA0000A0000	RRP-96-657
1300 RV	OSPE25-60002-01370-000000	A55K0080/000AAAA0000A0000	RRP-96-657
1300 RVUV	OSPE25-60002-01370-000000	A55K0080/000AAAA0000A0000	RRP-96-658
1300 UV	OSPE25-60002-01560-000000	A55K0100/000AAAA0000A0000	RRP-96-658
1300 UV	OSPE25-60002-01560-000000	A55K0100/000AAAA0000A0000	RRP-96-659
1300 V	OSPE25-60002-01750-000000	A55K0100/000CAAA0000A0000	RRP-96-659
1300 V	OSPE25-60002-01750-000000	A55K0100/000CAAA0000A0000	RRP-96-660
130-003005	OSPE25-60002-01900-000000	A55K0120/000AAAA0000A0000	RRP-96-660
13001FIL	OSPE25-60002-01900-000000	A55K0120/000AAAA0000A0000	RRP-96-661
13001FIL	OSPE25-60002-02000-000000	A55K0125/000AAAA0000A0000	RRP-96-661
13008-QC	OSPE25-60002-02000-000000	A55K0125/000AAAA0000A0000	RRP-96-662
13008-QC	OSPE25-60002-02100-000000	A55K0125/006AAAA0000A0000	RRP-96-662
1300-QC	OSPE25-60002-02100-000000	A55K0125/006AAAA0000A0000	RRP-96-665
1300-QC	OSPE25-60002-03360-0C1A14	A55K0160/000AAAA0000A0000	RRP-96-665
130-106551	OSPE25-60002-03360-0C1A14	A55K0160/000AAAA0000A0000	RRP-96-671
13010-QC	OSPE25-60002-06000-000000	A55K0160/000AAAA0000F0000	RRP-96-671
13010-QC	OSPE25-60002-06000-000000	A55K0160/000AAAA0000F0000	RRP-96-672
13012-QC	OSPE25-60004-01036-000000	A55K0178/000AAAA0000A0000	RRP-96-672
130-213008	OSPE25-60004-01036-000000	A55K0178/000AAAA0000A0000	RRP-96-673
130-213010	OSPE25-60004-01800-000000	A55K0200/000AAAA0000A0000	RRP-96-673
130-213051	OSPE25-60004-01800-000000	A55K0200/000AAAA0000A0000	RRP-96-675
130-213079	OSPE25-60006-00245-000A08	A55K0200/000AAAA0000F0000	RRP-96-675
130-213304	OSPE25-60006-00245-000A08	A55K0200/000AAAA0000F0000	RRP-96-676
130-302294	OSPE25-60006-00500-000000	A55K0200/000CAAA0000A0000	RRP-96-676
130-302299	OSPE25-60006-00500-000000	A55K0200/000CAAA0000A0000	RRP-96-682
130-302318	OSPE25-60006-01564-000000	A55K0210/000AAAA0000A0000	RRP-96-682
130-302322	OSPE25-60006-01564-000000	A55K0210/000AAAA0000A0000	RRP-96-683
130-302327	OSPE25-60006-02200-000000	A55K0250/000AAAA0000A0000	RRP-96-683

130-302373	OSPE25-60006-02200-000000	A55K0250/000AAAA0000A0000	RRP-96-684
130-302375	OSPE25-60006-02765-000000	A55K0250/000AAAA0000F0000	RRP-96-684
130-302405	OSPE25-60006-02765-000000	A55K0250/000AAAA0000F0000	RRP-96-728
130-302407	OSPE25-60006-03200-000000	A55K0260/000AAAA0000A0000	RRP-96-728
130-302680	OSPE25-60006-03200-000000	A55K0260/000AAAA0000A0000	RRP-96-760
130-302745	OSPE25-60007-00200-000000	A55K0320/000AAAA0000A0000	RRP-96-760
130-302750	OSPE25-60007-00200-000000	A55K0320/000AAAA0000A0000	RRP-96-805
130-302800	OSPE25-60007-03624-000000	A55K0320/000BAAA0000A0000	RRP-96-805
130-302843	OSPE25-60007-03624-000000	A55K0320/000BAAA0000A0000	RRP-96-806
130-310000	OSPE25-60008-01200-004000	A55K0320/000CAAA0000A0000	RRP-96-806
130-310100	OSPE25-60008-01200-004000	A55K0320/000CAAA0000A0000	RRP-96-807
13039FIL	OSPE25-60008-01200-00D000	A55K0350/000AAAA0000A0000	RRP-96-807
13039FIL	OSPE25-60008-01200-00D000	A55K0350/000AAAA0000A0000	RRP-96-808
13042FIL	OSPE25-60008-01300-004000	A55K0350/000CAAA0000A0000	RRP-96-808
13042FIL	OSPE25-60008-01300-004000	A55K0350/000CAAA0000A0000	RRP-96-820
13043FIL	OSPE25-60008-01450-004000	A55K0400/000AAAA0000A0000	RRP-96-820
13043FIL	OSPE25-60008-01450-004000	A55K0400/000AAAA0000A0000	RRP-96-821
13045FIL	OSPE25-60008-01600-004000	A55K0420/000CAAA0000A0000	RRP-96-821
13045FIL	OSPE25-60008-01600-004000	A55K0420/000CAAA0000A0000	RRP-96-822
13045SFIL	OSPE25-60008-01700-00D000	A55K0430/000CAAA0000A0000	RRP-96-822
13045SFIL	OSPE25-60008-01700-00D000	A55K0430/000CAAA0000A0000	RRP-96-823
13046-01282	OSPE25-60008-02200-004000	A55K0450/000AAAA0000A0000	RRP-96-823
13046-01282	OSPE25-60008-02200-004000	A55K0450/000AAAA0000A0000	RRP-96-824
13046T-01270	OSPE25-60009-03800-001000	A55K0450/000CAAA0000A0000	RRP-96-824
13046T-01270	OSPE25-60009-03800-001000	A55K0450/000CAAA0000A0000	RRP-96-825
13047FIL	OSPE25-60009-04700-001000	A55K0500/000AAAA0000A0000	RRP-96-825
13047FIL	OSPE25-60009-04700-001000	A55K0500/000AAAA0000A0000	RRP-96-934
13048FIL	OSPE25-6000A-00610-000A00	A55K0600/000AAAA0000F0000	RRP-96-934
13048FIL	OSPE25-6000A-00610-000A00	A55K0600/000AAAA0000F0000	RRP-96-935
130-501011	OSPE25-6000B-01200-000000	A55K0850/000AAAA0000A0000	RRP-96-935
13072FIL	OSPE25-6000B-01200-000000	A55K0850/000AAAA0000A0000	RRP-96-950
13072FIL	OSPE25-6000B-02170-000000	A55L0025/000AAAA0000A0000	RRP-96-950
13081FIL	OSPE25-6000B-02170-000000	A55L0025/000AAAA0000A0000	RRP-96-951
13081FIL	OSPE25-60102-01900-000000	A55L0030/000AAAA0000A0000	RRP-96-951
13082FIL	OSPE25-60102-01900-000000	A55L0030/000AAAA0000A0000	RRP-96-952
13082FIL	OSPE25-60104-01800-000000	A55L0040/000AAAA0000A0000	RRP-96-952
130-902027	OSPE25-60104-01800-000000	A55L0040/000AAAA0000A0000	RRP-96-954
130-902148	OSPE25-60107-03624-000000	A55L0050/000AAAA0000A0000	RRP-96-954
130-902158	OSPE25-60107-03624-000000	A55L0050/000AAAA0000A0000	RRP-96-986
130-902180	OSPE25-6010B-01200-000000	A55L0050/000AAAA0000F0000	RRP-96-986
130-902223	OSPE25-6010B-01200-000000	A55L0050/000AAAA0000F0000	RRP-96-987
130-902224	OSPE25-62202-02300-000000	A55L0080/000AAAA0000A0000	RRP-96-987
130-902708	OSPE25-62202-02300-000000	A55L0080/000AAAA0000A0000	RRP-96-993
130D205QEBM3KR4821	OSPE25-62202-02995-000000	A55L0095/000AAAA0000A0000	RRP-96-993
130D220QEBT1KR4821	OSPE25-62202-02995-000000	A55L0095/000AAAA0000A0000	RRP-96-997
130D305QEBM3KR4821	OSPE25-62304-00565-000000	A55L0095/000AAAA0000F0000	RRP-96-997
130G02C	OSPE25-62304-00565-000000	A55L0095/000AAAA0000F0000	RRS1.1/2CF
130G02C	OSPE25-7000A-00300-000000	A55L0100/000AAAA0000A0000	RRS1.1/4CF
130M105QVM3KG241	OSPE25-7000A-00300-000000	A55L0100/000AAAA0000A0000	RRS1/2CF
130M202QEBM3KR401	OSPE25-80000-00570-000000	A55L0100/000ABAA0000A0000	RRS1/4CF
130M205QBM3KG241	OSPE25-80000-00570-000000	A55L0100/000ABAA0000A0000	RRS1/8CF
130M205QBM3KG321	OSPE25-80000-00780-000000	A55L0120/000AAAA0000A0000	RRS1CF
130M205QBM3KR401	OSPE25-80000-00780-000000	A55L0120/000AAAA0000A0000	RRS3/4CF

130M205QEBM3KG241	OSPE25-80000-01360-000000	A55L0125/000AAAA0000A0000	RRS3/8CF
130M205QEBM3KR321	OSPE25-80000-01360-000000	A55L0125/000AAAA0000A0000	RRSM10CF
130M205QEBM3KR401	OSPE32-00000-00100-000000	A55L0150/000AAAA0000A0000	RRSM12CF
130M205QEBT1KG241	OSPE32-00000-00100-000000	A55L0150/000AAAA0000A0000	RRSM14CF
130M205QVM3KG241	OSPE32-00000-00350-000000	A55L0160/000AAAA0000A0000	RRSM16CF
130M210QBM3KG321	OSPE32-00000-00350-000000	A55L0160/000AAAA0000A0000	RRSM18CF
130M210QBM3KR401	OSPE32-00000-00370-000000	A55L0200/000AAAA0000A0000	RRSM22CF
130M210QEBF1KG241	OSPE32-00000-00370-000000	A55L0200/000AAAA0000A0000	RRSM27CF
130M210QEBM3KG241	OSPE32-00000-00370-0D0000	A55L0210/000AAAA0000A0000	RRSM33CF
130M210QEBM3KR321	OSPE32-00000-00370-0D0000	A55L0210/000AAAA0000A0000	RRSM42CF
130M210QEBM3KR401	OSPE32-00000-00400-000000	A55L0250/000AAAA0000A0000	RRSM48CF
130M220QEBM3KR401	OSPE32-00000-00400-000000	A55L0250/000AAAA0000A0000	RS108SR5007
130M302QEBT1KR401	OSPE32-00000-00405-000000	A55L0250/000AAAA0000F0000	RS10M07S4SN1JW
130M305QBM3KG241	OSPE32-00000-00405-000000	A55L0250/000AAAA0000F0000	RS10M17L4SN1JW
130M305QBM3KR401	OSPE32-00000-00450-000000	A55L0260/000AAAA0000A0000	RS10M17S1SN9JW
130M305QEBM3KG241	OSPE32-00000-00450-000000	A55L0260/000AAAA0000A0000	RS10M17S4SN1JW
130M305QEBM3KG321	OSPE32-00000-00450-061100	A55L0275/000AAAA0000A0000	RS10M17S4SN1JWS
130M305QEBM3KR401	OSPE32-00000-00450-061100	A55L0275/000AAAA0000A0000	RS10M17S4SN1TW
130M305QEBT1KR401	OSPE32-00000-00500-000000	A55L0300/000AAAA0000A0000	RS10M17S4SN9GW
130M310QBM3KG241	OSPE32-00000-00500-000000	A55L0300/000AAAA0000A0000	RS10M17S4SN9JW
130M310QBM3KG321	OSPE32-00000-00500-060000	A55L0320/000AAAA0000A0000	RS10M17S4SV1JW
130M310QEBM3KG321	OSPE32-00000-00500-060000	A55L0320/000AAAA0000A0000	RS10M25S1SN1JW
130M310QEBM3KR401	OSPE32-00000-00510-000000	A55L0400/000AAAA0000A0000	RS10M25S4SN1GW
130M310QEBT1KR401	OSPE32-00000-00510-000000	A55L0400/000AAAA0000A0000	RS10M25S4SN1JW
130M320QBM3KR401	OSPE32-00000-00520-060000	A55L0400/000AAAA0000F0000	RS10M25S4SN1TW
130M320QEBM3KR401	OSPE32-00000-00520-060000	A55L0400/000AAAA0000F0000	RS10M25S4SN1UW
130M320QEBT1KR401	OSPE32-00000-00550-000000	A55L0420/000AAAA0000A0000	RS10M25S4SN1YW
130S205QEBM3KD8021	OSPE32-00000-00550-000000	A55L0420/000AAAA0000A0000	RS10M25S4SN9JW
130S210QBM3KD8021	OSPE32-00000-00555-0G0000	A55L0500/000AAAA0000A0000	RS10M35S1SN1JW
130S305QEBM3KD10041	OSPE32-00000-00555-0G0000	A55L0500/000AAAA0000A0000	RS10M35S4SN1GW
130S305QEBM3KD10081	OSPE32-00000-00560-000000	A55L0500/000AAAA0000F0000	RS10M35S4SN1GWS
130S305QEBM3KD8021	OSPE32-00000-00560-000000	A55L0500/000AAAA0000F0000	RS10M35S4SN1JW
130S305QEBM3KD8027	OSPE32-00000-00570-000000	A55L0500/000CAAA0000A0000	RS10M35S4SN1JWS
130S310QEBF1KD8021	OSPE32-00000-00570-000000	A55L0500/000CAAA0000A0000	RS10M35S4SN9JW
130S310QEBM3KD10047	OSPE32-00000-00600-000000	A55L0630/000AAAA0000A0000	RS10M35S4SV9JW
130S310QEBM3KD8027	OSPE32-00000-00600-000000	A55L0630/000AAAA0000A0000	RS10R17S4SN1GW
130S310QEBT1KD8027	OSPE32-00000-00600-000114	A55L0800/000AAAA0000A0000	RS10R17S4SN1JW
131079-01-1	OSPE32-00000-00600-000114	A55L0800/000AAAA0000A0000	RS10R17S4SN1JWS
131082-01	OSPE32-00000-00660-000000	A55L0950/000AAAA0000A0000	RS10R17S4SN1TW
131083-01	OSPE32-00000-00660-000000	A55L0950/000AAAA0000A0000	RS10R17S4SN9GW
131083-04	OSPE32-00000-00700-060000	A55L1000/000AAAA0000A0000	RS10R17S4SN9JW
131084-01	OSPE32-00000-00700-060000	A55L1000/000AAAA0000A0000	RS10R17S4SV1JW
1310-QC	OSPE32-00000-00715-0R0118	A55L1500/020AAAA0000A0000	RS10R25S1SN1JW
1310-QC	OSPE32-00000-00715-0R0118	A55L1500/020AAAA0000A0000	RS10R25S4SN1GW
13110 M	OSPE32-00000-00720-000000	A55M0010/000AAAA0000A0000	RS10R25S4SN1JW
131-200250	OSPE32-00000-00720-000000	A55M0010/000AAAA0000A0000	RS10R25S4SN1JWS
1315-QC	OSPE32-00000-00720-060000	A55M0025/000AAAA0000A0000	RS10R25S4SN1TW
131-600078	OSPE32-00000-00720-060000	A55M0025/000AAAA0000A0000	RS10R25S4SN1UW
131-600117	OSPE32-00000-00750-0G0000	A55M0025/000AAAA0000F0000	RS10R25S4SN9JW
131-600118	OSPE32-00000-00750-0G0000	A55M0025/000AAAA0000F0000	RS10R35S4SN1JW
131-600130	OSPE32-00000-00750-100000	A55M0030/000AAAA0000A0000	RS10R35S4SN1JWS
131-600131	OSPE32-00000-00750-100000	A55M0030/000AAAA0000A0000	RS10R35S4SN9JW
131-600134	OSPE32-00000-00770-060000	A55M0050/000AAAA0000A0000	RS10R35S4SN9JWXG041

131-600160	OSPE32-00000-00770-060000	A55M0050/000AAAA0000A0000	RS10R35S4SNXG032
131-600210	OSPE32-00000-00781-060000	A55M0050/000AAAA0000F0000	RS10R35S4SV9JW
131-600229	OSPE32-00000-00781-060000	A55M0050/000AAAA0000F0000	RS110MR1000
131-600232	OSPE32-00000-00800-000000	A55M0070/000AAAA0000A0000	RS110MR1100
131-600234	OSPE32-00000-00800-000000	A55M0070/000AAAA0000A0000	RS110MR1101
131-600295	OSPE32-00000-00820-000000	A55M0080/000AAAA0000A0000	RS115-010-L2/MU115-039
13167FIL	OSPE32-00000-00820-000000	A55M0080/000AAAA0000A0000	RS115-015-010L2/MU115-039
13167FIL	OSPE32-00000-00850-000000	A55M0100/000AAAA0000A0000	RS115-020-S2/MU115-026
13168FIL	OSPE32-00000-00850-000000	A55M0100/000AAAA0000A0000	RS115-025-L2/MU115-039
13168FIL	OSPE32-00000-00850-061000	A55M0100/006AAAA0000A0000	RS120GR1000
131-700001	OSPE32-00000-00850-061000	A55M0100/006AAAA0000A0000	RS120GR1022
131-700002	OSPE32-00000-00881-B61000	A55M0120/000AAAA0000A0000	RS120GR1100
131-700003	OSPE32-00000-00881-B61000	A55M0120/000AAAA0000A0000	RS120KR1100
131-700008	OSPE32-00000-00920-000000	A55M0125/000AAAA0000A0000	RS130ER1000
131-700009	OSPE32-00000-00920-000000	A55M0125/000AAAA0000A0000	RS130ER1026
131-700011	OSPE32-00000-00970-000000	A55M0150/000AAAA0000A0000	RS130ER1100
131-700015	OSPE32-00000-00970-000000	A55M0150/000AAAA0000A0000	RS130ER1120
131-700016	OSPE32-00000-00970-100000	A55M0160/000AAAA0000A0000	RS130ER5011
131-700030	OSPE32-00000-00970-100000	A55M0160/000AAAA0000A0000	RS142-030-010S2/MU142-078
131-700031	OSPE32-00000-01000-000000	A55M0192/000AAAA0000A0000	RS142-030-S2/MU142-078
131-700032	OSPE32-00000-01000-000000	A55M0192/000AAAA0000A0000	RS16E07S1SN1JW
131-700033	OSPE32-00000-01000-060000	A55M0200/000AAAA0000A0000	RS16E17S1SN1GW
131-700090	OSPE32-00000-01000-060000	A55M0200/000AAAA0000A0000	RS16E17S1SN1JW
131-700100	OSPE32-00000-01200-000000	A55M0232/000AAAA0000A0000	RS16E17S1SN1UW
131-700101	OSPE32-00000-01200-000000	A55M0232/000AAAA0000A0000	RS16E17S1SN9UW
131-700102	OSPE32-00000-01210-000000	A55M0250/000AAAA0000A0000	RS16E17S1SV1UW
131-700103	OSPE32-00000-01210-000000	A55M0250/000AAAA0000A0000	RS16E25S1SN1GW
131-700104	OSPE32-00000-01220-100000	A55M0250/000AAAA0000F0000	RS16E25S1SN1JW
131-700105	OSPE32-00000-01220-100000	A55M0250/000AAAA0000F0000	RS16E25S1SN1JWX985
131-700111	OSPE32-00000-01310-000000	A55M0260/000AAAA0000A0000	RS16E25S1SN9GW
131-700112	OSPE32-00000-01310-000000	A55M0260/000AAAA0000A0000	RS16E25S1SN9JW
131-700114	OSPE32-00000-01376-060000	A55M0320/000AAAA0000A0000	RS16E35S1SN1GW
131-700124	OSPE32-00000-01376-060000	A55M0320/000AAAA0000A0000	RS16E35S1SN1JW
131-700134	OSPE32-00000-01411-B60000	A55M0350/000AAAA0000A0000	RS16E35S1SN9GW
131-700135	OSPE32-00000-01411-B60000	A55M0350/000AAAA0000A0000	RS16E35S1SN9JW
131-700140	OSPE32-00000-01500-000000	A55M0400/000AAAA0000A0000	RS183-5166
131-700141	OSPE32-00000-01500-000000	A55M0400/000AAAA0000A0000	RS183-5166
131-700143	OSPE32-00000-01500-060000	A55M0450/000AAAA0000A0000	RS183-5188
131-700145	OSPE32-00000-01500-060000	A55M0450/000AAAA0000A0000	RS183-5188
131-700146	OSPE32-00000-01525-0R0000	A55M0500/000AAAA0000A0000	RS210LR1001
131-700147	OSPE32-00000-01525-0R0000	A55M0500/000AAAA0000A0000	RS220FR1000
131-700155	OSPE32-00000-01600-000000	A55M0540/000AAAA0000A0000	RS220FR1022
131-700156	OSPE32-00000-01600-000000	A55M0540/000AAAA0000A0000	RS220FR1039
131-700157	OSPE32-00000-01670-000000	A55M0600/000AAAA0000A0000	RS220FR1066
131-700165	OSPE32-00000-01670-000000	A55M0600/000AAAA0000A0000	RS220FR1100
13171FIL	OSPE32-00000-01750-000000	A55M0700/000AAAA0000A0000	RS220FR1113
13171FIL	OSPE32-00000-01750-000000	A55M0700/000AAAA0000A0000	RS220FR1118
13172FIL	OSPE32-00000-01800-0G0000	A55N0025/000AAAA0000A0000	RS220FR1133
13172FIL	OSPE32-00000-01800-0G0000	A55N0025/000AAAA0000A0000	RS220FR1134
13179FIL	OSPE32-00000-01811-B00000	A55N0025/000AAAA0000F0000	RS220FR1135
13179FIL	OSPE32-00000-01811-B00000	A55N0025/000AAAA0000F0000	RS220FR1300
13183FIL	OSPE32-00000-01811-B60000	A55N0050/000AAAA0000A0000	RS220KR1000
13183FIL	OSPE32-00000-01811-B60000	A55N0050/000AAAA0000A0000	RS220KR1142

13184FIL	OSPE32-00000-01870-000000	A55N0050/000AAAA0000F0000	RS230C1R1141
13184FIL	OSPE32-00000-01870-000000	A55N0050/000AAAA0000F0000	RS230CR1000
13185FIL	OSPE32-00000-02620-000000	A55N0075/000AAAA0000A0000	RS230CR1001
13185FIL	OSPE32-00000-02620-000000	A55N0075/000AAAA0000A0000	RS230CR1100
13186FIL	OSPE32-00000-02710-0D0000	A55N0080/000AAAA0000A0000	RS230CR1200
13186FIL	OSPE32-00000-02710-0D0000	A55N0080/000AAAA0000A0000	RS230CR1300
13187FIL	OSPE32-00000-03000-000000	A55N0080/000AAAA0000F0000	RS230FR1111
13187FIL	OSPE32-00000-03000-000000	A55N0080/000AAAA0000F0000	RS232-EASI-0250
131F4497-495900C2	OSPE32-00000-03011-060000	A55N0100/000AAAA0000A0000	RS240-3647
131F4497-495900C2	OSPE32-00000-03011-060000	A55N0100/000AAAA0000A0000	RS240-3647
131F46	OSPE32-00000-03011-B00000	A55N0100/000AAAA0000F0000	RS240BR1000
131F46	OSPE32-00000-03011-B00000	A55N0100/000AAAA0000F0000	RS240BR1001
131F46-2995-4818653D	OSPE32-00000-03120-000000	A55N0150/000AAAA0000A0000	RS240BR1041
131F46-2995-4818653D	OSPE32-00000-03120-000000	A55N0150/000AAAA0000A0000	RS240BR1100
131K0111	OSPE32-00000-05000-000000	A55N0160/000AAAA0000A0000	RS240BR1101
131K0111	OSPE32-00000-05000-000000	A55N0160/000AAAA0000A0000	RS240BR1105
131K0111-2995-481865C2	OSPE32-0000A300700-060413	A55N0200/000AAAA0000A0000	RS240BR1133
131K0111-2995-481865C2	OSPE32-0000A300700-060413	A55N0200/000AAAA0000A0000	RS240BR1142
131K0397	OSPE32-0000A301845-000506	A55N0225/000AAAA0000A0000	RS240BR1200
131K0397	OSPE32-0000A301845-000506	A55N0225/000AAAA0000A0000	RS240BR1300
131K0397-495910N7	OSPE32-0000A700250-00004F	A55N0250/000AAAA0000A0000	RS25E07S1SN1JW
131K0397-495910N7	OSPE32-0000A700250-00004F	A55N0250/000AAAA0000A0000	RS25E07S1SN9JW
131K0490	OSPE32-0000A701650-0F1004	A55N0320/000AAAA0000A0000	RS25E17L1SN1GW
131K0490	OSPE32-0000A701650-0F1004	A55N0320/000AAAA0000A0000	RS25E17S1SN1GW
131K0490-2995	OSPE32-0000A702650-0F1004	A55N0320/000AAAA0000F0000	RS25E17S1SN1JW
131K0490-2995	OSPE32-0000A702650-0F1004	A55N0320/000AAAA0000F0000	RS25E17S1SN1UW
131K0490-2995-48358001N7	OSPE32-0000C100450-1R0114	A55N0400/000AAAA0000A0000	RS25E17S1SN9JW
131K0490-2995-48358001N7	OSPE32-0000C100450-1R0114	A55N0400/000AAAA0000A0000	RS25E25S1SN1GW
131K0490-48865002N7	OSPE32-0001A201500-060117	A55N0500/000AAAA0000A0000	RS25E25S1SN1JW
131K0490-48865002N7	OSPE32-0001A201500-060117	A55N0500/000AAAA0000A0000	RS25E25S1SN1UW
131K0490-48867001N7	OSPE32-0002AH01600-0D0000	A55N0530/000AAAA0000F0000	RS25E35A1SN9JW
131K0490-48867001N7	OSPE32-0002AH01600-0D0000	A55N0530/000AAAA0000F0000	RS25E35S1SN1JW
131K0496	OSPE32-0002AH01800-0D0000	A55N0950/000AAAA0000A0000	RS25E35S1SN1JWS
131K0496	OSPE32-0002AH01800-0D0000	A55N0950/000AAAA0000A0000	RS25E35S1SN1UW
131K0497	OSPE32-00100-00405-000000	A55N1200/000AAAA0000A0000	RS25E35S1SN9JW
131K0497	OSPE32-00100-00405-000000	A55N1200/000AAAA0000A0000	RS25E35S1SN9UWS07
131K0497-2995-482740C2	OSPE32-00100-00411-061000	A55N1320/000AAAA0000A0000	RS25E35S1SV9JW
131K0497-2995-482740C2	OSPE32-00100-00411-061000	A55N1320/000AAAA0000A0000	RS25M07S4SN1JW
131K0497-2995-496125C2	OSPE32-00100-00710-0D0000	A55P0050/000AAAA0000A0000	RS25M07S4SN9JW
131K0497-2995-496125C2	OSPE32-00100-00710-0D0000	A55P0050/000AAAA0000A0000	RS25M17S4SN1GW
131K0497-495900C2	OSPE32-00100-00720-000000	A55P0060/000AAAA0000A0000	RS25M17S4SN1JW
131K0497-495900C2	OSPE32-00100-00720-000000	A55P0060/000AAAA0000A0000	RS25M17S4SN1TW
131K0497-495900F4	OSPE32-00100-00800-0F0000	A55P0080/000AAAA0000A0000	RS25M17S4SN1UW
131K0497-495900F4	OSPE32-00100-00800-0F0000	A55P0080/000AAAA0000A0000	RS25M17S4SN1YW
131K0497-495910N7	OSPE32-00100-00850-060000	A55P0100/000AAAA0000A0000	RS25M17S4SN9JW
131K0497-495910N7	OSPE32-00100-00850-060000	A55P0100/000AAAA0000A0000	RS25M25L1SN1JWS
131K05	OSPE32-00100-00851-060000	A55P0160/000AAAA0000A0000	RS25M25L4SN1JWS
131K05	OSPE32-00100-00851-060000	A55P0160/000AAAA0000A0000	RS25M25S4SN1GW
131K05-2995-481865A5	OSPE32-00100-00856-000400	A55P0180/000AAAA0000A0000	RS25M25S4SN1JW
131K05-2995-481865A5	OSPE32-00100-00856-000400	A55P0180/000AAAA0000A0000	RS25M25S4SN9JW
131K05-2995-481865C2	OSPE32-00100-00860-0G0000	A55P0200/000AAAA0000A0000	RS25M35S4SN1JW
131K05-2995-481865C2	OSPE32-00100-00860-0G0000	A55P0200/000AAAA0000A0000	RS25M35S4SN9JW
131K05-4270-4810003D	OSPE32-00100-00881-B61000	A55P0250/000AAAA0000A0000	RS25M35S4SV9JW

131K05-4270-4810003D	OSPE32-00100-00881-B61000	A55P0250/000AAAA0000A0000	RS25R17L4SN1GW
131K05-N0-H111C2	OSPE32-00100-00900-000000	A55P0250/000AAAA0000F0000	RS25R17S4SN1GW
131K05-N0-H111C2	OSPE32-00100-00900-000000	A55P0250/000AAAA0000F0000	RS25R17S4SN1JW
131K16	OSPE32-00100-00920-0D0000	A55P0260/000AAAA0000A0000	RS25R17S4SN1TW
131K16	OSPE32-00100-00920-0D0000	A55P0260/000AAAA0000A0000	RS25R25S4SN1JW
131K16-2995-481865C2	OSPE32-00100-00970-100000	A55P0320/000AAAA0000A0000	RS25R25S4SN1JWS
131K16-2995-481865C2	OSPE32-00100-00970-100000	A55P0320/000AAAA0000A0000	RS25R25S4SN1TW
131K16-2995-483510S6	OSPE32-00100-01000-000000	A55P0320/000AAAA0000F0000	RS25R25S4SN9JW
131K16-2995-483510S6	OSPE32-00100-01000-000000	A55P0320/000AAAA0000F0000	RS25R35S1SN1JW
131K16-2995-492425C2	OSPE32-00100-01210-000000	A55P0320/017AAAA0000F0000	RS25R35S4SN1JW
131K16-2995-492425C2	OSPE32-00100-01210-000000	A55P0320/017AAAA0000F0000	RS25R35S4SN1JWS
131K1650-2995-481865C2	OSPE32-00100-01211-B00000	A55P0400/000AAAA0000A0000	RS25R35S4SN1TW
131K1650-2995-481865C2	OSPE32-00100-01211-B00000	A55P0400/000AAAA0000A0000	RS25R35S4SN9JW
131K65	OSPE32-00100-01220-100000	A55P0410/000AAAA0000A0000	RS25R35S4SN9JWXG041
131K65	OSPE32-00100-01220-100000	A55P0410/000AAAA0000A0000	RS25R35S4SN9YW
131K65-2995-492425C2	OSPE32-00100-01300-000000	A55P0600/000AAAA0000F0000	RS2600-3/16F-CE
131K65-2995-492425C2	OSPE32-00100-01300-000000	A55P0600/000AAAA0000F0000	RS310NR1000
131K65-4270-4810003D	OSPE32-00100-01376-060000	A55P0690/000AAAA0000A0000	RS310NR1159
131K65-4270-4810003D	OSPE32-00100-01376-060000	A55P0690/000AAAA0000A0000	RS310NR1209
131K65-4270-486265C2	OSPE32-00100-01376-061000	A55Q0050/000AAAA0000A0000	RS310SR1114
131K65-4270-486265C2	OSPE32-00100-01376-061000	A55Q0050/000AAAA0000A0000	RS320CR1034
131M14	OSPE32-00100-01411-060000	A55Q0100/000AAAA0000A0000	RS320CR1100
131M14	OSPE32-00100-01411-060000	A55Q0100/000AAAA0000A0000	RS320HAR1114
131M14-8993-4889800A	OSPE32-00100-01600-000000	A55Q0150/000AAAA0000A0000	RS320HR1000
131M14-8993-4889800A	OSPE32-00100-01600-000000	A55Q0150/000AAAA0000A0000	RS320HR1015
131M14-8993-4889803D	OSPE32-00100-01670-000000	A55Q0250/000AAAA0000A0000	RS320HR1100
131M14-8993-4889803D	OSPE32-00100-01670-000000	A55Q0250/000AAAA0000A0000	RS320HR1101
131M14-8993-4889806J	OSPE32-00100-01711-B00000	A55Q0400/000AAAA0000A0000	RS320HR1111
131M14-8993-4889806J	OSPE32-00100-01711-B00000	A55Q0400/000AAAA0000A0000	RS320HR1151
131M14-8993-4889807J	OSPE32-00100-02400-061012	A55Q0440/012AAAA0000A0000	RS320HR1159
131M14-8993-4889807J	OSPE32-00100-02400-061012	A55Q0440/012AAAA0000A0000	RS320HR1200
131M14-8993-488980A2	OSPE32-00100-02620-000074	A55Q0440/012AAAA0000F0000	RS320HR1209
131M14-8993-488980A2	OSPE32-00100-02620-000074	A55Q0440/012AAAA0000F0000	RS320HR1300
131M14-8993-488980C1	OSPE32-00100-02690-000103	A55Q0800/000AAAA0000A0000	RS320HR1310
131M14-8993-488980C1	OSPE32-00100-02690-000103	A55Q0800/000AAAA0000A0000	RS32E17S1SN1UWS
131M14-8993-488980C2	OSPE32-00100-05700-000000	A55Q1000/000AAAA0000A0000	RS32E25L1SN9JW
131M14-8993-488980C2	OSPE32-00100-05700-000000	A55Q1000/000AAAA0000A0000	RS32E35S1SN9JWS07
131M15	OSPE32-0010A301500-000000	A55Q1500/000AAAA0000A0000	RS32M35S4SN1JW
131M15	OSPE32-0010A301500-000000	A55Q1500/000AAAA0000A0000	RS32M35S4SN1UW
131M15-482605C2	OSPE32-0010A700250-00004F	A56K0050/000AAAA0000A0000	RS32R17S4SN1JW
131M15-482605C2	OSPE32-0010A700250-00004F	A56K0050/000AAAA0000A0000	RS32R35S4SN1JW
131M15-8993-488980C2	OSPE32-0010A701320-000400	A56K0050/000AAAA00S0A0068	RS32R35S4SN1JWS
131M15-8993-488980C2	OSPE32-0010A701320-000400	A56K0050/000AAAA00S0A0068	RS32R35S4SN9JW
131M7450	OSPE32-0010A702320-00017F	A56K0050/000AAAA00T0A0065	RS32R35S4SN9JWXG041
131M7450	OSPE32-0010A702320-00017F	A56K0050/000AAAA00T0A0065	RS330ER1000
131M7450-8993-488980C2	OSPE32-00200-00250-000000	A56K0050/000BAAA00H0A0000	RS330ER1020
131M7450-8993-488980C2	OSPE32-00200-00250-000000	A56K0050/000BAAA00H0A0000	RS330ER1027
131M7450-8993-495865C2	OSPE32-00200-00500-000173	A56K0060/000AAAA0000A0000	RS330ER1100
131M7450-8993-495865C2	OSPE32-00200-00500-000173	A56K0060/000AAAA0000A0000	RS330ER1101
131M74-8993-488980A2	OSPE32-00200-00900-000000	A56K0070/000AAAA0000A0000	RS330ER1121
131M74-8993-488980A2	OSPE32-00200-00900-000000	A56K0070/000AAAA0000A0000	RS330ER1200
131M75	OSPE32-00200-01070-0D0000	A56L0050/000AAAA0000A0000	RS330ER1209
131M75	OSPE32-00200-01070-0D0000	A56L0050/000AAAA0000A0000	RS330ER1300

131M7550	OSPE32-00200-01300-000000	A56L0160/000AAAA0000A0000	RS340CR1000
131M7550	OSPE32-00200-01300-000000	A56L0160/000AAAA0000A0000	RS340CR1015
131M7550-8993	OSPE32-00200-01600-000000	A56LB2176DC2A23	RS340CR1020
131M7550-8993	OSPE32-00200-01600-000000	A56LB2176DC2A23	RS340CR1048
131M7550-8993-481045C2	OSPE32-00200-01670-000000	A56M0125/000AAAA0000A0000	RS340CR1100
131M7550-8993-481045C2	OSPE32-00200-01670-000000	A56M0125/000AAAA0000A0000	RS340CR1112
131M7550-8993-483590S4	OSPE32-00200-02710-0D0000	A56M0200/000AAAA0000F0000	RS340CR1143
131M7550-8993-483590S4	OSPE32-00200-02710-0D0000	A56M0200/000AAAA0000F0000	RS340CR1158
131M7550-8993-4889800A	OSPE32-00200-03600-100003	A56N0005/000AAAA0000A0000	RS340CR1174
131M7550-8993-4889800A	OSPE32-00200-03600-100003	A56N0005/000AAAA0000A0000	RS340CR1200
131M7550-8993-4889803D	OSPE32-02200-00500-000143	A56N0025/000AAAA0000A0000	RS340CR1209
131M7550-8993-4889803D	OSPE32-02200-00500-000143	A56N0025/000AAAA0000A0000	RS340CR1300
131M7550-8993-4889806J	OSPE32-02200-00500-000173	A56P0285/000AAAA0000A0000	RS340CR1318
131M7550-8993-4889806J	OSPE32-02200-00500-000173	A56P0285/000AAAA0000A0000	RS35TC-48
131M7550-8993-488980C2	OSPE32-02200-00800-000143	A56Q0345/000AAAA0000A0000	RS40E07S1SN1JW
131M7550-8993-488980C2	OSPE32-02200-00800-000143	A56Q0345/000AAAA0000A0000	RS40E17S1SN1JW
131M7553-8993-488980C2	OSPE32-10300-00120-000008	A5A020ZNMK2	RS40E17S1SN9JW
131M7553-8993-488980C2	OSPE32-10300-00120-000008	A5B020ZNMK2	RS40E25S1SN9JW
131M75-8993-4889803D	OSPE32-10300-00120-0R0110	A5B060N	RS40E35S1SN1JW
131M75-8993-4889803D	OSPE32-10300-00120-0R0110	A5B060Z1-220N	RS40E35S1SN1JWS
131T21	OSPE32-10300-00130-000000	A5B060Z1-240N464	RS40E35S1SN9JW
131T21	OSPE32-10300-00130-000000	A5B060Z17-250N	RS40E35S1SN9JWS
131T2108	OSPE32-10300-00175-060000	A5C020ZNMK2	RS410QR1176
131T2108	OSPE32-10300-00175-060000	A5E050T36-180N	RS410RR1100
131T2108-2995-481865C2	OSPE32-10300-00175-B00000	A5E050ZN	RS420JR1000
131T2108-2995-481865C2	OSPE32-10300-00175-B00000	A5F050ZN	RS420JR1007
131T21-2995-4818653D	OSPE32-10300-00250-00011F	A605-12W-BR	RS420JR1018
131T21-2995-4818653D	OSPE32-10300-00250-00011F	A605-12W-BR	RS420JR1048
131T21-2995-481865C2	OSPE32-10300-00250-0G0000	A61M0050/000AAAA0000A0000	RS420JR1063
131T21-2995-481865C2	OSPE32-10300-00250-0G0000	A61M0050/000AAAA0000A0000	RS420JR1100
131T21-2995-482725C2	OSPE32-10300-00300-000000	A61M0200/000AAAA0000A0000	RS420JR1155
131T21-2995-482725C2	OSPE32-10300-00300-000000	A61M0200/000AAAA0000A0000	RS420JR1172
131T21-2995-492425F4	OSPE32-10300-00300-060000	A61N0100/000AAAA0000A0000	RS420JR1300
131T21-2995-492425F4	OSPE32-10300-00300-060000	A61N0100/000AAAA0000A0000	RS423
131T21-4270-486265F4	OSPE32-10300-00300-B60000	A65K0040/000AAAA0000A0000	RS424
131T21-4270-486265F4	OSPE32-10300-00300-B60000	A65K0040/000AAAA0000A0000	RS430FR1000
131T22	OSPE32-10300-00300-B61000	A65K0060/000AAAA0000A0000	RS430FR1114
131T22	OSPE32-10300-00300-B61000	A65K0060/000AAAA0000A0000	RS430FR1145
131T22-2995-492425F4	OSPE32-10300-00350-000000	A65K0080/000AAAA0000A0000	RS430HR1100
131T22-2995-492425F4	OSPE32-10300-00350-000000	A65K0080/000AAAA0000A0000	RS430HR1105
131T22-4270-481044F4	OSPE32-10300-00400-B60000	A65K0320/000AAAA0000A0000	RS430HR1300
131T22-4270-481044F4	OSPE32-10300-00400-B60000	A65K0320/000AAAA0000A0000	RS430HR1324
131T23	OSPE32-10300-00450-0D0000	A65L0050/000AAAA0000A0000	RS430HR1343
131T23	OSPE32-10300-00450-0D0000	A65L0050/000AAAA0000A0000	RS440GAR1115
131T2301	OSPE32-10300-00500-000000	A65L0080/000AAAA0000A0000	RS440GR1000
131T2301	OSPE32-10300-00500-000000	A65L0080/000AAAA0000A0000	RS440GR1016
131T23-495905C2	OSPE32-10300-00500-B60000	A65L0100/000AAAA0000A0000	RS440GR1017
131T23-495905C2	OSPE32-10300-00500-B60000	A65L0100/000AAAA0000A0000	RS440GR1022
131T29	OSPE32-10300-00550-000000	A65L0125/000AAAA0000A0000	RS440GR1028
131T29	OSPE32-10300-00550-000000	A65L0125/000AAAA0000A0000	RS440GR1041
131T2901	OSPE32-10300-00640-000000	A65M0025/000AAAA0000A0000	RS440GR1052
131T2901	OSPE32-10300-00640-000000	A65M0025/000AAAA0000A0000	RS440GR1066
131T2901-2995-481865C2	OSPE32-10300-00640-0G0000	A65M0050/000AAAA0000A0000	RS440GR1100

131T2901-2995-481865C2	OSPE32-10300-00640-0G0000	A65M0050/000AAAA0000A0000	RS440GR1126
131T29-2995-4818653D	OSPE32-10300-00800-000000	A65M0080/000AAAA0000A0000	RS440GR1135
131T29-2995-4818653D	OSPE32-10300-00800-000000	A65M0080/000AAAA0000A0000	RS440GR1144
131T29-2995-481865A2	OSPE32-10300-00800-060000	A65M0160/000AAAA0000A0000	RS440GR1165
131T29-2995-481865A2	OSPE32-10300-00800-060000	A65M0160/000AAAA0000A0000	RS440GR1300
131T29-2995-481865C2	OSPE32-10300-01350-000000	A65M0320/000AAAA0000A0000	RS440LR1105
131T29-2995-481865C2	OSPE32-10300-01350-000000	A65M0320/000AAAA0000A0000	RS453
131V5306	OSPE32-10300-01550-020000	A65N0075/000AAAA0000A0000	RS50E07S1SN1UW
131V5306	OSPE32-10300-01550-020000	A65N0075/000AAAA0000A0000	RS50E17S1SN1JW
131V5306-2995-4818653D	OSPE32-10300-01575-P00050	A65N0080/000AAAA0000A0000	RS50E17S1SN9JW
131V5306-2995-4818653D	OSPE32-10300-01575-P00050	A65N0080/000AAAA0000A0000	RS50E35S1SN1JW
131V5306-2995-481865C2	OSPE32-10300-01650-000000	A65N0080/000AAAA00A0A0000	RS50E35S1SN1JWS
131V5306-2995-481865C2	OSPE32-10300-01650-000000	A65N0080/000AAAA00A0A0000	RS50E35S1SN9JW
131V5306-483371C2	OSPE32-10300-02000-000000	A65N0100/000AAAA0000A0000	RS510LR1008
131V5306-483371C2	OSPE32-10300-02000-000000	A65N0100/000AAAA0000A0000	RS510LR1100
131V5306-495905C2	OSPE32-10303-00200-060000	A65N0125/000AAAA0000A0000	RS510LR1125
131V5306-495905C2	OSPE32-10303-00200-060000	A65N0125/000AAAA0000A0000	RS510LR1500
131V5363	OSPE32-10303-01050-000000	A65N0125/000AAAA0000F0000	RS520GR1000
131V5363	OSPE32-10303-01050-000000	A65N0125/000AAAA0000F0000	RS520GR1009
131V5363-2995-4818653D	OSPE32-1030A300060-06000F	A65N0400/000AAAA0000A0000	RS520GR1012
131V5363-2995-4818653D	OSPE32-1030A300060-06000F	A65N0400/000AAAA0000A0000	RS520GR1021
131V5363-4270-486265C2	OSPE32-10400-00130-000000	A66L0050/000AAAA0000A0000	RS520GR1100
131V5363-4270-486265C2	OSPE32-10400-00130-000000	A66L0050/000AAAA0000A0000	RS520GR1204
131V5406	OSPE32-10400-00250-000000	A66M0080/000AAAA0000A0000	RS520GR1300
131V5406	OSPE32-10400-00250-000000	A66M0080/000AAAA0000A0000	RS530ER1100
131V5406-2995-4818653D	OSPE32-10400-00250-00011F	A6A060Z220N	RS530ER1500
131V5406-2995-4818653D	OSPE32-10400-00250-00011F	A6A060Z250N	RS530FR1125
131V5406-2995-481865C2	OSPE32-10400-00300-000000	A6A060Z40-145N	RS540CR1000
131V5406-2995-481865C2	OSPE32-10400-00300-000000	A6A060ZN	RS540CR1100
131V5406-4270-481000C2	OSPE32-10400-00350-000000	A6A125ZN559	RS540CR1500
131V5406-4270-481000C2	OSPE32-10400-00350-000000	A6B125TN	RS540CR1706
131V5406-492190C2	OSPE32-10400-00375-000000	A6B125ZN	RS60-005-S2/MU60-001
131V5406-492190C2	OSPE32-10400-00375-000000	A6ES0347L2K	RS60-005-S2/MU60-321
131V5406-495905C2	OSPE32-10400-00400-B60000	A6ES0578L2K	RS60-010-S2/MU60-001
131V5406-495905C2	OSPE32-10400-00400-B60000	A6ES0578L2KRG	RS60-020-011SE2/MU60-234
131V5406-495905F4	OSPE32-10400-00425-000000	A6ES1155L2K	RS60-020-S2/MU60-001
131V5406-495905F4	OSPE32-10400-00425-000000	A6ES1733L2K	RS60-025-S2/MU60-321
131V5463	OSPE32-10400-00450-000000	A6ES2310H2KMQ/RF	RS60-030-S2
131V5463	OSPE32-10400-00450-000000	A6ES2310L2K	RS60-100-S2/MU60-010
131V5463-2995-482725C2	OSPE32-10400-00450-060000	A6EU6-MG	RS620GR1500
131V5463-2995-482725C2	OSPE32-10400-00450-060000	A6MC4	RS63E07S1SN1JW
131V5463-4270-486265C2	OSPE32-10400-00500-000000	A6ME4-MG	RS63E35S1SN9JW
131V5463-4270-486265C2	OSPE32-10400-00500-000000	A6TMC4	RS640ER1500
131V5490	OSPE32-10400-00500-060000	A6TU6-MG	RS90-005-S2/MU90-088
131V5490	OSPE32-10400-00500-060000	A6UC4	RS90-020-S2/MU90-085
131V5490-2995-48396001N7	OSPE32-10400-00550-000000	A6UC6	RS90-020-S2/MU90-088
131V5490-2995-48396001N7	OSPE32-10400-00550-000000	A75K0050/000AAAAA000A0000	RSM1207
131V5490-48865001N7	OSPE32-10400-00650-000410	A75K0050/000AAAAA000A0000	RSM1207-GY
131V5490-48865001N7	OSPE32-10400-00650-000410	A75K0125/000AAAAA000A0000	RSM1207-O2S
131V5497	OSPE32-10400-01040-060000	A75K0125/000AAAAA000A0000	RSM1207-O2SLT
131V5497	OSPE32-10400-01040-060000	A75K0250/000AAAAA000A0000	RSM1607
131V5497-2995-482740C2	OSPE32-10400-01040-061000	A75K0250/000AAAAA000A0000	RSM407
131V5497-2995-482740C2	OSPE32-10400-01040-061000	A75K0300/000AAAAA000A0000	RSM407-C1S

131V5497-495900C2	OSPE32-10400-01300-00011F	A75K0300/000AAAAA000A0000	RSM407-CM
131V5497-495900C2	OSPE32-10400-01300-00011F	A75K0800/000AAAAA000A0000	RSM407-O1S
131V5497-495910N7	OSPE32-10403-00150-000000	A75K0800/000AAAAA000A0000	RSM408
131V5497-495910N7	OSPE32-10403-00150-000000	A75L0250/000AAAAA000A0000	RSM4872-CM
131X1101	OSPE32-10403-00660-000000	A75L0250/000AAAAA000A0000	RSM4872-O1S
131X1101	OSPE32-10403-00660-000000	A75L0320/000AAAAA000A0000	RSM4872-O1SCSS
131X1131-496555C2	OSPE32-1040A201700-000000	A75L0320/000AAAAA000A0000	RSM4882
131X1131-496555C2	OSPE32-1040A201700-000000	A75N0125/000AAAAA000A0000	RSM607
13207FIL	OSPE32-13300-00300-000000	A75N0125/000AAAAA000A0000	RSM6075
13207FIL	OSPE32-13300-00300-000000	A75Q0045/000AAAAA000A0000	RSM607-C1S
13209FIL	OSPE32-13300-00300-1R0040	A75Q0045/000AAAAA000A0000	RSM607-C2S
13209FIL	OSPE32-13300-00300-1R0040	A75Q0070/000AAAAA000A0000	RSM607-O1S
13210 A	OSPE32-14300-01050-000000	A75Q0070/000AAAAA000A0000	RSM607-OM
13210 A	OSPE32-14300-01050-000000	A800003600	RSM608
13210 M	OSPE32-20400-00160-000000	A8B060ZN	RSM608-O1S
13210FIL	OSPE32-20400-00160-000000	A8ES2310L2K	RSM608-TG
13210FIL	OSPE32-20400-00300-0D0000	A8MC6-MG	RSM6872
13210-QC	OSPE32-20400-00300-0D0000	A8MC8-MG	RSM6872-SRS
13210-QC	OSPE32-20400-00500-000078	A8TCB8	RSM907
13212FIL	OSPE32-20400-00500-000078	A8TMC4	RSM907-C2S
13212FIL	OSPE32-20400-00700-B60000	A8UC8	RSM907-CH
13213FIL	OSPE32-20400-00700-B60000	A914006001	RSM907-GY
13213FIL	OSPE32-20400-01200-000000	A951200200	RSM907-HT
13214FIL	OSPE32-20400-01200-000000	A951200500	RSM907-LT
13214FIL	OSPE32-20400-01250-000000	A951300101	RSM907-O1S
13215FIL	OSPE32-20400-01250-000000	A951500100	RSM907-O1SGY
13215FIL	OSPE32-20400-01350-000000	A952100400	RSM907-O2S
13216FIL	OSPE32-20400-01350-000000	A952100500	RSM907-OHP
13216FIL	OSPE32-20403-00200-000000	A952500401	RSM907-OM
13217FIL	OSPE32-20403-00200-000000	A960834500	RSW407
13217FIL	OSPE32-20403-00400-B60000	AA06TF	RSW4075
13219FIL	OSPE32-20403-00400-B60000	AA09TF	RSW407-CM
13219FIL	OSPE32-20403-00500-B60000	AA13	RSW407-CMVD
13220FIL	OSPE32-20403-00500-B60000	AA13S_01	RSW407-CMW/O
13220FIL	OSPE32-20403-01100-B00000	AA13S_03	RSW407-O1S
13222FIL	OSPE32-20403-01100-B00000	AA26SF	RSW408
13222FIL	OSPE32-20403-01100-B60000	AB.1163.40	RSW408-GY
13225FIL	OSPE32-20403-01100-B60000	AB.1380.10	RSW4872
13225FIL	OSPE32-30400-00260-000000	AB.1380.40	RSW4872-C1S
132291-0000	OSPE32-30400-00260-000000	AB.1381.10	RSW607
132293-0000	OSPE32-30400-00470-000000	AB.1381.40	RSW607-CM
1324FIL	OSPE32-30400-00470-000000	AB.6821000.UC	RSW607-CMVD
1324FIL	OSPE32-40500-00050-000000	AB.6821001.AA	RSW607-CMW/O
13251-01300	OSPE32-40500-00050-000000	AB.6821001.UC	RSW607-O1S
13251-01300	OSPE32-40500-00100-000000	AB.6821201.UC	RSW607-OM
13251-01750	OSPE32-40500-00100-000000	AB.6821301.UC	RSW607-OMVO
13251-01750	OSPE32-40500-00110-000000	AB.6821701.UC	RSW607-OMVOVD
1325FIL	OSPE32-40500-00110-000000	AB.683102.UC	RSW607-OMVOW/O
1325FIL	OSPE32-40500-00120-000000	AB.685121.UC	RSW608
1325-QC	OSPE32-40500-00120-000000	AB.685131.UC	RSW6872
1326FIL	OSPE32-40500-00150-000000	AB.685171.UC	RSW6872-OM
1326FIL	OSPE32-40500-00150-000000	AB.686121.UC	RSW807
13279FIL	OSPE32-40500-00200-0T00K0	AB.686131.UC	RSW807-C1S

13279FIL	OSPE32-40500-00200-0T00K0	AB.686171.UC	RSW807-CM
1327FIL	OSPE32-40500-00500-000000	AB.687121.UC	RSW807-CMVD
1327FIL	OSPE32-40500-00500-000000	AB.687131.UC	RSW807-CMW/O
13280FIL	OSPE32-40503-00350-000000	AB.687171.UC	RSW807-GY
13280FIL	OSPE32-40503-00350-000000	AB.6881000.UC	RSW807-O1S
13284FIL	OSPE32-40700-00080-0T0068	AB.6881001.UC	RSW807-O2S
13284FIL	OSPE32-40700-00080-0T0068	AB.6881201.UC	RSW807-OM
13285FIL	OSPE32-40700-00140-000000	AB.6881301.UC	RSW807-OMW/O
13285FIL	OSPE32-40700-00140-000000	AB.68910	RSW808-TG
1328FIL	OSPE32-40700-00450-000000	AB.68918	RSW8872
1328FIL	OSPE32-40700-00450-000000	AB.98210000.UC	RSW8872-O1S
1329FIL	OSPE32-40700-00500-000000	AB.98210010.AA	RSWB4400
1329FIL	OSPE32-40700-00500-000000	AB.98210010.UC	RSWO2200
132F43	OSPE32-4070A200500-000113	AB.98212010.UC	RSWO4400
132F43	OSPE32-4070A200500-000113	AB.98213010.UC	RSWO6600
132F43-2995	OSPE32-50002-00450-B00000	AB.98217010.UC	RSWO8800
132F43-2995	OSPE32-50002-00450-B00000	AB.98410201.UC	RT02S
132F43-2995-481865C2	OSPE32-50002-00800-B00000	AB.98412201.UC	RT02S_12
132F43-2995-481865C2	OSPE32-50002-00800-B00000	AB.98810010.UC	RT02S_95
132F44	OSPE32-50002-00800-BC2000	AB.98812010.UC	RT02S_96
132F44	OSPE32-50002-00800-BC2000	AB.98813010.UC	RT02SET
132K03	OSPE32-50002-01000-B00000	AB.98817010.UC	RT10001
132K03	OSPE32-50002-01000-B00000	AB08-C2-FK00	RU101S10C
132K03-2995-481865C2	OSPE32-50002-03000-B00000	AB08-C2-FK00	RU101S30C
132K03-2995-481865C2	OSPE32-50002-03000-B00000	AB08-C2-FS00	RUBAN PTFE
132K03-4270-481000C2	OSPE32-50002-05500-B00000	AB08-C2-FS00	RV01A1B100
132K03-4270-481000C2	OSPE32-50002-05500-B00000	AB116310	RV01A1B100
132K04	OSPE32-50004-00500-B00000	AB18-C4-FG00	RV01A1N150
132K04	OSPE32-50004-00500-B00000	AB18-C4-FG00	RV01A1N150
132K04-2995-4818653D	OSPE32-50006-00200-B00000	AB1-SR6	RVA1208A
132K04-2995-4818653D	OSPE32-50006-00200-B00000	AB1-SR6	RVE08
132K04-2995-481865C2	OSPE32-50006-00400-B00000	AB28-T3-FG00	RVF22L0.2B000997668
132K04-2995-481865C2	OSPE32-50006-00400-B00000	AB28-T3-FG00	RVFS-1-MO
132K06	OSPE32-50006-00800-B00000	AB68110	RVFS-3-AO
132K06	OSPE32-50006-00800-B00000	AB68118	RVFS-3-MO
132K06-2995-481865C2	OSPE32-50007-00800-000000	AB683101	RVP130.2BCF
132K06-2995-481865C2	OSPE32-50007-00800-000000	AB685101	RVP130.2BVITCF
132T0304	OSPE32-50007-03400-B00000	AB686101	RVP130.5B71
132T0304	OSPE32-50007-03400-B00000	AB687101	RVP130.5BCF
132T0304-4270-481000C4	OSPE32-5003X-01000-0A3000	AB68X101	RVP130.5BVIFED71CF
132T0304-4270-481000C4	OSPE32-5003X-01000-0A3000	AB68Y101	RVP130.5BVITCF
132T0304-4538	OSPE32-51007-01850-000000	AB68Z101	RVP130.5BVITLUFTCF
132T0304-4538	OSPE32-51007-01850-000000	AB728S24	RVP132BCF
132T0304-4538-4810006J	OSPE32-52209-00850-B0C000	AB728S24	RVP132BVITCF
132T0304-4538-4810006J	OSPE32-52209-00850-B0C000	AB98210001	RVP133BCF
132T2301	OSPE32-52309-00850-B0C000	AB98210011	RVP133BVITCF
132T2301	OSPE32-52309-00850-B0C000	AB98210021	RVP135BCF
132T2301-2995-4818653D	OSPE32-60002-00350-000000	AB98212001	RVP1371
132T2301-2995-4818653D	OSPE32-60002-00350-000000	AB98212011	RVP13CF
132T2301-4538-4810003D	OSPE32-60002-00410-000000	AB98212021	RVP13VITCF
132T2301-4538-4810003D	OSPE32-60002-00410-000000	AB98213001	RVP16
132T2301-4538-4810004K	OSPE32-60002-00500-000000	AB98213011	RVP160.2B71
132T2301-4538-4810004K	OSPE32-60002-00500-000000	AB98213021	RVP160.5BCF

132T23-2995-481865A2	OSPE32-60002-00500-0C2000	AB98217001	RVP162BCF
132T23-2995-481865A2	OSPE32-60002-00500-0C2000	AB98217011	RVP163BCF
132T23-4270-486265C2	OSPE32-60002-00550-000000	AB98217021	RVP163BVITCF
132T23-4270-486265C2	OSPE32-60002-00550-000000	AB98410101	RVP164BCF
132T29-2995-481865C2	OSPE32-60002-00600-000000	AB98412101	RVP1671
132T29-2995-481865C2	OSPE32-60002-00600-000000	AB98413101	RVP16CF
13319FIL	OSPE32-60002-00650-000000	AB98417101	RVP200.2BCF
13319FIL	OSPE32-60002-00650-000000	AB98610101	RVP200.5BCF
13330FIL	OSPE32-60002-00950-000000	AB98612101	RVP200.5BVITCF
13330FIL	OSPE32-60002-00950-000000	AB98613101	RVP202BVITCF
13335FIL	OSPE32-60002-01060-000000	AB98617101	RVP203BCF
13335FIL	OSPE32-60002-01060-000000	AB98810001	RVP205BCF
1333FIL	OSPE32-60002-01200-000000	AB98810011	RVP206BCF
1333FIL	OSPE32-60002-01200-000000	AB98810021	RVP2071
13348-8-6	OSPE32-60002-01300-000000	AB98812001	RVP20CF
1335FIL	OSPE32-60002-01300-000000	AB98812011	RVP20VITCF
1335FIL	OSPE32-60002-01350-000000	AB98812021	RVP240.2BCF
133F5408-2995	OSPE32-60002-01350-000000	AB98813001	RVP240.2BVITCF
133F5408-2995	OSPE32-60002-01700-000000	AB98813011	RVP240.5BCF
133F5408-2995-483510S6	OSPE32-60002-01700-000000	AB98813021	RVP241.5BCF
133F5408-2995-483510S6	OSPE32-60002-01980-000000	AB98817001	RVP243BCF
133T21	OSPE32-60002-01980-000000	AB98817011	RVP24CF
133T21	OSPE32-60002-02000-000000	ABL1G114QXWL3	RVP24VITCF
133T21-2995-481865C2	OSPE32-60002-02000-000000	ABL1G114QXWL3S01	RVP270.2BCF
133T21-2995-481865C2	OSPE32-60002-02050-000000	ABL2G114QXWL13V	RVP270.5BCF
133T21-2995-495870C2	OSPE32-60002-02050-000000	ABL2U112QXWL13V	RVP270.5BVITCF
133T21-2995-495870C2	OSPE32-60002-02060-000A18	ABRAPL10-8/10	RVP273BCF
133T21-4270-481000C2	OSPE32-60002-02060-000A18	ABRAPL6-4/6	RVP2771
133T21-4270-481000C2	OSPE32-60002-02450-000000	AC09TF	RVP27CF
133T23	OSPE32-60002-02450-000000	AC13	RVP350.2BCF
133T23	OSPE32-60002-02700-PA8000	AC21SF	RVP350.2BVITCF
133T2301	OSPE32-60002-02700-PA8000	AC26SF	RVP350.5BCF
133T2301	OSPE32-60002-04200-000000	AC-2SS	RVP352BCF
133T2301-2995-481865C2	OSPE32-60002-04200-000000	AC-2SS	RVP3571
133T2301-2995-481865C2	OSPE32-60004-00210-000000	A-C3S150V4F10I10T10M00	RVP35CF
133T23-2995-481865C2	OSPE32-60004-00210-000000	A-C3S300V4F10I10T10M00	RVP35VITCF
133T23-2995-481865C2	OSPE32-60004-00250-000000	AC-4SS	RVP400.2BVITCF
133T23-2995-495870C2	OSPE32-60004-00250-000000	AC-4SS	RVP400.5BCF
133T23-2995-495870C2	OSPE32-60004-01350-000000	ACC6NB004	RVP402BCF
133T23-492190C2	OSPE32-60004-01350-000000	ACC6NC003	RVP403BCF
133T23-492190C2	OSPE32-60004-01712-000000	ACC6ND000	RVP40CF
133V5306	OSPE32-60004-01712-000000	ACC6ND001	RVP473BCF
133V5306	OSPE32-60004-01800-000000	ACC6ND002	RVP47CF
133V5306-2995-481865C2	OSPE32-60004-01800-000000	ACC6NE000	RVP552BCF
133V5306-2995-481865C2	OSPE32-60004-02000-000000	ACC6NE001	RVP55CF
133V5363	OSPE32-60004-02000-000000	ACC6NE002	RVSAE3/6-21-0
133V5363	OSPE32-60004-05250-000000	ACC6NE003	RX120LR1000
133V5363-2995-4818653D	OSPE32-60004-05250-000000	ACC6NE005	RX120LR1100
133V5363-2995-4818653D	OSPE32-60008-00830-004A00	ACC6NE006	RX120LR1141
133V5363-2995-481865C2	OSPE32-60008-00830-004A00	ACC6NE009	RX120LR1150
133V5363-2995-481865C2	OSPE32-60008-00830-00AA00	ACC6NE013	RX120LR1200
133V5406	OSPE32-60008-00830-00AA00	ACC6NE014	RX120LR1207
133V5406	OSPE32-60008-00830-00DA00	ACC6NE015	RX120LR1300

133V5406-2995-481865C2	OSPE32-60008-00830-00DA00	ACC6NE021	RX120LR1307
133V5406-2995-481865C2	OSPE32-60008-00900-004000	ACC6NE023	RX130HR1000
133V5406-2995-482725C2	OSPE32-60008-00900-004000	ACC6NE024	RX130HR1004
133V5406-2995-482725C2	OSPE32-60008-00900-00AA00	ACC6NF000	RX130HR1014
133V5406-4270-4810003D	OSPE32-60008-00900-00AA00	ACC6NH003	RX130HR1024
133V5406-4270-4810003D	OSPE32-60008-01300-00A000	ACC6NJ000	RX130HR1051
133V5406-492190C2	OSPE32-60008-01300-00A000	ACC6NJ001	RX130HR1052
133V5406-492190C2	OSPE32-60008-01350-003090	ACC6NK000	RX130HR1100
133V5463	OSPE32-60008-01350-003090	ACC6NK001	RX130HR1101
133V5463	OSPE32-60008-01600-P07000	ACC6NK002	RX130HR1114
133V5463-495905C2	OSPE32-60008-01600-P07000	ACC6NK003	RX130HR1134
133V5463-495905C2	OSPE32-60008-01600-P07070	ACC6NK004	RX130HR1138
133X01	OSPE32-60008-01600-P07070	ACC6NK005	RX130HR1152
133X01	OSPE32-60008-01600-P070C0	ACC6NN005	RX130HR1153
133X01-496700C2	OSPE32-60008-01600-P070C0	ACC6NN014	RX130HR1200
133X01-496700C2	OSPE32-60008-01825-007000	ACC6NN017	RX130HR1300
13410 MN	OSPE32-60008-01825-007000	ACC6NN018	RX130HR1326
13410 MNV	OSPE32-60008-03150-007000	ACC6NN019	RX130KR1024
13410 MNV	OSPE32-60008-03150-007000	ACC6NN027	RX130KR1215
13410 S	OSPE32-60009-00800-003000	ACC6NN029EUR	RX320ER1000
13410 STNV	OSPE32-60009-00800-003000	ACC6NN029UK	RX320ER1023
13411 M	OSPE32-60009-00850-003000	ACC6NN030	RX320ER1028
1342FIL	OSPE32-60009-00850-003000	ACC6NN031	RX320ER1049
1342FIL	OSPE32-60009-00900-003000	ACC6NN033	RX320ER1050
1343FIL	OSPE32-60009-00900-003000	ACC6NN034	RX320ER1056
1343FIL	OSPE32-60009-01200-003000	ACC6NN037	RX320ER1100
1344FIL	OSPE32-60009-01200-003000	ACC6NN039	RX320ER1105
1344FIL	OSPE32-60009-01296-003060	ACC6NN044	RX320ER1151
13454FIL	OSPE32-60009-01296-003060	ACC6NN047	RX320ER1215
13454FIL	OSPE32-60009-01396-003060	ACC6NV001	RX320ER1300
1345FIL	OSPE32-60009-01396-003060	ACC6NW001	RX320ER1302
1345FIL	OSPE32-60009-01500-007000	ACC6NW002	RX320ER1309
1346FIL	OSPE32-60009-01500-007000	ACC6NW003	RX330AR1000
1346FIL	OSPE32-60009-01515-P03000	ACG0060-4/01-3	RX330AR1100
1347FIL	OSPE32-60009-01515-P03000	ACG0090-4/01-3	RX330AR1200
1347FIL	OSPE32-60009-01745-P03A00	ACG0170-4/01-3	RX330AR1300
1348FIL	OSPE32-60009-01745-P03A00	ACG0190-4/01-3	RX330AR1314
1348FIL	OSPE32-60009-01745-P07000	ACL189-01SNP	RX330CR1052
1349FIL	OSPE32-60009-01745-P07000	ACL40	RX330CR1100
1349FIL	OSPE32-60009-01825-007000	ACL60	RX330CR1324
134G02C	OSPE32-60009-01825-007000	ACL90	RX330ZR1120
134G02C	OSPE32-60009-02050-003A00	ACL90-155	RX520KR1000
135-000400	OSPE32-60009-02050-003A00	ACM HIRE	RX520KR1400
135-000500	OSPE32-60009-02050-P03A00	ACM202024EUR	RX520KR1500
135-000600	OSPE32-60009-02050-P03A00	ACM202032EUR	RX520KR3200
13508FIL	OSPE32-60009-02456-003000	ACM202032UK	RX530FR1000
13508FIL	OSPE32-60009-02456-003000	ACM2N0010-4/0-3	RX530FR1018
13509FIL	OSPE32-60009-02456-P07000	ACM2N0010-4/0-3-PLK-00.3	RX530FR1025
13509FIL	OSPE32-60009-02456-P07000	ACM2N0012-6/Y-3-GC05	RX530FR1100
13510FIL	OSPE32-60009-02500-002000	ACM2N0012-6/Y-3-GP60	RX530FR1110
13510FIL	OSPE32-60009-02500-002000	ACM2N0030-4/0-3	RX530FR1300
13517-01900	OSPE32-60009-02500-007000	ACM2N0030-4/0-3-GPS05	RX530FR1400
13517-01900	OSPE32-60009-02500-007000	ACM2N0030-4/0-3-GW	RX530FR1500

13518-00130	OSPE32-60009-02610-007000	ACM2N0045-4/0-3	RX530FR1501
13518-00130	OSPE32-60009-02610-007000	ACM2N0045-4/0-3-BG	RX530FR1700
1351FIL	OSPE32-60009-02726-003090	ACM2N0045-4/0-3-BR	RX620JR1000
1351FIL	OSPE32-60009-02726-003090	ACM2N0045-4/0-3-GW	RX620JR1110
135-201050	OSPE32-60009-02730-007000	ACM2N0045-4/0-3-W6	RX620JR1702
135-201051	OSPE32-60009-02730-007000	ACM2N0045-4/0-6	RX630ER1000
135-201053	OSPE32-6000B-01200-000000	ACM2N0045-4/0-6-BG	RX630ER1500
135-201054	OSPE32-6000B-01200-000000	ACM2N0055-4/1-3	S.250002
135-201055	OSPE32-6001X-00900-0A4000	ACM2N0070-4/0-3	S.250003
1353FIL	OSPE32-6001X-00900-0A4000	ACM2N0070-4/0-3-65	S.250004
1353FIL	OSPE32-6006X-01520-0A3000	ACM2N0070-4/0-3-BG	S.250016
1355FIL	OSPE32-6006X-01520-0A3000	ACM2N0070-4/0-3-GW	S.250018
1355FIL	OSPE32-60104-01350-000000	ACM2N0070-4/0-6	S.340002
135-600110	OSPE32-60104-01350-000000	ACM2N0070-4/0-6-BR	S.340060
135-600113	OSPE32-60104-01712-000000	ACM2N0070-4/0-6-GW	S.340071
135-600150	OSPE32-60104-01712-000000	ACM2N0090-4/1-3	S.340092
135-600222	OSPE32-6010B-01200-000000	ACM2N0090-4/1-3-BG	S.340098
135-600231	OSPE32-6010B-01200-000000	ACM2N0090-4/1-3-BR	S.340135
135-600233	OSPE32-61002-01600-000000	ACM2N0090-4/1-3-D6	S.340148
135-600239	OSPE32-61002-01600-000000	ACM2N0090-4/1-3-GW	S.340150
135-600240	OSPE32-61002-01900-000000	ACM2N0090-4/1-6	S.340151
135-600252	OSPE32-61002-01900-000000	ACM2N0130-4/0-3	S.340155
13563FIL	OSPE32-61002-02550-000000	ACM2N0130-4/0-3-GW	S.340158
13563FIL	OSPE32-61002-02550-000000	ACM2N0130-4/0-6	S.340161
1356FIL	OSPE32-61002-04000-000000	ACM2N0130-4/0-6-GW	S.340164
1356FIL	OSPE32-61002-04000-000000	ACM2N0150-4/1-3	S.340174
1356FIL	OSPE32-61008-01296-003A00	ACM2N0150-4/1-3-65	S.340177
1356FIL	OSPE32-61008-01296-003A00	ACM2N0150-4/1-3-BG	S.340181
135-700001	OSPE32-61008-01600-0070C0	ACM2N0150-4/1-3-BR	S.340182
135-700002	OSPE32-61008-01600-0070C0	ACM2N0150-4/1-3-GW	S.340183
135-700003	OSPE32-61008-01600-P070C0	ACM2N0150-4/1-6	S.340190
135-702030	OSPE32-61008-01600-P070C0	ACM2N0150-4/1-6-BR	S.340201
135-702031	OSPE32-61008-02041-003A30	ACM2N0150-4/1-6-GW	S.340210
135-702032	OSPE32-61008-02041-003A30	ACM2N0220-4/1-3	S.340227
135-702042	OSPE32-61008-02041-P07000	ACM2N0220-4/1-3-BR	S.340234
135-703000	OSPE32-61008-02041-P07000	ACM2N0220-4/1-3-GW	S.340236
135-703001	OSPE32-61008-02346-003A30	ACM2N0220-4/1-6	S.340238
135-703002	OSPE32-61008-02346-003A30	ACM2N0220-4/1-6-BR	S.340239
135-703017	OSPE32-6220B-02106-P00000	ACM2N0220-4/1-6-GW	S.340249
135-703019	OSPE32-6220B-02106-P00000	ACM2N0290-4/1-3	S.340330
135-703030	OSPE50-00000-00324-B60000	ACM2N0290-4/1-6	S.360001
135-704000	OSPE50-00000-00324-B60000	ACM2N0290-4/1-6-BR	S.380003
135-704002	OSPE50-00000-00400-000000	ACM2N0290-4/1-6-GW	S.380019
135-719000	OSPE50-00000-00400-000000	ACM2N0320-4/2-3	S.380022
135-719010	OSPE50-00000-00620-000000	ACM2N0320-4/2-3-BR	S.390003
135-719021	OSPE50-00000-00620-000000	ACM2N0320-4/2-6	S.390004
135-719022	OSPE50-00000-00700-0D0000	ACM2N0320-4/2-6-65	S.420044
135-719023	OSPE50-00000-00700-0D0000	ACM2N0320-4/2-6-BG	S.420058
135-719100	OSPE50-00000-00820-060000	ACM2N0320-4/2-6-BR	S.450046
135-719600	OSPE50-00000-00820-060000	ACM2N0320-4/2-6-GW	S.580044
135-720160	OSPE50-00000-00900-0H0000	ACM2N0430-0/1-3	S.580057
135-721031	OSPE50-00000-00900-0H0000	ACM2N0480-4/2-3	S.580060
135-721043	OSPE50-00000-00924-B60000	ACM2N0480-4/2-3-GW	S.610031

135-725390	OSPE50-00000-00924-B60000	ACM2N0480-4/2-6	S.610042
135-725400	OSPE50-00000-01000-000000	ACM2N0480-4/2-6-BG	S.620021
135-725403	OSPE50-00000-01000-000000	ACM2N0480-4/2-6-BR	S.680002
135-725406	OSPE50-00000-01050-000000	ACM2N0480-4/2-6-GW	S.680006
135-725422	OSPE50-00000-01050-000000	ACM2N0650-4/2-3-GW	S.680009
135-725431	OSPE50-00000-01100-000000	ACM2N0650-4/2-6	S.680016
135-725465	OSPE50-00000-01100-000000	ACM2N0650-4/2-6-BI	S.680019
135-725649	OSPE50-00000-01200-000000	ACM2N0650-4/2-6-BR	S.680020
135-725670	OSPE50-00000-01200-000000	ACM2N0650-4/2-6-GW	S.680029
135-725750	OSPE50-00000-01200-060000	ACM2N0650-4/2-6-PLK40	S.680044
135-725800	OSPE50-00000-01200-060000	ACM2N0830-4/2-6	S.680057
135-728710	OSPE50-00000-01324-B60000	ACM2N0960-4/3-6	S.680058
135-728715	OSPE50-00000-01324-B60000	ACM2N1200-4/3-6	S.680106
135-730032	OSPE50-00000-01578-000000	ACM2N1200-4/3-6-BBR	S.690019
135-730046	OSPE50-00000-01578-000000	ACM2N1200-4/3-6-GW	S.690031
135-730220	OSPE50-00000-01629-000000	ACM2N1200-4/3-6-PLK40	S.690035
135-730265	OSPE50-00000-01629-000000	ACM2N2000-4/3-6	S.690039
1359FIL	OSPE50-00000-01630-000100	ACM2N2000-4/3-6-BBR	S.690064
1359FIL	OSPE50-00000-01630-000100	ACM2N2000-4/3-6-GW	S.691002
135K03	OSPE50-00000-01700-000000	ACMHM0290-4/1-6	S.692002
135K03	OSPE50-00000-01700-000000	ACMHM0290-4/1-6-GW	S.692004
135K03-4269-4849903P	OSPE50-00000-01724-060000	ACMHM0400-3/2-3-GK6-VOL	S.750001
135K03-4269-4849903P	OSPE50-00000-01724-060000	ACMN0010-4/0-3	S.750002
135K03-4269-484990P0	OSPE50-00000-01882-000000	ACMN0030-4/0-3-GW	S.750023
135K03-4269-484990P0	OSPE50-00000-01882-000000	ACMN0045-4/0-3	S.750029
135K03-4269-485400C2	OSPE50-00000-01963-000000	ACMN0045-4/0-3-GW	S.750032
135K03-4269-485400C2	OSPE50-00000-01963-000000	ACMN0045-4/0-6	S.750033
13612FIL	OSPE50-00000-02002-000000	ACMN0045-4/0-6-BG	S.750035
13612FIL	OSPE50-00000-02002-000000	ACMN0045-4/0-6-BR	S.750074
13622-00700	OSPE50-00000-02055-000000	ACMN0070-4/0-3-GW	S.760005
13622-00700	OSPE50-00000-02055-000000	ACMN0070-4/0-6	S.760007
13622-00900	OSPE50-00000-02205-000000	ACMN0090-4/1-3	S.760008
13622-00900	OSPE50-00000-02205-000000	ACMN0090-4/1-3-GW-S3-EPP	S.822004
13630FIL	OSPE50-00000-02271-000000	ACMN0150-4/1-3	S.822006
13630FIL	OSPE50-00000-02271-000000	ACMN0220-4/1-3	S.840070
13641FIL	OSPE50-00000-02310-000000	ACMN0220-4/1-3-65	S.890008
13641FIL	OSPE50-00000-02310-000000	ACMN0220-4/1-3-BR	S.988004
13656-03000	OSPE50-00000-02400-000000	ACMN0220-4/1-3-GW	S.988010
13656-03000	OSPE50-00000-02400-000000	ACMN0220-4/1-6-P655	S01132
1365FIL	OSPE50-00000-02500-000000	ACMN0320-4/2-3	S01133
1365FIL	OSPE50-00000-02500-000000	ACMN0320-4/2-3-6P	S01306
13665FIL	OSPE50-00000-02700-000000	ACMN0320-4/2-3-T6	S01307
13665FIL	OSPE50-00000-02700-000000	ACMN0480-4/2-6	S01340
13668FIL	OSPE50-00000-03600-000000	ACMN0480-4/2-6-V6	S01394
13668FIL	OSPE50-00000-03600-000000	ACMN0600-1/2-3	S01395
13709FIL	OSPE50-00000-03600-0H0000	ACMN0960-4/3-6-BG	S01546
13709FIL	OSPE50-00000-03600-0H0000	ACMN0960-4/3-6-GW	S01547
13713FIL	OSPE50-00000-05000-000000	ACO10528	S01970
13713FIL	OSPE50-00000-05000-000000	ACP04EA016R2KRA	S02025
13715-00300	OSPE50-00000-06100-000000	ACP04EA050R2KRA	S02030
13715-00300	OSPE50-00000-06100-000000	ACP05EA050E189K	S02031
13715-00400	OSPE50-00000-08200-000000	ACP05EA050E2K	S02044
13715-00400	OSPE50-00000-08200-000000	ACP10EA150E190H	S02045

13719FIL	OSPE50-0000C101425-061048	ACP10EA300E1HTD	S02101
13719FIL	OSPE50-0000C101425-061048	ACRL4400-3/4-6	S02102
13721FIL	OSPE50-0000C101700-0R0114	ACT1550315MEMA2	S02103
13721FIL	OSPE50-0000C101700-0R0114	ACX05ED032E131H	S02119
13724FIL	OSPE50-0000C102150-060078	AD00ASB-1311	S02120
13724FIL	OSPE50-0000C102150-060078	AD05	S02121
13726-12-12-SM	OSPE50-0003A301200-000000	AD06-1025	S02122
1372FIL	OSPE50-0003A301200-000000	AD06-1026	S02123
1372FIL	OSPE50-0004A100720-000000	AD06-1027	S02124
13743-10-10-SM	OSPE50-0004A100720-000000	AD06-650	S02373
13743-12-10-SM	OSPE50-00100-00410-000000	AD10	S02375
13743-12-12-SM	OSPE50-00100-00410-000000	AD10-399	S02502
13743-16-12-SM	OSPE50-00100-00570-000000	AD10-956	S02504
13743-16-16-SM	OSPE50-00100-00570-000000	AD13	S02594
13743-6-6-SM	OSPE50-00100-00650-000000	AD17	S02595
13743-8-8-SM	OSPE50-00100-00650-000000	AD21	S02596
13746-12-10	OSPE50-00100-00800-0I0000	AD26	S02597
13746-12-12	OSPE50-00100-00800-0I0000	AD33	S02608
13746-12-16	OSPE50-00100-00820-000000	ADA-G1F-M5F	S02610
13746-14-12	OSPE50-00100-00820-000000	ADA-G1F-M5F	S02651
13746-16-12	OSPE50-00100-01200-000000	ADA-G1F-M6F	S02657
13746-16-16	OSPE50-00100-01200-000000	ADA-G1F-M6F	S02658
13746-20-16	OSPE50-00100-01500-061000	ADA-G1M-M5F	S02659
13746-20-20	OSPE50-00100-01500-061000	ADA-G1M-M5F	S02710
13746-6-4	OSPE50-00100-01590-000000	ADA-G1M-M6F	S02731
13746-6-5	OSPE50-00100-01590-000000	ADA-G1M-M6F	S02735
13746-6-6	OSPE50-00100-01720-0H0000	ADA-G2F-M6F	S03493
13748-12-10	OSPE50-00100-01720-0H0000	ADA-G2F-M6F	S03494
13748-12-12	OSPE50-00100-02100-0I0000	ADA-G2F-M8F	S03520
13748-12-12C	OSPE50-00100-02100-0I0000	ADA-G2F-M8F	S03534
13748-12-16	OSPE50-00100-02180-000000	ADA-G2M-M6F	S03536
13748-14-12	OSPE50-00100-02180-000000	ADA-G2M-M6F	S03537
13748-16-12	OSPE50-00100-02192-000000	ADAPDIGIPOS/638B	S03543
13748-16-16	OSPE50-00100-02192-000000	ADAPKX10/KL	S03617
13748-20-16	OSPE50-00100-02720-0H1000	ADAPTOR ABLG114FP	S04020
13748-20-20	OSPE50-00100-02720-0H1000	ADAPTOR ABLG114SNG	S04145
13748-24-24	OSPE50-00100-02880-000000	ADAPX4//INKR-DB9-S	S04153
13748-6-4	OSPE50-00100-02880-000000	ADCH-12	S04155
13748-6-5	OSPE50-00100-03000-060000	ADCH-16	S04174
13748-6-6	OSPE50-00100-03000-060000	ADCH-20	S04176
13748-6-6C	OSPE50-00100-04600-0I0000	ADCH-24	S04230
1374FIL	OSPE50-00100-04600-0I0000	ADCH-32	S04233
1374FIL	OSPE50-02000-01220-000000	ADCH-4	S04347
13755-10-8	OSPE50-02000-01220-000000	ADCH-6	S04350
13755-12-12	OSPE50-02000-01700-000000	ADCH-8	S04351
13755-4-3	OSPE50-02000-01700-000000	ADE007-25R1A2	S04352
13755-4-4	OSPE50-02000-01900-000000	ADE007-25R9A2	S04353
13755-6-5	OSPE50-02000-01900-000000	ADE016-25R1A2	S04354
13755-6-6	OSPE50-02000-02200-000000	ADE016-25R9A2	S04355
13755-8-6	OSPE50-02000-02200-000000	ADE032-21R1A2	S04382
13755-8-8	OSPE50-02100-01450-000040	ADE032-21R9A2	S04394
13755FIL	OSPE50-02100-01450-000040	ADE050-21R1A2	S04415
13755FIL	OSPE50-02100-01720-000000	ADE075-21R1A2	S04422

13756-6-4	OSPE50-02100-01720-000000	ADE075-21R9A2	S04429
13756-8-8	OSPE50-02100-01730-000000	ADE100-21R1A2	S04430
1375FIL	OSPE50-02100-01730-000000	ADE100-21R9A2	S04437
1375FIL	OSPE50-10300-00450-060000	ADE140-14R1C2	S04438
1375FIL	OSPE50-10300-00450-060000	ADE140-14R9C2	S04445
1375FIL	OSPE50-10300-01130-0R0074	ADE140-25R1C2	S04446
1376FIL	OSPE50-10300-01130-0R0074	ADE140-25R9C2	S04447
1376FIL	OSPE50-10300-01250-0D0000	ADE200-25R1C2	S04448
13770-10-10-SM	OSPE50-10300-01250-0D0000	ADE280-25R1C2	S04450
13770-10-8-SM	OSPE50-10300-01300-AD0000	ADE350-25R1C2	S04458
13770-12-10-SM	OSPE50-10300-01300-AD0000	ADP-SLVDN	S04459
13770-12-12-SM	OSPE50-10300-01550-000000	ADPX	S04461
13770-16-12-SM	OSPE50-10300-01550-000000	ADSH102CD024HD-C3E	S04462
13770-16-16-SM	OSPE50-10300-02060-000190	AD-VS02	S04463
13770-6-6-SM	OSPE50-10300-02060-000190	AEDRV6/100-G24	S04464
13770-8-10-SM	OSPE50-10303-00800-000000	AEGCTM12X	S04466
13770-8-8-SM	OSPE50-10303-00800-000000	AEGCTM16X	S04468
13771-20-16-SM	OSPE50-1030AJ01000-000000	AEGCTM16XX	S04478
13771-20-20-SM	OSPE50-1030AJ01000-000000	AEGCTM16XX-2	S04479
13771-24-24-SM	OSPE50-10400-00050-000000	AEGCTM-2	S04490
13771-6-6-SM	OSPE50-10400-00050-000000	AEGCTM-2-220/60	S04492
13773-12-12-SM	OSPE50-10400-00150-000000	AEGCTM-2E-CEG	S04499
13773-16-16-SM	OSPE50-10400-00150-000000	AEGCTM-2EWOH-CE	S04505
13773-20-16-SM	OSPE50-10400-00250-000000	AEGCTM-2G	S04511
13773-20-20-SM	OSPE50-10400-00250-000000	AEGCTM-2WOH	S04513
13773-24-24-SM	OSPE50-10400-00250-200000	AEGCTM4	S04514
13773-32-32-SM	OSPE50-10400-00250-200000	AEGCTM4D	S04516
13777-10-10	OSPE50-10400-00300-000000	AEGCTM4X	S04519
13777-12-10	OSPE50-10400-00300-000000	AEGCTM5	S04523
13777-12-12	OSPE50-10400-00300-060008	AEGCTM5-2	S04525
13777-16-16	OSPE50-10400-00300-060008	AEGCTM5D	S04529
13777-20-20	OSPE50-10400-00300-200000	AEGCTM6	S04531
13777-8-8	OSPE50-10400-00300-200000	AEGCTM6X	S04540
13778-12-12-SM	OSPE50-10400-00350-000000	AEGCTM9	S04548
13778-16-16	OSPE50-10400-00350-000000	AEGCTM940	S04LLCFX
13778-20-20-SM	OSPE50-10400-00350-200000	AEGCTM9X	S0600
13778-24-24	OSPE50-10400-00350-200000	AEGCTM9XX	S06LCFX
1377FIL	OSPE50-10400-00400-000000	AEGCTM9XX-2	S06LL71X
1377FIL	OSPE50-10400-00400-000000	AEGCTM-UP2	S06LLCFX
13791N-10-10	OSPE50-10400-00450-200000	AEGCTM-UP2H	S06M35S4N
13791N-5-5	OSPE50-10400-00450-200000	AF M408512	S08.5LCFX
13795-00300	OSPE50-10400-00500-060000	AF M8040	S0800
13795-00300	OSPE50-10400-00500-060000	AF M8060	S08LCFX
13795-00400	OSPE50-10400-00600-0D0000	AF040	S08LL71X
13795-00400	OSPE50-10400-00600-0D0000	AF040	S08LLCFX
1379FIL	OSPE50-10400-00600-0D0008	AF100	S1000
1379FIL	OSPE50-10400-00600-0D0008	AF100	S1040
137PX-10-08	OSPE50-10400-00600-0H0068	AF13	S10L71X
137PX-5-04	OSPE50-10400-00600-0H0068	AF26SF	S10LCA120
137PX-8-06	OSPE50-10400-00800-000000	AF28-T3-SL00	S10LCFX
137YX-8-06	OSPE50-10400-00800-000000	AF28-T3-SL00	S10LDA120
1380.28.P	OSPE50-10400-00900-000000	AF28-T6-SL00	S10LDA240
13835FIL	OSPE50-10400-00900-000000	AF28-T6-SL00	S10LDD012

13835FIL	OSPE50-10400-01000-010000	AF3RAB10-1/4	S10LDD024
13837FIL	OSPE50-10400-01000-010000	AF3RAB10-3/8	S10LDD120
13837FIL	OSPE50-10400-01000-0D0000	AF3RAB8-1/4	S10LJD012
13853-02050	OSPE50-10400-01000-0D0000	AFAP400	S10LJD024
13853-02050	OSPE50-10400-01050-000000	AFC106-M	S10LWD012
13857FIL	OSPE50-10400-01050-000000	AFC405-M	S10LWD024
13857FIL	OSPE50-10400-01100-0D0000	A-FGI09-075	S10M17S1UN
13858FIL	OSPE50-10400-01100-0D0000	AFHP92	S10M35A1UV
13858FIL	OSPE50-10400-01200-0D0000	AFSB05	S10PM
13859FIL	OSPE50-10400-01200-0D0000	AFSB05	S1200
13859FIL	OSPE50-10400-01350-000000	AFSF4	S12L71X
13860FIL	OSPE50-10400-01350-000000	AG-060	S12LCFX
13860FIL	OSPE50-10400-01400-0D0000	AG-066	S131B040R000
13861FIL	OSPE50-10400-01400-0D0000	AG-072	S131B040RB00
13861FIL	OSPE50-10403-01200-0D0000	AG-084	S131B140R000
13863FIL	OSPE50-10403-01200-0D0000	AG-097	S13-41805-0K
13863FIL	OSPE50-1040AJ00445-000120	AG-106	S13-41806-0K
13871FIL	OSPE50-1040AJ00445-000120	AG-113	S13-42308-0K
13871FIL	OSPE50-1040AJ00645-000120	AG-122	S13-42403-0K
13872FIL	OSPE50-1040AJ00645-000120	AG-131	S13-43334-0K
13872FIL	OSPE50-10500-00230-060000	AG-155	S13-43655-0K
1388FIL	OSPE50-10500-00230-060000	AG-166	S13-43965-0K
1388FIL	OSPE50-10500-00350-000000	AG-182	S13-43968-0K
13891FIL	OSPE50-10500-00350-000000	AG-209	S13-43969-0K
13891FIL	OSPE50-10500-00500-000000	AG-220	S13-43970-0K
13892FIL	OSPE50-10500-00500-000000	AG-232	S13-44302-0K
13892FIL	OSPE50-10500-00530-000000	AG-292	S13-45544-0K
13926-10-10	OSPE50-10500-00530-000000	AG-319	S13-46096-0K
13926-12-12-SM	OSPE50-10500-00680-000000	AG4RAB10-1/4	S13-46762-0K
13926-16-16	OSPE50-10500-00680-000000	AG4RAB12-1/2	S13-47511-0K
13926-20-20-SM	OSPE50-10500-00700-B60000	AG4RAB8-1/4	S13-47873-0K
13926-24-24	OSPE50-10500-00700-B60000	AGL40	S14-00128-0
13926-6-6	OSPE50-10500-00800-000000	AGL60	S14-08794-0
13943-10-10C-SM	OSPE50-10500-00800-000000	AGL90	S14-08795-0
13943-10-8-SM	OSPE50-10500-00800-200000	AGL90-155	S14-08796-0
13943-12-12C-SM	OSPE50-10500-00800-200000	AH-025C2	S14-08893-0
13943-12-12-SM	OSPE50-10500-00800-B60000	AH-03C2	S14-08893-5
13943-16-12-SM	OSPE50-10500-00800-B60000	AH-04C2	S14-08976-0
13943-16-16C-SM	OSPE50-10500-00900-0D0000	AH055036U002	S14-08977-0
13943-16-16-SM	OSPE50-10500-00900-0D0000	AH055036U003	S14-09338-0
13943-6-6-SM	OSPE50-10500-00965-020000	AH055036U102	S14-09887-0
13946-12-10	OSPE50-10500-00965-020000	AH055036U103	S14-09944-0
13946-12-12	OSPE50-10500-01000-0R0114	AH057915U003	S14-10785-0
13946-12-16	OSPE50-10500-01000-0R0114	AH-05C2	S14-13611-0
13946-12-8	OSPE50-10500-01050-000000	AH1/8-27PTF	S14-13613-0
13946-14-12	OSPE50-10500-01050-000000	AH10	S14-13615-0
13946-16-12	OSPE50-10500-01170-020000	AH10	S14-14371-0
13946-16-16	OSPE50-10500-01170-020000	AH385457U001	S14-15021-0
13946-20-16	OSPE50-10500-01300-000000	AH385621U001	S14-16200-0
13946-20-20	OSPE50-10500-01300-000000	AH385621U101	S14-18711-0
13946-6-4	OSPE50-10500-01300-0D0000	AH385826U001	S14-18711-5
13946-6-5	OSPE50-10500-01300-0D0000	AH385851U002	S14-18934-0
13946-6-6	OSPE50-10500-01500-000000	AH385851U002-1	S14-19371-0

13946-6-8	OSPE50-10500-01500-000000	AH385851U003-1	S14-19371-5
13947FIL	OSPE50-10500-01700-0D0000	AH385851U005	S14-19372-0
13947FIL	OSPE50-10500-01700-0D0000	AH386001U001	S14-20084-0
13948-12-10	OSPE50-10500-01900-0D0000	AH386025U001	S14-20085-0
13948-12-12	OSPE50-10500-01900-0D0000	AH386025U002	S14-24448-0
13948-12-12C	OSPE50-10500-02474-060000	AH387775U001	S14-24569-0
13948-12-16	OSPE50-10500-02474-060000	AH387775U001-1	S14-24570-0
13948-12-8	OSPE50-11300-02235-000000	AH387775U001-10	S14-25645-0
13948-14-12	OSPE50-11300-02235-000000	AH387775U001-12	S14-25646-0
13948-16-12	OSPE50-11300-02235-100000	AH387775U005	S14-26720-0
13948-16-16	OSPE50-11300-02235-100000	AH387775U012	S14-26721-0
13948-20-16	OSPE50-13500-01100-100000	AH387775U015	S14-27026-0
13948-20-20	OSPE50-13500-01100-100000	AH387775U024	S14-27029-0
13948-24-24	OSPE50-20600-00200-060000	AH389192T001-4	S14-27030-0
13948-6-4	OSPE50-20600-00200-060000	AH389192U001	S14-27034-0
13948-6-5	OSPE50-20600-00200-061000	AH463261U001	S14-27360-0
13948-6-6	OSPE50-20600-00200-061000	AH463889U001	S14-27469-0
13948-6-6C	OSPE50-20600-00350-000000	AH463889U001-4	S14-28136-0
13948-6-8	OSPE50-20600-00350-000000	AH464657T101	S14-28173-0
13955-10-8	OSPE50-20600-00700-000000	AH464657U001	S14-28174-0
13955-10-8-SM	OSPE50-20600-00700-000000	AH464657U001-1	S14-28176-0
13955-12-12	OSPE50-20600-01200-000000	AH464657U101	S14-28178-0
13955-16-16	OSPE50-20600-01200-000000	AH464657U101-1	S14-28181-0
13955-4-3	OSPE50-20600-01500-000000	AH464871T002-3	S14-28182-0
13955-4-3C	OSPE50-20600-01500-000000	AH464871U002	S14-29879-0
13955-4-4	OSPE50-20600-01600-000000	AH464872T003-12	S14-29879-5
13955-5-4	OSPE50-20600-01600-000000	AH464872T004-12	S14-31649-0
13955-6-4	OSPE50-20600-01600-0S0040	AH464872T005-12	S14-31650-0
13955-6-5	OSPE50-20600-01600-0S0040	AH464872T007-12	S14-38653-0
13955-6-6	OSPE50-20604-01600-000000	AH464872T008-12	S14-38653-5
13955-6-6C	OSPE50-20604-01600-000000	AH464872T009-12	S14-38740-0
13955-8-6	OSPE50-30500-00200-000000	AH464872T010-12	S14-38859-0
13955-8-8	OSPE50-30500-00200-000000	AH464872U010	S14-40835-0
13956-4-3	OSPE50-30500-00200-0T00L0	AH464883T101-1	S14-41575-0
13956-4-4	OSPE50-30500-00200-0T00L0	AH464883U101	S14-42336-5
13956-6-4	OSPE50-30500-00250-000000	AH464915T001-4	S14-42477-0
13956-6-5	OSPE50-30500-00250-000000	AH464915T101-4	S14-42502-0
13956-6-6	OSPE50-30500-00400-0T00L0	AH464915U001	S14-42503-0
13956-8-6	OSPE50-30500-00400-0T00L0	AH465100U001	S14-42506-0
13956-8-8	OSPE50-30500-00440-000000	AH465156U001	S14-42508-0
13958-12-12	OSPE50-30500-00440-000000	AH465207T001	S14-42518-0
13958-16-16	OSPE50-40500-00050-000000	AH465207T003	S14-42519-0
13970-10-8-SM	OSPE50-40500-00050-000000	AH465207U001	S14-42520-0
13970-12-10-SM	OSPE50-40500-00150-000000	AH465207U002	S14-42521-0
13970-12-12-SM	OSPE50-40500-00150-000000	AH465207U003	S14-44482-0
13970-12-16-SM	OSPE50-40500-00160-000000	AH465214U001	S14-47691-0
13970-12-8-SM	OSPE50-40500-00160-000000	AH465214U002	S14-67322-0
13970-16-12-SM	OSPE50-40500-00200-000000	AH465214U003	S14-67454-0
13970-16-16-SM	OSPE50-40500-00200-000000	AH465315T001	S14-68105-0
13970-20-16-SM	OSPE50-40500-00300-000008	AH465315T001-12	S14-68235-0
13970-20-20C-SM	OSPE50-40500-00300-000008	AH465315U001	S14-68245-0
13970-6-6-SM	OSPE50-40500-00500-000000	AH465315U001-12	S14-68246-0
13970-6-8	OSPE50-40500-00500-000000	AH465317T103	S14-68247-0

13971-10-8-SM	OSPE50-40700-00200-000000	AH465317U102	S14-68249-0
13971-12-12-SM	OSPE50-40700-00200-000000	AH465317U103	S14-68250-0
13971-16-12-SM	OSPE50-40700-00450-000000	AH465376U001	S14-68251-0
13971-16-16-SM	OSPE50-40700-00450-000000	AH465467T506	S14-68299-0
13971-20-16-SM	OSPE50-40800-00500-000000	AH465467U106	S14-68300-0
13971-20-20-SM	OSPE50-40800-00500-000000	AH465520T003	S14-68335-0
13971-24-24-SM	OSPE50-50002-00500-B00000	AH465520T003-1	S14-68338-0
13973-12-12-SM	OSPE50-50002-00500-B00000	AH465520U001	S14-68340-0
13973-16-16-SM	OSPE50-50002-00700-B00000	AH465520U002	S14-68345-0
13973-20-20-SM	OSPE50-50002-00700-B00000	AH465520U003	S14-68347-0
13973-24-24-SM	OSPE50-50002-00800-000000	AH465520U004	S14-68351-0
13973-32-32-SM	OSPE50-50002-00800-000000	AH465520U908	S14-68353-0
13977-10-10	OSPE50-50002-00800-B00000	AH465637T001-4	S14-68356-0
13977-12-10	OSPE50-50002-00800-B00000	AH465637T002-4	S14-68361-0
13977-12-12	OSPE50-50002-01200-B00000	AH465637T003-4	S14-68363-0
13977-16-16	OSPE50-50002-01200-B00000	AH465637T004-4	S14-68365-0
13977-20-20	OSPE50-50002-01800-B00000	AH465637T101-4	S14-68366-0
13977-8-8	OSPE50-50002-01800-B00000	AH465637T102-4	S14-68367-0
13978-12-12-SM	OSPE50-50002-02500-000000	AH466001U001	S14-68368-0
13978-16-16	OSPE50-50002-02500-000000	AH466001U101	S14-68371-0
13978-20-20-SM	OSPE50-50004-05000-B00000	AH466002U002	S14-68374-0
13978-24-24	OSPE50-50004-05000-B00000	AH466003T104	S14-68375-0
13991FIL	OSPE50-50006-00600-B00000	AH466003U001	S14-83314-0
13991FIL	OSPE50-50006-00600-B00000	AH466003U002	S14-83315-0
13991N-4-4	OSPE50-50007-00600-B00000	AH466003U003	S14-83584-0
13991N-5-5	OSPE50-50007-00600-B00000	AH466003U101	S14-83643-0
13991N-6-6	OSPE50-50009-03500-003000	AH466003U102	S14-83778-0
139FIL	OSPE50-50009-03500-003000	AH466003U103	S14-83824-0
139FIL	OSPE50-51002-02500-000000	AH466004T002	S14-97600-0
139PC-12-10	OSPE50-51002-02500-000000	AH466004T102	S14-97606-0
139PC-5-04	OSPE50-51006-03773-000000	AH466341U001	S14-97612-0
139PC-6-05	OSPE50-51006-03773-000000	AH466341U002	S14-97616-0
139PX-10-08	OSPE50-51009-03773-B03000	AH466405T001-21	S14-97620-0
139PX-12-10	OSPE50-51009-03773-B03000	AH466405T901-21	S14-97665-0
139PX-4-03	OSPE50-60002-00300-000000	AH466405U001	S14-97682-0
139PX-4-04	OSPE50-60002-00300-000000	AH466405U901	S14-97722-0
139PX-5-04	OSPE50-60002-00400-000000	AH466407T001-4	S14-97723-0
139PX-6-05	OSPE50-60002-00400-000000	AH466616U001	S14-97724-0
139YX-4-03	OSPE50-60002-00570-000000	AH466616U002	S14-97724-5
139YX-4-04	OSPE50-60002-00570-000000	AH466701T002	S14-97725-0
139YX-5-04	OSPE50-60002-01170-000000	AH466701T002-6	S14-97726-0
139YX-6-05	OSPE50-60002-01170-000000	AH466701U001	S14-97738-0
13B8X-4-025	OSPE50-60002-02500-0A9AA8	AH466701U002	S14-97784-0
13B8X-4-04	OSPE50-60002-02500-0A9AA8	AH466701U002-1	S14-97787-0
13BNX-4-04	OSPE50-60002-02600-000000	AH466701U003	S1600
13BNX-6-05	OSPE50-60002-02600-000000	AH466702T001-12	S16-08151-0
13BNX-8-08	OSPE50-60002-04200-000000	AH466703T002-42	S16-08151-5
13BPC-4-04	OSPE50-60002-04200-000000	AH466703U002	S16-08152-0
13BPC-8-08	OSPE50-60004-00260-000000	AH466703U002-1	S16-08152-5
13BPX-2-03	OSPE50-60004-00260-000000	AH466704T001	S16-08153-0
13BPX-4-03	OSPE50-60004-00570-000A00	AH466704T001-6	S16-08153-5
13BPX-4-04	OSPE50-60004-00570-000A00	AH466704U001	S16-08158-0
13BPX-6-05	OSPE50-60004-03600-0A90C0	AH466704U002	S16-08162-0

13BPX-8-08	OSPE50-60004-03600-0A90C0	AH466706U002	S16-08162-5
13BYX-2-03	OSPE50-6000B-01200-000000	AH467328U001	S16-09768-0
13BYX-4-04	OSPE50-6000B-01200-000000	AH467403T305	S16-24690-0
13BYX-8-08	OSPE50-6010B-00830-000090	AH467403T306	S16-32751-0
13D55-10-4	OSPE50-6010B-00830-000090	AH467407U001	S16-33062-0
13D55-12-5	OSPE50-6010B-01200-000000	AH467407U001-2	S16-33593-0
13D55-12-6	OSPE50-6010B-01200-000000	AH467489U001	S16-33646-0
13D55-16-8	OSPE50-6220B-01486-000000	AH467495T307	S16-33660-0
13D55-8-3	OSPE50-6220B-01486-000000	AH467901T105	S16-33663-0
13D56-10-4	OSPE50-6220B-02006-000050	AH467901U105	S16-33669-0
13D56-8-3	OSPE50-6220B-02006-000050	AH467902T105	S16-33669-5
13D56-8-4C	OSPE-MAS20BHD-01047-0	AH467902U105	S16-33703-0
13D58-25-12	OSPE-MAS20BHD-01047-0	AH467902U115	S16-33704-0
13D91N-10-5	OSPE-MAS25BHD-00636-1	AH468001T001	S16-33729-0
13D91N-10-5C	OSPE-MAS25BHD-00636-1	AH468001T002	S16-33888-5
13D91N-12-6C	OSPE-MAS25BHD-00700-0	AH468178T001-2	S16-34042-0
13D91N-16-10C	OSPE-MAS25BHD-00700-0	AH468274T001-2	S16-34043-0
13D91N-20-12C	OSPE-MAS25BHD-01047-0	AH468274U001	S16-34059-0
13D91N-25-16C	OSPE-MAS25BHD-01047-0	AH468749U001	S16-34062-0
13D91N-30-16C	OSPE-MAS25BHD-02029-0	AH469192U107	S16-34064-0
13D91N-8-4	OSPE-MAS25BHD-02029-0	AH469353T101-2	S16-34070-0
13D91N-8-4C	OSPE-MAS32BHD-01724-0	AH469353T102-2	S16-34072-0
13DEX-6-012	OSPE-MAS32BHD-01724-0	AH469354T201-4	S16-34078-0
13DEX-8-012	OSP-ET63-00600	AH469354T202-4	S16-34162-0
13DEX-8-025	OSP-ET63-00600	AH469354T402-4	S16-34253-0
13DEX-8-025C	OSPL25000000200000000000	AH469419T011-1	S16-34254-0
13DNX-20-10	OSPL25000000200000000000	AH469419T012-1	S16-34255-0
13DPX-10-04	OSPL25000000200500000000	AH469798T001	S16-34255-5
13DPX-12-05	OSPL25000000200500000000	AH469798T002	S16-34491-0
13DPX-16-08	OSPL250000000420000B00000	AH469798T003	S16-34540-0
13DYX-10-04	OSPL250000000420000B00000	AH470280T003-1	S16-34823-0
13KAAK13MPN	OSPL25000000500000000000	AH470280T003-7	S16-34852-0
13KAAK13MPNS	OSPL25000000500000000000	AH470280T004-7	S16-34991-0
13KAAK13MPX	OSPL25000000600000000000	AH470280T007-1	S16-34992-0
13KAAK13MPXS_01	OSPL25000000600000000000	AH470280T008-1	S16-34992-5
13KAAK17MPN	OSPL25000000650001000000	AH470280T104	S16-35312-0
13KAAK17MPNS	OSPL25000000650001000000	AH470280U002	S16-37028-0
13KAAK17MPNS_02	OSPL25000000750000000000	AH470280U003	S16-37028-5
13KAAK17MPX	OSPL25000000750000000000	AH470280U004	S16-37029-0
13KAAK21MPN	OSPL25000000850000000000	AH470280U004-1	S16-37030-0
13KAAK21MPNS	OSPL25000000850000000000	AH470280U018	S16-37554-0
13KAAK21MPX	OSPL25000000850001000000	AH470280U102	S16-37555-0
13KAIN13MPX	OSPL25000000850001000000	AH470330T001-1	S16-37606-0
13KAIW13MPN	OSPL25000001450000200000	AH470330T002-1	S16-37754-0
13KAIW13MPNS	OSPL25000001450000200000	AH470330U001	S16-37868-0
13KAIW13MPX	OSPL25000101250001000000	AH470330U002	S16-39099-0
13KAIW13MPXS_01	OSPL25000101250001000000	AH470330U002-1	S16-39104-0
13KAIW17MPN	OSPL25020000001500000000000	AH470330W002	S16-39210-0
13KAIW17MPNS	OSPL25020000001500000000000	AH471145T520-6	S16-39211-0
13KAIW17MPX	OSPL25100000630001000000	AH471145T532-6	S16-39211-5
13KAIW21MPN	OSPL25100000630001000000	AH471146T732-6	S16-39213-0
13KAIW21MPNS	OSPL32000000250000200000	AH471148T500	S16-39213-5
13KAIW21MPX	OSPL32000000250000200000	AH471148T500-1	S16-39214-0

13KATF06MPN	OSPL32000000500011000000	AH471150T500-2	S16-39215-0
13KATF06MPX	OSPL32000000500011000000	AH471150T700-2	S16-39227-0
13KATF08MPN	OSPL32000000750000000000	AH471152T500-3	S16-39229-0
13KATF08MPNS	OSPL32000000750000000000	AH471152T700-3	S16-39258-0
13KATF08MPX	OSPL32000000200000200000	AH471153T513-24	S16-39266-0
13KATF08MPXS_01	OSPL32000000200000200000	AH471153T532-24	S16-39303-0
13KATF10MPN	OSPL32000000340000200000	AH471153T540-24	S16-39303-5
13KATF10MPNS	OSPL32000000340000200000	AH471153T740-24	S16-39332-0
13KATF10MPX	OSPL32000100650000200000	AH471153T770-24	S16-39334-0
13KATF13MPN	OSPL32000100650000200000	AH471157T001-3	S16-39335-0
13KATF13MPNS	OSPL32020000150000000000	AH471771T001	S16-39336-0
13KATF13MPX	OSPL32020000150000000000	AH471771T001-12	S16-39337-0
13SFAK10SXN	OSPL400000000200000B00000	AH471772T001-1	S16-39337-5
13SFAK13SXN	OSPL400000000200000B00000	AH471776T001	S16-39340-0
13SFAK17SXN	OSPL40000000030000100100	AH471892T001-8	S16-39362-0
13SFAK21SXN	OSPL40000000030000100100	AH500075T002-2	S16-39364-0
13SFAN13SXN	OSPL40000000030000100200	AH500075T002-21	S16-39365-0
13SFIK13SXN	OSPL40000000030000100200	AH500075U002	S16-39366-0
13SFIK17SXN	OSPL40000000050000020000	AH500075U002-1	S16-39407-0
13SFIK21SXN	OSPL40000000050000020000	AH500075U002-2	S16-39409-0
13SFIW13SXN	OSPL40000000055000000000	AH500075W002	S16-39442-0
13SFIW17SXN	OSPL40000000055000000000	AH500076T001	S16-39446-0
13SFIW21SXN	OSPL40000000063000100000	AH500076T001-7	S16-39449-0
13SFTF06SXN	OSPL40000000063000100000	AH500076U001	S16-39449-5
13SFTF08SXN	OSPL40000000075000000000	AH500076U001-1	S16-39450-0
13SFTF10SXN	OSPL40000000075000000000	AH500382U007	S16-39450-5
13SFTF13SXN	OSPL40000000075000020000	AH500382U107	S16-39453-0
13V26-8-8-SM	OSPL40000000075000020000	AH500382U108	S16-39453-5
13V46-10-10	OSPL40000000085000100000	AH500382U109	S16-39454-0
13V46-10-6	OSPL40000000085000100000	AH500385T104	S16-39455-0
13V46-10-8	OSPL40000000090000000000	AH500385U102	S16-39457-0
13V46-4-4	OSPL40000000090000000000	AH500385U103	S16-39458-0
13V46-5-4	OSPL40000001000000000000	AH500385U104	S16-39461-0
13V46-5-5	OSPL40000001000000000000	AH500818T203	S16-39490-0
13V46-8-6	OSPL40000001100000000000	AH500818T204	S16-39492-0
13V46-8-8	OSPL40000001100000000000	AH500899T002	S16-39492-5
13V48-10-10	OSPL40000001100000200000	AH500935U001	S16-39495-0
13V48-10-6	OSPL40000001100000200000	AH500935U001-12	S16-39495-5
13V48-10-8	OSPL40000001400000200000	AH500935U001-2	S16-39496-0
13V48-4-4	OSPL40000001400000200000	AHR-5-L10M	S16-39499-0
13V48-4-4C	OSPL40000100760000000000	AI13	S16-39499-5
13V48-5-4	OSPL40000100760000000000	AI21SF	S16-39530-0
13V48-5-5	OSPL40020000750000000000	AJ13/06B	S16-39537-0
13V48-8-6	OSPL40020000750000000000	AJ13/06B-26	S16-39538-0
13V48-8-8	OSPP10000000020000000000	AJ13/06SET	S16-39538-5
13V48-8-8C	OSPP10000000020000000000	AJ13/08	S16-39541-0
13W26-8-8-SM	OSPP10000000055000000000	AJ13/08B	S16-39565-0
13W43-8-6-SM	OSPP10000000055000000000	AJ13/08SET	S16-39565-5
13W43-8-8C-SM	OSPP10000000060000000000	AJ13-1000	S16-39668-0
13W46-10-10	OSPP10000000060000000000	AJ13-300	S16-45166-0
13W46-10-6	OSPP10000000075000000000	AJ13-500	S16-63074-0
13W46-10-8	OSPP10000000075000000000	AJ13R	S16-63178-0
13W46-4-4	OSPP10000000080000000000	AK06TF	S16-63288-0

13W46-4-6	OSPP10000000080000000000	AK09TF	S16-63334-0
13W46-5-4	OSPP10000000092000000000	AK13	S16-63334-5
13W46-5-5	OSPP10000000092000000000	AK13-1000	S16-63343-0
13W46-8-6	OSPP10000000095000000000	AK13-300	S16-63343-5
13W46-8-8	OSPP10000000095000000000	AK13-320	S16-63408-0
13W48-10-10	OSPP10000000100000000000	AK13-600	S16-63474-0
13W48-10-6	OSPP10000000100000000000	AK13-800	S16-63474-5
13W48-10-8	OSPP10000000100001000000	AK13-NPT	S16-63554-0
13W48-4-4	OSPP10000000100001000000	AK13S_02	S16-63607-0
13W48-4-6	OSPP10000000105001000000	AK13S_04	S16-63633-0
13W48-5-4	OSPP10000000105001000000	AK13S_05	S16-63633-5
13W48-5-5	OSPP10000000110000000000	AK13S_09	S16-63638-0
13W48-8-6	OSPP10000000110000000000	AK13S_20	S16-63639-0
13W48-8-8	OSPP10000000115000000000	AK13S_99	S16-63647-0
13W48-8-8C	OSPP10000000115000000000	AK13SET	S16-63697-0
13W70-4-6-SM	OSPP10000000120000000000	AK13SF	S16-63761-0
13W70-8-6-SM	OSPP10000000120000000000	AK21SF	S16-63785-0
13Y46-10-10	OSPP10000000120001000000	AK26SF	S16-63873-0
13Y46-4-4	OSPP10000000120001000000	AK26SFS	S16-64063-0
13Y46-8-6	OSPP10000000122000000000	AK26SFS_01	S16-64063-5
13Y46-8-8	OSPP10000000122000000000	AK26SFS_99	S16-64071-0
13Y48-10-10	OSPP10000000125000000000	AK-4D01CG0QB	S16-64074-5
13Y48-4-4	OSPP10000000125000000000	AK-4D01CW01C	S16-65024-0
13Y48-8-6	OSPP10000000130000000000	AK-4D01CW02B	S16-65025-0
13Y48-8-8	OSPP10000000130000000000	AK-4D01CW02C	S16-65137-0
14 BODY DIE	OSPP10000000130001000000	AK-4D01CW21C	S16-65137-5
14 BTX-S	OSPP10000000130001000000	AK-4D01SW02C	S16-65185-0
14 BTX-SS	OSPP10000000131000000000	AK-4D01TDJ8C	S16-65186-0
14 BZ-SS	OSPP10000000131000000000	AK-D1FBCJW10	S16-65187-0
14 C6X-S	OSPP10000000133000000000	AK-D1FBCKW310	S16-65188-0
14 CTX-S	OSPP10000000133000000000	AK-D1FBCMW10	S16-65509-0
14 ETX-S	OSPP10000000135000000000	AK-D1FBC-OBE	S16-65582-0
14 F5OX-S	OSPP10000000135000000000	AK-D1FBSJW10	S16-65583-0
1-4 FBZ7-SS	OSPP10000000140000000000	AK-D1FBSMW014	S16-65697-5
1-4 FBZ-SS	OSPP10000000140000000000	AK-D1FBSMW10	S16-65698-0
1-4 FH4BZ-SS	OSPP10000000142000000000	AK-D1FVSB030	S16-65698-5
1-4 FLZ7-SS	OSPP10000000142000000000	AK-D1FVSXW20	S16-65843-0
14 FNTX-S	OSPP10000000145000000000	AK-D1MWCJJ1P75	S16-65843-5
14 FTX-S	OSPP10000000145000000000	AK-D1VWCAW91	S16-65900-0
14 HP5ON-S	OSPP10000000150000000000	AK-D1VWCGW91	S16-80023-0
14 HP5ON-S V0894	OSPP10000000150000000000	AK-D1VWCHW91	S16-80260-0
14 HTX-S	OSPP10000000155000000000	AK-D1VWCJA91	S16-80597-0
14 JTX-S	OSPP10000000155000000000	AK-D1VWCJDJ591	S16-80692-0
14 MTX-S	OSPP10000000157000000000	AK-D1VWCJDL91	S16-81633-0
14 NUT DIE	OSPP10000000157000000000	AK-D1VWCJDLJ591	S16-81797-0
14 OTX-S	OSPP10000000158000000000	AK-D1VWCJJ1P91	S16-82054-0
14 P5ON-S	OSPP10000000158000000000	AK-D1VWCJW1P91	S16-82261-0
14 PNTX-S	OSPP10000000160000000000	AK-D1VWCJW75	S16-82889-0
14 R6X-S	OSPP10000000160000000000	AK-D1VWCJW91	S16-82890-0
14 TX-S	OSPP10000000161000000000	AK-D1VWCJWL91	S16-82891-0
14 TZ-SS	OSPP10000000161000000000	AK-D1VWCKA91	S16-82892-0
14 V6X-S	OSPP10000000162000000000	AK-D1VWCKJ1P91	S16-82893-0
14 WTX-WLN-S	OSPP10000000162000000000	AK-D1VWCKW1P91	S16-82895-0

1400KAAK13SPN	OSPP1000000000165000000000	AK-D1VWCKW91	S16-82896-0
1400KAAK17SPN	OSPP1000000000165000000000	AK-D1VWCSW91X5099	S16-82897-0
1400KAAK21SPN	OSPP1000000000170000000000	AK-D1VWCSW91X5102	S16-82987-0
1400KAIW13SPN	OSPP1000000000170000000000	AK-D1VWCSW91X5163	S16-82988-0
1400KAIW17SPN	OSPP1000000000175000000000	AK-D1VWCSW91X610	S16-82989-0
1400KAIW21SPN	OSPP1000000000175000000000	AK-D1VWCTW70	S16-82990-0
1400KAKU13SPN	OSPP1000000000180000000000	AK-D1VWCTW91	S16-84216-0
1400KATF06SPN	OSPP1000000000180000000000	AK-D1VWCTWW91	S16-84519-0
1400KATF08SPN	OSPP1000000000180001000000	AK-D1VWCUW91	S16-84614-0
1400KATF09SPN	OSPP1000000000180001000000	AK-D1VWCYW70	S16-84615-0
1400KATF10SPN	OSPP1000000000185000000000	AK-D1VWCYW91	S16-84616-0
1400KATF13SPN	OSPP1000000000185000000000	AK-D1VWSGW91	S16-84681-0
1401.02	OSPP1000000000185001000000	AK-D1VWSJA91	S16-85469-0
1401FIL	OSPP1000000000185001000000	AK-D1VWSJDL91	S16-85826-0
1401FIL	OSPP1000000000190000000000	AK-D1VWSJDLJ591	S16-86000-0
1401U00 00 02	OSPP1000000000190000000000	AK-D1VWSJEE92	S16-86001-0
1401U00 00 06	OSPP1000000000190001000000	AK-D1VWSJW91	S16-86027-0
14067-00895	OSPP1000000000190001000000	AK-D1VWSJWW91	S16-86028-0
14067-00895	OSPP1000000000192000000000	AK-D1VWSKW91	S16-86131-0
1406FIL	OSPP1000000000192000000000	AK-D1VWSSW91X610	S16-86133-0
1406FIL	OSPP1000000000197000000000	AK-D1VWSTW91	S16-86133-5
14072FIL	OSPP1000000000197000000000	AK-D1VWSUW91	S16-86286-0
14072FIL	OSPP1000000000200000000000	AK-D1VWSYW91	S16-86297-0
14085FIL	OSPP1000000000200000000000	AK-D1VWSYWW91	S16-86390-0
14085FIL	OSPP1000000000200001000000	AK-D1VWTD4D91	S16-86709-0
14088FIL	OSPP1000000000200001000000	AK-D1VWTD91	S16-86720-0
14088FIL	OSPP1000000000209000000000	AK-D1VWTDS291	S16-86721-0
14090FIL	OSPP1000000000209000000000	AK-D1VWTDS391	S16-86721-5
14090FIL	OSPP1000000000210000000000	AK-D1VWTDW91	S16-86722-0
14091FIL	OSPP1000000000210000000000	AK-D3FBCKW12	S16-87225-0
14091FIL	OSPP1000000000215000000000	AK-D3MWCJW1P30	S16-87275-0
14094FIL	OSPP1000000000215000000000	AK-D3WCAW30	S16-87276-0
14094FIL	OSPP1000000000220000000000	AK-D3WCDW30	S16-87317-0
1409FIL	OSPP1000000000220000000000	AK-D3WCGW30	S16-87509-0
1409FIL	OSPP1000000000225000000000	AK-D3WCJA1P30	S16-87631-0
140-QC	OSPP1000000000225000000000	AK-D3WCJW30	S16-87631-5
140-QC	OSPP1000000000226000000000	AK-D3WCKW30	S16-87668-0
140R	OSPP1000000000226000000000	AK-D3WCSW30X5197	S16-88105-0
14-1/2 F5OG-S	OSPP1000000000240000000000	AK-D3WCSW30X610	S16-88781-0
14-10 TRTX-S	OSPP1000000000240000000000	AK-D3WCTW30	S16-88781-5
14-12 CBZ-SS	OSPP1000000000250000000000	AK-D3WCUW30	S16-88904-0
14-12 DBZ-SS	OSPP1000000000250000000000	AK-D3WCYW30	S16-89102-0
14-12 GBZ-SS	OSPP1000000000255001000000	AK-D3WSAW30	S16-89197-0
14-12 TRTXN-S	OSPP1000000000255001000000	AK-D3WSGW30	S16-89370-0
14-12TRMTXSS	OSPP1000000000259000000000	AK-D3WSJW30	S16-89434-0
14-14 EBZ-SS	OSPP1000000000259000000000	AK-D3WSJWT30	S16-89462-0
14-14 HBZ-SS	OSPP1000000000260000000000	AK-D3WSKW30	S16-89524-0
14-14-14 JBZ-SS	OSPP1000000000260000000000	AK-D3WSTW30	S16-89545-0
14146-12-12	OSPP1000000000281000000000	AK-D3WSTWH30	S16-89548-0
14146-16-16	OSPP1000000000281000000000	AK-D3WSUW30	S16-89590-0
14146-6-4	OSPP1000000000290000000000	AK-D3WSYW30	S16-89620-0
14146-6-6	OSPP1000000000290000000000	AK-D3WTA30	S16-89756-0
14148-12-12	OSPP1000000000300000000000	AK-D3WTAH30	S16-89836-0

14148-16-16	OSPP10000000300000000000	AK-D3WTD30	S16-89840-0
14148-6-4	OSPP10000000310000000000	AK-D3WTD4D30	S16-89886-0
14148-6-6	OSPP10000000310000000000	AK-D3WTS430	S16-91032-0
14155-5-4	OSPP10000000320000000000	AK-D3WTS730	S16-91035-0
14155-6-6	OSPP10000000320000000000	AK-DSAESLA	S16-91187-0
14-16 F5OX-S	OSPP10000000325000000000	AKFS711	S16-91202-0
14164FIL	OSPP10000000325000000000	AKFS711	S16-91213-0
14164FIL	OSPP10000000350000000000	AKKU-PACK SCM-400	S16-91450-0
14165FIL	OSPP10000000350000000000	AKL04LL	S16-91459-0
14165FIL	OSPP10000000380000000000	AKL06LL	S16-91460-0
14177FIL	OSPP10000000380000000000	AKL06LS	S16-91560-0
14177FIL	OSPP10000000400000000000	AKL08LL	S16-91561-0
14178FIL	OSPP10000000400000000000	AKL08LS	S16-91562-0
14178FIL	OSPP10000000420000000000	AKL10L	S16-91570-0
14179FIL	OSPP10000000420000000000	AKL10S	S16-91795-0
14179FIL	OSPP10000000430000000000	AKL12L	S16-91850-0
1417FIL	OSPP10000000430000000000	AKL12S	S16-91851-0
1417FIL	OSPP10000000450000000000	AKL14S	S16-91851-5
14180FIL	OSPP10000000450000000000	AKL15L	S16-91852-0
14180FIL	OSPP10000000450001000000	AKL16S	S16-91852-5
1420U04 11	OSPP10000000450001000000	AKL18L	S16-91873-0
1420U04 41	OSPP10000000456000000000	AKL20S	S16-91963-0
1420U04 44	OSPP10000000456000000000	AKL22L	S16-92487-0
1420U06 11	OSPP10000000460000000000	AKL25S	S16-92488-0
1420U06 41	OSPP10000000460000000000	AKL28L	S16-92489-0
1420U06 44	OSPP10000000500000000000	AKL30S	S16-92523-0
1420U08 11	OSPP10000000500000000000	AKL35L	S16-92796-0
1420U08 41	OSPP10000000500001000000	AKL38S	S16-92797-0
1420U08 44	OSPP10000000500001000000	AKL42L	S16-94198-0
1423KAAK13SPN	OSPP10000000550000000000	AK-RE06WCKW	S16-94299-0
1423KAAK17SPN	OSPP10000000550000000000	AK-RE06WCXW	S16-94315-0
1423KAAK17SPN_99	OSPP10000000550001000000	AK-TDADSLA	S16-94413-0
1423KAAK21SPN	OSPP10000000550001000000	AK-TDADSMA	S16-94425-0
1423KAAK21SPN_99	OSPP10000000591000000000	AK-TDAESLA	S16-94456-0
1423KAIW13SPN	OSPP10000000591000000000	AK-TDAESMA	S16-94509-0
1423KAIW17SPN	OSPP10000000600000000000	AK-VMY/VBY-K	S16-94637-0
1423KAIW21SPN	OSPP10000000600000000000	AK-VMYCG24	S16-94688-0
1423KAIW21SPN_99	OSPP10000000650000000000	AL09TF	S16-94763-0
1423KATF06SPN	OSPP10000000650000000000	AL116423	S16-94807-0
1423KATF08SPN	OSPP10000000700000000000	AL13	S16-94889-0
1423KATF09SPN	OSPP10000000700000000000	AL13S_04	S16-95111-0
1423KATF09SPN_99	OSPP10000000705000000000	AL28-T4-KL00	S16-95117-0
1423KATF10SPN	OSPP10000000705000000000	AL28-T4-KL00	S16-95119-0
1423KATF13SPN	OSPP10000000707000000000	AL7358-316	S16-95143-0
1423KATF13SPN_99	OSPP10000000707000000000	ALV1209	S16-95301-0
1427-00125	OSPP10000000720001000000	AM-03	S16-95303-0
1427-00125	OSPP10000000720001000000	AM-04	S16-95306-0
1427-00150	OSPP10000000724000000000	AM-06	S16-95307-0
1427-00150	OSPP10000000724000000000	AM-08	S16-95310-0
1427-00165	OSPP10000000730000000000	AM-10	S16-95310-5
1427-00165	OSPP10000000730000000000	AM13	S16-95390-0
1427-00200	OSPP10000000750000000000	AM-13	S16-95428-0
1427-00200	OSPP10000000750000000000	AM-16	S16-95429-0

1427-00260	OSPP100000000800000000000	AM1-DE200	S16-95454-0
1427-00260	OSPP100000000800000000000	AM1-DE200	S16-95528-0
1427-00285	OSPP100000000900000000000	AM-20	S16-95721-0
1427-00285	OSPP100000000900000000000	AM26SF	S16-95738-0
1427-00300	OSPP100000000970000000000	AMO10540/F	S16-95851-0
1427-00300	OSPP100000000970000000000	AMO14540/F	S16-95943-0
1427-00320	OSPP100000001091000000000	AMO20540/F	S16-96106-0
1427-00320	OSPP100000001091000000000	AMPH-12	S16-96136-0
1427-00350	OSPP100000001210000000000	AMPH-16	S16-96209-0
1427-00350	OSPP100000001210000000000	AMPH-20	S16-96221-0
1427-00380	OSPP100000001726000000000	AMPH-24	S16-96269-0
1427-00380	OSPP100000001726000000000	AMPH-24C12	S16-96331-0
1427-00400	OSPP100000002300000000000	AMPH-32	S16-96412-0
1427-00400	OSPP100000002300000000000	AMPH-4	S16-96689-0
1427-00410	OSPP100000003050000000000	AMPH-6	S16-96710-0
1427-00410	OSPP100000003050000000000	AMPH-8	S16-96715-0
1427-00450	OSPP100000100050000000000	AN06TF	S16-96795-0
1427-00450	OSPP100000100050000000000	AN09TF	S16-96826-0
1427-00480	OSPP100001000200000000000	AN13	S16-96829-0
1427-00480	OSPP100001000200000000000	AN13S_02	S16-98146-0
1427-00600	OSPP100001000400000000000	AN21SF	S16-98146-5
1427-00600	OSPP100001000400000000000	AN26SF	S16-98182-0
1427-00610	OSPP100001000440000000000	ANE1213/5	S16-98205-0
1427-00610	OSPP100001000440000000000	ANTENNE SCJN	S16-98238-0
1427-00650	OSPP100001100080000000000	AO16CFX	S16-98349-0
1427-00650	OSPP100001100080000000000	AO16SSX	S16-98746-0
1427-00700	OSPP100001100090000000000	AO20CFX	S16-98768-0
1427-00700	OSPP100001100090000000000	AO20SSX	S16-98873-0
1427-00750	OSPP100001100125000000000	AO24CFX	S16-98945-0
1427-00750	OSPP100001100125000000000	AO24SSX	S18-C2-A000
1427-00900	OSPP100001100400000000000	AO32CFX	S18-C2-A000
1427-00900	OSPP100001100400000000000	AO32SSX	S2000
1427-00910	OSPP100010000180000000000	AO40CFX	S201B040R000
1427-00910	OSPP100010000180000000000	AO48CFX	S201B040RB00
1427-01800	OSPP100010000450000000000	AO48SSX	S23-00134-0K
1427-01800	OSPP100010000450000000000	AP00-1630	S23-00143-0K
1427-03580	OSPP100010001050000000000	AP04G2YR10C	S23-03237-0K
1427-03580	OSPP100010001050000000000	AP04G2YR35C	S23-03260-0K
1428-00260	OSPP100010100600000000000	AP04G2YR9185	S23-05992-0K
1428-00260	OSPP100010100600000000000	AP04G2YR9186	S23-11515-0
1428-00350	OSPP101000000185000000000	AP06SA	S23-11516-0K
1428-00350	OSPP101000000185000000000	AP06SA02	S23-11600-0K
1428-00370	OSPP101000001050000000000	AP40	S23-12104-0K
1428-00370	OSPP101000001050000000000	AP60	S23-12413-0K
1428-00500	OSPP106004001000000000000	AP90	S23-12416-0K
1428-00500	OSPP106004001000000000000	APB14571X	S23-12667-0K
14-2829	OSPP160000000010000000000	APB1X	S23-12681-0K
14345-00200	OSPP160000000010000000000	APB24571X	S23-12742-0K
14345-00200	OSPP160000000040000000000	APB2X	S23-15157-5
14345-01250	OSPP160000000040000000000	APB34571X	S23-15696-0K
14345-01250	OSPP160000000050000000000	APB3VZX	S23-17000-0K
14383FIL	OSPP160000000050000000000	APB3X	S23-17026-0K
14383FIL	OSPP160000000065000000000	APB44571X	S23-17032-0K

1440.002.02	OSPP160000000065000000000	APB4X	S23-17242-5K
1440.013.01	OSPP160000000070001000000	APB54571X	S23-17246-0K
1440.075.01	OSPP160000000070001000000	APB5VZX	S23-17563-0K
14402FIL	OSPP160000000073000200000	APB5X	S23-17652-0K
14402FIL	OSPP160000000073000200000	APC14571X	S2400
1441.022.01	OSPP160000000080000000000	APC1VZX	S24-05509-0
1442.013.02	OSPP160000000080000000000	APC1X	S24-10116-0
14423FIL	OSPP160000000085000000000	APC24571X	S24-10121-0
14423FIL	OSPP160000000085000000000	APC2VZX	S24-10123-0
14428-00600	OSPP160000000087000000000	APC2X	S24-10124-0
14428-00600	OSPP160000000087000000000	APC34571X	S24-10125-0
1443.023.01	OSPP160000000090000000000	APC3VZX	S24-10128-0
1443.032.01	OSPP160000000090000000000	APC3X	S24-10129-0
145602-N	OSPP160000000095000000000	APC44571X	S24-10130-0
145903000C	OSPP160000000095000000000	APC4VZX	S24-10131-0
145903000C	OSPP160000000100000000000	APC4X	S24-10132-0
145ST2M111B021H	OSPP160000000100000000000	APC54571X	S24-10133-0
145ST2M111K024S	OSPP160000000100000B00000	APC5VZX	S24-10133-4
14-6 TRTX-S	OSPP160000000100000B00000	APC5X	S24-10133-5
146021-01	OSPP160000000100000E00000	APC64571X	S24-10133-6
1460U08 04	OSPP160000000100000E00000	APC6VZX	S24-10136-0
1460U10 04	OSPP160000000110000000000	APC6X	S24-10138-0
1460U12 04	OSPP160000000110000000000	APC74571X	S24-10138-5
1461EL-12	OSPP160000000118300E00000	APC7VZX	S24-10158-0
1461EL-12	OSPP160000000118300E00000	APC7X	S24-10160-0
1461FIL	OSPP160000000120000000000	APC8X	S24-10164-0
1461FIL	OSPP160000000120000000000	APC9X	S24-10165-0
1461U08 04	OSPP160000000125000000000	APDA04571X	S24-10170-0
1461U10 04	OSPP160000000125000000000	APDA0X	S24-10170-5
1461U12 04	OSPP160000000125000200000	APDA14571X	S24-10175-0
1462B-11	OSPP160000000125000200000	APDA1VZX	S24-10176-0
1462B-11	OSPP160000000125060B00000	APDA1X	S24-10178-0
1462EL-12	OSPP160000000125060B00000	APDA24571X	S24-10179-0
1462EL-12	OSPP160000000130000000000	APDA2X	S24-10180-0
1462U08 04	OSPP160000000130000000000	APDA34571X	S24-10181-0
1462U10 04	OSPP160000000140000000000	APDA3X	S24-10183-0
1462U12 04	OSPP160000000140000000000	APDA44571X	S24-10184-0
146456-01	OSPP160000000147000000000	APDA4X	S24-10185-0
146802-01	OSPP160000000147000000000	APDA54571X	S24-10186-0
1470P06 04 13	OSPP160000000150000000000	APDA5VZX	S24-10186-5
1470P06 07 13	OSPP160000000150000000000	APDA5X	S24-10205-0
1470P08 04 13	OSPP160000000150000200000	APDA64571X	S24-10206-0
1470P08 07 13	OSPP160000000150000200000	APDA6X	S24-10207-0
1470U04 03 10	OSPP160000000155000000000	APDC1X	S24-10208-0
1470U04 04 10	OSPP160000000155000000000	APDC2X	S24-10209-0
1470U04 05 10	OSPP160000000160000000000	APDC3X	S24-10210-0
1470U06 03 13	OSPP160000000160000000000	APDC4X	S24-10211-0
1470U06 04 13	OSPP160000000016000000F000	APDC5X	S24-10211-5
1470U06 05 13	OSPP160000000016000000F000	APDC6X	S24-10212-0
1470U08 03 13	OSPP160000000160000200000	APDC7X	S24-10219-0
1470U08 04 13	OSPP160000000160000200000	APDC8X	S24-10219-5
1470U08 05 13	OSPP160000000160001000000	APHN4-4M	S24-10224-0
1470U10 03 13	OSPP160000000160001000000	APHN6-6F	S24-10228-0

1470U10 04 13	OSPP160000000165000000000	APKA04571X	S24-10230-0
1470U10 05 13	OSPP160000000165000000000	APKA0X	S24-10242-0
1470U12 01 17	OSPP160000000170000000000	APKA14571X	S24-10242-5
1470U12 03 17	OSPP160000000170000000000	APKA1VZX	S24-10346-0
1470U12 04 17	OSPP160000000170000200000	APKA1X	S24-10347-0
1470U12 05 17	OSPP160000000170000200000	APKA24571X	S24-10348-0
1471P06 04 13	OSPP160000000175000000000	APKA2VZX	S24-10350-0
1471P06 07 13	OSPP160000000175000000000	APKA2X	S24-10351-0
1471P08 04 13	OSPP160000000180000000000	APKA34571X	S24-10352-0
1471P08 07 13	OSPP160000000180000000000	APKA3X	S24-10352-4
1471U04 03 10	OSPP16000000018000000F000	APKA44571X	S24-10352-5
1471U04 04 10	OSPP16000000018000000F000	APKA4VZX	S24-10375-0
1471U04 05 10	OSPP160000000185000000000	APKA4X	S24-10376-0
1471U06 03 13	OSPP160000000185000000000	APKA54571X	S24-10377-0
1471U06 04 13	OSPP160000000187000000000	APKA5VZX	S24-10380-0
1471U06 05 13	OSPP160000000187000000000	APKA5X	S24-10382-0
1471U08 03 13	OSPP160000000190000000000	APKA64571X	S24-10383-0
1471U08 04 13	OSPP160000000190000000000	APKA6VZX	S24-10386-0
1471U08 05 13	OSPP160000000193000000000	APKA6X	S24-10386-5
1471U10 03 13	OSPP160000000193000000000	APKA74571X	S24-10430-0
1471U10 04 13	OSPP160000000200000000000	APKA7X	S24-10484-0
1471U10 05 13	OSPP160000000200000000000	APKA8X	S24-10694-0
1471U12 03 17	OSPP160000000200000200000	APLA04571X	S24-10696-0
1471U12 04 17	OSPP160000000200000200000	APLA0X	S24-10698-0
1471U12 05 17	OSPP160000000200003000000	APLA14571X	S24-10721-0
1472P06 04 13	OSPP160000000200003000000	APLA1VZX	S24-10722-0
1472P06 07 13	OSPP160000000202000000000	APLA1X	S24-10723-0
1472P08 04 13	OSPP160000000202000000000	APLA24571X	S24-10724-0
1472P08 07 13	OSPP160000000205000000000	APLA2VZX	S24-10725-0
1472U08 03 13	OSPP160000000205000000000	APLA2X	S24-10727-0
1472U08 04 13	OSPP160000000210000000000	APLA34571X	S24-10729-0
1472U08 05 13	OSPP160000000210000000000	APLA3VZX	S24-10730-0
1472U10 03 13	OSPP16000000021000000F000	APLA3X	S24-10733-0
1472U10 04 13	OSPP16000000021000000F000	APLA44571X	S24-10734-0
1472U10 05 13	OSPP160000000210000200000	APLA4VZX	S24-10735-0
1472U12 03 17	OSPP160000000210000200000	APLA4X	S24-10737-0
1472U12 04 17	OSPP160000000210000600000	APLA54571X	S24-10739-0
1472U12 05 17	OSPP160000000210000600000	APLA5VZX	S24-10741-0
14946-10-4	OSPP160000000210001000000	APLA5X	S24-10743-0
14946-12-4	OSPP160000000210001000000	APLA64571X	S24-10744-0
14946-13-4	OSPP160000000212000000000	APLA6X	S24-10745-0
14946-14-4	OSPP160000000212000000000	APLC14571X	S24-10746-0
14946-14-5	OSPP160000000215000000000	APLC1VZX	S24-10747-0
14946-14-6	OSPP160000000215000000000	APLC1X	S24-10749-0
14946-16-5	OSPP160000000220000000000	APLC24571X	S24-10751-0
14946-16-6	OSPP160000000220000000000	APLC2VZX	S24-10752-0
14946-17-4	OSPP160000000220000200000	APLC2X	S24-10753-0
14946-17-6	OSPP160000000220000200000	APLC3X	S24-10755-0
14946-18-6	OSPP160000000225000000000	APLC4VZX	S24-10757-0
14946-18-8	OSPP160000000225000000000	APLC4X	S24-10758-0
14946-22-10	OSPP160000000230000000000	APLC54571X	S24-10759-0
14946-22-6	OSPP160000000230000000000	APLC5X	S24-10760-0
14946-22-8	OSPP160000000230000200000	APLC6X	S24-10761-0

14946-26-12	OSPP160000000230000200000	APLC7X	S24-10763-0
14946-27-12	OSPP160000000230000600000	APLC8X	S24-10765-0
14948-10-4	OSPP160000000230000600000	APRA04571X	S24-10767-0
14948-12-4	OSPP160000000230003000000	APRA0X	S24-10769-0
14948-14-4	OSPP160000000230003000000	APRA14571X	S24-10773-0
14948-14-5	OSPP160000000240000000000	APRA1X	S24-10775-0
14948-14-6	OSPP160000000240000000000	APRA24571X	S24-10776-0
14948-16-5	OSPP160000000240000006000	APRA2X	S24-10777-0
14948-16-6	OSPP160000000240000006000	APRA34571X	S24-10777-5
14948-17-4	OSPP160000000250000000000	APRA3X	S24-10778-0
14948-17-6	OSPP160000000250000000000	APRA44571X	S24-10779-0
14948-18-6	OSPP160000000025000000F000	APRA4X	S24-10780-0
14948-18-8	OSPP160000000025000000F000	APRA54571X	S24-10781-0
14948-22-10	OSPP160000000250000200000	APRA5X	S24-10782-0
14948-22-6	OSPP160000000250000200000	APRA64571X	S24-10783-0
14948-22-8	OSPP160000000250000600000	APRA6X	S24-10783-5
14948-26-12	OSPP160000000250000600000	APRB1X	S24-10784-0
14948-27-12	OSPP160000000250000B00000	APRB2X	S24-10803-0
14948-30-16	OSPP160000000250000B00000	APRB3X	S24-10805-0
14955-12-4	OSPP160000000250001000000	APRB4X	S24-10806-0
14955-12-5	OSPP160000000250001000000	APRB5X	S24-10807-0
14955-14-5	OSPP160000000255000000000	APWA04571X	S24-10808-0
14956-12-4	OSPP160000000255000000000	APWA0X	S24-10829-0
14956-12-5	OSPP160000000260000000000	APWA14571X	S24-10837-0
14956-14-4	OSPP160000000260000000000	APWA1X	S24-10838-0
149EX-10-025	OSPP160000000260000200000	APWA24571X	S24-10839-0
149EX-10-02S	OSPP160000000260000200000	APWA2X	S24-10840-0
149EX-8-02	OSPP160000000270000000000	APWA34571X	S24-10841-0
149PX-10-03-LPG	OSPP160000000270000000000	APWA3X	S24-10842-0
14A73-20-16-1P	OSPP160000000270001000000	APWA44571X	S24-10843-0
14A73-20-20	OSPP160000000270001000000	APWA4X	S24-10844-0
14A73-24-20-1P	OSPP160000000275000000000	APWA54571X	S24-10845-0
14A73-24-24	OSPP160000000275000000000	APWA5X	S24-10847-0
14A73-32-24-1P	OSPP160000000280000000000	APWA64571X	S24-10848-0
14A73-32-32-1P	OSPP160000000280000000000	APWA6X	S24-10849-0
14A77-20-16	OSPP160000000280000200000	AR-04	S24-10850-0
14A77-20-20	OSPP160000000280000200000	AR-04AE	S24-10851-0
14A77-24-20	OSPP160000000285000000000	AR-08	S24-10852-0
14A78-20-16-1P	OSPP160000000285000000000	AR-08AE	S24-10853-0
14A78-20-20	OSPP160000000291000000M00	AR-10	S24-10855-0
14A78-24-24-1P	OSPP160000000291000000M00	AR12	S24-10856-0
14AS6-32-32	OSPP160000000295000000000	AR13	S24-10857-0
14BF14-316	OSPP160000000295000000000	AR14X	S24-10857-5
14BMTXSZNFE3T	OSPP160000000300000000000	AR-16	S24-10858-0
14E01B10FC1	OSPP160000000300000000000	AR-20	S24-10859-0
14E01B10FC1	OSPP160000000030000000F000	AR20.5X	S24-10861-0
14E05B13FC1	OSPP160000000030000000F000	AR-20AE	S24-10862-0
14E05B13FC1	OSPP160000000300000200000	AR234401	S24-10863-0
14E11B13FC1	OSPP160000000300000200000	AR26SF	S24-10865-0
14E11B13FC1	OSPP160000000300000E00000	AR28-T3-F000	S24-10867-0
14E11B18FC	OSPP160000000300000E00000	AR28-T3-F000	S24-10868-0
14E11B18FC	OSPP160000000300003000000	AR6067	S24-10869-0
14E15B13FC1	OSPP160000000300003000000	AR6154	S24-10870-0

14E15B13FC1	OSPP160000000306000000000	AR8.5X	S24-10871-0
14EE14-316	OSPP160000000306000000000	ARC1/4	S24-10872-0
14ET14-316	OSPP160000000306001000000	ARC1/4	S24-10916-0
14F01BB1	OSPP160000000306001000000	ARC1/8	S24-10957-0
14F01BB1	OSPP160000000310000000000	ARC1/8	S24-11697-0
14F11BB1	OSPP160000000310000000000	ARD102S30-C3D	S24-11918-0
14F11BB1	OSPP160000000320000000000	AS025HM001	S24-25510-0
14F15BB1	OSPP160000000320000000000	AS032HM001	S24-25544-0
14F15BB1	OSPP160000000320000200000	AS040HM001	S24-25546-0
14F42EDMXS	OSPP160000000320000200000	AS040MMB01	S24-25547-0
14F73-20-16-1P	OSPP160000000325000000000	AS050HM001	S24-25555-0
14F73-20-20-1P	OSPP160000000325000000000	AS050MMB02	S24-25556-0
14F73-24-20-1P	OSPP160000000330000000000	AS063HM001	S24-25557-0
14F73-24-24	OSPP160000000330000000000	AS06L	S24-25558-0
14F73-32-32-1P	OSPP160000000335000000000	AS06L71	S24-25559-0
14F77-20-16	OSPP160000000335000000000	AS06L71X	S24-25560-0
14F77-20-20	OSPP160000000340000000000	AS06LX	S24-25566-0
14F77-24-20	OSPP160000000340000000000	AS06S	S24-25567-0
14F78-20-16-1P	OSPP160000000340000B00000	AS06S71	S24-25570-0
14F78-20-20-1P	OSPP160000000340000B00000	AS06S71X	S24-25571-0
14F78-24-20	OSPP160000000340003000000	AS06SX	S24-25572-0
14F78-24-24	OSPP160000000340003000000	AS06TF	S24-25573-0
14FF14-316	OSPP160000000345000200000	AS06ZL	S24-25575-0
14FS6-32-32	OSPP160000000345000200000	AS06ZL71	S24-25575-4
14FSC12N-316	OSPP160000000350000000000	AS06ZS	S24-25575-5
14HP5NSBPCFX	OSPP160000000350000000000	AS080HM001	S24-25791-0
14KAAK13MPX	OSPP160000000350000200000	AS080HM005	S24-25891-0
14KAAK17MPX	OSPP160000000350000200000	AS080MMB01	S24-25893-0
14KAAN13MPX	OSPP160000000350001000000	AS080MMB02	S24-25894-0
14KAAW13MPN	OSPP160000000350001000000	AS08L	S24-25970-0
14KAAW13MPNS_02	OSPP160000000350003000000	AS08L71	S24-25980-0
14KAAW13MPX	OSPP160000000350003000000	AS08L71X	S24-25981-0
14KAAW13MPXS_01	OSPP160000000360000000000	AS08LMS	S24-25982-0
14KAAW13MPXS_99	OSPP160000000360000000000	AS08LX	S24-25983-0
14KAAW17MPN	OSPP160000000360300200000	AS08S	S24-25990-0
14KAAW17MPNS_02	OSPP160000000360300200000	AS08S71	S24-25992-0
14KAAW17MPX	OSPP160000000370000000000	AS08S71X	S24-25993-0
14KAAW17MPXS_01	OSPP160000000370000000000	AS08SX	S24-26206-0
14KAAW17MPXS_02	OSPP160000000375000000000	AS08ZL	S24-26207-0
14KAAW17MPXS_99	OSPP160000000375000000000	AS08ZL71	S24-26208-0
14KAAW21MPN	OSPP160000000380000000000	AS08ZLVIT	S24-26211-0
14KAAW21MPNS_02	OSPP160000000380000000000	AS08ZS	S24-26318-0
14KAAW21MPX	OSPP160000000380000B00000	AS09TF	S24-26339-0
14KAAW21MPXS_01	OSPP160000000380000B00000	AS-10	S24-26346-0
14KAAW21MPXS_99	OSPP160000000380003000000	AS-10	S24-26349-0
14KAIN13MPN	OSPP160000000380003000000	AS100HM001	S24-26350-0
14KAIN13MPX	OSPP160000000390000000000	AS100HM005	S24-26351-0
14KAIW13MPN	OSPP160000000390000000000	AS100MMB01	S24-26364-0
14KAIW13MPNS_06	OSPP160000000400000000000	AS10L	S24-26366-0
14KAIW13MPNS_07	OSPP160000000400000000000	AS10L71	S24-26370-0
14KAIW13MPNS_10	OSPP160000000040000000F000	AS10L71X	S24-26376-0
14KAIW13MPX	OSPP160000000040000000F000	AS10LMS	S24-26381-0
14KAIW13MPXS_02	OSPP160000000400000200000	AS10LSA4171X	S24-26384-0

14KAIW13MPXS_99	OSPP160000000400000200000	AS10LX	S24-26387-0
14KAIW17MPN	OSPP160000000400000600000	AS10S	S24-26480-0
14KAIW17MPNS_02	OSPP160000000400000600000	AS10S71	S24-26482-0
14KAIW17MPX	OSPP160000000400000E00000	AS10S71X	S24-26483-0
14KAIW17MPXS_02	OSPP160000000400000E00000	AS10SMS	S24-26484-0
14KAIW21MPN	OSPP160000000400001000000	AS10SX	S24-26486-0
14KAIW21MPNS_02	OSPP160000000400001000000	AS10ZL	S24-26487-0
14KAIW21MPX	OSPP160000000400003000000	AS10ZL71	S24-26490-0
14KAIW21MPXS_01	OSPP160000000400003000000	AS10ZS	S24-26492-0
14KAIW21MPXS_99	OSPP160000000400100000000	AS125HM001	S24-26498-0
14KATF06MPN	OSPP160000000400100000000	AS125HM005	S24-26499-0
14KATF06MPNS_02	OSPP160000000400101000000	AS12L	S24-26500-0
14KATF06MPNS_03	OSPP160000000400101000000	AS12L71	S24-26501-0
14KATF06MPX	OSPP160000000405000000000	AS12L71X	S24-26503-0
14KATF06MPXS	OSPP160000000405000000000	AS12LMS	S24-26509-0
14KATF06MPXS_01	OSPP160000000410000000000	AS12LSPH71	S24-26615-0
14KATF08MPN	OSPP160000000410000000000	AS12LX	S24-26619-0
14KATF08MPNS_02	OSPP160000000410000600000	AS12S	S24-26620-0
14KATF08MPX	OSPP160000000410000600000	AS12S71	S24-26621-0
14KATF08MPXS_01	OSPP160000000410003000000	AS12S71X	S24-26622-0
14KATF08MPXS_99	OSPP160000000410003000000	AS12SX	S24-26647-0
14KATF09MPN	OSPP160000000420000000000	AS12ZL	S24-26690-0
14KATF09MPNS_02	OSPP160000000420000000000	AS12ZL71	S24-26691-0
14KATF09MPX	OSPP160000000042000000F000	AS12ZS	S24-26853-0
14KATF09MPXS_01	OSPP160000000042000000F000	AS12ZS71	S24-26859-0
14KATF09MPXS_02	OSPP160000000420000200000	AS13	S24-30001-0
14KATF10MPN	OSPP160000000420000200000	AS14S	S24-30018-0
14KATF10MPNS_01	OSPP160000000420000E00000	AS14S71	S24-30049-0
14KATF10MPNS_03	OSPP160000000420000E00000	AS14S71X	S24-30058-0
14KATF10MPX	OSPP160000000420000E0F000	AS14SX	S24-30103-5
14KATF10MPXS_01	OSPP160000000420000E0F000	AS15L	S24-30105-0
14KATF10MPXS_99	OSPP160000000420003000000	AS15L71	S24-30108-0
14KATF13MPN	OSPP160000000420003000000	AS15L71X	S24-30109-0
14KATF13MPNS_02	OSPP160000000425000000000	AS15LX	S24-30117-0
14KATF13MPX	OSPP160000000425000000000	AS15ZL	S24-30119-0
14KATF13MPXS_01	OSPP160000000430000000000	AS15ZL71	S24-30139-0
14KEAK13MPN	OSPP160000000430000000000	AS160HM001	S24-30140-0
14KEAK13MPNS_01	OSPP160000000440000000000	AS160MMB02	S24-30141-0
14KEAK13MPNS_99	OSPP160000000440000000000	AS16S	S24-30143-0
14KEAK17MPN	OSPP160000000445000001000	AS16S71	S24-30145-0
14KEAK17MPNS_01	OSPP160000000445000001000	AS16S71X	S24-30147-0
14KEAK17MPNS_02	OSPP160000000450000000000	AS16SX	S24-30148-0
14KEAK21MPN	OSPP160000000450000000000	AS16ZS	S24-30149-0
14KEAK21MPNS	OSPP160000000045000000F000	AS16ZS71	S24-30150-0
14KEAK21MPNS_01	OSPP160000000045000000F000	AS18L	S24-30153-0
14KEAK21MPNS_02	OSPP160000000450000200000	AS18L71	S24-30155-0
14KEAK21MPNS_99	OSPP160000000450000200000	AS18L71X	S24-31222-0
14KEAW17MPNS	OSPP160000000450001000000	AS18LX	S24-31223-0
14KEAW21MPNS_01	OSPP160000000450001000000	AS18ZL	S24-31234-0
14KEIW13MPN	OSPP160000000450003000000	AS18ZL71	S24-31234-5
14KEIW13MPNS_03	OSPP160000000450003000000	AS200HM001	S24-31382-0
14KEIW13MPNS_99	OSPP160000000455000000000	AS20S	S24-33566-0
14KEIW17MPN	OSPP160000000455000000000	AS20S71	S24-33620-0

14KEIW17MPNS	OSPP160000000460000000000	AS20S71X	S24-33855-0
14KEIW17MPNS_01	OSPP160000000460000000000	AS20SX	S24-40005-0
14KEIW21MPN	OSPP160000000470000000000	AS20ZS	S24-40018-0
14KEIW21MPNS_01	OSPP160000000470000000000	AS20ZS71	S24-40026-0
14KEIW21MPNS_99	OSPP160000000480000000000	AS20ZSNBR71	S24-40027-0
14KETF06MPN	OSPP160000000480000000000	AS22101A-G24/35-WAD0011	S24-40028-0
14KETF06MPNS	OSPP160000000480000200000	AS22L	S24-40034-0
14KETF08MPN	OSPP160000000480000200000	AS22L71	S24-40057-0
14KETF08MPNS	OSPP160000000490000000000	AS22L71X	S24-40059-0
14KETF09MPN	OSPP160000000490000000000	AS22LX	S24-40061-0
14KETF09MPNS	OSPP160000000500000000000	AS22ZL	S24-40062-0
14KETF10MPN	OSPP160000000500000000000	AS22ZL71	S24-40063-0
14KETF10MPNS	OSPP160000000500000200000	AS2306-02-110	S24-40064-0
14KETF13MPN	OSPP160000000500000200000	AS2306-02-110	S24-40065-0
14KETF13MPNS	OSPP160000000500000B00000	AS2308-03-220	S24-40066-0
14MSC12N-316	OSPP160000000500000B00000	AS2308-03-220	S24-40068-5
14MSC16N-316	OSPP160000000500000E00000	AS2408-03-220	S24-40069-0
14MSEL12N-316	OSPP160000000500000E00000	AS2408-03-220	S24-40070-0
14N73-20-16-1P	OSPP160000000510001000000	AS2410-04-100K	S24-40072-0
14N73-20-20-1P	OSPP160000000510001000000	AS2410-04-100K	S24-40162-0
14N73-24-20-1P	OSPP160000000515000000000	AS2410-04-110K	S24-40164-0
14N73-24-24-1P	OSPP160000000515000000000	AS2410-04-110K	S24-40165-0
14N73-32-32-1P	OSPP160000000520000000000	AS25S	S24-40168-0
14N77-20-16	OSPP160000000520000000000	AS25S71	S24-40170-0
14N77-20-20	OSPP160000000530000000000	AS25S71X	S24-40172-0
14N77-24-20	OSPP160000000530000000000	AS25SX	S24-40173-0
14N78-20-16-1P	OSPP160000000540000000000	AS25ZS	S24-40178-0
14N78-20-20-1P	OSPP160000000540000000000	AS25ZS71	S24-40181-0
14N78-24-24-1P	OSPP160000000550000000000	AS26SF	S24-40183-0
14NS6-32-32	OSPP160000000550000000000	AS28L	S24-40184-0
14NU14-316	OSPP160000000550000200000	AS28L71	S24-40185-0
14P-0012	OSPP160000000550000200000	AS28L71X	S24-40187-0
14P-0013	OSPP160000000570000000000	AS28LX	S24-40187-5
14P1-101013011	OSPP160000000570000000000	AS28ZL	S24-40188-0
14P1-102013011	OSPP160000000595000000000	AS28ZL71	S24-40189-0
14P1-103013011	OSPP160000000595000000000	AS28ZLCF	S24-40189-5
14P1-104013011	OSPP160000000600000000000	AS30S	S24-40190-0
14P1-104023011	OSPP160000000600000000000	AS30S71	S24-40193-0
14P1-104033011	OSPP160000000060000000F000	AS30S71X	S24-40195-0
14P1-116013011	OSPP160000000060000000F000	AS30SX	S24-40196-5
14P1-118013011	OSPP160000000600000200000	AS30ZS	S24-40197-0
14P1-118023011	OSPP160000000600000200000	AS30ZS71	S24-40200-0
14P1-118033011	OSPP160000000060000020F000	AS310/70X2.9SA371	S24-40204-0
14P1-119013011	OSPP160000000060000020F000	AS310/70X2.9SA471X	S24-40205-0
14P1-119023011	OSPP160000000600000B00000	AS310/74X5.531BS	S24-40206-0
14P1-120013011	OSPP160000000600000B00000	AS310/74X5.5S	S24-40208-0
14P1-120013012	OSPP160000000600001000000	AS310/74X5.5SM	S24-40209-0
14P1-120023012	OSPP160000000600001000000	AS310/74X5.5SS	S24-40210-0
14P1-122013012	OSPP160000000620000000000	AS310/74X5.5SSM	S24-40211-0
14P1-122023012	OSPP160000000620000000000	AS310/74X5.5SU	S24-40212-0
14P1-123013012	OSPP160000000640000000000	AS312/76.1SA1271X	S24-40213-0
14-P-15-1	OSPP160000000640000000000	AS312/90X10S	S24-40214-0
14P2-103013011	OSPP160000000650000000000	AS312/90X10SM	S24-40218-0

14P2-116013011	OSPP160000000650000000000	AS312/90X10SS	S24-40220-0
14P2-118013011	OSPP160000000650000200000	AS312/90X10SSM	S24-40222-0
14P2-118023011	OSPP160000000650000200000	AS312/90X10SU	S24-40230-0
14P2-119013011	OSPP160000000650001000000	AS314/102X7S	S24-40234-5
14P2-120013012	OSPP160000000650001000000	AS314/102X7SM	S24-40235-0
14P2-120023012	OSPP160000000650003000000	AS314/102X7SS	S24-40236-0
14P2-122013012	OSPP160000000650003000000	AS314/102X7SU	S24-40237-0
14P2-122023012	OSPP160000000660000000000	AS316/115X8.5S	S24-40330-0
14-P-27	OSPP160000000660000000000	AS316/115X8.5SM	S24-40334-0
14-P-48	OSPP160000000670000000000	AS316/115X8.5SS	S24-40344-0
14-P-49	OSPP160000000670000000000	AS316/115X8.5SU	S24-40345-0
14-P-50	OSPP160000000680000000000	AS32/15X2S	S24-40357-0
14-P-54	OSPP160000000680000000000	AS32/15X2SM	S24-40365-0
14-P-66-1	OSPP160000000700000000000	AS32/15X2SU	S24-40375-0
14-P-66-2	OSPP160000000700000000000	AS32/16X3S	S24-40376-0
14-P-66-3	OSPP160000000070000000F000	AS32/16X3SM	S24-40379-0
14-P-68	OSPP160000000070000000F000	AS32/16X3SU	S24-40379-5
14-P-73-1	OSPP160000000700001000000	AS32/20X2.5SA571	S24-40383-0
14-P-73-2	OSPP160000000700001000000	AS32/21.3X2.6S	S24-40385-0
14-P-73-3	OSPP160000000700003000000	AS32/21.3X2.6SM	S24-40386-0
14-P-73-4	OSPP160000000700003000000	AS32/21.3X2.6SS	S24-40386-5
14-P-74-1	OSPP160000000715001000000	AS32/21.3X2.6SU	S24-40387-0
14-P-74-2	OSPP160000000715001000000	AS320/140X10S	S24-40513-0
14-P-74-3	OSPP160000000720001000000	AS320/140X10SM	S24-40515-0
14-P-74-4	OSPP160000000720001000000	AS320/140X10SS	S24-40517-0
14-P-74-5	OSPP160000000725000000000	AS320/140X10SSM	S24-40518-0
14-P-79-1	OSPP160000000725000000000	AS320/140X10SU	S24-40519-0
14-P-79-2	OSPP160000000740000000000	AS33/18X1.5S	S24-40520-0
14-P-79-3	OSPP160000000740000000000	AS33/18X1.5SM	S24-40521-0
14-P-79-4	OSPP160000000750000000000	AS33/18X1.5SU	S24-40523-0
14-P-80-1	OSPP160000000750000000000	AS33/20X3S	S24-40524-0
14-P-80-2	OSPP160000000750000200000	AS33/20X3SM	S24-40526-0
14-P-80-3	OSPP160000000750000200000	AS33/20X3SU	S24-40528-0
14-P-80-4	OSPP160000000790000000000	AS33/22X2S	S24-40638-0
14PA1-116001011	OSPP160000000790000000000	AS33/22X2SM	S24-40645-0
14PA1-122011012	OSPP160000000800000000000	AS33/22X2SU	S24-40766-0
14PA2-117011011	OSPP160000000800000000000	AS33/25X2.5SA771X	S24-40769-0
14PA2-122011012	OSPP160000000080000000F000	AS33/25X4	S24-40769-5
14R010FC1	OSPP160000000080000000F000	AS33/25X4S	S24-40770-0
14R010FC1	OSPP160000000800000200000	AS33/25X4SM	S24-40772-0
14R013FC	OSPP160000000800000200000	AS33/25X4SSM	S24-40821-0
14R013FC	OSPP160000000800000600000	AS33/25X4SU	S24-44516-0
14R013FC1	OSPP160000000800000600000	AS33/26.9X2.6S	S24-44517-0
14R013FC1	OSPP160000000810000000000	AS33/26.9X2.6SM	S24-44519-0
14R111FC1	OSPP160000000810000000000	AS33/26.9X2.6SS	S24-44520-0
14R111FC1	OSPP160000000830000000000	AS33/26.9X2.6SU	S24-44823-0
14R113FC	OSPP160000000830000000000	AS34/28X2S	S24-44824-0
14R113FC	OSPP160000000850001000000	AS34/28X2SM	S24-44973-0
14R113FC1	OSPP160000000850001000000	AS34/28X2SS	S24-45064-0
14R113FC1	OSPP160000000855000000000	AS34/28X2SU	S24-45065-0
14SC14-316	OSPP160000000855000000000	AS34/30X2.5SA471	S24-45107-0
14WMTXWLNMSS	OSPP160000000870000200000	AS34/30X3SA1271	S24-45110-0
15000-PSN	OSPP160000000870000200000	AS34/30X3SA1271X	S24-45299-0

15000-PSV	OSPP16000000087000020F000	AS34/30X3SA1371X	S24-45351-0
15010 RV	OSPP16000000087000020F000	AS34/30X4.5S	S24-45371-0
15010 RV	OSPP16000000890000000000	AS34/30X4.5SM	S24-45771-0
15010 RVUV	OSPP16000000890000000000	AS34/30X4.5SS	S24-45775-0
15010 RVUV	OSPP16000000900000000000	AS34/30X4.5SSM	S24-45785-0
15010 UV	OSPP16000000900000000000	AS34/30X4.5SU	S24-45786-0
15010 UV	OSPP16000000920000000000	AS34/30X4SS	S24-45787-0
15010 V	OSPP16000000920000000000	AS34/33.7X4S	S24-45789-0
15010 V	OSPP160000000920000M00000	AS34/33.7X4SM	S24-45795-0
15010-QC	OSPP160000000920000M00000	AS34/33.7X4SS	S24-45934-5
15010-QC	OSPP16000000950000000000	AS34/33.7X4SU	S24-49112-0
15011 V	OSPP16000000950000000000	AS35/25X3S	S24-49112-4
15011-QC	OSPP16000001000000000000	AS35/25X3SM	S24-49112-5
15011-QC	OSPP16000001000000000000	AS35/25X3SSM	S24-49212-0
150-137	OSPP16000000100000300F000	AS35/25X3SU	S24-49214-0
150-137	OSPP16000000100000300F000	AS35/30X4S	S24-49361-0
15020 RUV	OSPP16000001020000000000	AS35/30X4SM	S24-49389-0
15020 RUV	OSPP16000001020000000000	AS35/30X4SS	S24-49390-0
15020 RV	OSPP16000001050000000000	AS35/30X4SU	S24-49756-0
15020 RV	OSPP16000001050000000000	AS35/35X2S	S24-49758-0
15020 UV	OSPP16000001100000000000	AS35/35X2SM	S24-49820-0
15020 UV	OSPP16000001100000000000	AS35/35X2SS	S24-50140-0
15020 V	OSPP16000001115000000000	AS35/35X2SU	S24-50141-0
15020 V	OSPP16000001115000000000	AS35/38X2.5SA1471	S24-50142-0
15021 V	OSPP16000001125000200000	AS35/38X2.5SA1471X	S24-50146-0
15021FIL	OSPP16000001125000200000	AS35/38X2.5SA1571X	S24-50152-0
15021FIL	OSPP16000001125000201000	AS35/38X2.5SA871	S24-50154-0
1502FIL	OSPP16000001125000201000	AS35/38X2.5SA971X	S24-50156-0
1502FIL	OSPP16000001150000000000	AS35/38X4SA1771X	S24-50408-0
15038189+B	OSPP16000001150000000000	AS35/38X4SS	S24-50610-0
1504043/B80	OSPP16000001200000000000	AS35/38X5S	S24-50612-0
15054FIL	OSPP16000001200000000000	AS35/38X5SM	S24-50613-0
15054FIL	OSPP16000001270000200000	AS35/38X5SU	S24-50614-0
15071FIL	OSPP16000001270000200000	AS35/42.4X531BS	S24-50616-0
15071FIL	OSPP16000001300000000000	AS35/42.4X531BSM	S24-50620-0
15077FIL	OSPP16000001300000000000	AS35/42.4X5S	S24-50622-0
15077FIL	OSPP16000001470000000000	AS35/42.4X5SM	S24-51031-0
150-90	OSPP16000001470000000000	AS35/42.4X5SS	S24-51097-0
150-90	OSPP16000001500000000000	AS35/42.4X5SU	S24-51206-0
15093FIL	OSPP16000001500000000000	AS35/42X3SS	S24-51448-0
15093FIL	OSPP16000001510000200000	AS35L	S24-51515-0
15094FIL	OSPP16000001510000200000	AS35L71	S24-51520-0
15094FIL	OSPP16000001550000000000	AS35L71X	S24-51521-0
15095FIL	OSPP16000001550000000000	AS35LX	S24-51525-0
15095FIL	OSPP16000001600000000000	AS35ZL	S24-51566-0
15096FIL	OSPP16000001600000000000	AS35ZL71	S24-51569-0
15096FIL	OSPP16000001665003000000	AS36/38X4S	S24-51570-0
15097FIL	OSPP16000001665003000000	AS36/38X4SM	S24-51603-0
15097FIL	OSPP16000001675000000000	AS36/38X4SS	S24-51604-0
1509FIL	OSPP16000001675000000000	AS36/38X4SU	S24-51605-0
1509FIL	OSPP16000001690000000000	AS36/42X3S	S24-51616-0
150BF5533	OSPP16000001690000000000	AS36/42X3SM	S24-51624-0
150F5533	OSPP16000001750000000000	AS36/42X3SS	S24-58080-0

150UF5533	OSPP160000001750000000000	AS36/42X3SSM	S24-58088-0
150V5072	OSPP160000001800000000000	AS36/42X3SU	S24-58090-0
15102FIL	OSPP160000001800000000000	AS36/44.5X2.6SA1171	S24-58170-0
15102FIL	OSPP160000001800001000000	AS36/44.5X2.6SA1271X	S24-58178-0
15155FIL	OSPP160000001800001000000	AS36/44.5X2.6SA1371	S24-58890-0
15155FIL	OSPP160000001860000000000	AS36/44.5X2.6SA1371X	S24-58894-0
15166FIL	OSPP160000001860000000000	AS36/44.5X2.6SA1471X	S24-58901-5
15166FIL	OSPP160000001870000200000	AS36/48.3X5S	S24-58904-0
15178FIL	OSPP160000001870000200000	AS36/48.3X5SM	S24-58905-0
15178FIL	OSPP160000001890000000000	AS36/48.3X5SS	S24-58906-0
1517FIL	OSPP160000001890000000000	AS36/48.3X5SSM	S24-58919-0
1517FIL	OSPP160000001895000000000	AS36/48.3X5SU	S24-58921-0
15188FIL	OSPP160000001895000000000	AS38/50X6S	S24-58937-0
15188FIL	OSPP160000001900000000000	AS38/50X6SM	S24-58940-0
1518FIL	OSPP160000001900000000000	AS38/50X6SU	S24-58996-0
1518FIL	OSPP160000002000000000000	AS38/57X2.9SA1271X	S24-59005-0
15191FIL	OSPP160000002000000000000	AS38/62X7.5S	S24-59006-0
15191FIL	OSPP160000002050000000000	AS38/62X7.5SM	S24-59009-0
15197FIL	OSPP160000002050000000000	AS38/62X7.5SS	S24-59011-0
15197FIL	OSPP160000002150000000000	AS38/62X7.5SSM	S24-59013-0
1521FIL	OSPP160000002150000000000	AS38/62X7.5SU	S24-59014-0
1521FIL	OSPP160000002320000000000	AS38/62X7.5VITSM	S24-59019-0
15227FIL	OSPP160000002320000000000	AS38/65X6	S24-59037-0
15227FIL	OSPP160000003000000000000	AS38/65X8S	S24-59490-0
15229FIL	OSPP160000003000000000000	AS38/65X8SM	S24-59492-0
15229FIL	OSPP160000004000100000000	AS38/65X8SS	S24-59725-0
15231FIL	OSPP160000004000100000000	AS38/65X8SSM	S24-59751-0
15231FIL	OSPP160000004450000000000	AS38/65X8SU	S24-59832-0
15235FIL	OSPP160000004450000000000	AS38S	S24-59907-0
15235FIL	OSPP160000004500000000000	AS38S71	S24-59955-0
15242FIL	OSPP160000004500000000000	AS38S71X	S24-63325-0
15242FIL	OSPP160000006000000000000	AS38SX	S24-63372-0
15245FIL	OSPP160000006000000000000	AS38ZS	S24-63378-0
15245FIL	OSPP160000100140000200000	AS38ZSNBR71	S24-63394-0
15247-00665	OSPP160000100140000200000	AS42L	S24-63463-0
15247-00665	OSPP160000100165000000000	AS42L71	S24-63464-0
15247-00800	OSPP160000100165000000000	AS42L71X	S24-63466-0
15247-00800	OSPP160000100200000000000	AS42LX	S24-63498-5
15247-00900	OSPP160000100200000000000	AS42ZL	S24-63502-0
15247-00900	OSPP160000100220000000000	AS42ZL71	S24-63503-0
15247-01500	OSPP160000100220000000000	AS52SF	S24-63709-0
15247-01500	OSPP160000100340000E00000	AS-6	S24-63801-0
15247-01800	OSPP160000100340000E00000	AS-6	S24-63898-0
15247-01800	OSPP160000100380000000000	AS610/73X14S	S24-63950-0
15247-02000	OSPP160000100380000000000	AS610/73X14SM	S24-64379-0
15247-02000	OSPP160000100500000000000	AS610/73X14SS	S24-64432-0
15248-00500	OSPP160000100500000000000	AS610/73X14SSM	S24-64498-0
15248-00500	OSPP160000100500100200000	AS612/88.6X16S	S24-64750-0
15248-00510	OSPP160000100500100200000	AS612/88.6X16SM	S24-64883-0
15248-00510	OSPP160000100555000000000	AS612/88.6X16SS	S24-68034-0
15248-00710	OSPP160000100555000000000	AS6159	S24-68222-0
15248-00710	OSPP160000100700100200000	AS62/16X3S	S24-68602-0
15248-00770	OSPP160000100700100200000	AS62/16X3SM	S24-68650-0

15248-00770	OSPP160000100800000000000	AS62/16X3SSM	S24-68685-0
15248-01000	OSPP160000100800000000000	AS62/16X3SU	S24-68881-0
15248-01000	OSPP160000101000000000000	AS62/21.3X3.2S	S24-68883-0
15248-01376	OSPP160000101000000000000	AS62/21.3X3.2SM	S24-68966-0
15248-01376	OSPP160001000080000000000	AS62/21.3X3.2SS	S24-68967-0
15248-01670	OSPP160001000080000000000	AS62/21.3X3.2SU	S24-69060-0
15248-01670	OSPP160001000130000000000	AS63/16X3S	S24-69061-0
15248-02620	OSPP160001000130000000000	AS63/16X3SM	S24-69062-0
15248-02620	OSPP160001000150000000000	AS63/16X3SU	S24-69066-0
15248-06220	OSPP160001000150000000000	AS63/20X4S	S24-69070-0
15248-06220	OSPP160001000150000200000	AS63/20X4SM	S24-69071-0
15249-00624	OSPP160001000150000200000	AS63/20X4SU	S24-69073-0
15249-00624	OSPP160001000160000200000	AS63/25X5S	S24-69073-5
15249-00650	OSPP160001000160000200000	AS63/25X5SM	S24-69565-0
15249-00650	OSPP160001000180000000000	AS63/25X5SS	S24-69588-0
15249-01100	OSPP160001000180000000000	AS63/25X5SSM	S24-69656-0
15249-01100	OSPP160001000200000000000	AS63/25X5SU	S24-69822-0
15249-01324	OSPP160001000200000000000	AS63/26.9X4S	S24-72351-0
15249-01324	OSPP160001000200101000000	AS63/26.9X4SM	S24-72354-0
15249-01440	OSPP160001000200101000000	AS63/26.9X4SS	S24-72357-0
15249-01440	OSPP160001000210000000000	AS63/26.9X4SSM	S24-72358-0
15249-01720	OSPP160001000210000000000	AS63/26.9X4SU	S24-72360-0
15249-01720	OSPP160001000210000200000	AS64/25X5S	S24-72466-0
15249-02282	OSPP160001000210000200000	AS64/25X5SM	S24-72700-0
15249-02282	OSPP160001000220000000000	AS64/25X5SS	S24-72701-0
15249-02300	OSPP160001000220000000000	AS64/25X5SU	S24-72704-0
15249-02300	OSPP160001000245000000000	AS64/30X4S	S24-72705-0
15249-02319	OSPP160001000245000000000	AS64/30X4SM	S24-72833-0
15249-02319	OSPP160001000025000000F000	AS64/30X4SS	S24-72839-0
15249-02380	OSPP160001000025000000F000	AS64/30X4SSM	S24-72881-0
15249-02380	OSPP160001000270000000000	AS64/30X4SU	S24-72950-0
15249-02392	OSPP160001000270000000000	AS64/30X6S	S24-73946-0
15249-02392	OSPP160001000300000000000	AS64/30X6SM	S24-76316-0
15249-02409	OSPP160001000300000000000	AS64/30X6SU	S24-76316-5
15249-02409	OSPP160001000300101000000	AS64/33.7X6.3S	S24-76318-5
15249-02471	OSPP160001000300101000000	AS64/33.7X6.3SM	S24-76320-5
15249-02471	OSPP160001000033000000F000	AS64/33.7X6.3SS	S24-76322-0
15249-03000	OSPP160001000033000000F000	AS64/33.7X6.3SSM	S24-76323-0
15249-03000	OSPP160001000350000000000	AS64/33.7X6.3SU	S24-76324-0
15249FIL	OSPP160001000350000000000	AS65/30X4S	S24-76326-0
15249FIL	OSPP160001000350000200000	AS65/30X4SM	S24-76328-5
15251-00500	OSPP160001000350000200000	AS65/30X4SU	S24-76330-0
15251-00500	OSPP160001000400000000000	AS65/30X6S	S24-76462-0
15256-00330	OSPP160001000400000000000	AS65/30X6SM	S24-76463-0
15256-00330	OSPP160001000400101000000	AS65/30X6SU	S24-76559-0
15265-02305	OSPP160001000400101000000	AS65/38X5S	S24-76563-0
15265-02305	OSPP160001000450000000000	AS65/38X5SM	S24-76750-0
15266-00500	OSPP160001000450000000000	AS65/38X5SSM	S24-76916-0
15266-00500	OSPP160001000454000000000	AS65/38X5SU	S24-76963-0
15266-00700	OSPP160001000454000000000	AS65/38X8S	S24-76966-0
15266-00700	OSPP160001000500000000000	AS65/38X8SM	S24-76973-0
15266-00720	OSPP160001000500000000000	AS65/38X8SS	S24-76975-0
15266-00720	OSPP160001000540000000000	AS65/38X8SSM	S24-76977-0

15266-00760	OSPP160001000540000000000	AS65/38X8SU	S24-76978-0
15266-00760	OSPP160001000550000000000	AS65/42.4X6.3S	S24-76979-0
15266-01370	OSPP160001000550000000000	AS65/42.4X6.3SM	S24-76981-0
15266-01370	OSPP160001000600000000000	AS65/42.4X6.3SS	S24-76983-0
15266-01688	OSPP160001000600000000000	AS65/42.4X6.3SSM	S24-76986-0
15266-01688	OSPP160001000610000200000	AS65/42.4X6.3SU	S24-77191-0
15266-03900	OSPP160001000610000200000	AS66/38X5S	S24-77192-0
15266-03900	OSPP160001000670000000000	AS66/38X5SM	S24-77204-0
15266-06000	OSPP160001000670000000000	AS66/38X5SSM	S24-77206-0
15266-06000	OSPP160001000800000000000	AS66/38X5SU	S24-77229-0
15267-00800	OSPP160001000800000000000	AS66/38X8S	S24-77236-0
15267-00800	OSPP160001000900000000000	AS66/38X8SM	S24-77378-0
15267-01000	OSPP160001000900000000000	AS66/38X8SU	S24-77435-0
15267-01000	OSPP160001001000000200000	AS66/48.3X8.8S	S24-77459-0
15267-01350	OSPP160001001000000200000	AS66/48.3X8S	S24-77460-0
15267-01350	OSPP160001001000000600000	AS66/48.3X8SM	S24-77579-0
15267-01600	OSPP160001001000000600000	AS66/48.3X8SS	S24-77581-0
15267-01600	OSPP160001001000200000000	AS66/48.3X8SSM	S24-77587-0
15267-01700	OSPP160001001000200000000	AS66/48.3X8SU	S24-77589-0
15267-01700	OSPP160001001510000000000	AS68/50X9S	S24-77593-0
15267-01850	OSPP160001001510000000000	AS68/50X9SM	S24-77675-0
15267-01850	OSPP160001100235000000000	AS68/50X9SU	S24-77679-0
15267-01900	OSPP160001100235000000000	AS68/60.3X10S	S24-77682-0
15267-01900	OSPP160001100485000000000	AS68/60.3X10SM	S24-77683-0
15267-02000	OSPP160001100485000000000	AS68/60.3X10SS	S24-77685-0
15267-02000	OSPP160001101250000000000	AS68/60.3X10SSM	S24-77687-0
15267-02050	OSPP160001101250000000000	AS68/60.3X10SU	S24-77689-0
15267-02050	OSPP160010000130000000000	AS68/65X8S	S24-77691-0
15267-04592	OSPP160010000130000000000	AS68/65X8SM	S24-77692-0
15267-04592	OSPP160010000155000000000	AS68/65X8SS	S24-77693-0
15267-07480	OSPP160010000155000000000	AS68/65X8SU	S24-77836-5
15267-07480	OSPP160010000165000005000	ASA04571X	S24-90002-0
15268-02000	OSPP160010000165000005000	ASA0X	S24-90010-0
15268-02000	OSPP160010000205000000000	ASA24571X	S24-90017-0
15268-06900	OSPP160010000205000000000	ASA2X	S24-90018-0
15268-06900	OSPP160010000225000005000	ASA34571X	S24-90236-0
15271-00700	OSPP160010000225000005000	ASA3X	S24-90571-0
15271-00700	OSPP160010000230000000000	ASA44571X	S24-90572-0
15271-00710	OSPP160010000230000000000	ASA4X	S24-90574-0
15271-00710	OSPP160010000270000000000	ASA54571X	S24-90576-0
15271-00780	OSPP160010000270000000000	ASA5X	S24-90578-0
15271-00780	OSPP160010000350000000000	ASA64571X	S24-90580-0
15271-00800	OSPP160010000350000000000	ASA6X	S24-90582-0
15271-00800	OSPP160010000650000000000	AS-B-11	S24-90586-0
15271-01200	OSPP160010000650000000000	AS-B-13	S24-90588-0
15271-01200	OSPP160010001000000000000	AS-B-15	S24-90762-0
15271-01365	OSPP160010001000000000000	AS-B-17	S24-90763-0
15271-01365	OSPP160010100600000000000	AS-B-19	S24-90764-0
15271-01370	OSPP160010100600000000000	AS-B-22	S24-90775-0
15271-01370	OSPP160012000150003000000	ASB24571X	S24-90823-0
15271-01450	OSPP160012000150003000000	AS-B-27	S24-91004-0
15271-01450	OSPP160012000165000000000	ASB2X	S24-92643-0
15271-01800	OSPP160012000165000000000	AS-B-33	S24-92907-0

15271-01800	OSPP160012000165000005000	ASB34571X	S24-93779-0
15271-02200	OSPP160012000165000005000	AS-B-37	S24-93897-0
15271-02200	OSPP160012000210003000000	ASB3X	S24-94046-0
15271-02965	OSPP160012000210003000000	ASB44571X	S24-94233-0
15271-02965	OSPP160012000230000200000	ASB4X	S24-94579-0
15271-03150	OSPP160012000230000200000	ASB54571X	S24-94748-0
15271-03150	OSPP160012000230003000000	AS-B-58	S2502
15271-03624	OSPP160012000230003000000	ASB5X	S25M17S1UN
15271-03624	OSPP160012000370003000000	ASC14571X	S25M25S1UN
15271-04025	OSPP160012000370003000000	ASC1VZX	S260049
15271-04025	OSPP160012000650000000000	ASC1X	S26-20114-0
15271-06000	OSPP160012000650000000000	ASC24571X	S26-20119-0
15271-06000	OSPP160012000650900000000	ASC2VZX	S26-20138-0
15272-00800	OSPP160012000650900000000	ASC2X	S26-20468-0
15272-00800	OSPP160012100400000000000	ASC34571X	S26-20468-5
15272-01300	OSPP160012100400000000000	ASC3VZX	S26-20584-0
15272-01300	OSPP160012100430000000000	ASC3X	S26-20652-0
15272-01600	OSPP160012100430000000000	ASC44571X	S26-20768-0
15272-01600	OSPP160012100430001000000	ASC4VZX	S26-20834-0
15272-01712	OSPP160012100430001000000	ASC4X	S26-20908-0
15272-01712	OSPP160100000135000000000	ASC5X	S26-20973-0
15272-01825	OSPP160100000135000000000	ASC6X	S26-21669-0
15272-01825	OSPP160100000190000000000	ASC7X	S26-21697-0
15272-01900	OSPP160100000190000000000	ASC8X	S26-21698-0
15272-01900	OSPP160100000220000000000	ASG-1	S26-21699-0
15272-02000	OSPP160100000220000000000	ASG310/74X5.531BS	S26-21970-0
15272-02000	OSPP160100000260000000000	ASG310/74X5.5S	S26-22600-0
15272-02500	OSPP160100000260000000000	ASG310/74X5.5SS	S26-22600-5
15272-02500	OSPP160100000260001000000	ASG312/90X10S	S26-22611-0
15272-02730	OSPP160100000260001000000	ASG312/90X10SS	S26-22658-0
15272-02730	OSPP160100000300000000000	ASG314/102X7S	S26-22774-0
15272-03150	OSPP160100000300000000000	ASG314/102X7SS	S26-22865-0
15272-03150	OSPP160100000324000000000	ASG316/115X8.5S	S26-22865-5
15272-04000	OSPP160100000324000000000	ASG316/115X8.5SS	S26-23550-0
15272-04000	OSPP160100000357000000000	ASG32/15X2S	S26-23954-0
15272-04592	OSPP160100000357000000000	ASG32/16X3S	S26-24010-0
15272-04592	OSPP160100000363000000000	ASG32/21.3X2.6S	S26-24027-0
15272-04700	OSPP160100000363000000000	ASG32/21.3X2.6SS	S26-24071-5
15272-04700	OSPP160100000380000000000	ASG320/140X10S	S26-24479-0
15272-07480	OSPP160100000380000000000	ASG320/140X10SS	S26-24527-0
15272-07480	OSPP160100000400000000000	ASG33/18X1.5S	S26-24784-0
15272-07700	OSPP160100000400000000000	ASG33/20X3S	S26-24927-5
15272-07700	OSPP160100000402000000000	ASG33/22X2S	S26-27156-0
15273-01650	OSPP160100000402000000000	ASG33/25X4S	S26-27184-0
15273-01650	OSPP160100000442000000000	ASG33/26.9X2.6S	S26-27421-0
15273-01710	OSPP160100000442000000000	ASG33/26.9X2.6SS	S26-27421-5
15273-01710	OSPP160100000442000600000	ASG34/28X2S	S26-27423-0
15273-06900	OSPP160100000442000600000	ASG34/30X4.5S	S26-27707-0
15273-06900	OSPP160100000480000000000	ASG34/30X4SS	S26-27707-5
15277FIL	OSPP160100000480000000000	ASG34/33.7X4S	S26-27711-0
15277FIL	OSPP160100000600000000000	ASG34/33.7X4SS	S26-27724-0
15280FIL	OSPP160100000600000000000	ASG35/25X3S	S26-27861-0
15280FIL	OSPP160100000700000000000	ASG35/30X4S	S26-28073-0

15287FIL	OSPP160100000700000000000	ASG35/30X4SS	S26-28250-0
15287FIL	OSPP16010000175000000F000	ASG35/35X2S	S26-28251-0
15288FIL	OSPP16010000175000000F000	ASG35/35X2SS	S26-28257-0
15288FIL	OSPP160100002050000000000	ASG35/38X4SS	S26-28352-5
15293FIL	OSPP160100002050000000000	ASG35/38X5S	S26-28453-0
15293FIL	OSPP160100002950000000000	ASG35/42.4X5S	S26-28700-0
152R10	OSPP160100002950000000000	ASG35/42.4X5SS	S26-28728-0
152R30	OSPP160100100300000000000	ASG35/42X3SS	S26-29632-0
15333-03010	OSPP160100100300000000000	ASG36/38X4S	S26-29633-0
15333-03010	OSPP160100100400000000000	ASG36/38X4SS	S26-29635-0
15354FIL	OSPP160100100400000000000	ASG36/42X3S	S26-29644-0
15354FIL	OSPP160101000525000000000	ASG36/42X3SS	S26-29646-0
15357FIL	OSPP160101000525000000000	ASG36/48.3X5S	S26-29654-0
15357FIL	OSPP16010100052500000F000	ASG36/48.3X5SS	S26-29658-0
1539FIL	OSPP16010100052500000F000	ASG38/50X6S	S26-29786-0
1539FIL	OSPP160110000205000000000	ASG38/62X7.531BS	S26-32576-0
15404FIL	OSPP160110000205000000000	ASG38/62X7.5S	S26-32577-0
15404FIL	OSPP160110001815000000000	ASG38/62X7.5SS	S26-32578-0
15415FIL	OSPP160110001815000000000	ASG38/65X8S	S26-32578-5
15415FIL	OSPP160110102100000000000	ASG610/73X14S	S26-32579-0
15418FIL	OSPP160110102100000000000	ASG610/73X14SS	S26-32580-0
15418FIL	OSPP160110104000000000000	ASG612/88.6X16S	S26-32580-5
15419FIL	OSPP160110104000000000000	ASG612/88.6X16SS	S26-32581-0
15419FIL	OSPP160200000300000000000	ASG62/16X3S	S26-32581-5
15446-01370	OSPP160200000300000000000	ASG62/16X3SS	S26-32582-0
15446-01370	OSPP16020000030000000F000	ASG62/21.3X3.2S	S26-32582-5
15446-02965	OSPP16020000030000000F000	ASG62/21.3X3.2SS	S26-32583-0
15446-02965	OSPP160200000375000000000	ASG63/16X3S	S26-32583-5
154753-01	OSPP160200000375000000000	ASG63/20X4S	S26-32584-0
15496FIL	OSPP160200000400000000000	ASG63/20X4SS	S26-32584-5
15496FIL	OSPP160200000400000000000	ASG63/25X5S	S26-32588-0
15498FIL	OSPP160200000600000000000	ASG63/26.9X4S	S26-32589-0
15498FIL	OSPP160200000600000000000	ASG63/26.9X4SS	S26-32591-0
1551FIL	OSPP160200000800000000000	ASG64/25X5S	S26-32593-0
1551FIL	OSPP160200000800000000000	ASG64/30X4S	S26-32593-5
15520-01370	OSPP160201000280000000000	ASG64/30X4SS	S26-32595-0
15520-01370	OSPP160201000280000000000	ASG64/30X6S	S26-32595-5
15520-03900	OSPP160201000500000000000	ASG64/33.7X6.3S	S26-34142-0
15520-03900	OSPP160201000500000000000	ASG64/33.7X6.3SS	S26-34301-0
15521-00650	OSPP161000000211000000000	ASG65/30X4S	S26-34302-0
15521-00650	OSPP161000000211000000000	ASG65/30X6S	S26-34467-0
15521-01300	OSPP161000000500000000000	ASG65/38X5S	S26-34748-0
15521-01300	OSPP161000000500000000000	ASG65/38X5SS	S26-34859-0
15526FIL	OSPP164000000250000000000	ASG65/38X8S	S26-35172-0
15526FIL	OSPP164000000250000000000	ASG65/42.4X6.3S	S26-35237-0
15527FIL	OSPP164700100650000000000	ASG65/42.4X6.3SS	S26-35237-5
15527FIL	OSPP164700100650000000000	ASG66/38X5S	S26-36113-H
15528FIL	OSPP164701100080000000000	ASG66/38X8S	S26-36270-A
15528FIL	OSPP164701100080000000000	ASG66/48.3X8.8S	S26-36273-H
15534FIL	OSPP164710100130000000000	ASG66/48.3X8S	S26-36788-0
15534FIL	OSPP164710100130000000000	ASG66/48.3X8SS	S26-36789-0
15536FIL	OSPP166000000250000200000	ASG68/50X9S	S26-36790-0
15536FIL	OSPP166000000250000200000	ASG68/50X9SS	S26-36844-H

15547FIL	OSPP16600000520000000000	ASG68/60.3X10S	S26-36930-0
15547FIL	OSPP16600000520000000000	ASG68/60.3X10SS	S26-36934-0
15550FIL	OSPP16600100200000000F000	ASG68/65X8S	S26-41000-0L
15550FIL	OSPP16600100200000000F000	ASH-06-2	S26-41020-0
15583FIL	OSPP16600110090000000000	ASK06X1.571X	S26-41076-0
15583FIL	OSPP16600110090000000000	ASK06X1.5SA171X	S26-41099-0
15587FIL	OSPP16600110100000000000	ASK08X1.571X	S26-41261-0
15587FIL	OSPP16600110100000000000	ASK08X1.5SA171X	S26-41265-H
15590FIL	OSPP16C000000050000000000	ASK10X1.5SA371X	S26-41311-H
15590FIL	OSPP16C000000050000000000	ASK10X1.5X	S26-41368-0
155FIL	OSPP16C000000090000000000	ASK10X271X	S26-41368-5
155FIL	OSPP16C000000090000000000	ASK12X1.571X	S26-41425-0
15665FIL	OSPP16C000000130000000000	ASK12X1.5SA371X	S26-41851-0
15665FIL	OSPP16C000000130000000000	ASK12X271X	S26-41887-0
156912-01	OSPP16C000000140000000000	ASK14X2SA371X	S26-41887-5
1569FIL	OSPP16C000000140000000000	ASK14X2SA471X	S26-41891-0
1569FIL	OSPP16C000000150000000000	ASK15X271X	S26-41961-0
156FIL	OSPP16C000000150000000000	ASK16X1.5S	S26-41970-0
156FIL	OSPP16C000000160000000000	ASK16X271	S26-41972-0
1571FIL	OSPP16C000000160000000000	ASK16X271X	S26-42052-0
1571FIL	OSPP16C000000177000000000	ASK16X2SA371X	S26-42052-5
15734FIL	OSPP16C000000177000000000	ASK20X2.571	S26-42101-0
15734FIL	OSPP16C000000180000000000	ASK20X2.571X	S26-42221-0
15749FIL	OSPP16C000000180000000000	ASK20X2.5SA271X	S26-42265-4
15749FIL	OSPP16C000000200000000000	ASK20X33.7X3X	S26-42265-5
15757FIL	OSPP16C000000200000000000	ASK20X371X	S26-42325-0
15757FIL	OSPP16C000000210000000000	ASK22X271	S26-42498-H
15801FIL	OSPP16C000000210000000000	ASK22X271X	S26-42516-0
15801FIL	OSPP16C000000225000000000	ASK25X2.5SA271X	S26-42683-0
15803FIL	OSPP16C000000225000000000	ASK25X2.5SA471X	S26-42685-0
15803FIL	OSPP16C000000240000000000	ASK25X371	S26-42685-5
15804FIL	OSPP16C000000240000000000	ASK25X371X	S26-42740-0
15804FIL	OSPP16C000000250000000000	ASK25X3X	S26-42741-0
15806FIL	OSPP16C000000250000000000	ASK28X271X	S26-42791-0
15806FIL	OSPP16C000000250000C00000	ASK30X2.5SA271X	S26-42999-0
15808FIL	OSPP16C000000250000C00000	ASK30X3SA471X	S26-43637-0
15808FIL	OSPP16C000000255000000000	ASK30X471	S26-43741-0
15810FIL	OSPP16C000000255000000000	ASK30X471X	S26-43903-0
15810FIL	OSPP16C000000258000000000	ASK30X4X	S26-46353-0
15827FIL	OSPP16C000000258000000000	ASK30X571X	S26-47129-H
15827FIL	OSPP16C000000300000000000	ASK35X2.571X	S26-47427-0
15828FIL	OSPP16C000000300000000000	ASK38X2.571X	S26-47427-5
15828FIL	OSPP16C000000340000000000	ASK38X2.5SA471X	S26-47529-0
15830FIL	OSPP16C000000340000000000	ASK38X471	S26-47683-0
15830FIL	OSPP16C000000350000000000	ASK38X471X	S26-47916-0
15875FIL	OSPP16C000000350000000000	ASK38X4SA171X	S26-47982-0
15875FIL	OSPP16C000000350260C00000	ASK38X4SA571X	S26-48048-0
15886FIL	OSPP16C000000350260C00000	ASK38X671X	S26-48169-0
15886FIL	OSPP16C000000380000000000	ASK42X371	S26-48170-0
15924FIL	OSPP16C000000380000000000	ASK42X371X	S26-48172-0
15924FIL	OSPP16C000000390000000000	ASK510X1.5STL171	S26-48173-0
15926-10-12-PT	OSPP16C000000390000000000	ASK512X1.5STL271	S26-48174-0
15926-8-8-PT	OSPP16C000000400000000000	ASK610X1.5S	S26-48178-0

15930FIL	OSPP16C000000400000000000	ASK610X1.5S71	S26-48178-5
15930FIL	OSPP16C000000450000000000	ASK610X2S71	S26-48180-0
1593FIL	OSPP16C000000450000000000	ASK612X1.5S	S26-48180-5
1593FIL	OSPP16C000000450100000000	ASK612X1.5S71	S26-48211-0
15942FIL	OSPP16C000000450100000000	ASK612X2.5S	S26-48221-0
15942FIL	OSPP16C000000460000000000	ASK612X2.5S71	S26-48323-0
15943FIL	OSPP16C000000460000000000	ASK612X2S	S26-48750-0
15943FIL	OSPP16C000000470000000000	ASK612X2S71	S26-52061-0
15974FIL	OSPP16C000000470000000000	ASK612X2SVIT	S26-52133-0
15974FIL	OSPP16C000000500000000000	ASK616X2.5S	S26-52324-0
1598FIL	OSPP16C000000500000000000	ASK616X2.5S71	S26-52324-5
1598FIL	OSPP16C000000505000000000	ASK616X2S	S26-52354-5
15BAFM6FP8	OSPP16C000000505000000000	ASK616X2S71	S26-52455-H
15BAMJ4FL4	OSPP16C000000545000000000	ASK616X3S	S26-52560-0
15BAMP4FM4	OSPP16C000000545000000000	ASK616X3S71	S26-53142-0
15BAMP6FM6	OSPP16C000000550000000000	ASK620X2.5S	S26-53216-0
15BF12Q	OSPP16C000000550000000000	ASK620X2.5S71	S26-53256-0
15BF2211	OSPP16C000000620000000000	ASK620X2.5SVIT	S26-53312-0
15BF4488	OSPP16C000000620000000000	ASK620X2S	S26-53511-0
15BF44QQ	OSPP16C000000630000000000	ASK620X2S71	S26-53519-H
15BF6688	OSPP16C000000630000000000	ASK620X3S	S26-53521-0
15BF66QQ	OSPP16C000000650000000000	ASK620X3S71	S26-53802-0
15BF99QQ	OSPP16C000000650000000000	ASK620X3SVIT	S26-53802-5
15CN102QBM3KG121	OSPP16C000000665000000000	ASK620X4S	S26-53808-0
15CN102QEBM3GS124	OSPP16C000000665000000000	ASK620X4S71	S26-53809-0
15CN102QEVM3KG164	OSPP16C00000067000000F000	ASK625X3S	S26-53809-5
15CN102QEVT1KG164	OSPP16C00000067000000F000	ASK625X3S71	S26-53912-0
15CN105QBM3GG121	OSPP16C000000700000000000	ASK625X3SVIT	S26-53919-0
15CN105QBM3KG121	OSPP16C000000700000000000	ASK625X4S	S26-55809-0
15CN105QBM3KG161	OSPP16C00000070000000F000	ASK625X4S71	S26-55811-0
15CN105QBPKG121	OSPP16C00000070000000F000	ASK625X5S	S26-55823-0
15CN105QBT1KG124	OSPP16C000000750000000000	ASK625X5S71	S26-55828-0
15CN105QEVM3KG124	OSPP16C000000750000000000	ASK630X3S	S26-55836-0
15CN105QHVPKG122	OSPP16C000000780000000000	ASK630X3S71	S26-55889-0
15CN105QVM3KG121	OSPP16C000000780000000000	ASK630X4S	S26-55922-0
15CN105QVPKG121	OSPP16C000000800000000000	ASK630X4S71	S26-55945-0
15CN105QVPKG124	OSPP16C000000800000000000	ASK630X5S	S26-55947-0
15CN105QVT1GG121	OSPP16C000000950000000000	ASK630X5S71	S26-55966-0
15CN1-104062011	OSPP16C000000950000000000	ASK638X4S	S26-55966-5
15CN110QBM3GG121	OSPP16C000000960000000000	ASK638X4S71	S26-55967-0
15CN110QBM3GG161	OSPP16C000000960000000000	ASK638X5S	S26-55968-0
15CN110QBM3GM271	OSPP16C000001000000000000	ASK638X5S71	S26-55978-0
15CN110QBM3KG121	OSPP16C000001000000000000	ASK638X6S	S26-55979-5
15CN110QBM3KG161	OSPP16C000001200000000000	ASK638X6S71	S26-55980-0
15CN110QBNGG121	OSPP16C000001200000000000	ASK638X7S	S26-58015-0
15CN110QBPKG161	OSPP16C000001860000000000	ASK642X371	S26-58016-0
15CN110QBPKS121	OSPP16C000001860000000000	ASKR25S33.4X4.571	S26-58030-S
15CN110QBT1KG121	OSPP16C000002000000000000	ASL100-02SNP	S26-58053-0
15CN110QBT1KG161	OSPP16C000002000000000000	ASL150-02SNP	S26-58087-0
15CN110QEVM3KG124	OSPP16C000002200000000000	ASL15-01SNPV	S26-58096-0
15CN110QEVM3KG164	OSPP16C000002200000000000	ASL25-02SNPV	S26-58117-0
15CN110QEVPKG164	OSPP16C001000165000000000	ASL310/70X7.5S	S26-58157-0
15CN110QEVT1GG124	OSPP16C001000165000000000	ASL310/70X7.5SM	S26-58159-0

15CN110QEVT1KG124	OSPP16C001000225000000000	ASL310/70X7.5SS	S26-58241-0
15CN110QEVT1KG164	OSPP16C001000225000000000	ASL310/70X7.5SU	S26-58284-0
15CN110QHBNKG121S07	OSPP16C010000350000000000	ASL312/80X6S	S26-58285-0
15CN110QVM3GG121	OSPP16C010000350000000000	ASL312/80X6SM	S26-58296-H
15CN110QVM3KG121	OSPP16C010000400000000000	ASL312/80X6SS	S26-58315-0
15CN110QVT1GG121	OSPP16C010000400000000000	ASL312/80X6SU	S26-58322-H
15CN1-112062012	OSPP16C010000460000000000	ASL314/100X6S	S26-58347-G
15CN120QBM3GG121	OSPP16C010000460000000000	ASL314/100X6SM	S26-58347-H
15CN120QBM3KG121	OSPP16C010000500000000000	ASL314/100X6SS	S26-58348-G
15CN120QBM3KG161	OSPP16C010000500000000000	ASL314/100X6SU	S26-58348-H
15CN120QBPKG121	OSPP16C010000650000000000	ASL316/110X6S	S26-58349-F
15CN120QBPKG161	OSPP16C010000650000000000	ASL316/110X6SM	S26-58349-G
15CN120QBT1KG121	OSPP16C010000700000000000	ASL316/110X6SS	S26-58349-H
15CN120QBT1KG161	OSPP16C010000700000000000	ASL316/110X6SU	S26-58350-F
15CN120QBT1KG162	OSPP16C012000260000000000	ASL32/16X2S	S26-58350-G
15CN120QEVM3KG164	OSPP16C012000260000000000	ASL32/16X2SM	S26-58350-H
15CN120QEVT1KG124	OSPP16C100000515000000000	ASL32/16X2SS	S26-58376-G
15CN120QEVT1KG164	OSPP16C100000515000000000	ASL32/16X2SU	S26-58376-H
15CN120QVM3KG121	OSPP16C100000575000000000	ASL320/133X6.5S	S26-58377-G
15CN202QBM3GG121	OSPP16C100000575000000000	ASL320/133X6.5SM	S26-58377-H
15CN202QBM3KG161	OSPP16C100000650000000000	ASL320/133X6.5SS	S26-58378-G
15CN205QBF1KG161	OSPP16C100000650000000000	ASL320/133X6.5SU	S26-58378-H
15CN205QBM3KG161	OSPP16C10000065000000F000	ASL33/25X3S	S26-58379-G
15CN205QBPKG161	OSPP16C10000065000000F000	ASL33/25X3SM	S26-58379-H
15CN205QBT1KG161	OSPP16C100000650010000000	ASL33/25X3SS	S26-58380-0
15CN205QEVM3KG124	OSPP16C100000650010000000	ASL33/25X3SU	S26-58391-0
15CN205QEVM3KS164	OSPP16C100000700000000000	ASL34/30X4S	S26-58398-G
15CN205QEVNKG164	OSPP16C100000700000000000	ASL34/30X4SM	S26-58398-H
15CN210QBF1KG121	OSPP16C10000070000000F000	ASL34/30X4SS	S26-58399-G
15CN210QBF1KG161	OSPP16C10000070000000F000	ASL34/30X4SU	S26-58399-H
15CN210QBM3GG161	OSPP16C100000700010000000	ASL35/38X5S	S26-58413-G
15CN210QBM3KG121	OSPP16C100000700010000000	ASL35/38X5SM	S26-58413-H
15CN210QBM3KG161	OSPP16C100000900010000000	ASL35/38X5SS	S26-58426-G
15CN210QBPKG161	OSPP16C100000900010000000	ASL35/38X5SU	S26-58431-G
15CN210QBT1KG121	OSPP250000000040000000000	ASL36/45X5S	S26-58431-H
15CN210QBT1KG161	OSPP250000000040000000000	ASL36/45X5SM	S26-58441-G
15CN210QEVM3KG124	OSPP25000000004000000F000	ASL36/45X5SS	S26-58441-H
15CN210QEVM3KG164	OSPP25000000004000000F000	ASL36/45X5SU	S26-58443-0
15CN210QEVPKG164	OSPP250000000040001000000	ASL38/60X7S	S26-58452-0
15CN210QEVT1GG124	OSPP250000000040001000000	ASL38/60X7SM	S26-58461-G
15CN210QEVT1GG164	OSPP250000000047000000000	ASL38/60X7SS	S26-58462-0
15CN210QEVT1KG124	OSPP250000000047000000000	ASL38/60X7SSM	S26-58466-0
15CN210QEVT1KG164	OSPP250000000050000000000	ASL38/60X7SU	S26-58467-0
15CN210QVT1KG164	OSPP250000000050000000000	ASL400-02SCP	S26-58467-5
15CN2-112072011	OSPP250000000050000200000	ASL60-01SNP	S26-58468-0
15CN2-113072021	OSPP250000000050000200000	ASL610/74X14.5S	S26-58468-5
15CN220QBM3GG121	OSPP250000000060000000000	ASL610/74X14.5SM	S26-58469-0
15CN220QBM3GG161	OSPP250000000060000000000	ASL610/74X14.5SS	S26-58473-0
15CN220QBM3KG121	OSPP250000000060000200000	ASL612/90X16S	S26-58473-5
15CN220QBM3KG161	OSPP250000000060000200000	ASL612/90X16SM	S26-58475-0
15CN220QBPKG121	OSPP250000000070000E00000	ASL612/90X16SS	S26-58475-5
15CN220QBT1KG161	OSPP250000000070000E00000	ASL62/16X2S	S26-58484-0
15CN220QEVM3KG164	OSPP250000000075000000000	ASL62/16X2SM	S26-58484-5

15CN220QEVPKG164	OSPP250000000075000000000	ASL62/16X2SS	S26-58485-0
15CN220QEVT1KG164	OSPP250000000080000000000	ASL62/16X2SU	S26-58486-0
15CN220QVT1KG121	OSPP250000000080000000000	ASL63/25X3.5S	S26-58486-5
15D46-6-4	OSPP250000000080000200000	ASL63/25X3.5SM	S26-58487-0
15D55-8-4	OSPP250000000080000200000	ASL63/25X3.5SS	S26-58488-0
15DEX-6-025SL50X	OSPP250000000080001000000	ASL63/25X3.5SU	S26-58489-0
15F12Q	OSPP250000000080001000000	ASL64/30X4S	S26-58493-0
15F21286	OSPP250000000080003000000	ASL64/30X4SM	S26-58494-0
15F2211	OSPP250000000080003000000	ASL64/30X4SS	S26-58495-0
15F2281	OSPP250000000085000000000	ASL64/30X4SU	S26-58496-0
15F2413	OSPP250000000085000000000	ASL65/38X5.5S	S26-58498-0
15F2416	OSPP250000000090000000000	ASL65/38X5.5SM	S26-58499-0
15F2482	OSPP250000000090000000000	ASL65/38X5.5SS	S26-58499-5
15F2483	OSPP250000000090000E00000	ASL65/38X5.5SU	S26-58500-0
15F2486	OSPP250000000090000E00000	ASL66/45X6.5S	S26-58501-0
15F2613	OSPP250000000100000000000	ASL66/45X6.5SM	S26-58501-5
15F2616	OSPP250000000100000000000	ASL66/45X6.5SS	S26-58502-5
15F2682	OSPP250000000010000000F000	ASL66/45X6.5SU	S26-58505-5
15F2686	OSPP250000000010000000F000	ASL68/60X7.5S	S26-58506-5
15F2916	OSPP250000000100000200000	ASL68/60X7.5SM	S26-58507-0
15F2986	OSPP250000000100000200000	ASL68/60X7.5SS	S26-58507-5
15F41286	OSPP250000000100000700000	ASL68/60X7.5SU	S26-58508-0
15F41686	OSPP250000000100000700000	ASLG310/70X7.5S	S26-58508-5
15F4281	OSPP250000000100000E00000	ASLG310/70X7.5SS	S26-58510-0
15F446Q	OSPP250000000100000E00000	ASLG312/80X6S	S26-58515-0
15F4482	OSPP250000000100000E06000	ASLG312/80X6SS	S26-58528-5
15F4483	OSPP250000000100000E06000	ASLG314/100X6S	S26-58531-0
15F4483-SOGWO	OSPP250000000100001000000	ASLG314/100X6SS	S26-58544-G
15F4486	OSPP250000000100001000000	ASLG316/110X6S	S26-58548-0
15F4488	OSPP250000000100060D00000	ASLG316/110X6SS	S26-58550-0
15F448Q	OSPP250000000100060D00000	ASLG32/16X2S	S26-58559-0
15F44QQ	OSPP250000000110000200000	ASLG32/16X2SS	S26-58591-G
15F4583	OSPP250000000110000200000	ASLG320/133X6.5S	S26-58591-H
15F4682	OSPP250000000110000E00000	ASLG320/133X6.5SS	S26-58600-0
15F4683	OSPP250000000110000E00000	ASLG33/25X3S	S26-58600-5
15F4686	OSPP250000000110000K00000	ASLG33/25X3SS	S26-58601-0
15F4688	OSPP250000000110000K00000	ASLG34/30X4S	S26-58602-0
15F4888	OSPP250000000111000000000	ASLG34/30X4SS	S26-58602-5
15F4983	OSPP250000000111000000000	ASLG35/38X5S	S26-58603-0
15F4986	OSPP250000000120000000000	ASLG35/38X5SS	S26-58617-0
15F61686	OSPP250000000120000000000	ASLG36/45X5S	S26-58619-0
15F6482	OSPP250000000120000200000	ASLG36/45X5SS	S26-58620-0
15F6483	OSPP250000000120000200000	ASLG38/60X7S	S26-58622-0
15F6486	OSPP250000000120001000000	ASLG38/60X7SS	S26-58625-G
15F6683	OSPP250000000120001000000	ASLG610/74X14.5S	S26-58625-H
15F6686	OSPP250000000125000000000	ASLG610/74X14.5SS	S26-58628-G
15F6688	OSPP250000000125000000000	ASLG612/90X16S	S26-58628-H
15F66QQ	OSPP250000000125001000000	ASLG612/90X16SS	S26-58635-G
15F6888	OSPP250000000125001000000	ASLG62/16X2S	S26-58635-H
15F6983	OSPP250000000130000000000	ASLG62/16X2SS	S26-58638-G
15F6986	OSPP250000000130000000000	ASLG63/25X3.5S	S26-58638-H
15F81286	OSPP250000000130000200000	ASLG63/25X3.5SS	S26-58643-0
15F81686	OSPP250000000130000200000	ASLG64/30X4S	S26-58646-H

15F8281	OSPP250000000130000300000	ASLG64/30X4SS	S26-58660-G
15F8482	OSPP250000000130000300000	ASLG65/38X5.5S	S26-58701-0
15F8483	OSPP250000000130000A00000	ASLG65/38X5.5SS	S26-58702-H
15F8486	OSPP250000000130000A00000	ASLG66/45X6.5S	S26-58756-G
15F8583	OSPP250000000135000200000	ASLG66/45X6.5SS	S26-58756-H
15F8682	OSPP250000000135000200000	ASLG68/60X7.5S	S26-58758-0
15F8683	OSPP250000000140000000000	ASLG68/60X7.5SS	S26-58825-0
15F8686	OSPP250000000140000000000	ASR310/62X7.5S	S26-58827-0
15F8888	OSPP250000000140000000M00	ASR310/62X7.5SM	S26-58828-0
15F8983	OSPP250000000140000000M00	ASR310/62X7.5SS	S26-58831-G
15F8983-SOGWO	OSPP250000000145000000000	ASR310/62X7.5SSM	S26-58835-0
15F8986	OSPP250000000145000000000	ASR310/62X7.5SU	S26-58877-H
15F898Q	OSPP250000000150000000000	ASR312/76X9S	S26-58890-0
15F99QQ	OSPP250000000150000000000	ASR312/76X9SM	S26-58891-0
15FX24	OSPP250000000015000000F000	ASR312/76X9SS	S26-58899-0
15H26-10-10	OSPP250000000015000000F000	ASR312/76X9SU	S26-58915-0
15H26-6-6	OSPP250000000150000200000	ASR314/90X10S	S26-58947-0
15H26-8-8	OSPP250000000150000200000	ASR314/90X10SM	S26-58972-H
15K0101-8-8C	OSPP250000000150000800000	ASR314/90X10SS	S26-58974-0
15K26-6-6	OSPP250000000150000800000	ASR314/90X10SU	S26-58976-0
15L26-10-12-PT	OSPP250000000150000E00000	ASR316/102X7S	S26-59014-0
15L26-8-8-PT	OSPP250000000150000E00000	ASR316/102X7SM	S26-59017-0
15M1212E6	OSPP250000000150001000000	ASR316/102X7SS	S26-59018-0
15M1212KQ	OSPP250000000150001000000	ASR316/102X7SU	S26-59041-G
15M1216E6	OSPP250000000150003000000	ASR32/18X4.5S	S26-59100-G
15M122E1	OSPP250000000150003000000	ASR32/18X4.5SM	S26-59103-G
15M124E3	OSPP250000000160000000000	ASR32/18X4.5SS	S26-59158-0
15M124E6	OSPP250000000160000000000	ASR32/18X4.5SU	S26-59162-G
15M126E3	OSPP250000000016000000F000	ASR33/22X4.5S	S26-59173-G
15M126E6	OSPP250000000016000000F000	ASR33/22X4.5SM	S26-59173-H
15M126KQ	OSPP250000000165000000000	ASR33/22X4.5SS	S26-59189-0
15M126QQ	OSPP250000000165000000000	ASR33/22X4.5SU	S26-59204-G
15M129E3	OSPP250000000165000E00000	ASR34/28X4.5S	S26-59205-G
15M129E6	OSPP250000000165000E00000	ASR34/28X4.5SM	S26-59207-G
15M129KQ	OSPP250000000170000000000	ASR34/28X4.5SS	S26-59214-0
15M22C8	OSPP250000000170000000000	ASR34/28X4.5SU	S26-59215-0
15M22C8-OP	OSPP250000000170000E00000	ASR35/35X5S	S26-59218-H
15M22N1	OSPP250000000170000E00000	ASR35/35X5SM	S26-59239-0
15M2416K6	OSPP250000000170000E0F000	ASR35/35X5SS	S26-59245-G
15M24C8	OSPP250000000170000E0F000	ASR35/35X5SU	S26-59246-0
15M24C8-OP	OSPP250000000170001000000	ASR36/43X6S	S26-59249-G
15M24N2	OSPP250000000170001000000	ASR36/43X6SM	S26-59258-G
15M24N3	OSPP250000000180000000000	ASR36/43X6SS	S26-59284-G
15M24N3-SOGWO	OSPP250000000180000000000	ASR36/43X6SU	S26-59284-H
15M24N6	OSPP250000000180000200000	ASR38/50X6S	S26-59308-0
15M24N8	OSPP250000000180000200000	ASR38/50X6SM	S26-59324-0
15M26C8	OSPP250000000180000700000	ASR38/50X6SS	S26-59333-0
15M26N2	OSPP250000000180000700000	ASR38/50X6SU	S26-59372-0
15M26N3	OSPP250000000180000E00000	ASR62/18X4S	S26-59373-0
15M26N6	OSPP250000000180000E00000	ASR62/18X4SM	S26-59380-0
15M28C8	OSPP250000000180000K00000	ASR62/18X4SS	S26-59389-0
15M29N3	OSPP250000000180000K00000	ASR62/18X4SU	S26-59404-0
15M29N6	OSPP250000000180001000000	ASR63/22X4.5S	S26-59427-0

15M412N6	OSPP250000000180001000000	ASR63/22X4.5SM	S26-59431-0
15M416N6	OSPP250000000180003003000	ASR63/22X4.5SS	S26-59437-0
15M42B1	OSPP250000000180003003000	ASR63/22X4.5SU	S26-59441-G
15M42B1-OP	OSPP250000000180200005000	ASR64/28X5S	S26-59447-G
15M42B8	OSPP250000000180200005000	ASR64/28X5SM	S26-59464-H
15M42B8-OP	OSPP250000000190000000000	ASR64/28X5SS	S26-59466-H
15M42D8	OSPP250000000190000000000	ASR64/28X5SU	S26-59476-H
15M42N1	OSPP250000000190100200000	ASR65/35X6.5S	S26-59482-0
15M44B8	OSPP250000000190100200000	ASR65/35X6.5SM	S26-59540-0
15M44B8-OP	OSPP250000000190100K00000	ASR65/35X6.5SS	S26-59547-0
15M44B8-SOG	OSPP250000000190100K00000	ASR65/35X6.5SU	S26-59548-0
15M44BQ	OSPP250000000197000200000	ASR66/44X7.5S	S26-59549-0
15M44D8	OSPP250000000197000200000	ASR66/44X7.5SM	S26-59551-0
15M44D8-OP	OSPP250000000200000000000	ASR66/44X7.5SS	S26-59555-0
15M44KQ	OSPP250000000200000000000	ASR66/44X7.5SU	S26-59555-5
15M44N2	OSPP250000000020000000F000	ASR68/51X8S	S26-59605-G
15M44N3	OSPP250000000020000000F000	ASR68/51X8SM	S26-59606-5
15M44N3-SOGWO	OSPP250000000200000200000	ASR68/51X8SS	S26-59630-0
15M44N6	OSPP250000000200000200000	ASR68/51X8SU	S26-59652-0
15M44N6-SOG	OSPP250000000200000300000	ASRG310/62X7.5S	S26-59666-0
15M44NQ	OSPP250000000200000300000	ASRG310/62X7.5SS	S26-59677-0
15M44Q8	OSPP250000000200000600000	ASRG312/76X9S	S26-59678-0
15M46B8	OSPP250000000200000600000	ASRG312/76X9SS	S26-59679-0
15M46B8-OP	OSPP250000000200000B00000	ASRG314/90X10S	S26-59680-F
15M46BQ	OSPP250000000200000B00000	ASRG314/90X10SS	S26-59682-0
15M46D8	OSPP250000000200000E00000	ASRG316/102X7S	S26-59683-0
15M46N2	OSPP250000000200000E00000	ASRG316/102X7SS	S26-59684-0
15M46N3	OSPP250000000200000K00000	ASRG32/18X4.5S	S26-59685-0
15M46N3-SOGWO	OSPP250000000200000K00000	ASRG32/18X4.5SS	S26-59709-0
15M46N6	OSPP250000000200000L00000	ASRG33/22X4.5S	S26-59710-0
15M46N8	OSPP250000000200000L00000	ASRG33/22X4.5SS	S26-59711-0
15M46NQ	OSPP250000000200001000000	ASRG34/28X4.5S	S26-59781-H
15M46QQ	OSPP250000000200001000000	ASRG34/28X4.5SS	S26-59784-0
15M48B8	OSPP250000000200003000000	ASRG35/35X5S	S26-59802-0
15M48B8-OP	OSPP250000000200003000000	ASRG35/35X5SS	S26-59809-0
15M48B8-SOG	OSPP250000000210000000000	ASRG36/43X6S	S26-59866-H
15M48D8	OSPP250000000210000000000	ASRG36/43X6SS	S26-59868-H
15M48D8-OP	OSPP250000000210001000000	ASRG38/50X6S	S26-59882-0
15M48N8	OSPP250000000210001000000	ASRG38/50X6SS	S26-59884-0
15M49N3	OSPP250000000220000000000	ASRG62/18X4S	S26-59885-H
15M49N3-SOG	OSPP250000000220000000000	ASRG62/18X4SS	S26-59906-0
15M49N6	OSPP250000000220000200000	ASRG63/22X4.5S	S26-59912-H
15M49QQ	OSPP250000000220000200000	ASRG63/22X4.5SS	S26-59948-0
15M58B8	OSPP250000000220000B00000	ASRG64/28X5S	S26-59950-H
15M612KQ	OSPP250000000220000B00000	ASRG64/28X5SS	S26-59962-0
15M612N6	OSPP250000000220000D00000	ASRG65/35X6.5S	S26-59970-0
15M612QQ	OSPP250000000220000D00000	ASRG65/35X6.5SS	S26-59970-5
15M616N6	OSPP250000000220000E00000	ASRG66/44X7.5S	S26-59975-0
15M62B1	OSPP250000000220000E00000	ASRG66/44X7.5SS	S26-75000-G
15M62B8	OSPP250000000220000E0F000	ASRG68/51X8S	S26-75001-0
15M62B8-OP	OSPP250000000220000E0F000	ASRG68/51X8SS	S26-75002-H
15M62D8	OSPP250000000220006000000	AS-Y-11	S26-75003-0
15M62N1	OSPP250000000220006000000	AS-Y-13	S26-75011-H

15M64B8	OSPP250000000220200200000	AS-Y-15	S26-75016-0
15M64B8-OP	OSPP250000000220200200000	AS-Y-17	S26-75021-G
15M64D8	OSPP250000000225000000000	AS-Y-19	S26-75053-0
15M64N2	OSPP250000000225000000000	AS-Y-22	S26-75058-H
15M64N3	OSPP250000000022500000F000	AS-Y-27	S26-75062-G
15M64N6	OSPP250000000022500000F000	AS-Y-33	S26-75074-G
15M64N8	OSPP250000000225006000000	AS-Y-35	S26-75093-0
15M64NQ	OSPP250000000225006000000	AS-Y-37	S26-75106-G
15M64Q8	OSPP250000000230000000000	AT12	S26-75117-0
15M64QQ	OSPP250000000230000000000	AT13	S26-75146-0
15M66B8	OSPP250000000230000600000	AT21SF	S26-75147-0
15M66B8-OP	OSPP250000000230000600000	AT26SF	S26-75148-0
15M66D8	OSPP250000000230000E00000	ATEX-ZERTIFIKAT	S26-75161-0
15M66KQ	OSPP250000000230000E00000	ATZ1040WBPXG24P	S26-75166-5
15M66N2	OSPP250000000235000000000	ATZ110CBPXG241	S26-75184-0
15M66N3	OSPP250000000235000000000	ATZ110CBPXG24QS02	S26-75197-0
15M66N3-SOGWO	OSPP250000000240000000000	ATZ110CBV1XG241	S26-75201-0
15M66N6	OSPP250000000240000000000	ATZ110QBPXG241	S26-75208-0
15M66NQ	OSPP250000000240000200000	ATZ1XXXBPXG241	S26-75320-0
15M66Q8	OSPP250000000240000200000	ATZ2040WBPXR481	S26-75340-G
15M68B8	OSPP250000000024000020F000	ATZ2040WBU2XR481	S26-75344-H
15M68B8-OP	OSPP250000000024000020F000	ATZ210CBPXR481	S26-75362-0
15M68C8	OSPP250000000240001000000	ATZ210CBV2XR481	S26-75402-G
15M68D8	OSPP250000000240001000000	ATZ210QBPXR481	S26-75410-0
15M68D8-OP	OSPP250000000250000000000	ATZ2120WBV1XL40Q	S26-75411-0
15M68N8	OSPP250000000250000000000	ATZ220QBU2XR481	S26-75412-0
15M68Q8	OSPP250000000025000000F000	AV06/4208X	S26-75413-0
15M69N3	OSPP250000000025000000F000	AV06/42KPLX	S26-75427-0
15M69N40	OSPP250000000250000200000	AV06TF	S26-75428-H
15M69N6	OSPP250000000250000200000	AV09TF	S26-75434-0
15M69Q6	OSPP250000000250000600000	AV13	S26-75439-0
15M72E1	OSPP250000000250000600000	AV26SF	S26-75446-0
15M74E3	OSPP250000000025000060F000	AVHC4-4F	S26-75447-0
15M74E6	OSPP250000000025000060F000	AVHC6-6F	S26-75459-0
15M76E3	OSPP250000000250000E00000	AVHC8-8F	S26-75463-0
15M76E6	OSPP250000000250000E00000	AVHC8-8FV	S26-75484-0
15M79E6	OSPP250000000250000E0F000	AVHN4-4F	S26-96396-0
15M812N6	OSPP250000000250000E0F000	AVHN4-4FV	S26-98502-G
15M816N6	OSPP250000000250000F00000	AVHN6-6F	S26-98514-G
15M82N1	OSPP250000000250000F00000	AVHN6-6FV	S26-98518-0
15M84N2	OSPP250000000250000K00000	AVHN8-8F	S26-98520-H
15M84N3	OSPP250000000250000K00000	AVHN8-8FV	S26-98522-G
15M84N3-SOGWO	OSPP250000000250001000000	AX13	S26-98526-H
15M84N6	OSPP250000000250001000000	AX26SF	S26-98538-0
15M84N8	OSPP250000000250003000000	AXC3F001007	S26-98547-H
15M84NQ	OSPP250000000250003000000	AXC3F006009	S26-98589-0
15M86N2	OSPP250000000250003003000	AXCSW0010060	S26-98614-G
15M86N3	OSPP250000000250003003000	AXCSW002001	S26-98616-0
15M86N3-SOGWO	OSPP250000000250006000000	AXCSW002002	S26-98617-0
15M86N6	OSPP250000000250006000000	AXCSW0040025	S26-98617-4
15M86N6-WO	OSPP250000000250070D00000	AXCSW0040045	S26-98617-5
15M86N8	OSPP250000000250070D00000	AXCSW0040074	S26-98622-G
15M86NQ	OSPP250000000260000000000	AXCSW0040075	S26-98626-0

15M89N3	OSPP250000000260000000000	AXCSW0040079	S26-98635-0
15M89N3-SOG	OSPP250000000260000200000	AXCSW0060016	S26-98642-0
15M89N3-SOGWO	OSPP250000000260000200000	AXCSW006005	S26-98648-0
15M89N3-WO	OSPP250000000260001000000	AXCSW0060058	S26-98663-0
15M89N40	OSPP250000000260001000000	AXCSW0060059	S26-98670-0
15M89N6	OSPP250000000260006000000	AXCSW0060061	S26-98685-0
15M89N6-K	OSPP250000000260006000000	AXCSW0060077	S26-98687-0
15M89N6-SOG	OSPP250000000264000000000	AXCSW0070017	S26-98688-0
15M89N6-WO	OSPP250000000264000000000	AXCSW0070024	S26-98699-0
15M89NQ	OSPP250000000265000000000	AXCSW008006	S26-98700-0
15M912BQ	OSPP250000000265000000000	AXCSW0080068	S26-98700-5
15M912KQ	OSPP250000000267000000000	AXCSW0090015	S26-98701-0
15M912QQ	OSPP250000000267000000000	AXCSW0090047	S26-98701-5
15M92B1	OSPP250000000270000000000	AXCSW0090065	S26-98702-0
15M92B8	OSPP250000000270000000000	AXEHK001001	S26-98703-0
15M92B8-OP	OSPP250000000270000200000	AXEHK0030010	S26-98707-0
15M92E1	OSPP250000000270000200000	AXEHK0030011	S26-98707-5
15M94B8	OSPP250000000270000600000	AXEHK003003	S26-98708-0
15M94B8-OP	OSPP250000000270000600000	AXEHS0010015	S26-98711-0
15M94B8-SOG	OSPP250000000270001000000	AXEHS0010016	S26-98711-5
15M94BQ	OSPP250000000270001000000	AXHSW002006	S26-98719-0
15M94E3	OSPP250000000275000000000	AXHSW004008	S26-98720-0
15M94E6	OSPP250000000275000000000	AXHSW0120011	S26-98721-0
15M94KQ	OSPP250000000276001000000	AXHSW012005	S26-98721-5
15M94Q8	OSPP250000000276001000000	AXR1/4-20	S26-98722-0
15M94QQ	OSPP250000000280000000000	AXR1/4-20	S26-98726-0
15M96B8	OSPP250000000280000000000	AXR3/8-20	S26-98728-0
15M96B8-OP	OSPP250000000280000200000	AXR3/8-20	S26-98736-0
15M96B8-SOG	OSPP250000000280000200000	AZ06TF	S26-98737-0
15M96BQ	OSPP250000000286003003000	AZ13	S26-98738-0
15M96E3	OSPP250000000286003003000	AZ26SF	S26-98739-0
15M96E6	OSPP250000000290000000000	AZAZ-16-16W	S26-98742-0
15M96KQ	OSPP250000000290000000000	AZAZ-6-6W	S26-98764-0
15M96QQ	OSPP250000000290000200000	AZSM12X1.5L2571X	S26-98766-0
15M98B8	OSPP250000000290000200000	AZSR1L2871X	S26-98767-0
15M98B8-OP	OSPP250000000290001000000	B 19-SP	S26-98768-0
15M98B8-OPSOG	OSPP250000000290001000000	B.01.103	S26-98774-0
15M98B8-SOG	OSPP250000000295000E00000	B.32.201	S26-98775-0
15M98G8	OSPP250000000295000E00000	B.34.214	S26-98777-0
15M98Q8	OSPP250000000295000E0F000	B.34.216	S26-98777-5
15M99BQ	OSPP250000000295000E0F000	B.34.253	S26-98779-0
15M99E6	OSPP250000000300000000000	B.34.301	S26-98780-0
15M99KQ	OSPP250000000300000000000	B.34.302	S26-98781-0
15M99Q3	OSPP250000000300000000000X	B.61.101	S26-98783-0
15MAFJ16M12	OSPP250000000300000000000X	B.61.106	S26-98783-5
15MAFJ16M16	OSPP250000000300000200000	B.61.201	S26-98793-0
15MAH4J12	OSPP250000000300000200000	B.61.206	S26-98796-0
15MAH4P4	OSPP250000000300000300000	B.61.301	S26-98797-0
15MAH4P6	OSPP250000000300000300000	B.61.305	S26-98806-5
15MAH4P8	OSPP250000000300000800000	B.61.306	S26-98828-5
15MAH6J12	OSPP250000000300000800000	B.62.203	S26-98847-0
15MAH6P4	OSPP250000000300000A0000X	B.62.204	S26-98848-0
15MAH6P6	OSPP250000000300000A0000X	B.62.205	S26-98871-0

15MAH6P8	OSPP250000000300000B00000	B.65.106	S26-98872-0
15MAH9J12	OSPP250000000300000B00000	B.68.226	S26-98876-0
15MAH9J16	OSPP250000000300000D00000	B.68.3102.UC	S26-98877-0
15MAH9P4	OSPP250000000300000D00000	B.81.314	S26-98878-0
15MAH9P6	OSPP250000000300000E00000	B.84.654	S26-98879-0
15MAH9P8	OSPP250000000300000E00000	B.84.746	S26-98880-0
15MAH9P8-SOG	OSPP250000000300000F00000	B.84.832	S26-98890-0
15MAL2H4	OSPP250000000300000F00000	B.85.615	S26-98891-0
15MAL2L2	OSPP250000000300000K00000	B.89.802	S26-98892-0
15MAL2L4	OSPP250000000300000K00000	B.89.901	S26-98892-5
15MAL2P2	OSPP250000000300000L00000	B.89.902	S26-98893-0
15MAL2P4	OSPP250000000300000L00000	B.89.970	S26-98894-0
15MAL4H4	OSPP250000000300001000000	B02E3FZN	S26-98895-0
15MAL4J4	OSPP250000000300001000000	B03-C1-M000	S26-98897-0
15MAL4L4	OSPP250000000300003000000	B03-C1-M000	S26-98898-0
15MAL4P4	OSPP250000000300003000000	B03-C2-0000	S26-98904-0
15MAL6J4	OSPP250000000300006000000	B03-C2-0000	S26-98906-0
15MAL6J6	OSPP250000000300006000000	B03-C2-D000	S26-98912-0
15MAL6L6	OSPP250000000300140B00000	B03-C2-D000	S26-98915-0
15MAM12J12	OSPP250000000300140B00000	B03-C2-DGP0	S26-98925-0
15MAM12J16	OSPP250000000305000000000	B03-C2-DGP0	S26-98926-0
15MAM12P4	OSPP250000000305000000000	B03-C2-G000	S26-98928-0
15MAM12P6	OSPP250000000305000200000	B03-C2-G000	S26-98933-0
15MAM12P8	OSPP250000000305000200000	B04BS3HZN	S26-98937-0
15MAM16J12	OSPP250000000309000000000	B04D3HZN	S26-98940-0
15MAM16J16	OSPP250000000309000000000	B04D3PZN	S26-98943-0
15MAM16P4	OSPP250000000310000000000	B04F3GZ19-110N586	S26-98953-0
15MAM16P6	OSPP250000000310000000000	B04F3GZN	S26-98957-G
15MAM16P8	OSPP250000000310000200000	B04G3GZN	S26-98958-0
15MAM4J12	OSPP250000000310000200000	B04H4GZN	S26-98965-0
15MAM4P4	OSPP250000000310006000000	B04J4EZN	S26-98967-0
15MAM4P6	OSPP250000000310006000000	B04J4GZN	S26-98968-0
15MAM4P8	OSPP250000000315000000000	B04J4GZNS	S26-98969-0
15MAM6J12	OSPP250000000315000000000	B04K4EZN	S26-98970-G
15MAM6P4	OSPP250000000315003003000	B04P3EZN	S26-98971-0
15MAM6P6	OSPP250000000315003003000	B06B3HZN	S26-98972-0
15MAM6P8	OSPP250000000320000000000	B08-01-FRG0	S26-98976-0
15MAM9J12	OSPP250000000320000000000	B08-01-FRG0	S26-99555-1
15MAM9J16	OSPP250000000320000000F000	B08-02-FK00	S26-99578-0
15MAM9P4	OSPP250000000320000000F000	B08-02-FK00	S26-99582-0
15MAM9P6	OSPP250000000320000200000	B08-02-FKG0	S26-99626-1
15MAM9P8	OSPP250000000320000200000	B08-02-FKG0	S26-99675-0
15MAP4J12	OSPP250000000320000600000	B08-02-FL00	S26-99689-0
15MAP4J4	OSPP250000000320000600000	B08-02-FL00	S26-99723-0
15MAP4J6	OSPP250000000320000B00000	B08-02-FR00	S26-99747-0
15MAP4J8	OSPP250000000320000B00000	B08-02-FR00	S26-99752-0
15MAP4P4	OSPP250000000320000E00000	B08-02-FRG0	S26-99781-0
15MAP4P6	OSPP250000000320000E00000	B08-02-FRG0	S26-99791-0
15MAP4P8	OSPP250000000320001000000	B08-02-PKG0	S26-99841-H
15MAP4RH12	OSPP250000000320001000000	B08-02-PKG0	S26-99847-0
15MAP4RH16	OSPP250000000325000000000	B08-02-RKG0	S26-99847-5
15MAP4RH9	OSPP250000000325000000000	B08-02-RKG0	S26-99941-0
15MAP4RH9-SOG	OSPP250000000325000200000	B08-2-4B	S26-99944-0

15MAP6J12	OSPP25000000325000200000	B08-2-4P	S2800
15MAP6J4	OSPP25000000330000000000	B08-2-6B	S28-C6-A000
15MAP6J6	OSPP25000000330000000000	B08-2-6P	S28-C6-A000
15MAP6P6	OSPP25000000330000200000	B08-2-A6B	S29-01169-0
15MAP6P8	OSPP25000000330000200000	B08-3-4B	S29-01170-0
15MAP6RH12	OSPP25000000330000600000	B08-3-4P	S2E-18004-5K
15MAP6RH16	OSPP25000000330000600000	B08-3-6B	S2E-18158-5K
15MAP6RH9	OSPP25000000330001000000	B08-3-6T	S2E-18697-5K
15MAP8J12	OSPP25000000330001000000	B08-3-A4B	S2E-18988-5K
15MAP8J4	OSPP25000000340000000000	B08-3-A6B	S2E-19190-0K
15MAP8J6	OSPP25000000340000000000	B08-4-4B	S2E-19196-0K
15MAP8J8	OSPP25000000034000000F000	B08-4-6B	S2E-19204-5
15MAP8P8	OSPP25000000034000000F000	B08-4-A6B	S3200
15MAP8P8-4	OSPP25000000340003000000	B08-C1-DKG0	S3201P
15MAP8RH12	OSPP25000000340003000000	B08-C1-DKG0	S3201PUL
15MAP8RH16	OSPP25000000340006000000	B08-C1-FK00	S3201T
15MAP8RH21	OSPP25000000340006000000	B08-C1-FK00	S3202
15MAP8RH9	OSPP25000000340101000000	B08-C1-FKG0	S3203
15MAP8RH9-SOG	OSPP25000000340101000000	B08-C1-FKG0	S3204TUL
15MAQ9H4	OSPP25000000340103000000	B08-C1-LSG0	S3206
15MFAJ16M9	OSPP25000000340103000000	B08-C1-LSG0	S3207P
15MX1212K8-OP	OSPP25000000345000000000	B08-C2-DKG0	S3207S
15MX124K8	OSPP25000000345000000000	B08-C2-DKG0	S3207T
15MX124K8-OP	OSPP25000000345001000000	B08-C2-DLG0	S3208P
15MX126K8	OSPP25000000345001000000	B08-C2-DLG0	S3208S
15MX126K8-OP	OSPP25000000345006000000	B08-C2-FK00	S3208T
15MX128K8	OSPP25000000345006000000	B08-C2-FK00	S3209P
15MX128K8-OP	OSPP25000000350000000000	B08-C2-FKAG	S3209S
15MX164K	OSPP25000000350000000000	B08-C2-FKAG	S3209T
15MX164K8	OSPP25000000035000000F000	B08-C2-FKG0	S320A060R000
15MX166K8	OSPP25000000035000000F000	B08-C2-FKG0	S320A060R000F
15MX168K8	OSPP25000000350000200000	B08-C2-FKG0-0	S320A060R001
15MX42K1	OSPP25000000350000200000	B08-C2-FKG0-0	S320A060RB00
15MX42K1-OP	OSPP25000000350000600000	B08-C2-FKGP	S320A060RB00F
15MX42K8	OSPP25000000350000600000	B08-C2-FKGP	S3211TUL
15MX44K8	OSPP250000000350000B00000	B08-C2-FL00	S3213
15MX44K8-OP	OSPP250000000350000B00000	B08-C2-FL00	S3216P
15MX46K8	OSPP250000000350000E00000	B08-C2-FLG0	S3216S
15MX48K8	OSPP250000000350000E00000	B08-C2-FLG0	S3216T
15MX48K8-OP	OSPP250000000350000K00000	B08-C2-FR00	S321D130RB00
15MX62K1	OSPP250000000350000K00000	B08-C2-FR00	S3222
15MX62K8	OSPP25000000350001000000	B08-C2-FRG0	S3225P
15MX64K8	OSPP25000000350001000000	B08-C2-FRG0	S3226P
15MX64K8-OP	OSPP25000000350006000000	B08-C2-FSG0	S3227
15MX66K8	OSPP25000000350006000000	B08-C2-FSG0	S3230P
15MX66K8-OP	OSPP25000000354000000000	B100/100.6	S3232
15MX68K8	OSPP25000000354000000000	B100/33.3	S3240
15MX68K8-OP	OSPP25000000355000000000	B10-2-4B	S3240TUL
15MX92K1	OSPP25000000355000000000	B10-2-6B	S340052
15MX92K8	OSPP25000000355000200000	B10-2-6P	S340054
15MX92K8-OP	OSPP25000000355000200000	B10-2-6T	S340055
15MX94K8	OSPP25000000356003003000	B10-2-8B	S340056
15MX94K8-OP	OSPP25000000356003003000	B10-2-8P	S340058

15MX96K8	OSPP250000000360000000000	B10-2-A8T	S340059
15MX96K8-OP	OSPP250000000360000000000	B102C	S3600
15MX98K8	OSPP25000000036000000F000	B102C	S3B3S15M4
15MX98K8-OP	OSPP25000000036000000F000	B10-2-C3C	S3B3S15M6
15MX98K8-SOG	OSPP25000000036000020F000	B10-2-C3D	S3BMB10-1/4
15P105QBT1KG121	OSPP25000000036000020F000	B10-2-C3E	S3BMB12-3/8
15P110QBM3KG121	OSPP250000000360000A00000	B102P	S3BMB14-1/2
15P110QBPKG121	OSPP250000000360000A00000	B102P	S3BMB6-1/4
15P110QBT1KG121	OSPP250000000360000E00000	B10-3-4B	S3BMB6-1/8
15P110QBT1KG124	OSPP250000000360000E00000	B10-3-6B	S3BMB8-1/4
15P120QBM3KG121	OSPP25000000036000100F000	B10-3-6T	S3BPL4/6-1/4
15P120QBT1KG121	OSPP25000000036000100F000	B10-3-8B	S3BPL4/6-1/8
15P202QBT1KG121	OSPP250000000370000000000	B10-3-A6B	S3BPL6/8-1/4
15P205QBT1KG121	OSPP250000000370000000000	B10-3-A8B	S3BPL6/8-1/8
15P210QBM3KG121	OSPP250000000370000700000	B103C	S4000
15P210QBT1KG121	OSPP250000000370000700000	B103C	S411C130R000
15P4071	OSPP250000000370001000000	B103L	S4400
15P4072	OSPP250000000370001000000	B103L	S451D130RB00
15P408	OSPP250000000370006000000	B103P	S4800
15P4081	OSPP250000000370006000000	B103P	S480A060R000
15P6071	OSPP250000000372000000000	B103R	S480A060R0G1
15P6081	OSPP250000000372000000000	B103R	S480A060RB00
15P8071	OSPP250000000375000000000	B10-3S-8B	S480A060RB00W2
15QS12071	OSPP250000000375000000000	B10-4-6B	S4UCOB10-1/4
15QS12072	OSPP250000000376000000000	B10-4-8B	S500B060R000
15QS4071	OSPP250000000376000000000	B105G04BJC	S500B060RB00
15QS4072	OSPP250000000376003003000	B105G04BJC	S500B160R000
15QS4081	OSPP250000000376003003000	B105G04WJC	S500B8IE1G1
15QS6071	OSPP250000000378000000000	B105G04WJC	S5200
15QS6072	OSPP250000000378000000000	B-1200	S54-36311-5
15QS9071	OSPP250000000380000000000	B-1200	S54-37709-0
15QS9072	OSPP250000000380000000000	B-1200A	S54-38219-5
15RVP9072	OSPP250000000380000E0F000	B-1200A	S54-38220-5
15RVP9072-CE	OSPP250000000380000E0F000	B-1200B	S54-39392-0
15RVP9072-SOG	OSPP250000000380006000000	B-1200C	S54-39395-0
15S26-10-10	OSPP250000000380006000000	B-1200D	S54-39395-5
15S26-6-6	OSPP250000000383000E0F000	B-1200E	S54-39601-0
15S26-8-8	OSPP250000000383000E0F000	B-1211	S55016-0508-46
15SM24071	OSPP250000000390000000000	B1218	S5600
15SM24071-HD2S	OSPP250000000390000000000	B1218	S56-40442-0
15SM24071-LT	OSPP250000000390001000000	B12-2-12B	S56-40609-0
15T26-10-10	OSPP250000000390001000000	B12-3-12B	S57-102-MO
15T26-10-12	OSPP250000000399000000000	B12-3-8B	S57-83-MO
15T26-12-12	OSPP250000000399000000000	B12-3-A12B	S600A060R000
15T26-6-6	OSPP250000000400000000000	B-1252	S600A060R000F
15T26-8-8	OSPP250000000400000000000	B133	S600A060RB00
15T3-16-16	OSPP25000000040000000F000	B133	S600A060RB00F
16 AOEG5-S	OSPP25000000040000000F000	B160T	S63PB10-1/4
16 AOEL6-S	OSPP250000000400000200000	B16-2-12B	S63PB10-3/8
16 BL-S	OSPP250000000400000200000	B16-2-16B	S63PB12-1/2
16 BL-SS	OSPP25000000040000020F000	B16-2-16T	S63PB12-1/4
16 BODY DIE	OSPP25000000040000020F000	B16-2-8B	S63PB12-3/8
16 BTX-B	OSPP250000000400000400000	B16-3-16B	S63PB14-1/2

16 BTX-S	OSPP250000000400000400000	B16-3-A16B	S63PB14-3/8
16 BTX-SS	OSPP250000000400000B00000	B1801-1486	S63PB4-1/8
16 BU-S	OSPP250000000400000B00000	B1801-1486	S63PB6-1/4
16 BZ-SS	OSPP250000000400000D00000	B1801-1498	S63PB6-1/8
16 C5BU-S	OSPP250000000400000D00000	B1801-1498	S63PB8-1/4
16 C5OLO-S	OSPP250000000400000E00000	B18-02-FG00	S63PB8-1/8
16 C5OX-S	OSPP250000000400000E00000	B18-02-FG00	S63PB8-3/8
16 C6BU-S	OSPP250000000400001000000	B18-02-FK00	S63PK10-1/4
16 C6LO-S	OSPP250000000400001000000	B18-02-FK00	S63PK10-3/8
16 C6LO-S V0894	OSPP250000000400003000000	B18-02-FKG0	S63PK12-1/2
16 C6X-S	OSPP250000000400003000000	B18-02-FKG0	S63PK12-1/4
16 CC5OLO-S	OSPP250000000410000000000	B18-02-GH00	S63PK12-3/8
16 CC5OX-S	OSPP250000000410000000000	B18-02-GH00	S63PK4-1/8
16 CCCTX-S	OSPP250000000410000600000	B18-02-GHG0	S63PK6-1/4
16 CCTX-S	OSPP250000000410000600000	B18-02-GHG0	S63PK6-1/8
16 CLO-S	OSPP250000000414000000000	B18-03-FG00	S63PK8-1/4
16 CLO-SS	OSPP250000000414000000000	B18-03-FG00	S63PK8-1/8
16 CP-SS	OSPP250000000420000000000	B18-03-FKG0	S63PK8-3/8
16 CTX-B	OSPP250000000420000000000	B18-03-FKG0	S6400
16 CTX-S	OSPP250000000420000200000	B18-04-CL00	S6464
16 DI FRIT-10MIC-SS	OSPP250000000420000200000	B18-04-CL00	S64PB10-1/4
16 DI FRIT-2MIC-SS	OSPP250000000420000E00000	B18-04-FH00	S64PB10-3/8
16 DI FRIT-5MIC-SS	OSPP250000000420000E00000	B18-04-FH00	S64PB12-1/4
16 DTX-S	OSPP250000000420001000000	B18-04-FK00	S64PB12-3/8
16 DTX-SS	OSPP250000000420001000000	B18-04-FK00	S64PB14-1/2
16 EBU-S	OSPP250000000420060B02000	B18-04-FKG0	S64PB4-1/8
16 ELO-S	OSPP250000000420060B02000	B18-04-FKG0	S64PB6-1/4
16 ETX-B	OSPP250000000420D00000000	B18-04-FL00	S64PB6-1/8
16 ETX-S	OSPP250000000420D00000000	B18-04-FL00	S64PB8-1/4
16 EW-SS	OSPP250000000425000000000	B18-04-GH00	S64PB8-1/8
16 F5BU-S	OSPP250000000425000000000	B18-04-GH00	S64PB8-3/8
16 F5OHAO-S	OSPP250000000425006000000	B18-04-GL00	S64PK10-1/4
16 F5OLO-S	OSPP250000000425006000000	B18-04-GL00	S64PK10-3/8
16 F65OL-S	OSPP250000000428000000000	B18-04-SG00	S64PK12-1/4
16 F65OX-S	OSPP250000000428000000000	B18-04-SG00	S64PK12-3/8
16 F6X-S	OSPP250000000430000000000	B181-1111-100	S64PK4-1/8
16 FF5OLO-S	OSPP250000000430000000000	B181-1111-100	S64PK6-1/4
16 FLO-S	OSPP250000000430001000000	B181-1111-150	S64PK6-1/8
16 FLO-SS	OSPP250000000430001000000	B181-1111-150	S64PK8-1/4
16 FNLBA-S	OSPP250000000440000000000	B181-1111-225	S64PK8-1/8
16 FNL-S	OSPP250000000440000000000	B181-1111-225	S64PK8-3/8
16 FNTX-B	OSPP250000000044000000X000	B181-1111-300	S64PMK6-1/4
16 FNTX-S	OSPP250000000044000000X000	B181-1111-300	S64PMK6-1/8
16 FNTX-SS	OSPP250000000440000200000	B181-1111-375	S68PB6M5
16 FNU-S	OSPP250000000440000200000	B181-1111-375	S68PK6M5
16 FNZ-SS	OSPP250000000444000000000	B181-1111-450	S68PK8M12
16 FW-SS	OSPP250000000444000000000	B181-1111-450	S68PMK4M5
16 FX-SS	OSPP250000000444000E00000	B181-1111-50	S6C4F-F25
16 G6X-S	OSPP250000000444000E00000	B181-1111-50	S6C4F-F5
16 G6X-SS	OSPP250000000445000000000	B181-1111-75	S6C4M-F5
16 GAP GAUGE	OSPP250000000445000000000	B181-1111-75	S6C6F-F5
16 GTX-S	OSPP250000000450000000000	B181-1111-750	S6C8F-F5
16 GW-SS	OSPP250000000450000000000	B181-1111-750	S71-3C12-12EF

16 HBU-S	OSPP25000000045000000F000	B181-1211-100	S71-3C12-12F
16 HBU-SS	OSPP25000000045000000F000	B181-1211-100	S71-3C12-12FSL
16 HL6-S	OSPP25000000045000020000	B181-1211-225	S71-3C12-12FV
16 HLO-S	OSPP25000000045000020000	B181-1211-225	S71-3C12-12FVSL
16 HP5ON-S	OSPP25000000045000020F000	B181-1311-150	S71-3C12-12RP
16 HP5ON-S V0894	OSPP25000000045000020F000	B181-1311-150	S71-3C16-16EF
16 HP5ON-SS	OSPP25000000045000060000	B181-2111-100	S71-3C16-16F
16 HW-SS	OSPP25000000045000060000	B181-2111-100	S71-3C16-16FE
16 HX6-S	OSPP250000000450000B00000	B181-2111-150	S71-3C16-16FSL
16 JBU-S	OSPP250000000450000B00000	B181-2111-150	S71-3C16-16FV
16 JLO-S	OSPP25000000045000100000	B181-2111-225	S71-3C16-16RPV
16 JTX-B	OSPP25000000045000100000	B181-2111-225	S71-3C16-20F
16 JTX-S	OSPP25000000045000600000	B181-2111-300	S71-3C4-4F
16 JW-SS	OSPP25000000045000600000	B181-2111-300	S71-3C4-4FE
16 JX6-S	OSPP25000000045021080000	B181-2111-50	S71-3C4-4FSL
16 KBZ-SS	OSPP25000000045021080000	B181-2111-50	S71-3C4-4FV
16 KLO-S	OSPP25000000045600000000	B18-C2-CG00	S71-3C4-4FVSL
16 KTX-S	OSPP25000000045600000000	B18-C2-CG00	S71-3C4-4RPV
16 LHQ1-S	OSPP25000000045600300 0	B18-C2-CL00	S71-3C6-6EF
16 LHQ2-S	OSPP25000000045600300 0	B18-C2-CL00	S71-3C6-6F
16 LOEQ2-S	OSPP25000000046000000000	B18-C2-DG00	S71-3C6-6FV
16 LOHB3-S	OSPP25000000046000000000	B18-C2-DG00	S71-3C6-6FVSL
16 LOHQ1-S	OSPP25000000046000060000	B18-C2-DK00	S71-3C6-8F
16 LOHQ2-S	OSPP25000000046000060000	B18-C2-DK00	S71-3C6-8FSL
16 LOHX6-S	OSPP250000000460000B00000	B18-C2-FG00	S71-3C8-8EF
16 LOVQ1-S	OSPP250000000460000B00000	B18-C2-FG00	S71-3C8-8F
16 LOVQ2-S	OSPP25000000046000100000	B18-C2-FGG0	S71-3C8-8FE
16 LVQ1-S	OSPP25000000046000100000	B18-C2-FGG0	S71-3C8-8FSL
16 LVQ2-S	OSPP25000000046500000000	B18-C2-FH00	S71-3C8-8FV
16 MTX-S	OSPP25000000046500000000	B18-C2-FH00	S71-3N12-12EF
16 MTX-SS	OSPP25000000046900000000	B18-C2-FK00	S71-3N12-12F
16 NUT DIE	OSPP25000000046900000000	B18-C2-FK00	S71-3N12-12FV
16 OTX-S	OSPP25000000047000000000	B18-C2-FKG0	S71-3N12-12RP
16 OTX-SS	OSPP25000000047000000000	B18-C2-FKG0	S71-3N12-12RPV
16 P5ON-S	OSPP25000000047000060000	B18-C2-FL00	S71-3N16-16EF
16 P5ON-S SOLID V0894	OSPP25000000047000060000	B18-C2-FL00	S71-3N16-16F
16 P5ON-S V0894	OSPP25000000047000600 0	B18-C3-DK00	S71-3N16-16FE
16 PH-6MO	OSPP25000000047000600 0	B18-C3-DK00	S71-3N16-16FV
16 PH-B	OSPP25000000047200000000	B18-C3-FG00	S71-3N16-16RP
16 PH-M	OSPP25000000047200000000	B18-C3-FG00	S71-3N16-16RPE
16 PH-SS	OSPP25000000047500000000	B18-C3-FGG0	S71-3N16-16RPV
16 PNBZ-SS	OSPP25000000047500000000	B18-C3-FGG0	S71-3N4-4F
16 PNLO-S	OSPP25000000047600000000	B18-C3-FH00	S71-3N4-4FE
16 PNTX-S	OSPP25000000047600000000	B18-C3-FH00	S71-3N4-4FV
16 PNTX-SS	OSPP25000000047600300 0	B18-C3-FHG0	S71-3N4-4RP
16 PNU-S	OSPP25000000047600300 0	B18-C3-FHG0	S71-3N4-4RPV
16 R5OLO-S	OSPP25000000047700000000	B18-C3-FK00	S71-3N6-6EF
16 R5OX-S	OSPP25000000047700000000	B18-C3-FK00	S71-3N6-6F
16 R6BU-S	OSPP25000000048000000000	B18-C3-FKG0	S71-3N6-6FV
16 R6LO-S	OSPP25000000048000000000	B18-C3-FKG0	S71-3N6-6RP
16 R6X-SS	OSPP25000000048000200000	B18-C3-FL00	S71-3N8-8EF
16 RTX-B	OSPP25000000048000200000	B18-C3-FL00	S71-3N8-8F
16 RTX-S	OSPP25000000048000100000	B18-C3-FLG0	S71-3N8-8FE

16 RTX-SS	OSPP250000000480001000000	B18-C3-FLG0	S71-3N8-8FV
16 S5OLO-S	OSPP250000000480101000000	B18-C3-GLG0-51	S7200
16 S5OX-S	OSPP250000000480101000000	B18-C3-GLG0-51	S75C12-12F
16 S6LO-S	OSPP250000000480900000000	B18-C4-CK00	S75C16-16F
16 S6X-SS	OSPP250000000480900000000	B18-C4-CK00	S75C20-20F
16 SBR	OSPP250000000485000000000	B18-C4-FG00	S75C24-24F
16 STX-S	OSPP250000000485000000000	B18-C4-FG00	S75C32-32F
16 TIZ .750-SS	OSPP250000000495003000000	B18-C4-FGG0	S75N12-12F
16 TL-S	OSPP250000000495003000000	B18-C4-FGG0	S75N16-16F
16 TL-SS	OSPP250000000500000000000	B18-C4-FH00	S75N20-20F
16 TPL-S	OSPP250000000500000000000	B18-C4-FH00	S75N24-24F
16 TPL-S BP	OSPP250000000500000006000	B18-C4-FK00	S75N32-32F
16 TPL-SS	OSPP250000000500000006000	B18-C4-FK00	S77C4-4FV
16 TU-S	OSPP250000000050000000F000	B18-C4-FKG0	S77C4-4M
16 TX-B	OSPP250000000050000000F000	B18-C4-FKG0	S77C4-6F
16 TX-S	OSPP250000000500000200000	B18-C4-FL00	S77C4-F250C
16 TX-S BP	OSPP250000000500000200000	B18-C4-FL00	S77C4-SF375CX
16 TX-SS	OSPP250000000500000400000	B18-C4-FLG0	S77C4-SF375CXV
16 TZ-SS	OSPP250000000500000400000	B18-C4-FLG0	S77C4-SF562CX
16 TZ-T	OSPP250000000500000600000	B18-C4-GH00	S77C4-SM375CX
16 TZ-ZY	OSPP250000000500000600000	B18-C4-GH00	S77N4-4F
16 V5OLO-S	OSPP250000000500000B00000	B18-C4-GHG0	S77N4-4FV
16 V5OX-S	OSPP250000000500000B00000	B18-C4-GHG0	S77N4-M250C
16 V6LO-S	OSPP250000000500000D00000	B18-C4-GL00	S77N4-SF375CX
16 V6X-B	OSPP250000000500000D00000	B18-C4-GL00	S77N4-SF375CXV
16 V6X-S	OSPP250000000500000E00000	B18-C4-LKG0	S77N4-SF562CX
16 V6X-S PLUG	OSPP250000000500000E00000	B18-C4-LKG0	S77N4-SM375CX
16 V6X-SS	OSPP250000000500000E0F000	B18-C4-MM00	S77N4-SM562CX
16 VTX-S	OSPP250000000500000E0F000	B18-C4-MM00	S8000
16 VTX-SS	OSPP250000000500000F00000	B18-C4-SG00	S800A060R000
16 WELO-S	OSPP250000000500000F00000	B18-C4-SG00	S800A060R000F
16 WELO-WLNL-S	OSPP250000000500000F0F000	B1A125ZN	S83-135-MO
16 WETX-WLN-S	OSPP250000000500000F0F000	B1B060Z50-120N345	S83-93-MO
16 WETX-WLN-SS	OSPP250000000500000G00000	B1B060ZN	S840074
16 WGTX-WLN-S	OSPP250000000500000G00000	B200/22.3	S8800
16 WJJLO-S V0894	OSPP250000000500000K00000	B20-2-20B	S8LCD024
16 WJJLO-WLNL-S	OSPP250000000500000K00000	B202P	S8LDA120
16 WLNL-S	OSPP250000000500000L00000	B202P	S8LDA240
16 WLO-S	OSPP250000000500000L00000	B202R	S8LDD012
16 WLO-WLNL-S	OSPP250000000500001000000	B202R	S8LDD024
16 WNLO-WLNL-S	OSPP250000000500001000000	B203L	S8LJD012
16 WNTX-WLN-S	OSPP250000000500003000000	B203L	S8LJD024
16 WTX-WLN-S	OSPP250000000500003000000	B203P	S8LWD012
16 XHBU-S	OSPP250000000500006000000	B203P	S8LWD024
16 XHL6-S	OSPP250000000500006000000	B203R	S8LWRD012
16 XHLO-S	OSPP250000000500100000000	B203R	S9600
16 XHQ1-S	OSPP250000000500100000000	B22CBB549F	S970400
16 XHQ2-S	OSPP250000000500101000000	B22CBB549F	SA0610HD1
16 XVQ1-S	OSPP250000000500101000000	B28-03-FKG0	SA0610HD1-MAB1/4
16 XVQ2-S	OSPP250000000505000000000	B28-03-FKG0	SA061HL1
1600 UL	OSPP250000000505000000000	B28-04-DGG0	SA061VHD1
1600KAAK13SPN	OSPP250000000510000000000	B28-04-DGG0	SA061VHD1-1/2-MAB1/8
1600KAAK17SPN	OSPP250000000510000000000	B28-04-FH00	SA061VHD1-MAB1/8

1600KAAK21SPN	OSPP250000000515000000000	B28-04-FH00	SA062HD1
1600KAIW13SPN	OSPP250000000515000000000	B28-04-FKG0	SA062HD1-1/2
1600KAIW13SVN	OSPP250000000516100E00000	B28-04-FKG0	SA062HD1-MAB1/4
1600KAIW17SPN	OSPP250000000516100E00000	B28-06-FKG0	SA062HL1
1600KAIW21SPN	OSPP250000000520000000000	B28-06-FKG0	SA062HM1
1600KAKU13SPN	OSPP250000000520000000000	B28-06-GHG0	SA062SD1
1600KATF06SPN	OSPP250000000520000009000	B28-06-GHG0	SA062VHD1
1600KATF08SPN	OSPP250000000520000009000	B28-C3-CG00	SA062VHD1-MAB1/8
1600KATF09SPN	OSPP250000000520001000000	B28-C3-CG00	SA063HD1
1600KATF10SPN	OSPP250000000520001000000	B28-C3-FK00	SA063HD1-MAB1/4
1600KATF13SPN	OSPP250000000520003003000	B28-C3-FK00	SA063HL1
1600KEAK13SPN	OSPP250000000520003003000	B28-C4-FG00	SA063HM1
1600KEAK17SPN	OSPP250000000520B00000000	B28-C4-FG00	SA063HS1
1600KEAK21SPN	OSPP250000000520B00000000	B28-C4-FGG0	SA063VHD1
1600KEIW13SPN	OSPP250000000525000000000	B28-C4-FGG0	SA063VHD1-MAB1/8
1600KEIW17SPN	OSPP250000000525000000000	B28-C4-FH00	SA064HD1
1600KEIW21SPN	OSPP250000000525001000000	B28-C4-FH00	SA064HD1-MAB1/4
1600KETF09SPN	OSPP250000000525001000000	B28-C4-FK00	SA064HL1
1600KETF10SPN	OSPP250000000530000000000	B28-C4-FK00	SA064HM1
1600KETF13SPN	OSPP250000000530000000000	B28-C4-FKG0	SA064HS1
160-1	OSPP250000000053000000F000	B28-C4-FKG0	SA065HD1
16021FIL	OSPP250000000053000000F000	B28-C4-FL00	SA065HD1-MAB1/4
16021FIL	OSPP250000000530000200000	B28-C4-FL00	SA065HM1
16047FIL	OSPP250000000530000200000	B28-C4-FL00-07	SA065HS1
16047FIL	OSPP250000000530000D00000	B28-C4-FL00-07	SA065HS1G1/2
16049FIL	OSPP250000000530000D00000	B28-C4-FLG0	SA066HD1
16049FIL	OSPP250000000530003000000	B28-C4-FLG0	SA066HD1.1-MAB1/4
16052FIL	OSPP250000000530003000000	B28-C4-GH00	SA066HD1-MAB1/4
16052FIL	OSPP250000000540000000000	B28-C4-GH00	SA066HL1
16057FIL	OSPP250000000540000000000	B28-C4-GLG0	SA066HM1
16057FIL	OSPP250000000540006000000	B28-C4-GLG0	SA066HS1G1/2
16058FIL	OSPP250000000540006000000	B28-C6-FG00	SA066SD1
16058FIL	OSPP250000000545000000000	B28-C6-FG00	SA067HD1
16060FIL	OSPP250000000545000000000	B28-C6-FGG0	SA067HD1-MAB1/4
16060FIL	OSPP250000000549000000000	B28-C6-FGG0	SA068HD1
16062FIL	OSPP250000000549000000000	B28-C6-FH00	SA068HD1-MAB1/4
16062FIL	OSPP250000000550000000000	B28-C6-FH00	SA068HL1
16064FIL	OSPP250000000550000000000	B28-C6-FK00	SA068HM1
16064FIL	OSPP250000000055000000F000	B28-C6-FK00	SA068SD1
16068FIL	OSPP250000000055000000F000	B28-C6-FKG0	SA069HD1
16068FIL	OSPP250000000550000200000	B28-C6-FKG0	SA069HD1-MAB1/4
1606B	OSPP250000000550000200000	B28-C6-FL00	SA07-1-R1/2-R3/4-RRR-M1/4
16070FIL	OSPP250000000550000600000	B28-C6-FL00	SA07-2-R1/2-R3/4-RRR-M1/4
16070FIL	OSPP250000000550000600000	B28-C6-GL00	SA07-3-R1/2-R3/4-RRR-M1/4
16076FIL	OSPP250000000550000E00000	B28-C6-GL00	SA10-1-G1/2-G1/2-S
16076FIL	OSPP250000000550000E00000	B28-C6-RAF0	SA101HD1
16078FIL	OSPP250000000550000G00000	B28-C6-RAF0	SA101HX1
16078FIL	OSPP250000000550000G00000	B2A125Z1-18NMK2	SA10-1-R3/4-R1-RR
16080FIL	OSPP250000000550001000000	B2A125Z1-26NMK2	SA10-1-R3/4-R1-RR/MAB-P
16080FIL	OSPP250000000550001000000	B2A125ZNMK2	SA102HD1
16083FIL	OSPP250000000550001A00000	B2B300T300-70NMK2	SA102HX1
16083FIL	OSPP250000000550001A00000	B2B300ZNMK2	SA10-2-R3/4-R1-RR
16090FIL	OSPP250000000550003000000	B2-HANDLE-BLACK	SA10-2-R3/4-R1-RR/MAB-P

16090FIL	OSPP250000000550003000000	B2-HANDLE-BLUE	SA103HD1
16-1 AOEG-S	OSPP250000000550010000000	B2-HANDLE-GREEN	SA103HD1-MAB1/4
16-1 F5OG-S	OSPP250000000550010000000	B2-HANDLE-RED	SA104HD1
16-1 Z3HLZ7-SS	OSPP250000000550010006000	B2-HANDLE-WHITE	SA104HD1-MAB1/4
16-1 ZHBW2-SS	OSPP250000000550010006000	B2-HANDLE-YELLOW	SA105HD1
16-1 ZHLW2-SS	OSPP250000000550010A00000	B300/33.6	SA105HD1-MAB1/4
16-1/2 AW2-SS	OSPP250000000550010A00000	B300/33.6	SA10-6-R3/4-R1-RR/MAB-P
16-1/2 F5OG-S	OSPP250000000550070D00000	B3004X035180	SA107HD1
16-10 F5OG5-S	OSPP250000000550070D00000	B3004X049074	SA107HD1-MAB1/4
16-10 F5OX-S	OSPP250000000550100G00000	B3004X049180	SA108HD1
16-10 TL-S	OSPP250000000550100G00000	B3006X035180	SA15Y57
16-10 TRBU-S	OSPP250000000556003003000	B3006X049074	SA15Y57
16-10 TRLO-S	OSPP250000000556003003000	B3006X049180	SA-1612BB1S
16-10 TRTX-S	OSPP250000000560000000000	B3006X065074	SA-1612BB1S
16-10HMK4S	OSPP250000000560000000000	B3006X065180	SA161X57
1610M5	OSPP250000000560001000000	B3007406X1.5M	SA161X57
16-10TRMTXSS	OSPP250000000560001000000	B3007406X1M	SA602MD
16-10TRTXS	OSPP250000000570000000000	B3007406X1MSS	SA602MD
161-1	OSPP250000000570000000000	B3007408X1.5M	SA602MDSS
16110-QC	OSPP250000000570000000F000	B3007408X1.5MSS	SA602MDSS
16111FIL	OSPP250000000570000000F000	B3007408X1M	SA605MD
16111FIL	OSPP250000000570000E00000	B3007408X1MSS	SA605MD
16-12 C5BU-S	OSPP250000000570000E00000	B3007410X1.5M	SAB.1562.10
16-12 C5OLO-S	OSPP250000000570001000000	B3007410X1.5MSS	SAB.1562.10.NPT
16-12 C5OX-S	OSPP250000000570001000000	B3007410X1M	SAB.1562.40
16-12 CBZ-SS	OSPP250000000570106000000	B3007410X1MSS	SAB.1562.40.NPT
16-12 CLO-S	OSPP250000000570106000000	B3007410X2M	SAB.1563.10
16-12 CTX-B	OSPP250000000575000000000	B3007412X1.5M	SAB.1563.10.NPT
16-12 CTX-S	OSPP250000000575000000000	B3007412X1.5MSS	SAB.1563.40
16-12 DBZ-SS	OSPP250000000575000000F000	B3007412X1M	SAE-CASE
16-12 ELZ-SS	OSPP250000000575000000F000	B3007412X1MSS	SAF105MD
16-12 F5BU-S	OSPP250000000575000200000	B3007412X2M	SAF105MD
16-12 F5OG5-S	OSPP250000000575000200000	B3007412X2MSS	SAP/SA-TEST
16-12 F5OLO-S	OSPP250000000575001000000	B3007414X1.5M	SAPKA24571X
16-12 F6X-S	OSPP250000000575001000000	B3007414X1M	SAPKA2VZX
16-12 FBU-S	OSPP250000000576000000000	B3007414X2M	SAPKA34571X
16-12 FBZ-SS	OSPP250000000576000000000	B3007415X1.5M	SAPKA3VZX
16-12 FHC-SS	OSPP250000000576003003000	B3007415X1.5MSS	SAPKA44571X
16-12 FLO-S	OSPP250000000576003003000	B3007415X1M	SAPKA4VZX
16-12 FTX-B	OSPP250000000578000K00000	B3007415X2M	SAPKA54571X
16-12 GBZ-SS	OSPP250000000578000K00000	B3007416X1.5M	SAPKA5VZX
16-12 HBZ-SS	OSPP250000000580000000000	B3007416X1.5MSS	SAPKA6VZX
16-12 HLO-S	OSPP250000000580000000000	B3007416X1M	SAPRWA14571X
16-12 HTX-S	OSPP250000000600000000000	B3007416X1MSS	SAPRWA24571X
16-12 LOHB3-S	OSPP250000000600000000000	B3007416X2.5M	SAPRWA34571X
16-12 LOHL6-S	OSPP250000000060000000F000	B3007416X2M	SAPRWA44571X
16-12 MHN-SS	OSPP250000000060000000F000	B3007416X2MSS	SAPRWA54571X
16-12 RA-SS	OSPP250000000600000200000	B3007418X1.5M	SAR35Y57G
16-12 RB-6MO	OSPP250000000600000200000	B3007418X1.5MSS	SAR35Y57G
16-12 RB-B	OSPP250000000600000600000	B3007418X1M	SAV282059R0001
16-12 RB-S	OSPP250000000600000600000	B3007418X2M	SAV282059R0002
16-12 RB-SS	OSPP250000000600000E00000	B3007418X2MSS	SAV282059R0003
16-12 SE-SS	OSPP250000000600000E00000	B3007420X1.5M	SAV282059R0007

16-12 T2HF-SS	OSPP250000000600000E0F000	B3007420X1.5MSS	SAV282059R0008
16-12 TL-S	OSPP250000000600000E0F000	B3007420X1M	SAV282059R0009
16-12 TRBU-S	OSPP250000000600000G00000	B3007420X2.5M	SAV282059R0011
16-12 TRBZ-SS	OSPP250000000600000G00000	B3007420X2.5MSS	SAV282309R0002
16-12 TRLON-S	OSPP250000000600000K00000	B3007420X2M	SAV282309R0003
16-12 TRLON-S PLUG	OSPP250000000600000K00000	B3007420X2MSS	SAV282309R0008
16-12 TRTXN-S	OSPP250000000600001000000	B3007420X3M	SAV282309R0009
16-12 TRTX-SS	OSPP250000000600001000000	B3007422X1.5M	SAV282310R0003
16-12 V5OLO-S	OSPP250000000600003000000	B3007422X1.5MSS	SAV300377R0006
16-12 V5OX-S	OSPP250000000600003000000	B3007422X2.5M	SAV300377R0007
16-12 VTX-S	OSPP250000000600006000000	B3007422X2M	SAV300748R0003
16-12 ZHBA-SS	OSPP250000000600006000000	B3007425X1.5M	SAV300808R0001
16-12C3MXS	OSPP250000000604000200000	B3007425X1.5MSS	SAV300846R0001
16-12C4OMLOS	OSPP250000000604000200000	B3007425X2.5M	SAV301037R0001
16-12C4OMLOSS	OSPP250000000606000000000	B3007425X2.5MSS	SAV301037R0002
16-12C4OMXS	OSPP250000000606000000000	B3007425X2M	SAV301037R0003
16-12C4OMXSS	OSPP250000000606003003000	B3007425X2MSS	SAV301037R0006
16-12C5OMLOS	OSPP250000000606003003000	B3007425X3M	SAV301037R0007
16-12C5OMXS	OSPP250000000610000000000	B3007425X3MSS	SAV301057P0002
16-12CMTXS	OSPP250000000610000000000	B3007428X2.5M	SAV301080R0001
16-12CMTXSS	OSPP250000000615000000000	B3007428X2M	SAV301199R0001
16-12F3MK4S	OSPP250000000615000000000	B3007428X2MSS	SAV301200R0001
16-12F3MXS	OSPP250000000616000F00000	B3007430X2.5M	SAV301326R0001
16-12F42EDMLOS	OSPP250000000616000F00000	B3007430X2.5MSS	SAV301350R0001
16-12F42EDMLOSS	OSPP250000000616000F0F000	B3007430X2M	SAV301604R0002
16-12F42EDMLOSV	OSPP250000000616000F0F000	B3007430X3M	SAV301906R0001
16-12F42EDMXS	OSPP250000000620000000000	B3007430X3MSS	SAV340571R0001
16-12F42EDMXSBP	OSPP250000000620000000000	B3007430X4M	SAV340571R0002
16-12F42EDMXSS	OSPP2500000062000000X000	B3007432X1.5M	SAV343354R0009
16-12F4OMXS	OSPP2500000062000000X000	B3007432X3M	SAV343383R0002
16-12F4OMXSS	OSPP250000000625000000000	B3007435X3M	SAV57270
16-12F4OMXSV	OSPP250000000625000000000	B3007435X3MSS	SAV57281
16-12F5OMLOS	OSPP250000000630000000000	B3007438X2.5M	SAVFC11TR0501
16-12F5OMXS	OSPP250000000630000000000	B3007438X2.5MSS	SAVFC11TR0502
16-12F5OMXSS	OSPP250000000630000200000	B3007438X2M	SAVFC12TR0001
16-12F5OMXSV	OSPP250000000630000200000	B3007438X3M	SAVFC12TR0004
16-12F63MXS	OSPP250000000630001000000	B3007438X3MSS	SAVFC12TR0021
16-12F642EDMXS	OSPP250000000630001000000	B3007438X4M	SAVFC12TR0024
16-12F642EDMXSS	OSPP250000000640000000000	B3007438X4MSS	SAVFC12TR0039
16-12F64OMXS	OSPP250000000640000000000	B3007438X5M	SAVFC12TR0527
16-12F6MK4S	OSPP250000000640001000000	B3007442X3M	SAVRZ6602
16-12F6MXS	OSPP250000000640001000000	B3007442X4M	SAVTBN103R0009
16-12F6MXSS	OSPP250000000642000000000	B3008X049074	SAVTBN203R1000
16-12FMK4S	OSPP250000000642000000000	B3008X049180	SAVTBN203R1100
16-12FMK4SS	OSPP250000000643000000000	B3008X065180	SAVTBN206R1000
16-12FMTXS	OSPP250000000643000000000	B3010X049180	SAVTBN206R1001
16-12FMTXSS	OSPP250000000650000000000	B3010X065074	SAVTBN206R1100
16-12G4MK4S	OSPP250000000650000000000	B3010X065180	SAVTBN306R0003
16-12G4MK4SS	OSPP2500000065000000F000	B3010X083180	SAVTBN306R0015
16-12G4MXS	OSPP2500000065000000F000	B3010X095074	SAVTBN406R0221
16-12HMK4S	OSPP250000000650000200000	B3012X049180	SAVTBN406R0423
16-12HMK4SS	OSPP250000000650000200000	B3012X065074	SAVTBN410R0111
16-12HMLOS	OSPP250000000650000B00000	B3012X065180	SAVTBN410R0117

16-12HMLOSS	OSPP250000000650000B00000	B3012X083180	SAVTBN420A6203
16-12HMTXS	OSPP250000000650000E00000	B3012X095074	SAVTBN420R0101
16-12HMTXSS	OSPP250000000650000E00000	B3012X095180	SAVTBN420R0102
16-12RB-825	OSPP250000000650000G00000	B3012X104180	SAVTBN420R0518
16-12RB-M	OSPP250000000650000G00000	B3012X120180	SAVTBN460A6204
16-12TRMLONSS	OSPP250000000650001000000	B3016X065180	SAVTBN460R0510
16-12TRMLOS	OSPP250000000650001000000	B3016X095180	SB07-2-671
16-12TRMTXSS	OSPP250000000065000100F000	B3016X109074	SB1.B1A2A
16-12TRTXS	OSPP250000000065000100F000	B3016X120180	SB1-02-LYS0
16-12TRTXSBP	OSPP250000000650003000000	B3018006X1.5M	SB1-02-LYS0
16-12XEMQ1SS	OSPP250000000650003000000	B3018006X1.5MSS	SB1-02-LYSS
16-12XEMQ2CF	OSPP250000000650100000000	B3018006X1M	SB1-02-LYSS
16-12XEMQ2SS	OSPP250000000650100000000	B3018006X1MSS	SB10513085242IAD641
16-14 F5OX-S	OSPP250000000650100G00000	B3018008X1.5M	SB1053002519S3644
16-14 TL-S	OSPP250000000650100G00000	B3018008X1.5MSS	SB10530045191644
16-14 TRTXN-S	OSPP250000000655001000000	B3018008X1M	SB1053004519S1W642-E
16144FIL	OSPP250000000655001000000	B3018008X1MSS	SB1053004519S1W644-E
16144FIL	OSPP250000000660000000000	B3018010.3X2.4MINCO	SB1053006519S1W644-E
16145FIL	OSPP250000000660000000000	B30180102X16MSS	SB1053006519S3644
16145FIL	OSPP250000000660000F00000	B30180102X20MSS	SB10540025191W644-E
16146FIL	OSPP250000000660000F00000	B3018010X1.2M	SB1054002519S1W644-E
16146FIL	OSPP250000000660001000000	B3018010X1.5M	SB1054004519S1W644-E
16148FIL	OSPP250000000660001000000	B3018010X1.5MSS	SB14520085241644
16148FIL	OSPP250000000670000E00000	B3018010X1M	SB1453008524S1644
16149FIL	OSPP250000000670000E00000	B3018010X1MSS	SB1454515524S3644
16149FIL	OSPP250000000675000000000	B3018010X2M	SB1-C2-JYS0
161598-01	OSPP250000000675000000000	B3018010X2MSS	SB1-C2-JYS0
161598-02	OSPP250000000676003003000	B3018012X1.5M	SB1-C2-KYS0
161598-04	OSPP250000000676003003000	B3018012X1.5MSS	SB1-C2-KYS0
161598-05	OSPP250000000680000000000	B3018012X1.6MSS	SB1-C2-LYS0
16-16 CBZ-SS	OSPP250000000680000000000	B3018012X1M	SB1-C2-LYS0
16-16 DBZ-SS	OSPP250000000680000200000	B3018012X1MSS	SB1-C2-LYSS
16-16 EBZ-SS	OSPP250000000680000200000	B3018012X2M	SB1-C2-LYSS
16-16 FBZ-SS	OSPP250000000680003000000	B3018012X2MSS	SB2-04-LXS0
16-16 FE-SS	OSPP250000000680003000000	B3018013.7X3MINCO	SB2-04-LXS0
16-16 FH4BZ-SS	OSPP250000000700000000000	B30180135X20MSS	SB2-04-LYS0
16-16 FHC-M	OSPP250000000700000000000	B30180135X29MSS	SB2-04-LYS0
16-16 FHC-SS	OSPP250000000070000000F000	B3018014X1.5M	SB20530505423A644
16-16 FHOA-SS	OSPP250000000070000000F000	B3018014X2M	SB20530705383A64E114
16-16 GBZ-SS	OSPP250000000700000200000	B3018015X1.5M	SB2-C4-LYS0
16-16 HBZ-SS	OSPP250000000700000200000	B3018015X1.5MSS	SB2-C4-LYS0
16-16 MCN-SS	OSPP250000000700000600000	B3018015X1M	SB56500,65111644
16-16 ME-SS	OSPP250000000700000600000	B3018015X1MSS	SB7040015111644
16-16 MHLN-SS 3.0	OSPP250000000700000700000	B3018015X2M	SB7040015111W644-E
16-16 MHN-625	OSPP250000000700000700000	B3018016X1.5M	SB704001511S1W644-E
16-16 MHN-B	OSPP250000000700000B00000	B3018016X1.5MSS	SB704002511S1644
16-16 MHN-M	OSPP250000000700000B00000	B3018016X1M	SB704002511S1W644-E
16-16 MHN-S	OSPP250000000700000D00000	B3018016X2.5M	SB70401,55142V654
16-16 MHN-SS	OSPP250000000700000D00000	B3018016X2.5MSS	SB70401,55142VX654
16-16 RA-SS	OSPP250000000700000E00000	B3018016X2M	SBA1051308524S2IAD641
16-16 SE-SS	OSPP250000000700000E00000	B3018016X2MSS	SBA10530025191W644-E
16-16 T2HF-SS	OSPP250000000700000G00000	B3018016X3M	SBA1053004519S1W644-E
16-16 T2HG-SS	OSPP250000000700000G00000	B3018017.1X3.2MINCO	SBA10530065241642

16-16 WBZ-SS	OSPP250000000700000K00000	B30180172X23MSS	SBA10540045191W644-E
16-16 XH2BZ-SS	OSPP250000000700000K00000	B30180172X29MSS	SBA10ET1-100
16-16 XHBZ-SS	OSPP250000000700001000000	B3018018X1.5M	SBA10ET1-140
16-16 ZHBA5-SS	OSPP250000000700001000000	B3018018X1.5MSS	SBA10ET1-160
16-16 ZHBA-SS	OSPP250000000070000100F000	B3018018X1M	SBA10ET1-210
16-16 ZHLW-SS	OSPP250000000070000100F000	B3018018X2M	SBA10ET1-300
161602-01	OSPP250000000700003000000	B3018020X1.5M	SBA10ET1-330
161603-01	OSPP250000000700003000000	B3018020X1.5MSS	SBA10MT1-050
161605-01	OSPP250000000700100G00000	B3018020X2.5M	SBA10MT1-100
16-16-12 JBZ-SS	OSPP250000000700100G00000	B3018020X2.5MSS	SBA10MT1-140
16-16-12 JLZ-SS	OSPP250000000706000000000	B3018020X2M	SBA10MT1-210
16-16-12 OBZ-SS	OSPP250000000706000000000	B3018020X2MSS	SBA10MT1-250
16-16-12JMTXS	OSPP250000000706003003000	B3018020X3M	SBA10MT1-280
16-16-12JMTXSS	OSPP250000000706003003000	B3018020X4M	SBA10MT1-330
16-16-16 FT-B	OSPP250000000710000000000	B3018021.3X3.7MINCO	SBA1453008524S1W644-E
16-16-16 FT-M	OSPP250000000710000000000	B30180213X36MSS	SBA14530155241642
16-16-16 FT-SS	OSPP250000000716003003000	B3018022X1.5M	SBA1453028524S13644
16-16-16 JBZ-SS	OSPP250000000716003003000	B3018022X1M	SBA20ET1-050
16-16-16 MBT-SS	OSPP250000000720000000000	B3018022X2.5M	SBA20ET1-100
16-16-16 MT-SS	OSPP250000000720000000000	B3018022X2M	SBA20ET1-120
16-16-16 OBZ-SS	OSPP250000000720000009000	B3018025X1.5M	SBA20ET1-140
16-16-16 ST-SS	OSPP250000000720000009000	B3018025X2.5M	SBA20ET1-160
16-16-20S4OMXS	OSPP250000000720000000X000	B3018025X2.5MSS	SBA20ET1-200
16-16-20S4OMXSV	OSPP250000000720000000X000	B3018025X2M	SBA20ET1-210
16-16-4 JLZ-SS	OSPP250000000720000200000	B3018025X2MSS	SBA20ET1-250
16-16-6 JLZ-SS	OSPP250000000720000200000	B3018025X3M	SBA20ET1-280
16-16-8 JBZ-SS	OSPP250000000720000C00000	B3018025X3MSS	SBA20ET1-300
16-16-8 JLZ-MMX	OSPP250000000720000C00000	B3018025X4M	SBA20ET1-330
16-16-8 JLZ-SS	OSPP250000000725000000000	B3018026.7X3.9MINCO	SBA20ET5-210
16168FIL	OSPP250000000725000000000	B30180269X36MSS	SBA20MT1-050
16168FIL	OSPP250000000726003003000	B3018028X2.5M	SBA20MT1-100
16-16-8JMTXS	OSPP250000000726003003000	B3018028X2M	SBA20MT1-120
16169FIL	OSPP250000000730000000000	B3018028X2MSS	SBA20MT1-140
16169FIL	OSPP250000000730000000000	B3018028X3M	SBA20MT1-160
16-16F6MK4S	OSPP250000000730000200000	B3018030X2.5M	SBA20MT1-200
16-16F6MK4SS	OSPP250000000730000200000	B3018030X2M	SBA20MT1-210
16-16K MHN-SS	OSPP250000000730000400000	B3018030X3M	SBA20MT1-250
16-16K RA-SS	OSPP250000000730000400000	B3018030X3MSS	SBA20MT1-280
16-16R CBZ-SS	OSPP250000000731000700000	B3018030X4M	SBA20MT1-300
16-16R FBZ-SS	OSPP250000000731000700000	B3018032X1.5M	SBA20MT1-330
16-16R MHN-SS	OSPP250000000735003000000	B3018032X3M	SBA20MT5-210
16-16R RA-6MO	OSPP250000000735003000000	B3018032X4M	SBA20MT5-250
16-16R RA-SS	OSPP250000000740000000000	B3018033.4X4.5MINCO	SBA32ET1-100
16170FIL	OSPP250000000740000000000	B30180337X45MSS	SBA32ET1-200
16170FIL	OSPP250000000074000000F000	B3018035X2.5M	SBA32ET1-210
16175FIL	OSPP250000000074000000F000	B3018035X2M	SBA32ET1-250
16175FIL	OSPP250000000750000000000	B3018035X3M	SBA32ET1-280
16176FIL	OSPP250000000750000000000	B3018038X2M	SBA32ET1-300
16176FIL	OSPP250000000075000000F000	B3018038X3M	SBA32ET1-330
16179FIL	OSPP250000000075000000F000	B3018038X3MSS	SBA32MT1-100
16179FIL	OSPP250000000750000E0F000	B3018038X4M	SBA32MT1-140
16185FIL	OSPP250000000750000E0F000	B3018038X4MSS	SBA32MT1-210
16185FIL	OSPP250000000750000G00000	B3018038X5M	SBA32MT1-250

16187FIL	OSPP250000000750000G00000	B3020X120074	SBA32MT1-300
16187FIL	OSPP250000000750001000000	B3020X120180	SBA32MT1-330
1619FIL	OSPP250000000750001000000	B3024X120180	SBA4571X
1619FIL	OSPP250000000750006000000	B310BB549C	SBA704001511S1W644-E
161X57-SS	OSPP250000000750006000000	B310BB549C	SBA704002511S1W644-E
161X57-SS	OSPP250000000750100E00000	B310BB553C	SBAX
16-2 RB-SS	OSPP250000000750100E00000	B310BB553C	SBB14571X
16-20 C5OLO-S	OSPP250000000750100G00000	B310BC553C	SBB1X
16-20 C5OX-S	OSPP250000000750100G00000	B310BC553C	SBB24571X
16-20 CTX-S	OSPP250000000755001000000	B315BB549H	SBB2X
16-20 F5BU-S	OSPP250000000755001000000	B315BB549H	SBC1R6
16-20 F5OG5-S	OSPP250000000760000000000	B315BB553H	SBC3M10M
16-20 F5OLO-S	OSPP250000000760000000000	B315BB553H	SBC3M20M
16-20 F5OX-S	OSPP250000000762000000000	B315BXXXXH	SBC3RD16M
16-20 FTX-S	OSPP250000000762000000000	B315BXXXXH	SBC3RD7M
16-20 LOHB3-S	OSPP250000000762001000000	B315KB549C	SBPL4/6-1/4
16-20 V5OLO-S	OSPP250000000762001000000	B315KB549C	SBPL4/6-1/8
16-20C4OMLOS	OSPP250000000765000000000	B31820-067	SBPL6/8-1/4
16-20C4OMXS	OSPP250000000765000000000	B32002	SBR 22MM
16-20F42EDMLOS	OSPP250000000776003003000	B32008P	SBR 25MM
16-20F42EDMLOSV	OSPP250000000776003003000	B32013	SBR 30MM
16-20F42EDMXS	OSPP250000000790000000000	B32016P	SBR03
16-20F42EDMXSS	OSPP250000000790000000000	B32016T	SBSV1453015524S3644
16-20F4OMXS	OSPP250000000790000F00000	B320BC553C	SBSV1454522524S3644
16-20F5OMLOS	OSPP250000000790000F00000	B320BC553C	SBZ 10-10-1/4-SS
16-20F5OMXS	OSPP250000000795000E00000	B3250AB	SBZ 10-10-3/8-SS
16-20LEMQ1SS	OSPP250000000795000E00000	B3250AB	SBZ 12-12-1/2-SS
16-20LEMQ2SS	OSPP250000000800000000000	B3250BB	SBZ 12-12-1/4-SS
16-20XEMQ1SS	OSPP250000000800000000000	B3250BB	SBZ 12-12-3/8-SS
16-20XEMQ2CF	OSPP250000000800000200000	B3250CB	SBZ 6-6-1/4-SS
16-20XEMQ2SS	OSPP250000000800000200000	B3250CB	SBZ 6-6-1/8-SS
16213FIL	OSPP250000000800000300000	B3250DB	SBZ 8-8-1/4-SS
16213FIL	OSPP250000000800000300000	B3250DB	SC05/04
16213FIL	OSPP250000000800000400000	B3250X	SC05/05
16213FIL	OSPP250000000800000400000	B3250X	SC10/06
16215FIL	OSPP250000000800000600000	B325BB549H	SC10/06N
16215FIL	OSPP250000000800000600000	B325BB549H	SC10/08
16216FIL	OSPP250000000800000E00000	B325BXXXXH	SC10/08N
16216FIL	OSPP250000000800000E00000	B325BXXXXH	SC3/8
1621FIL	OSPP250000000800000K00000	B32-7112B-100	SC3/8
1621FIL	OSPP250000000800000K00000	B32-7112B-100	SC32
16223FIL	OSPP250000000800001000000	B32-7112B-160	SC4U1/4-6
16223FIL	OSPP250000000800001000000	B32-7112B-160	SC4U1/8-4
16224FIL	OSPP250000000800006000000	B32-7112B-200	SC4UD1/4-6
16224FIL	OSPP250000000800006000000	B32-7112B-200	SC50
16-22L LOHU86-S	OSPP250000000800100400000	B32-7112B-25	SC-510-03-JD
16239FIL	OSPP250000000800100400000	B32-7112B-25	SC-600
16239FIL	OSPP250000000810000000000	B32-7112B-50	SC-811
16-24 F5OX-S	OSPP250000000810000000000	B32-7112B-50	SC8UM5-4
16241FIL	OSPP250000000815001000000	B32-7112B-80	SC-901
16241FIL	OSPP250000000815001000000	B32-7112B-80	SC-910
16245FIL	OSPP250000000820001000000	B33413MTF	SC-911
16245FIL	OSPP250000000820001000000	B33413MTF	SC-912

16246FIL	OSPP250000000820003000000	B33413MTL	SC-921
16246FIL	OSPP250000000820003000000	B33413MTL	SCA-1/2EDX1/2-D
16247FIL	OSPP250000000825000000000	B33413TF	SCA-1/2-EMA-3
16247FIL	OSPP250000000825000000000	B33413TF	SCA-1/2-EMA-3-ELCF
16-24F42EDMLOS	OSPP250000000826000000000	B33414MTA	SCA-1/2-EMA-3-HP
1625KAAK13SPN	OSPP250000000826000000000	B33414MTA	SCA-1/2-EMA-3-S
1625KAAK17SPN	OSPP250000000826003003000	B33414MTF	SCA-1/2-EMA-4
1625KAAK17SPN_99	OSPP250000000826003003000	B33414MTF	SCA-1/2-PQC
1625KAAK21SPN	OSPP250000000830000000000	B33414TF	SCA-1/4-ED-1/2-ED
1625KAAK21SPN_99	OSPP250000000830000000000	B33414TF	SCA-1/4EDX1/4-D
1625KAIW13SPN	OSPP250000000830000200000	B33424MTF	SCA-1/4-EMA-3CF
1625KAIW17SPN	OSPP250000000830000200000	B33424MTF	SCA-1/4-EMA-3-ELCF
1625KAIW21SPN	OSPP250000000848000000000	B33443TF	SCA-1/4-EMA-3-S
1625KAIW21SPN_99	OSPP250000000848000000000	B33443TF	SCA-1/4-M22X1.5-ED
1625KAKU10SPN	OSPP250000000850000000000	B335000XXH	SCA-1/4-MAVMD-EMA-3CF
1625KAKU12SPN	OSPP250000000850000000000	B335000XXH	SCA-1/4-PQC
1625KAKU13SPN	OSPP250000000850000000F000	B345000XXH	SCA-7/16-EMA-3
1625KATF06SPN	OSPP250000000850000000F000	B345000XXH	SCA-90-EMA-3
1625KATF08SPN	OSPP250000000850000800000	B355BB549H	SCA-90-EMA-4
1625KATF09SPN	OSPP250000000850000800000	B355BB549H	SC-ACC-01
1625KATF09SPN_99	OSPP250000000850001000000	B355BXXXXH	SC-ACC-01-ST
1625KATF10SPN	OSPP250000000850001000000	B355BXXXXH	SCA-EMA-3/1
1625KATF13SPN	OSPP250000000850003000000	B35G01AGC	SCA-EMA-3/2
1625KATF13SPN_99	OSPP250000000850003000000	B35G01AGC	SCA-EMA-3/3
1625KATP10SPN	OSPP250000000860000000000	B35G02AHC	SCA-EMA-3/4
1625KATP13SPN	OSPP250000000860000000000	B35G02AHC	SCA-EMA-3/PD
16-25MMLOHB3S	OSPP250000000870000000000	B35G02DHC	SCA-EMA-3/PQC
16-25S LOHU86-S	OSPP250000000870000000000	B35G02DHC	SCA-EMA-4/4-KM
16269FIL	OSPP250000000870000009000	B365BB549H	SCAF-3/4-90
16269FIL	OSPP250000000870000009000	B365BB549H	SCA-GMA3/20S/T
16272FIL	OSPP250000000882000000000	B365BXXXXH	SCA-MS-VAS
16272FIL	OSPP250000000882000000000	B365BXXXXH	SCAN-631-AS
16273FIL	OSPP250000000885000000000	B375BB549H	SCAQ-060
16273FIL	OSPP250000000885000000000	B375BB549H	SCAQ-150
16-2829	OSPP250000000900000000000	B375BXXXXH	SCAQ-GIR1/2CFX
16-3/4 F5OG-S	OSPP250000000900000000000	B375BXXXXH	SCA-TT-10-1/2
16316-01000	OSPP250000000900000200000	B385000XXH	SCA-TT-10-100
16316-01000	OSPP250000000900000200000	B385000XXH	SCA-TT-10-150
16316-02000	OSPP250000000900000600000	B39-08-FH00	SCA-TT-10-250
16316-02000	OSPP250000000900000600000	B39-08-FH00	SCA-TT-10-SD
16316-02170	OSPP250000000900001000000	B39-08-FL00	SC-BAT-340
16316-02170	OSPP250000000900001000000	B39-08-FL00	SC-BAT-400
16316-02250	OSPP250000000900006000000	B39-C6-FL00	SCC-120
16316-02250	OSPP250000000900006000000	B39-C6-FL00	SCC-200
16316-06000	OSPP250000000910000000000	B39-C8-FH00	SCC-500
16316-06000	OSPP250000000910000000000	B39-C8-FH00	SC-CD 4082
16317-01080	OSPP250000000910000E0F000	B39-C8-FL00	SCC-DRV-300
16317-01080	OSPP250000000910000E0F000	B39-C8-FL00	SCC-FLOW
16317-01880	OSPP250000000920000000000	B39-C8-GH00	SCC-PTQ-600
16317-01880	OSPP250000000920000000000	B39-C8-GH00	SC-DVD 4082
16317-02250	OSPP250000000920000E0F000	B3E5BXXXXH	SCE-020-02
16317-02250	OSPP250000000920000E0F000	B3E5BXXXXH	SCE-025-01
16376FIL	OSPP250000000930000200000	B3G5BB543H	SCEA-LAN

16376FIL	OSPP250000000930000200000	B3G5BB543H	SCFT-004-02-02-UNF
16378FIL	OSPP25000000093000020F000	B3G5BB549H	SCFT-015-02-02
16378FIL	OSPP25000000093000020F000	B3G5BB549H	SCFT-015-02-02-ST
16379FIL	OSPP250000000950000000000	B3J5BB549H	SCFT-015-22-07
16379FIL	OSPP250000000950000000000	B3J5BB549H	SCFT-015-C2-05
16380FIL	OSPP250000000950000200000	B3M5000XXH	SCFT-015-C2-05-ST
16380FIL	OSPP250000000950000200000	B3M5000XXH	SCFT-016-02-02-UNF
16382FIL	OSPP250000000960000000000	B3P5000XXH	SCFT-060-02-02
16382FIL	OSPP250000000960000000000	B3P5000XXH	SCFT-060-02-02-ST
16383FIL	OSPP250000000960001000000	B3R5BB549H	SCFT-060-02-02-US-ST
16383FIL	OSPP250000000960001000000	B3R5BB549H	SCFT-060-22-07
16396FIL	OSPP250000000965000000000	B3R5BXXXXH	SCFT-060-C2-05
16396FIL	OSPP250000000965000000000	B3R5BXXXXH	SCFT-060-C2-05-ST
16397FIL	OSPP250000000975000000000	B3T5BB549H	SCFT-080-02-02-UNF
16397FIL	OSPP250000000975000000000	B3T5BB549H	SCFT-150-02-02
163FIL	OSPP250000000990000000000	B3T5BXXXXH	SCFT-150-02-02-ST
163FIL	OSPP250000000990000000000	B3T5BXXXXH	SCFT-150-22-07
16-4 FHC-SS	OSPP250000001000000000000	B3U5000XXH	SCFT-150-C2-05
16-4 MHN-SS	OSPP250000001000000000000	B3U5000XXH	SCFT-150-DRV
16-4 RA-SS	OSPP250000001000000200000	B4004X035180	SCFT-150-DRV-C2-05
16-4 RB-S	OSPP250000001000000200000	B4004X049180	SCFT-160-02-02-UNF
16-4 RB-SS	OSPP250000001000000706000	B4006X065180	SCFT-300-02-02
16-4 RB-SSHP	OSPP250000001000000706000	B4008X065180	SCFT-300-02-02-EPDM
16406FIL	OSPP250000001000000D00000	B4008X083180	SCFT-300-02-02-ST
16406FIL	OSPP250000001000000D00000	B4010X065180	SCFT-300-02-02-US-ST
16410 S	OSPP250000001000000E00000	B4010X083180	SCFT-300-02-02-WG
16423FIL	OSPP250000001000000E00000	B4012X065180	SCFT-300-22-07
16423FIL	OSPP250000001000000K00000	B4012X083180	SCFT-300-C2-05
16424FIL	OSPP250000001000000K00000	B4016X095180	SCFT-600-02-02
16424FIL	OSPP250000001000001000000	B40-7112B-125	SCFT-600-02-02-ST
1642FIL	OSPP250000001000001000000	B40-7112B-125	SCFT-600-02-02-US-ST
1642FIL	OSPP250000001000001A00000	B40-7112B-225	SCFT-600-22-07
16432FIL	OSPP250000001000001A00000	B40-7112B-225	SCFT-600-C2-05
16432FIL	OSPP250000001000003000000	B40-7112B-25	SCFT-750-02-02
16436-01300	OSPP250000001000003000000	B40-7112B-25	SCFT-750-C2-05
16436-01300	OSPP250000001000010000000	B40-7112B-250	SCFTA-02
16437-00800	OSPP250000001000010000000	B40-7112B-250	SCHS-500
16437-00800	OSPP250000001000010300000	B40-7112B-40	SCHS-500-KIT
16437-01000	OSPP250000001000010300000	B40-7112B-40	SCJN-016-01
16437-01000	OSPP250000001000101000000	B40-7112B-50	SCJN-016-01-ST
164373-01	OSPP250000001000101000000	B40-7112B-50	SCJN-060-01-VAS-6330
16438FIL	OSPP25000000101500 0E0F000	B40-7112B-80	SCJN-1000-01
16438FIL	OSPP25000000101500 0E0F000	B40-7112B-80	SCJN-1000-01-ST
1643FIL	OSPP250000001020000000000	B416AB549F	SCJN-100-01
1643FIL	OSPP250000001020000000000	B416AB549F	SCJN-100-01-ST
16443FIL	OSPP250000001020001000000	B416AXXXXF	SCJN-100-01-WEB
16443FIL	OSPP250000001020001000000	B416AXXXXF	SCJN-100-PQC
16451FIL	OSPP250000001040000000000	B426AB549F	SCJN-400-01
16451FIL	OSPP250000001040000000000	B426AB549F	SCJN-400-01-JCB
16454FIL	OSPP250000001047000000000	B426AXXXXF	SCJN-400-01-ST
16454FIL	OSPP250000001047000000000	B426AXXXXF	SCJN-600-01
164-5570	OSPP250000001050000000000	B43003-100A	SCJN-600-01-ST
164576-01	OSPP250000001050000000000	B43003-100A	SCJN-600-01-WEB

1646FIL	OSPP250000001060000000000	B43003BXP	SCJN-KIT-016
1646FIL	OSPP250000001060000000000	B43003BXP	SCJN-KIT-100
1646FIL	OSPP250000001086000000000	B43003BXS	SCJN-KIT-100-PQC
1646FIL	OSPP250000001086000000000	B43003BXS	SCJN-KIT-400
16475FIL	OSPP250000001086003003000	B43003BYS	SCJN-KIT-400-PQC
16475FIL	OSPP250000001086003003000	B43003BYS	SCJN-KIT-600
16476FIL	OSPP250000001090000F00000	B43003BZS	SCJN-KIT-600-PQC
16476FIL	OSPP250000001090000F00000	B43003BZS	SCJN-RUBBER
16478FIL	OSPP250000001100000000000	B43003CP	SCJR-0230-02
16478FIL	OSPP250000001100000000000	B43003CP	SCJR-5800-02
16479FIL	OSPP25000000110000000F000	B43003CS	SCJR-8700-02
16479FIL	OSPP25000000110000000F000	B43003CS	SCJR-8700-02-MC
16483FIL	OSPP250000001100000E0F000	B43003DF	SCJR-8700-02-WEB
16483FIL	OSPP250000001100000E0F000	B43003DF	SCK-002
16484FIL	OSPP250000001100006000000	B43003ES	SCK-002-08
16484FIL	OSPP250000001100006000000	B43003ES	SCK-002-08-ST
16485FIL	OSPP250000001103000000000	B43003FP	SCK-002-08-WEB
16485FIL	OSPP250000001103000000000	B43003FP	SCK-006
16498FIL	OSPP250000001110000000000	B43003FS	SCK-008
16498FIL	OSPP250000001110000000000	B43003FS	SCK-009-ST
16499FIL	OSPP250000001120000000000	B43003HXP	SCK-045
16499FIL	OSPP250000001120000000000	B43003HXP	SCK-055
16-4G4MK4S	OSPP250000001140000000000	B43003HXS	SCK-100-02-11
16-4K6OO4MXS	OSPP250000001140000000000	B43003HXS	SCK-100-05-02
16-4K6PP4MXS	OSPP250000001150000000000	B43003LP	SCK-102-02-08
16-4R6O4MXS	OSPP250000001150000000000	B43003LP	SCK-102-02-08-ST
16-4R6P4MLOS	OSPP250000001150000200000	B43003LS	SCK-102-02-08-WEB
16-4R6P4MXS	OSPP250000001150000200000	B43003LS	SCK-102-02-11
16-4RB-825	OSPP25000000115000080F000	B43003PP	SCK-102-03-02
16-4TRMTXSS	OSPP25000000115000080F000	B43003PP	SCK-102-03-02-ST
1651FIL	OSPP250000001150003000000	B43003PS	SCK-102-03-02-WEB
1651FIL	OSPP250000001150003000000	B43003PS	SCK-102-05-02
1653-00500	OSPP250000001155000000000	B43003RP	SCK-102-05-12
1653-00500	OSPP250000001155000000000	B43003RP	SCK-102-05-12-ST
1653-00580	OSPP250000001170000E00000	B43003RS	SCK-102-05-12-WEB
1653-00580	OSPP250000001170000E00000	B43003RS	SCK-102-06-12
1653-00900	OSPP250000001200000000000	B43003RTS	SCK-102-08-02
1653-00900	OSPP250000001200000000000	B43003RTS	SCK-102-10-02
1653FIL	OSPP25000000120000000F000	B43003W	SCK-102-10-12
1653FIL	OSPP25000000120000000F000	B43003W	SCK-102-15-02
1655FIL	OSPP250000001200000200000	B43004-100A	SCK-145
1655FIL	OSPP250000001200000200000	B43004-100A	SCK-155
16-6 F5OG5-S	OSPP250000001200000600000	B43004BXP	SCK-313-01-02-VEST
16-6 FHC-SS	OSPP250000001200000600000	B43004BXP	SCK-313-02-31
16-6 MHN-SS	OSPP250000001200000D00000	B43004BXS	SCK-313-02-31-ST
16-6 RB-S	OSPP250000001200000D00000	B43004BXS	SCK-313-02-31-WEB
16-6 RB-SS	OSPP250000001200000E0F000	B43004CS	SCK-315-02-31
16-6-16JMTXS	OSPP250000001200000E0F000	B43004CS	SCK-315-02-34
1661FIL	OSPP250000001200000G00000	B43004D-50	SCK-318-05-21
1661FIL	OSPP250000001200000G00000	B43004D-50	SCK-318-05-21-ST
16623-01036	OSPP250000001200000G0F000	B43004DD	SCK-318-05-21-WEB
16623-01036	OSPP250000001200000G0F000	B43004DD	SCK-400-02-45
16623-01365	OSPP250000001200001000000	B43004DF	SCK-400-02-55

16623-01365	OSPP250000001200001000000	B43004DF	SCK-400-02-56
16623-06000	OSPP250000001200100000000	B43004ES	SCK-400-05-45
16623-06000	OSPP250000001200100000000	B43004ES	SCK-400-05-55
16627-01350	OSPP250000001200300200000	B43004FP	SCK-400-05-56
16627-01350	OSPP250000001200300200000	B43004FP	SCK-400-10-45
16627-04000	OSPP250000001210000000000	B43004FS	SCK-400-10-55
16627-04000	OSPP250000001210000000000	B43004FS	SCK-400-10-56
16630-04592	OSPP250000001220000000000	B43004HXP	SCK-401-0.3-Y
16630-04592	OSPP250000001220000000000	B43004HXP	SCK-401-0.5-4F-4M
1663FIL	OSPP250000001220200000000	B43004HXS	SCK-401-0.5-4F-4M-ST
1663FIL	OSPP250000001220200000000	B43004HXS	SCK-401-02-4F-4M
16646FIL	OSPP250000001245000G00000	B43004HYP	SCK-401-05-4F-4M
16646FIL	OSPP250000001245000G00000	B43004HYP	SCK-401-05-4F-4M-ST
1665FIL	OSPP250000001250000000000	B43004LS	SCK-401-10-4F-4M
1665FIL	OSPP250000001250000000000	B43004LS	SCK-401-10-4F-4M-ST
16-6-6 JLZ-SS	OSPP250000001250000E00000	B43004PP	SCK-401-20-4F-4M
166864-01	OSPP250000001250000E00000	B43004PP	SCK-401-20-4F-4M-ST
1668FIL	OSPP250000001250001000000X	B43004PS	SCK-401-4M
1668FIL	OSPP250000001250001000000X	B43004PS	SCK-401-R
1669FIL	OSPP250000001250006000000	B43004RF	SCK-402-02-07
1669FIL	OSPP250000001250006000000	B43004RF	SCK-402-02-07-ST
16-6G4MK4S	OSPP250000001260000000000	B43004RP	SCK-410-03-45-45
16-6G4MK4SS	OSPP250000001260000000000	B43004RP	SCK-410-10-45-45
16-6TRMTXSS	OSPP250000001265000E0F000	B43004RS	SCKIT-152-600-WEB
16-6TRTXS	OSPP250000001265000E0F000	B43004RS	SCKIT-155-0-00
167-01095-8	OSPP250000001270000E0F000	B43004RTS	SCKIT-155-0-03-PQC
167-01112-8	OSPP250000001270000E0F000	B43004RTS	SCKIT-155-0-04-PQC
1672FIL	OSPP250000001285000200000	B43004W	SCKIT-155-0-600
1672FIL	OSPP250000001285000200000	B43004W	SCKIT-155-0-PQ
1673-00230	OSPP250000001285000E0F000	B43005B	SCKIT-155-2-00
1673-00230	OSPP250000001285000E0F000	B43005B	SCKIT-330-00
1673-00250	OSPP250000001290000000000	B436000XXF	SCKIT-330-BOX2C
1673-00250	OSPP250000001290000000000	B436000XXF	SCKIT-340-00
1673-00300	OSPP250000001300000000000	B43603-100A	SCKIT-340-03-PQC
1673-00300	OSPP250000001300000000000	B43603-100A	SCKIT-340-PTQ
1673-00380	OSPP250000001300000000F000	B43603BX	SCKIT-500-00-00
1673-00380	OSPP250000001300000000F000	B43603BX	SCKIT-500-00-00-BOX1
1673-00400	OSPP250000001300000200000	B43603BZ	SCKIT-500-00-00-BW1
1673-00400	OSPP250000001300000200000	B43603BZ	SCKIT-500-00-00-FU-DZ
1673-00470	OSPP250000001300000300000	B43603C	SCKIT-500-01-00
1673-00470	OSPP250000001300000300000	B43603C	SCKIT-500-01-00-BOX2
1673-00580	OSPP250000001300000608000	B43603E	SCKIT-500-01-01
1673-00580	OSPP250000001300000608000	B43603E	SCKIT-500-01-01-DEMO
1673-00600	OSPP250000001300000700000	B43603F	SCKIT-500-01-01-LEA
1673-00600	OSPP250000001300000700000	B43603F	SCKIT-9068
1673-00830	OSPP250000001300000A0F000	B43603L	SCKIT-9074
1673-00830	OSPP250000001300000A0F000	B43603L	SCKIT-FLOW-LEB
1673-01000	OSPP250000001300003000000	B43603P	SCKIT-PSK-13
1673-01000	OSPP250000001300003000000	B43603P	SCLSD-250-00-07
1673-01100	OSPP250000001320000000000	B43603R	SCLSD-250-10-05
1673-01100	OSPP250000001320000000000	B43603R	SCLSD-250-10-07
1673-01350	OSPP250000001320006000000	B43603T	SCLSD-370-00-07
1673-01350	OSPP250000001320006000000	B43603T	SCLSD-370-10-05

1673-01550	OSPP250000001325000F0F000	B44061B	SCLSD-370-10-07
1673-01550	OSPP250000001325000F0F000	B44061B	SCLSD-520-00-07
16733FIL	OSPP250000001330000000000	B446000XXF	SCLSD-520-10-05
16733FIL	OSPP250000001330000000000	B446000XXF	SCLSD-520-10-07
16740FIL	OSPP250000001330001000000	B456AB549F	SCLTSD-250-00-07
16740FIL	OSPP250000001330001000000	B456AB549F	SCLTSD-250-10-05
16744FIL	OSPP250000001330001000M00	B456AXXXXF	SCLTSD-250-10-07
16744FIL	OSPP250000001330001000M00	B456AXXXXF	SCLTSD-250-30-07-WA1
16752FIL	OSPP250000001350000000000	B466AB549F	SCLTSD-250-XX-07-S1
16752FIL	OSPP250000001350000000000	B466AB549F	SCLTSD-370-00-07
16754FIL	OSPP250000001350000200000	B466AXXXXF	SCLTSD-370-10-05
16754FIL	OSPP250000001350000200000	B466AXXXXF	SCLTSD-370-10-07
16755FIL	OSPP250000001350003A00000	B476AB549F	SCLTSD-370-30-07-WA1
16755FIL	OSPP250000001350003A00000	B476AB549F	SCLTSD-370-30-07-WA2
16765FIL	OSPP250000001350007000000	B476AXXXXF	SCLTSD-520-00-07
16765FIL	OSPP250000001350007000000	B476AXXXXF	SCLTSD-520-10-05
16770FIL	OSPP250000001355000000000	B486000XXF	SCLTSD-520-10-07
16770FIL	OSPP250000001355000000000	B486000XXF	SCLTSD-520-XX-07-S1
16771FIL	OSPP250000001360000000000	B4G6AB549F	SCLV-DISC-300
16771FIL	OSPP250000001360000000000	B4G6AB549F	SCLV-DISC-800
16773FIL	OSPP250000001370000000000	B4M6000XXF	SCLV-PTQ-300
16773FIL	OSPP250000001370000000000	B4M6000XXF	SCLV-PTQ-300-C2-05
16774FIL	OSPP250000001375000000000	B4P6000XXF	SCLV-PTQ-600
16774FIL	OSPP250000001375000000000	B4P6000XXF	SCLV-PTQ-750
16781FIL	OSPP250000000137500000F000	B4R6AB549F	SCLV-PTQ-750-C2-05
16781FIL	OSPP250000000137500000F000	B4R6AB549F	SCLV-PTQ-KIT-300
16787FIL	OSPP250000001388000000000	B4R6AXXXXF	SCLV-PTQ-KIT-600-JCB
16787FIL	OSPP250000001388000000000	B4R6AXXXXF	SCLV-PTQ-KIT-750
16-8 ELZ-SS	OSPP250000001390000000000	B4T6AB549F	SCM10-316
16-8 F5OG5-S	OSPP250000001390000000000	B4T6AB549F	SCM10-6MO
16-8 F5OX-S	OSPP250000001400000000000	B4T6AXXXXF	SCM10-825
16-8 FBZ-SS	OSPP250000001400000000000	B4T6AXXXXF	SCM10-B
16-8 FHC-6MO	OSPP250000001400000000M00	B4U6000XXF	SCM10-IIY
16-8 FHC-M	OSPP250000001400000000M00	B4U6000XXF	SCM10-M
16-8 FHC-SS	OSPP250000000140000000F000	B50-7112B-100	SCM10-NNR
16-8 HBZ-SS	OSPP250000000140000000F000	B50-7112B-100	SCM10-NNR-NC
16-8 MHN-B	OSPP250000001400000200000	B50-7112B-50	SCM10-TTZ
16-8 MHN-M	OSPP250000001400000200000	B50-7112B-50	SCM12-316
16-8 MHN-SS	OSPP250000001400000200M00	B511ACH53C	SCM12-316-OXY
16-8 RA-6MO	OSPP250000001400000200M00	B511ACH53C	SCM12-6MO
16-8 RA-M	OSPP250000001400000600000	B516BB549C	SCM12-6MONC
16-8 RA-SS	OSPP250000001400000600000	B516BB549C	SCM12-825
16-8 RB-6MO	OSPP250000001410000000000	B521BB549C	SCM12-B
16-8 RB-B	OSPP250000001410000000000	B521BB549C	SCM12-IIY
16-8 RB-HC	OSPP250000001420000000000	B526BCB49C	SCM12-M
16-8 RB-M	OSPP250000001420000000000	B526BCB49C	SCM12-NNR
16-8 RB-S	OSPP250000001420001000000	B526BCNXXC	SCM12-TTZ
16-8 RB-SS	OSPP250000001420001000000	B526BCNXXC	SCM14-316
16-8 RB-TI	OSPP250000001420003000000	B53003CS	SCM14-825
16-8 TL-S	OSPP250000001420003000000	B53003CS	SCM14-MMX
16-8 TRBU-S	OSPP250000001450003000000	B53003FP	SCM-152-0-02-ST
16-8 TRBZ-SS	OSPP250000001450003000000	B53003FP	SCM-152-1-02-ST
16-8 TRLO-S	OSPP250000001460000000000	B53003FS	SCM-152-2-02-ST

16-8 TRTX-S	OSPP250000001460000000000	B53003FS	SCM-152-RUBBER
16-8 TRW-SS	OSPP250000001465000000000	B53003G	SCM15-316
168-00036-8	OSPP250000001465000000000	B53003G	SCM-155-0-02
168-00138-8	OSPP250000001480000000000	B53003HX	SCM-155-2-05
168-00152-8	OSPP250000001480000000000	B53003HX	SCM15-B
168-00394-8	OSPP250000001486000E00000	B53003HXP	SCM16-316
168-00402-8	OSPP250000001486000E00000	B53003HXP	SCM16-6MO
168-00434-8	OSPP250000001486000E0F000	B53003HXS	SCM16-B
168-00518-8	OSPP250000001486000E0F000	B53003HXS	SCM16-MMX
168-00523-8	OSPP250000001499000000000	B53003HY	SCM16-TTZ
168-00526-8	OSPP250000001499000000000	B53003HY	SCM18-1.0MMOR-316
168-00567-8	OSPP250000001500000000000	B53003J	SCM18-316
168-00570-8	OSPP250000001500000000000	B53003J	SCM18-6MO
168-00577-8	OSPP25000000150000000F000	B53003L	SCM18-B
168-00587-8	OSPP25000000150000000F000	B53003L	SCM18-TTZ
168-00593-8	OSPP250000001500000200000	B53003LP	SCM20-316
16-8-16 JLZ-SS	OSPP250000001500000200000	B53003LP	SCM20-6MO
16818FIL	OSPP250000001500000E00000	B53003LS	SCM20-825
16818FIL	OSPP250000001500000E00000	B53003LS	SCM20-B
16819FIL	OSPP250000001500001000000	B53003LT	SCM20-MMX
16819FIL	OSPP250000001500001000000	B53003LT	SCM20-TTZ
1681FIL	OSPP250000001500300000000	B53003LTBS1	SCM22-316
1681FIL	OSPP250000001500300000000	B53003LTBS1	SCM22-B
16820FIL	OSPP250000001532000000000	B53003LX	SCM2-316
16820FIL	OSPP250000001532000000000	B53003LX	SCM25-316
16826-10-10-SM	OSPP250000001540000000000	B53003LXBS1	SCM25-6MO
16826-4-4-SM	OSPP250000001540000000000	B53003LXBS1	SCM25-825
16826-8-10	OSPP250000001550000000000	B53003LXBS2	SCM25-B
16826-8-8-SM	OSPP250000001550000000000	B53003LXBS2	SCM25-IIY
1683FIL	OSPP250000001550001000000	B53003PP	SCM25-MMX
1683FIL	OSPP250000001550001000000	B53003PP	SCM25-NNR
16843-8-8C-SM	OSPP250000001550003000000	B53003PS	SCM25-TTZ
16846-10-10	OSPP250000001550003000000	B53003PS	SCM-330-2-02
16846-10-12	OSPP250000001590003000000	B53003RS	SCM3-316
16846-10-6	OSPP250000001590003000000	B53003RS	SCM-340-2-02
16846-10-8	OSPP250000001600000000000	B53004A	SCM3-NNR
16846-4-4	OSPP250000001600000000000	B53004A	SCM4-316
16846-4-6	OSPP250000001600000200000	B53004CS	SCM4-B
16846-5-4	OSPP250000001600000200000	B53004CS	SCM-500-00-00
16846-5-5	OSPP250000001600001000000	B53004FP	SCM-500-01-00
16846-5-6	OSPP250000001600001000000	B53004FP	SCM-500-01-01
16846-8-10	OSPP25000000160000 1000M00	B53004FS	SCM6-316
16846-8-12	OSPP25000000160000 1000M00	B53004FS	SCM6-316-OXY
16846-8-5	OSPP250000001600006000000	B53004G	SCM6-6MO
16846-8-6	OSPP250000001600006000000	B53004G	SCM6-825
16846-8-8	OSPP250000001620000000000	B53004GX	SCM6-B
16848-10-10	OSPP250000001620000000000	B53004GX	SCM6-IIY
16848-10-12	OSPP250000001650000000000	B53004GY	SCM6-M
16848-10-6	OSPP250000001650000000000	B53004GY	SCM6-NNR
16848-10-8	OSPP250000001650000E00000	B53004HX	SCM6-TTZ
16848-4-4	OSPP250000001650000E00000	B53004HX	SCM8-316
16848-4-4C	OSPP250000001650000K00000	B53004HXP	SCM8-316-OXY
16848-4-6	OSPP250000001650000K00000	B53004HXP	SCM8-6MO

16848-5-4	OSPP250000001660000000000	B53004HXS	SCM8-B
16848-5-5	OSPP250000001660000000000	B53004HXS	SCM8-IIY
16848-5-6	OSPP250000001680000000000	B53004HXX	SCM8-M
16848-8-10	OSPP250000001680000000000	B53004HXX	SCMA-FCU-600
16848-8-12	OSPP250000001700000000000	B53004J	SCMA-FCU-600-ST
16848-8-5	OSPP250000001700000000000	B53004J	SCMA-TR-250-ST
16848-8-6	OSPP25000000170000000F000	B53004L	SCMA-VADC-600
16848-8-6C	OSPP25000000170000000F000	B53004L	SCM-MASTER-CASE-3K
16848-8-8	OSPP250000001700000200000	B53004LBS2	SCM-MASTER-CASE-4K
16848-8-8C	OSPP250000001700000200000	B53004LBS2	SCM-MASTER-CASE-6K
16866FIL	OSPP250000001700001000000	B53004LN	SCOTC-1000-00-07
16866FIL	OSPP250000001700001000000	B53004LN	SCOTC-1000-10-05
16868FIL	OSPP250000001700006000000	B53004LP	SCOTC-1000-10-07
16868FIL	OSPP250000001700006000000	B53004LP	SCOTC-250-00-05
16870-10-10C-SM	OSPP250000001700406000000	B53004LS	SCOTC-250-00-07
16-8-8 JLZ-SS	OSPP250000001700406000000	B53004LS	SCOTC-250-10-05
1688FIL	OSPP250000001710000F00000	B53004LT	SCOTC-250-10-07
1688FIL	OSPP250000001710000F00000	B53004LT	SCOTC-370-00-05
16899FIL	OSPP250000001710106000000	B53004LTBS2	SCOTC-370-00-07
16899FIL	OSPP250000001710106000000	B53004LTBS2	SCOTC-370-10-05
16-8F42EDMLOS	OSPP250000001730000000000	B53004LW	SCOTC-370-10-07
16-8F42EDMXS	OSPP250000001730000000000	B53004LW	SCOTC-520-00-07
16-8F42EDMXSS	OSPP250000001740000000000	B53004LX	SCOTC-520-10-05
16-8F4OMXS	OSPP250000001740000000000	B53004LX	SCOTC-520-10-07
16-8FMTXB	OSPP250000001760000000000	B53004LXBS2	SCOTC-800-00-05
16-8FMTXSS	OSPP250000001760000000000	B53004LXBS2	SCOTC-800-00-07
16-8G4MK4S	OSPP250000001800000000000	B53004LY	SCOTC-800-10-05
16-8G4MK4SS	OSPP250000001800000000000	B53004LY	SCOTC-800-10-07
16-8HMK4S	OSPP250000001800000200000	B53004LZ	SCP-004-14-07
16-8HMK4SS	OSPP250000001800000200000	B53004LZ	SCP-004-24-06
16-8RB-825	OSPP250000001800006000000	B53004PP	SCP-004-34-07
16-8TRMLOSS	OSPP250000001800006000000	B53004PP	SCP-004-44-06
16-8TRMTXSS	OSPP250000001804360BB0000	B53004PS	SCP-006-14-06
16906FIL	OSPP250000001804360BB0000	B53004PS	SCP-006-14-07
16906FIL	OSPP250000001805000000000	B53004PX	SCP-006-34-06
16918FIL	OSPP250000001805000000000	B53004PX	SCP-006-44-07
16918FIL	OSPP250000001830003000000	B53004PY	SCP-010-14-06
1693FIL	OSPP250000001830003000000	B53004PY	SCP01-016-14-07
1693FIL	OSPP250000001860000000000	B53004RS	SCP01-016-24-06
1696FIL	OSPP250000001860000000000	B53004RS	SCP01-016-24-07
1696FIL	OSPP250000001880000000000	B53005A	SCP01-016-34-06
1697FIL	OSPP250000001880000000000	B53005A	SCP01-016-44-06
1697FIL	OSPP250000001900000000000	B53014MTF	SCP-010-24-06
1698FIL	OSPP250000001900000000000	B53014MTF	SCP01-0250P-25-07
1698FIL	OSPP250000001909001000000	B53413-103	SCP01-025-14-06
16A43-12-12-1P	OSPP250000001909001000000	B53413-103	SCP01-025-14-07
16A43-8-12-1P	OSPP250000001930000000000	B53413MS	SCP01-025-24-06
16A46-12-12	OSPP250000001930000000000	B53413MS	SCP01-025-34-07
16A46-12-16	OSPP250000001940001000000	B53413MSA	SCP01-025-44-07
16A46-16-16	OSPP250000001940001000000	B53413MSA	SCP-010-34-06
16A46-20-20	OSPP250000001948001000000	B53413MTA	SCP-010-34-07
16A46-8-8	OSPP250000001948001000000	B53413MTA	SCP01-040-34-07
16A48-12-10	OSPP250000001948001000M00	B53413MTF	SCP01-040-44-06

16A48-12-12	OSPP250000001948001000M00	B53413MTF	SCP01-040-44-07
16A48-12-16	OSPP250000001950000000000	B53413MTL	SCP-010-44-06
16A48-16-16	OSPP250000001950000000000	B53413MTL	SCP-010-44-07
16A48-20-20	OSPP250000001950000E00000	B53414-103	SCP01-060-14-06
16A48-24-24	OSPP250000001950000E00000	B53414-103	SCP01-060-14-07
16A48-32-32	OSPP250000001970000000000	B53414MS	SCP01-060-24-07
16A48-8-8	OSPP250000001970000000000	B53414MS	SCP01-060-34-06
16A70-12-10-1P	OSPP250000002000000000000	B53414MTA	SCP01-060-34-07
16A70-12-12-1P	OSPP250000002000000000000	B53414MTA	SCP01-060-44-06
16A70-12-12C-1P	OSPP25000000200000000F000	B53414MTF	SCP01-060-44-07
16A70-12-16-1P	OSPP25000000200000000F000	B53414MTF	SCP01-100-24-06
16A70-12-8-1P	OSPP250000002000000200000	B53414MTL	SCP01-100-24-07
16A70-16-10-1P	OSPP250000002000000200000	B53414MTL	SCP01-100-34-06
16A70-16-12-1P	OSPP250000002000000600000	B53414S	SCP01-100-34-07
16A70-16-16-1P	OSPP250000002000000600000	B53414S	SCP01-100-44-06
16A70-16-16C-1P	OSPP250000002000000E00000	B53424MS	SCP01-100-44-07
16A70-20-16-1P	OSPP250000002000000E00000	B53424MS	SCP01-160-14-06
16A70-20-20C-1P	OSPP250000002000300E00000	B53424MTF	SCP01-160-24-06
16A70-8-10-1P	OSPP250000002000300E00000	B53424MTF	SCP01-160-24-07
16A70-8-12-1P	OSPP250000002020001000000	B53424XMTF	SCP01-160-34-06
16A70-8-8-1P	OSPP250000002020001000000	B53424XMTF	SCP01-160-34-07
16A71-12-12-1P	OSPP250000002070000000000	B53424XMTL	SCP01-160-44-06
16A71-16-12-1P	OSPP250000002070000000000	B53424XMTL	SCP01-160-44-07
16A71-16-16-1P	OSPP250000002080000E0F000	B542000XXC	SCP01-250-14-06
16A71-20-20-1P	OSPP250000002080000E0F000	B542000XXC	SCP01-250-14-07
16A71-24-24	OSPP250000002100000000000	B548-01DHC	SCP01-250-24-06
16A71-32-32	OSPP250000002100000000000	B548-01DHC	SCP01-250-24-07
16A73-12-12-1P	OSPP250000002120000E0F000	B548-02AGC	SCP01-250-34-06
16A73-12-16-1P	OSPP250000002120000E0F000	B548-02AGC	SCP01-250-34-07
16A73-16-12-1P	OSPP250000002200000000000	B548G02AHC	SCP01-250-44-06
16A73-16-16-1P	OSPP250000002200000000000	B548G02AHC	SCP01-250-44-07
16A73-16-20-1P	OSPP250000002200000200000	B556BCB49C	SCP01-3000P-25-07
16A73-20-16-1P	OSPP250000002200000200000	B556BCB49C	SCP01-400-14-06
16A73-20-20-1P	OSPP250000002220000200000	B556BCNXXC	SCP01-400-14-07
16A73-20-24-1P	OSPP250000002220000200000	B556BCNXXC	SCP01-400-24-06
16A73-24-20-1P	OSPP250000002230000000000	B560/26.6	SCP01-400-24-07
16A73-24-24-1P	OSPP250000002230000000000	B560/33.6	SCP01-400-34-06
16A73-32-24-1P	OSPP250000002275000000000	B566BCB49C	SCP01-400-34-07
16A73-32-32	OSPP250000002275000000000	B566BCB49C	SCP01-400-44-06
16A77-12-10	OSPP250000002280000E00000	B566BCNXXC	SCP01-400-44-07
16A77-12-12	OSPP250000002280000E00000	B566BCNXXC	SCP-015-74-02
16A77-12-8	OSPP250000002295000E0F000	B576BCB49C	SCP01-600-14-06
16A77-16-12	OSPP250000002295000E0F000	B576BCB49C	SCP01-600-14-07
16A77-16-16	OSPP250000002300000200000	B576BCNXXC	SCP01-600-24-06
16A77-16-20	OSPP250000002300000200000	B576BCNXXC	SCP01-600-24-07
16A77-20-16	OSPP250000002350000000000	B592000XXC	SCP01-600-34-06
16A77-20-20	OSPP250000002350000000000	B592000XXC	SCP01-600-34-07
16A77-24-20	OSPP250000002390000000000	B5E6BCB49C	SCP01-600-44-06
16A77-8-8	OSPP250000002390000000000	B5E6BCB49C	SCP01-600-44-07
16A78-12-12-1P	OSPP250000002400000E00000	B5E6BCNXXC	SCP-016-14-07
16A78-16-12-1P	OSPP250000002400000E00000	B5E6BCNXXC	SCP-016-C4-05
16A78-16-16-1P	OSPP250000002450000000000	B5J6BCB49C	SCP02-250-34-05
16A78-16-20-1P	OSPP250000002450000000000	B5J6BCB49C	SCP02-400-34-0E

16A78-20-16-1P	OSPP250000002500000000000	B5J6BCNXXC	SCP-040-34-06-EX
16A78-20-20-1P	OSPP250000002500000000000	B5J6BCNXXC	SCP-060-74-02
16A78-20-24-1P	OSPP250000002500000E00000	B5V6BCB49C	SCP-060-B4-07-MO
16A78-24-20-1P	OSPP250000002500000E00000	B5V6BCB49C	SCP-060-C4-05
16A78-24-24	OSPP250000002650000000000	B5V6BCNXXC	SCP-1000-74-02
16A78-32-24	OSPP250000002650000000000	B5V6BCNXXC	SCP-1000-C4-05
16A79-12-12	OSPP250000002700000000000	B612ADA49A	SCP-150-74-02
16A79-12-16	OSPP250000002700000000000	B612ADA49A	SCP-160-C4-05
16A79-16-12	OSPP250000002800000000000	B67774-001	SCP-250-A4-07-UCC
16A79-16-16	OSPP250000002800000000000	B67865-100	SCP-400-34-07-MO
16A79-16-20	OSPP250000002900000000000	B67865-200	SCP-400-34-07-UCC
16A79-20-16	OSPP250000002900000000000	B67865-400	SCP-400-74-02
16A79-20-20	OSPP25000000290000000F000	B67870B-100	SCP-400-B4-07-MO
16A79-24-20	OSPP25000000290000000F000	B67870B-100-001	SCP-400-C4-05
16A79-24-24	OSPP250000002915000000000	B67870B-200-001	SCP-600-74-02
16A9X-16-16	OSPP250000002915000000000	B67870B-300	SCP-600-74-02-PQC
16A-C16L-1/3-EPR-SS	OSPP25000000291500000F000	B67870B-400	SCP-600-C4-05
16A-C16L-1/3-SS	OSPP25000000291500000F000	B68206	SCP8181CE
16A-C16L-1/3-SS-C3	OSPP250000002950000000000	B68207	SCP-8968
16A-C16L-10-EPR-SS	OSPP250000002950000000000	B6-HANDLE-BLACK	SCP-9001
16A-C16L-10-SS	OSPP25000000295000000F000	B6-HANDLE-BLUE	SCP-9014
16A-C16L-1-EPR-SS	OSPP25000000295000000F000	B6-HANDLE-GREEN	SCP-9092
16A-C16L-1-SS	OSPP250000002972360BB0000	B6-HANDLE-RED	SCPS01-250-24-05
16A-C16L-1-SS-C3	OSPP250000002972360BB0000	B6-HANDLE-SS	SCPS01-400-24-05
16A-C16L-50-SS	OSPP250000003000000000000	B6-HANDLE-WHITE	SCPS01-PRG-KIT
16A-C16L-5-EPR-SS	OSPP250000003000000000000	B6-HANDLE-YELLOW	SCPSD-0030P-17-25
16A-C16L-5-SS	OSPP250000003400000000000	B72C12-12F	SCPSD-004-04-16
16A-C16L-75-SS	OSPP250000003400000000000	B72C8-8F	SCPSD-004-04-17
16A-F16L-100-SS	OSPP250000003400000E00000	B73006	SCPSD-004-04-27
16A-F16L-10-EPR-SS	OSPP250000003400000E00000	B73006	SCPSD-004-14-15
16A-F16L-10-SS	OSPP25000000345000000F000	B732-504	SCPSD-004-14-17
16A-F16L-1-EPR-SS	OSPP25000000345000000F000	B732-504	SCPSD-004-14-25
16A-F16L-1-SS	OSPP250000004050000B00000	B732-505	SCPSD-004-14-27
16A-F16L-250-EPR-SS	OSPP250000004050000B00000	B732-505	SCPSD-010-04-16
16A-F16L-50-SS	OSPP250000004200000000000	B75G02WJCR	SCPSD-010-04-17
16ANX-20-20	OSPP250000004200000000000	B75G02WJCR	SCPSD-010-04-26
16AP1CF	OSPP250000004280000000000	B75G03BJC	SCPSD-010-04-27
16AP2CF	OSPP250000004280000000000	B75G03BJC	SCPSD-010-04-27-S1
16AS6-32-32	OSPP250000004400000000000	B75G04BJC	SCPSD-010-14-15
16A-SWB16L-RT-V-SS	OSPP250000004400000000000	B75G04BJC	SCPSD-010-14-17
16A-SWB16L-RT-V-SS-C3	OSPP250000004532000D00000	B7796	SCPSD-010-14-25
16A-U16LB-G-SS	OSPP250000004532000D00000	B7796	SCPSD-010-14-27
16A-U16LB-T-SS	OSPP250000004700000000000	B78010P5008	SCPSD-016-04-16
16A-U16LB-T-SS-C3	OSPP250000004700000000000	B7V8BB549A	SCPSD-016-04-17
16A-U16LR-G-SS-HT	OSPP250000005000000000000	B7V8BB549A	SCPSD-016-04-27
16A-U16LR-T-SS	OSPP250000005000000000000	B8266	SCPSD-016-14-15
16BBMTXS	OSPP250000005000010000000	B84609	SCPSD-016-14-15-LI
16BBMTXSBP	OSPP250000005000010000000	B84708	SCPSD-016-14-17
16BBMTXSS	OSPP250000006000000000000	B84779	SCPSD-016-14-25
16BC16-316	OSPP250000006000000000000	B84788	SCPSD-016-14-27
16BC16-6MO	OSPP250000009000000000000	B8504-32ER20-099	SCPSD-0250P-07-27
16BC16-MMX	OSPP250000009000000000000	B85617	SCPSD-0250P-14-25
16BC16-TTZ	OSPP250000009000000200000	B8786	SCPSD-0250P-17-25

16BF16-316	OSPP250000009000000200000	B8801-15-56	SCPSD-0250P-17-27
16BF16-6MO	OSPP250000100100000000000	B8802-15-51	SCPSD-060-04-16
16BLEN16-316	OSPP250000100100000000000	B8802-25-66	SCPSD-060-04-17
16BLP16-316	OSPP250000100140000000000	B8802-25-70	SCPSD-060-04-26
16BMLS	OSPP250000100140000000000	B8868-36-60	SCPSD-060-04-27
16BMLSBP	OSPP250000100160000200000	B8936BW	SCPSD-060-14-15
16BMLSBPBLKOEL	OSPP250000100160000200000	B8936BW	SCPSD-060-14-17
16BMLSS	OSPP250000100160100200000	B89603	SCPSD-060-14-25
16BMTXS	OSPP250000100160100200000	B89910	SCPSD-060-14-27
16BMTXSBP	OSPP250000100200001000000	B8-HANDLE-BLACK	SCPSD-100-04-16
16BMTXSS	OSPP250000100200001000000	B8-HANDLE-BLUE	SCPSD-100-04-17
16BUWS	OSPP250000100250000000000	B8-HANDLE-GREEN	SCPSD-100-04-26
16C3MXS	OSPP250000100250000000000	B8-HANDLE-RED	SCPSD-100-04-27
16C3P4S	OSPP250000100275000000000	B8-HANDLE-SS	SCPSD-1000P-07-27
16C3T4S	OSPP250000100275000000000	B8-HANDLE-WHITE	SCPSD-1000P-17-25
16C4OMLOS	OSPP250000100280000000000	B8-HANDLE-YELLOW	SCPSD-1000P-17-27
16C4OMLOSS	OSPP250000100280000000000	B91701	SCPSD-100-14-15
16C4OMXS	OSPP250000100300000000F000	BA059048U454	SCPSD-100-14-17
16C4OMXSBP	OSPP250000100300000000F000	BA388989U001	SCPSD-100-14-25
16C4OMXSS	OSPP250000100300000200000	BA465360U003	SCPSD-100-14-27
16C4OMXSV	OSPP250000100300000200000	BA465484U001	SCPSD-250-04-16
16C5OMLOS	OSPP250000100310000000000	BA465914U001	SCPSD-250-04-17
16C5OMLOSS	OSPP250000100310000000000	BA466746	SCPSD-250-04-17-BA1
16C5OMXS	OSPP250000100350000000000	BA466752	SCPSD-250-04-26
16C5OMXSS	OSPP250000100350000000000	BA467840U084	SCPSD-250-04-27
16C5OMXSV	OSPP250000100360000000000	BA468350	SCPSD-250-14-15
16C6MK4S	OSPP250000100360000000000	BA470112	SCPSD-250-14-15-ATP
16C6MK4SS	OSPP250000100365000000000	BA470290	SCPSD-250-14-17
16C6MLOS	OSPP250000100365000000000	BA470374	SCPSD-250-14-25
16C6MLOSS	OSPP250000100400000000000	BAA08LSORCF	SCPSD-250-14-27
16C6MLS	OSPP250000100400000000000	BAA12LSORCF	SCPSD-3000P-07-27
16C6MXS	OSPP250000100420000L00000	BAA16SORCF	SCPSD-3000P-17-25
16C6MXSBP	OSPP250000100420000L00000	BAA20SORCF	SCPSD-3000P-17-27
16C6MXSS	OSPP250000100420000L0F000	BAA25SORCF	SCPSD-400-04-16
16CMTXS	OSPP250000100420000L0F000	BAA30SORCF	SCPSD-400-04-17
16CMTXSS	OSPP250000100450000000000	BAA38SORCF	SCPSD-400-04-26
16CNMXS	OSPP250000100450000000000	BAA42LORCF	SCPSD-400-04-27
16CPM1CF	OSPP250000100570000000000	BACP1200S5N	SCPSD-400-14-15
16CPM1SS	OSPP250000100570000000000	BAE01B3R1C1	SCPSD-400-14-17
16CPM2CF	OSPP250000100585000000000	BAE01B3R5C1	SCPSD-400-14-25
16CPM2SS	OSPP250000100585000000000	BAE02B3R1C1	SCPSD-400-14-27
16DTA06P50G20A	OSPP250000100600000000000	BAE02B3R1V1	SCPSD-5000P-07-27
16DTA10P50G20A	OSPP250000100600000000000	BAE02B3R2C002	SCPSD-5000P-17-25
16DTAXXP50G20A	OSPP250000100600100200000	BAE02B3R5C1	SCPSD-5000P-17-27
16DTEA06	OSPP250000100600100200000	BAE04B3F1C1	SCPSD-600-04-16
16DTEA10Q	OSPP250000100650000000000	BAE04B3R1C1	SCPSD-600-04-17
16E6MK4S	OSPP250000100650000000000	BAE04B3R1C1/060	SCPSD-600-04-26
16ECR16-316	OSPP250000100700000000000	BAE04B3R1C1-CF	SCPSD-600-04-27
16EE16-316	OSPP250000100700000000000	BAE04B3R2C1	SCPSD-600-14-15
16EE16-6MO	OSPP250000100700000200000	BAE06B3R1C1	SCPSD-600-14-15-LI
16EE16-B	OSPP250000100700000200000	BAE10B3F1C1	SCPSD-600-14-17
16EE16-IIY	OSPP250000100740000000000	BAE10B3R1C1	SCPSD-600-14-25
16EE16-MMX	OSPP250000100740000000000	BAE10B3R1C1/100	SCPSD-600-14-27

16EE16-TTZ	OSPP250000100800000000000	BAE10B3R1M1	SCPSD-9000P-17-25
16EMK4S	OSPP250000100800000000000	BAE10B3R1V1	SCPSD-9000P-17-27
16EMK4SS	OSPP250000100850000000000	BAE10B3R2C1	SCPSD-9017
16EMLOSS	OSPP250000100850000000000	BAE10B3R5C1	SCPSDI-010-04-27
16EMTXS	OSPP250000100850000200000	BAE10B3T1C1	SCPSDI-010-14-17
16EMTXSBP	OSPP250000100850000200000	BAE10-SET170706	SCPSDI-010-14-17-H
16EMTXSS	OSPP250000100850000E00000	BAE20B3R1C1	SCPSDI-025-04-27
16ET16-316	OSPP250000100850000E00000	BAE20B3R1C1-SF	SCPSDI-100-14-17-H
16ET16-MMX	OSPP250000100885000000000	BAE20B3R1V1	SCPSDI-100-14-27
16ET16-NNR	OSPP250000100885000000000	BAE20B3R5C1	SCPSDI-250-04-17
16ET16-TTZ	OSPP250000100895000000000	BAE24B3R1C1	SCPSDI-250-04-27
16F24O2164A3FPH80	OSPP250000100895000000000	BAE24B3R2C1	SCPSDI-400-04-17
16F24O2164A3FPH80	OSPP250000100900000000000	BAE32B3R1C1	SCPSDI-600-14-17-H
16F3MK4S	OSPP250000100900000000000	BAE32B3R1V1	SCPT-015-02-02
16F3MK4SS	OSPP250000100900000200000	BAE32B3R2C1	SCPT-015-02-02-ST
16F3MP4SS	OSPP250000100900000200000	BAE50B3F1C1	SCPT-015-02-02-USA
16F3MXS	OSPP250000101000000E00000	BAE50B3M1C1	SCPT-015-02-02-WEB
16F3MXSS	OSPP250000101000000E00000	BAE50B3R1C1	SCPT-016-C2-05
16F3P4S	OSPP250000101070000000000	BAE50B3R1C1/090	SCPT-060-02-02
16F3T4S	OSPP250000101070000000000	BAE50B3R1C1/100	SCPT-060-02-02-PQC
16F42EDMLOS	OSPP250000101250001000000	BAE50B3R1C1/200	SCPT-060-02-02-USA
16F42EDMLOSS	OSPP250000101250001000000	BAE50B3R1V1	SCPT-060-02-02-WEB
16F42EDMXS	OSPP250000101300000E00000	BAE50B3R2C1	SCPT-060-C2-05
16F42EDMXSBP	OSPP250000101300000E00000	BAE-BK01NBR	SCPT-060-C2-05-PQC
16F42EDMXSS	OSPP250000101390000000000	BAE-BK02NBR	SCPT-1000-02-02
16F46-12-12	OSPP250000101390000000000	BAE-BK04NBR	SCPT-1000-02-02-WEB
16F46-16-16	OSPP250000101390001000000	BAE-BK06NBR	SCPT-1000-C2-05
16F46-8-10	OSPP250000101390001000000	BAE-BK10NBR	SCPT-150-02-02
16F48-12-12	OSPP250000101400000000000	BAE-BK20LTNBR	SCPT-150-02-02-PQC
16F48-16-16	OSPP250000101400000000000	BAE-BK20NBR	SCPT-150-02-02-ST
16F48-20-16	OSPP250000101400000200000	BAE-BK24NBR	SCPT-150-02-02-USA
16F48-20-20	OSPP250000101400000200000	BAE-BK32LTNBR	SCPT-150-02-02-WEB
16F48-24-24	OSPP250000101400010000000	BAE-BK32NBR	SCPT-160-C2-05
16F4OMXS	OSPP250000101400010000000	BAE-BK50NBR	SCPT-400-02-02
16F4OMXSS	OSPP250000101800001000000	BAK08SCF	SCPT-400-02-02-PQC
16F4OMXSV	OSPP250000101800001000000	BAK10LCF	SCPT-400-02-02-ST
16F5OMLOS	OSPP250000102220000000000	BAK12SCF	SCPT-400-02-02-USA
16F5OMLOSS	OSPP250000102220000000000	BAK16SCF	SCPT-400-02-02-WEB
16F5OMXS	OSPP250001000060000000000	BAK20SCF	SCPT-400-C2-05
16F5OMXSS	OSPP250001000060000000000	BAK22LCF	SCPT-400-C2-05-PQC
16F5OMXSV	OSPP250001000080000300000	BAK25SCF	SCPT-600-02-02
16F63MXS	OSPP250001000080000300000	BAK28LCF	SCPT-600-02-02-PQC
16F63P4S	OSPP250001000100000300000	BAK30SCF	SCPT-600-02-02-ST
16F642EDMLS	OSPP250001000100000300000	BAK38SCF	SCPT-600-02-02-USA
16F642EDMLSS	OSPP250001000125000000000	BAK42LCF	SCPT-600-02-02-WEB
16F642EDMXS	OSPP250001000125000000000	BAM08SCFX	SCPT-600-02-02-WG
16F642EDMXSS	OSPP250001000140000D00000	BAM12LCFX	SCPT-600-C2-05
16F64OMXS	OSPP250001000140000D00000	BAM12SCFX	SCPT-600-C2-05-PQC
16F65OMXS	OSPP250001000150000000000	BAM16SCFX	SCQ-060-0-02
16F6MXSS	OSPP250001000150000000000	BAM22L/20SCFX	SCQ-060-10-07
16F70-12-10-1P	OSPP250001000150000300000	BAM25SCFX	SCQ-150-0-02
16F70-12-12-1P	OSPP250001000150000300000	BAM30SCFX	SCQ-150-10-07
16F70-12-8-1P	OSPP250001000165000000000	BAM38SCFX	SCQ-8861

16F70-16-12	OSPP250001000165000000000	BAM42LCFX	SCREFL0W1
16F70-16-16-1P	OSPP250001000170000000000	BAS08S71	SCREFL0W2
16F70-20-16-1P	OSPP250001000170000000000	BAS10S71	SCREFL0W3
16F70-8-10-1P	OSPP250001000195000E00000	BAS12S71	SCREFL0W4
16F70-8-12-1P	OSPP250001000195000E00000	BAS14S71	SCREFL0W5
16F70-8-8-1P	OSPP250001000200000200000	BAS16S71	SCREFL0W7
16F71-12-12-1P	OSPP250001000200000200000	BAS20S71	SCREFL0W8
16F71-16-12	OSPP250001000200000300000	BAS25S71	SCREKAL150/152
16F71-16-16-1P	OSPP250001000200000300000	BAS30S71	SCREKALSCE100
16F71-20-20	OSPP250001000220000000000	BAS38S71	SCREKALSCFT
16F71-24-20-1P	OSPP250001000220000000000	BAV06/1201X	SCREKALSCFT-DRV
16F71-24-24	OSPP250001000230000000000	BAV06/1203X	SCREKALSCJN
16F71-8-8-1P	OSPP250001000230000000000	BAV06/1205X	SCREKALSCM
16F73-12-12-1P	OSPP250001000250000000000	BAV06/1206X	SCREKALSCP
16F73-12-16-1P	OSPP250001000250000000000	BAV06/1207X	SCREKALSCPT
16F73-16-12-1P	OSPP250001000250000300000	BAV06/1208X	SCREKALSCQ
16F73-16-16	OSPP250001000250000300000	BAV06/1209X	SCREKALSCRPM
16F73-20-16-1P	OSPP250001000250000600000	BAV06/1210X	SCREKALSCT
16F73-20-20-1P	OSPP250001000250000600000	BAV06/1211X	SCREKALSCVF
16F73-24-20	OSPP250001000280000000000	BAV06/1220KPLX	SCREMA01
16F73-32-32-1P	OSPP250001000280000000000	BAV06/1221X	SCREME01
16F73-8-12-1P	OSPP250001000280000000F000	BAV06/1222X	SCREME02
16F77-12-10	OSPP250001000280000000F000	BAV06/1223X	SCREME03
16F77-12-12	OSPP250001000280000E00000	BAV06/1224X	SCREME04
16F77-12-8	OSPP250001000280000E00000	BAV06/12KPLX	SCREME05
16F77-16-12	OSPP250001000280100E00000	BB1	SCREME06
16F77-16-16	OSPP250001000280100E00000	BB3-01-FK00	SCREME07
16F77-16-20	OSPP250001000290000000000	BB3-01-FK00	SCREME08
16F77-20-16	OSPP250001000290000000000	BB3-02-DK00	SCREME10
16F77-20-20	OSPP250001000300000000000	BB3-02-DK00	SCREME11
16F77-24-20	OSPP250001000300000000000	BB3-02-FK00	SCREME12
16F77-8-8	OSPP250001000300000000F000	BB3-02-FK00	SCREME13
16F78-12-12-1P	OSPP250001000300000000F000	BB3-02-FL00	SCREME14
16F78-16-12-1P	OSPP250001000300000400000	BB3-02-FL00	SCREME15
16F78-16-16	OSPP250001000300000400000	BB3-C1-FK00	SCREME17
16F78-16-20-1P	OSPP250001000300000F00000	BB3-C1-FK00	SCREME18
16F78-20-16-1P	OSPP250001000300000F00000	BB3-C1-FL00	SCREME19
16F78-20-20-1P	OSPP250001000300001002000	BB3-C1-FL00	SCREME20
16F78-24-24	OSPP250001000300001002000	BB3-C1-RK00	SCREME21
16F79-12-12	OSPP250001000320000000000	BB3-C1-RK00	SCREME22
16F79-12-16	OSPP250001000320000000000	BB3-C2-DK00	SCREME23
16F79-16-16	OSPP250001000330000000000	BB3-C2-DK00	SCREME24
16F79-16-20	OSPP250001000330000000000	BB3-C2-FK00	SCREME25
16F79-20-16	OSPP250001000330000300000	BB3-C2-FK00	SCREPR1
16F79-20-20	OSPP250001000330000300000	BB3-C2-FL00	SCRESCK01
16F79-24-20	OSPP250001000350000000000	BB3-C2-FL00	SCRESCK03
16F79-24-24	OSPP250001000350000000000	BB3-C2-FR00	SCRESE01
16FA12N-316	OSPP250001000360000000000	BB3-C2-FR00	SCRESE02
16FA12N-M	OSPP250001000360000000000	BB3-C2-FS00	SCRESM01
16FA16N-316	OSPP250001000370000000000	BB3-C2-FS00	SCRESO01
16FA16N-M	OSPP250001000370000000000	BBB/T	SCRESO02
16FBT12N-316	OSPP250001000400000000000	BBRAB10	SCRESO03
16FBT12N-MMX	OSPP250001000400000000000	BBRAB12	SCRESO04

16FBT16N-316	OSPP250001000400000000X	BBRAB6	SCRESO05
16F-C16L-1/3-B	OSPP250001000400000000X	BBRAB8	SCRESO09
16F-C16L-1/3-BN-B	OSPP250001000400000200000	BC465938U200	SCRESO10
16F-C16L-1/3-BN-SS	OSPP250001000400000200000	BC6MH	SCRESO16
16F-C16L-1/3-SS	OSPP250001000400001002000	BCD6-CAN	SCRESO17
16F-C16L-100-SS	OSPP250001000400001002000	BCD6-CAN-VZ000	SCRESO18
16F-C16L-10-B	OSPP250001000420000000000	BCD-LED6-CAN	SCRESO19
16F-C16L-10-SS	OSPP250001000420000000000	BCM10-316	SCRESO21
16F-C16L-1-B	OSPP250001000445000E00000	BCM10-6MO	SCRESZ01
16F-C16L-1-B-C3	OSPP250001000445000E00000	BCM10-B	SCRPM-220
16F-C16L-1-BN-SS	OSPP250001000450000000000	BCM10-IIY	SCRPM-220-ST
16F-C16L-1-EPR-SS	OSPP250001000450000000000	BCM10-M	SCRPM-220-WEB
16F-C16L-1-SS	OSPP250001000460001000000	BCM10-NNR	SCRPMA-001
16F-C16L-25-BN-SS	OSPP250001000460001000000	BCM10-TTZ	SCRPMA-001-ST
16F-C16L-25-SS	OSPP250001000475000000000	BCM12-316	SCRPMA-001-WEB
16F-C16L-50-B	OSPP250001000475000000000	BCM12-6MO	SCRPMA-002
16F-C16L-50-BN-SS	OSPP250001000500000000000	BCM12-6MO-NC	SCRPMA-002-ST
16F-C16L-50-SS	OSPP250001000500000000000	BCM12-825	SCRPMA-002-WEB
16F-C16L-5-B	OSPP250001000500000200000	BCM12-B	SCRPMA-010
16F-C16L-5-BN-SS	OSPP250001000500000200000	BCM12-IIY	SCRPMA-9098
16F-C16L-5-SS	OSPP250001000510000000000	BCM12-IIY-NC	SCRPM-STATIV
16F-C16L-75-BN-SS	OSPP250001000510000000000	BCM12-M	SCSD-PRG01
16FCS2SK	OSPP250001000560000200000	BCM12-NNR	SCSD-PRG-KIT
16FEL12N-316	OSPP250001000560000200000	BCM12-TTZ	SCSD-S27
16FEL12N-MMX	OSPP250001000600000000000	BCM14-316	SCSN-410
16FEL16N-316	OSPP250001000600000000000	BCM15-316	SCSN-450
16FF16-316	OSPP250001000650000600000	BCM16-316	SCSN-450-PSD
16FF16-6MO	OSPP250001000650000600000	BCM16-6MO	SCSN-450-WEB
16F-F16L-100-EPR-SS	OSPP250001000690000000000	BCM16-MMX	SCSN-460
16F-F16L-100-SS	OSPP250001000690000000000	BCM18-316	SCSW-KIT-152
16F-F16L-10-EPR-SS	OSPP250001000710000000000	BCM18-6MO	SCSW-KIT-152-ST
16F-F16L-10-SS	OSPP250001000710000000000	BCM18-TTZ	SCT-150-0-02
16F-F16L-1-SS	OSPP250001000785000000000	BCM20-316	SCT-150-0-02-ST
16F-F16L-250-EPR-SS	OSPP250001000785000000000	BCM20-6MO	SCT-150-0-02-WG
16F-F16L-50-BN-SS	OSPP250001000785000000F000	BCM25-316	SCT-150-04-02
16F-F16L-50-SS	OSPP250001000785000000F000	BCM25-6MO	SCT-150-04-02-ST
16F-F16L-5-SS	OSPP250001000800000000000	BCM25-TTZ	SCT-150-04-02-WEB
16FF5OMLOS	OSPP250001000800000000000	BCM3-316	SCT-150-14-07
16FMK4S	OSPP250001000800100000000	BCM3-B	SCT-150-41-07
16FMK4SS	OSPP250001000800100000000	BCM4-316	SCT-400-K-01
16F-MPNLB-T-SS	OSPP250001000800101000000	BCM6-316	SCTA-400-02
16FMTXB	OSPP250001000800101000000	BCM6-6MO	SCTSD-150-00-06
16FMTXS	OSPP250001000988000000000	BCM6-6MO-NC	SCTSD-150-00-07
16FMTXSS	OSPP250001000988000000000	BCM6-B	SCTSD-150-02-07
16FNMK4S	OSPP250001001000000000000	BCM6-IIY	SCTSD-150-10-05
16FNMK4SS	OSPP250001001000000000000	BCM6-M	SCTSD-150-10-07
16FNMLS	OSPP250001001000000400000	BCM6-NNR	SCTSD-150-12-05
16FNMLSS	OSPP250001001000000400000	BCM6-NNR-NC	SCTSD-150-12-07
16FNMTXS	OSPP250001001000001000000	BCM6-TTZ	SCTSD-L 9048
16FNMTXSBP	OSPP250001001000001000000	BCM8-316	SCTSD-L-160FO-200FO-17
16FNMTXSS	OSPP250001001080000D00000	BCM8-6MO	SCTSD-L-190FS-220FO-17
16FRT12N-316	OSPP250001001080000D00000	BCM8-B	SCTT-10-100-07
16FRT16N-316	OSPP250001001100000000000	BCM8-IIY	SCTT-10-150-07

16FS5C2464ACHGC15	OSPP250001001100000000000	BCM8-M	SCTT-10-250-07
16FS5C2464ACHGC15	OSPP250001001120000000000	BD03-ABN-A	SCTT-20-010-07
16FS6-32-32	OSPP250001001120000000000	BD03-ABN-S	SCV1700
16FSC12N-316	OSPP250001001193000B00000	BD03-ABT-A	SCV1701
16FSC16GC-316	OSPP250001001193000B00000	BD03-ABT-S	SCV1702
16FSC16N-316	OSPP250001001200000000000	BD03-ABX-A	SCV1703
16FSC16N-MMX	OSPP250001001200000000000	BD03-ABX-S	SCVF-002-10-07
16FSC8N-316	OSPP250001001210000000000	BD03-ADB-A	SCVF-004-10-07
16F-SWB16L-RT-V-SS	OSPP250001001210000000000	BD03-BDA-A	SCVF-004-20-07-CAT
16F-U16LB-G-SS	OSPP250001001220000300000	BD03-DDX-A	SCVF-015-00-02
16F-U16LB-G-SS-HT	OSPP250001001220000300000	BD03-DDX-S	SCVF-015-10-07
16F-U16LB-T-SS	OSPP250001001250000E00000	BD03-DDX-VA	SCVF-040-10-07
16F-U16LR-G-SS	OSPP250001001250000E00000	BD03-PN-A	SCVF-060-00-02
16F-U16LR-T-SS	OSPP250001001300001000000	BD03-PNR-A	SCVF-060-10-07
16G3P4S	OSPP250001001300001000000	BD03-PNR-S	SCVF-080-10-07
16G4MXS	OSPP250001001350001000000	BD03-PNS-A	SCVF-150-00-02
16G4MXSS	OSPP250001001350001000000	BD03-PT-S	SCVF-150-00-02-ST
16G63P4S	OSPP250001001350002000000	BD049120	SCVF-150-10-07
16GMTXB	OSPP250001001350002000000	BD055013U101	SCVF-300-00-02
16GMTXSS	OSPP250001001380000000000	BD055014U101	SCVF-300-10-07
16H6MK4S	OSPP250001001380000000000	BD055015U101	SCVF-600-00-02-SKY
16H6MK4SS	OSPP250001001500000E0F000	BD055017	SCVFA-02
16HMK4S	OSPP250001001500000E0F000	BD057484	SD06LCF
16HMK4SS	OSPP250001001550000200000	BD15AAANB2,5	SD06SCF
16HMLOS	OSPP250001001550000200000	BD15NALND15X6173	SD12
16HMLOSS	OSPP250001002000000000000	BD25	SD400A06V
16HMTXB	OSPP250001002000000000000	BD388324	SD400AR1/4V
16HMTXS	OSPP250001002005000200000	BD389471U001	SD400B06V
16HMTXSBP	OSPP250001002005000200000	BD389513U002	SD400C06V
16HMTXSS	OSPP250001002070000000000	BD389569U107	SD500A06N
16HMX6SS	OSPP250001002070000000000	BD389571U007	SD500A06V
16HP46S	OSPP250001002200000600000	BD389576	SD500B06N
16HP4S	OSPP250001002200000600000	BD464753	SD500B06V
16J6MK4S	OSPP250001004800000000000	BD465251U002	SD500C06V
16JMK4S	OSPP250001004800000000000	BD465252U002	SD-50B-24
16JMLOS	OSPP250001100121000000000	BD465318U002	SDC25-4
16JMLOSS	OSPP250001100121000000000	BD465319U002	SD-M12X1X
16JMTXS	OSPP250001100200000000000	BD465320U002	SDM2PP06SVG
16JMTXSBP	OSPP250001100200000000000	BD465592U002	SDM2PP16SVG
16JMTXSS	OSPP250001101070000E00000	BD467421U002	SDM2PP21SVG
16K-16 RA-SS	OSPP250001101070000E00000	BD467422U002	SDM2PP21SVGX988
16L5NMLS	OSPP250004000250001004000	BD467423U002	SDM2PP21SVGX990
16LEMQ1CF	OSPP250004000250001004000	BD467438U002	SDS120/1.5Z1
16LEMQ1SS	OSPP250004000325001004000	BD467732U002	SDS120/1.5Z2
16LEMQ2SS	OSPP250004000325001004000	BD467791U002	SDS120/2.5S1-03
16LOEMQ1CF	OSPP250004000350000204000	BD467792U002	SDS60/0.5D1-03
16LOEMQ2CF	OSPP250004000350000204000	BD469084U007	SDS60/1D1-02
16M1SC12-316	OSPP250004000450000204000	BD470109U002	SDS60/1Z1-02
16M1SC16-316	OSPP250004000450000204000	BD470109U072	SDS60/2.5Z1-02
16M22F8OMXS	OSPP250004000508000B0X000	BD470110U002	SDS60/3Z1-02
16M26C8OMLOSV	OSPP250004000508000B0X000	BD470110U007	SE.1222
16M26F82EDMXS	OSPP250004000800000404000	BD470111U072	SE.75112110
16M26F8OMXS	OSPP250004000800000404000	BD470234U002	SE.75221210

16M27C87OMXS	OSPP250004001050000004000	BD470335	SE.75222110
16M27F82EDMXS	OSPP250004001050000004000	BDM01/01	SE.75222111
16M27F87OMLOS	OSPP250004001050000204000	BE059104U001	SE.75231220
16M27F87OMXS	OSPP250004001050000204000	BE467498	SE.75232210
16M27F87OMXSS	OSPP250004001350000404000	BE468004U202	SE.75232211
16M27F8OMXS	OSPP250004001350000404000	BE468005U102	SE.75351340G
16M2SC16-316	OSPP250010000100000000000	BF16SX	SE.75352211
16M33C87OMLOS	OSPP250010000100000000000	BF20SSX	SE.75352310
16M33C87OMLOSV	OSPP250010000100000200000	BF20SX	SE.75352311
16M33C87OMXS	OSPP250010000100000200000	BF24-500SX	SE.75361310
16M33C8OMLOS	OSPP250010000100000K00000	BF24SSX	SE.75362410
16M33C8OMXS	OSPP250010000100000K00000	BF24SX	SE.75362411
16M33F682EDMLS	OSPP250010000100001000000	BF2EO206X2S	SE13137
16M33F682EDMXS	OSPP250010000100001000000	BF32SSX	SE13138
16M33F687OMLS	OSPP250010000130000000000	BF32SX	SE13165
16M33F82EDMLOS	OSPP250010000130000000000	BF37-115/140	SE20031
16M33F82EDMLOSS	OSPP250010000150000000000	BF37-115/140G	SE26A
16M33F82EDMLOSV	OSPP250010000150000000000	BF37-38/60	SE26K
16M33F82EDMXS	OSPP250010000200000E00000	BF37-38/60G	SE31SCABBVA15S0022
16M33F87OMLOS	OSPP250010000200000E00000	BF37-6/42	SE60SAABBNA60F
16M33F87OMXS	OSPP250010000200000E03000	BF37-60/75	SE60SAALBNA60
16M33F87OMXSV	OSPP250010000200000E03000	BF37-60/75G	SE60SAAMAVA45S0014
16M33F8OMXS	OSPP250010000230000000000	BF37-75/90	SE75111110
16M33R87OMLOS	OSPP250010000230000000000	BF37-75/90G	SE75111111
16M33RHV82EDMXSCF	OSPP250010000250000000000	BF37-90PREFLARE	SE75221110
16M33RHZ82EDMXSCF	OSPP250010000250000000000	BF3BOXINSERT	SE75221111
16M33V87OMLOS	OSPP250010000250000800000	BF3DIN7155010X1.5S	SE75231210
16M33V87OMXS	OSPP250010000250000800000	BF3DIN7155012X1.5S	SE75231211
16M5RT16-316	OSPP250010000270000E03000	BF3DIN7155012X1.5SS	SE75351210
16M5SEL16-316	OSPP250010000270000E03000	BF3DIN7155015X2S	SE75351211
16M5VEL16-316	OSPP250010000300000000000	BF3DIN7155018X1.5S	SE75351310
16MA12N-316	OSPP250010000300000000000	BF3DIN7155020X2,5S	SE75351311
16MA12N-6MO	OSPP250010000340000000000	BF3DIN7155022X1.5S	SE75361410
16MA16N-316	OSPP250010000340000000000	BF3DIN7155022X1.5SS	SE75361411
16MA16R-316	OSPP250010000340006000000	BF3DIN7155025X2SS	SE75461210
16MA8N-316	OSPP250010000340006000000	BF3DIN7155028X1.5S	SE75461211
16MBC16N-316	OSPP250010000345000000000	BF3DIN7155028X1.5SS	SE75471310
16MBT16N-316	OSPP250010000345000000000	BF3DIN7155028X2SS	SE75471311
16M-C16L-1/3-SS	OSPP250010000425000000000	BF3DIN7155030X1.5SS	SE75481410
16M-C16L-1-BN-SS	OSPP250010000425000000000	BF3DIN7155032X1.5S	SE75481411
16M-C16L-1-SS	OSPP250010000500000000000	BF3DIN7155035X2SS	SER.MISC.048
16M-C16L-50-SS	OSPP250010000500000000000	BF3EO206X1.5S	SER.MISC.049
16M-C16L-5-BN-B	OSPP250010000500000E00000	BF3EO206X1.5SG	SER.MISC.060
16M-C16L-5-SS	OSPP250010000500000E00000	BF3EO206X1.5SS	SER.MISC.067
16MSC12K-316	OSPP250010000500000E03000	BF3EO206X1.5SSG	SERA001008
16MSC12N-316	OSPP250010000500000E03000	BF3EO206X1S	SERVOSTAR601-I/O-14/08
16MSC12N-6MO	OSPP250010000500010000000	BF3EO206X1SG	SERVOSTAR601-I/O-14/08
16MSC12N-MMX	OSPP250010000500010000000	BF3EO206X1SS	SERVOSTAR601-PROFIBUS
16MSC12N-NNR	OSPP250010000550000000000	BF3EO206X1SSG	SERVOSTAR601-PROFIBUS
16MSC12R-316	OSPP250010000550000000000	BF3EO206X2S	SERVOSTAR601-STANDARD
16MSC16BR-316	OSPP250010000650000000000	BF3EO208X1.5S	SERVOSTAR601-STANDARD
16MSC16K-316	OSPP250010000650000000000	BF3EO208X1.5SG	SERVOSTAR603-I/O-14/08
16MSC16N-316	OSPP250010000700000000000	BF3EO208X1.5SS	SERVOSTAR603-I/O-14/08

16MSC16N-6MO	OSPP250010000700000000000	BF3EO208X1.5SSG	SERVOSTAR603-PROFIBUS
16MSC16N-MMX	OSPP250010000800000000000	BF3EO208X1S	SERVOSTAR603-PROFIBUS
16MSC16N-NNR	OSPP250010000800000000000	BF3EO208X1SG	SERVOSTAR603-STANDARD
16MSC16N-TTZ	OSPP250010000815000000000	BF3EO208X1SL10	SERVOSTAR603-STANDARD
16MSC16R-316	OSPP250010000815000000000	BF3EO208X1SS	SERVOSTAR606-I/O-14/08
16MSC16R-B	OSPP250010000850000000000	BF3EO208X1SSG	SERVOSTAR606-I/O-14/08
16MSC16RED-316	OSPP250010000850000000000	BF3EO208X2.5S	SERVOSTAR606-PROFIBUS
16MSC16R-MMX	OSPP250010000900000000000	BF3EO208X2S	SERVOSTAR606-PROFIBUS
16MSC16R-TTZ	OSPP250010000900000000000	BF3EO208X2SG	SERVOSTAR606-STANDARD
16MSC8N-316	OSPP250010000900000600000	BF3EO210LX1.5S	SERVOSTAR606-STANDARD
16MSC8N-6MO	OSPP250010000900000600000	BF3EO210LX1.5SG	SERVOSTAR610-I/O-14/08
16MSC8N-MMX	OSPP250010000920000000000	BF3EO210LX1.5SS	SERVOSTAR610-I/O-14/08
16MSC8R-316	OSPP250010000920000000000	BF3EO210LX1.5SSG	SERVOSTAR610-PROFIBUS
16MSEL12N-316	OSPP250010000988000000000	BF3EO210LX1S	SERVOSTAR610-PROFIBUS
16MSEL12N-MMX	OSPP250010000988000000000	BF3EO210LX1SG	SERVOSTAR610-STANDARD
16MSEL16K-316	OSPP250010001000000000000	BF3EO210LX1SS	SERVOSTAR610-STANDARD
16MSEL16N-316	OSPP250010001000000000000	BF3EO210LX1SSG	SERVOVENTILAZIONEMBSV105
16MSEL16N-6MO	OSPP250010001000000E00000	BF3EO210LX2S	SERVOVENTILAZIONEMBSV145
16MSEL16N-MMX	OSPP250010001000000E00000	BF3EO210LX2SS	SERVOVENTILAZIONEMBSV205
16MSEL16N-TTZ	OSPP250010001000100E00000	BF3EO210SX1.5S	SF 02024
16MSEL16R-316	OSPP250010001000100E00000	BF3EO210SX1.5SG	SF1596
16MTC16N-316	OSPP250010001118000000000	BF3EO210SX1.5SS	SF1-C2-SYV0
16MVEL16N-316	OSPP250010001118000000000	BF3EO210SX2S	SF1-C2-SYV0
16N43-12-12-1P	OSPP250010001220000000000	BF3EO210SX2SG	SF1-C2-TYV0
16N46-12-10	OSPP250010001220000000000	BF3EO210SX2SS	SF1-C2-TYV0
16N46-12-12	OSPP250010001460000000000	BF3EO210SX3S	SF2-04-SHV0
16N46-12-16	OSPP250010001460000000000	BF3EO212LX1.5S	SF2-04-SHV0
16N46-16-12	OSPP250010001660000000000	BF3EO212LX1.5SG	SF2-04-SXV0
16N46-16-16	OSPP250010001660000000000	BF3EO212LX1.5SS	SF2-04-SXV0
16N46-20-20	OSPP250010001700000000000	BF3EO212LX1.5SSG	SF-2218
16N46-8-12	OSPP250010001700000000000	BF3EO212LX2S	SF2-C4-FLV0
16N48-12-12	OSPP250010100150000000000	BF3EO212LX2SS	SF2-C4-FLV0
16N48-12-16	OSPP250010100150000000000	BF3EO212LX2SSG	SF2-C4-SXV0
16N48-16-12	OSPP250010100320000000000	BF3EO212SX1.5S	SF2-C4-SXV0
16N48-16-16	OSPP250010100320000000000	BF3EO212SX1.5SG	SF2-C4-SYV0
16N48-20-20	OSPP250010100350000400000	BF3EO212SX1.5SS	SF2-C4-SYV0
16N48-24-24	OSPP250010100350000400000	BF3EO212SX1.5SSG	SFCE-6003-S30-M
16N48-32-32	OSPP250010100500000000000	BF3EO212SX2.5S	SFN20
16N48-8-12	OSPP250010100500000000000	BF3EO212SX2S	SFN60-316
16N70-12-10-1P	OSPP250010100590000000000	BF3EO212SX2SG	SG-060
16N70-12-12-1P	OSPP250010100590000000000	BF3EO212SX2SS	SG-066
16N70-12-12C-1P	OSPP250010100610000000000	BF3EO212SX3S	SG-072
16N70-12-12SL130	OSPP250010100610000000000	BF3EO212SX3SG	SG-084
16N70-12-16-1P	OSPP250010100620000000000	BF3EO215X1.5S	SG-097
16N70-12-8-1P	OSPP250010100620000000000	BF3EO215X1.5SS	SG-106
16N70-16-10	OSPP250010100700000000000	BF3EO215X1.5SSG	SG-113
16N70-16-12-1P	OSPP250010100700000000000	BF3EO215X1S	SG-122
16N70-16-16-1P	OSPP250010100700000400000	BF3EO215X2S	SG-131
16N70-16-16C-1P	OSPP250010100700000400000	BF3EO215X2SG	SG-155
16N70-16-16SL85	OSPP250010100800000000000	BF3EO215X2SS	SG-166
16N70-20-16-1P	OSPP250010100800000000000	BF3EO216X1.5SS	SG-182
16N70-8-12-1P	OSPP250010100875100E01000	BF3EO216X2.5S	SG-209
16N70-8-8-1P	OSPP250010100875100E01000	BF3EO216X2.5SG	SG-220

16N71-12-12-1P	OSPP250010100930000000000	BF3EO216X2.5SS	SG-232
16N71-16-12-1P	OSPP250010100930000000000	BF3EO216X2S	SG-270
16N71-16-16	OSPP250010100950000000000	BF3EO216X2SG	SG-292
16N71-20-16	OSPP250010100950000000000	BF3EO216X2SS	SGB8M8F
16N71-20-20-1P	OSPP250010101000000000000	BF3EO216X2SSG	SGB8M8F3
16N71-24-24	OSPP250010101000000000000	BF3EO216X3S	SGB8M8FHP
16N71-32-32	OSPP250010101100000000000	BF3EO216X3SG	SGB8M8M
16N73-12-12	OSPP250010101100000000000	BF3EO216X3SS	SGB8M8M3
16N73-12-12SL100	OSPP250010101450000000000	BF3EO218X1.5S	SGB8M8RF
16N73-12-16-1P	OSPP250010101450000000000	BF3EO218X1.5SG	SGB8MM20X1.5F
16N73-16-12-1P	OSPP250010102000006000000	BF3EO218X1.5SS	SGB8RM8F
16N73-16-16-1P	OSPP250010102000006000000	BF3EO218X1.5SSG	SGPWPU10X2/12-100
16N73-16-16-1P-SL100	OSPP250012000160006000000	BF3EO218X2.5S	SGPWPU10X2/2-100
16N73-16-16-1P-SL116	OSPP250012000160006000000	BF3EO218X2S	SGPWPU10X2/3-100
16N73-16-16SL150	OSPP250012000160706000000	BF3EO218X2SG	SGPWPU10X2/4-100
16N73-16-20-1P	OSPP250012000160706000000	BF3EO218X2SS	SGPWPU10X2/5-100
16N73-20-12-1P	OSPP250012101250000000000	BF3EO218X2SSG	SGPWPU12X2/2-100
16N73-20-16	OSPP250012101250000000000	BF3EO220X2.5S	SGPWPU12X2/3-100
16N73-20-20	OSPP250100000185000000000	BF3EO220X2.5SG	SGPWPU12X2/4-100
16N73-20-20-SL100	OSPP250100000185000000000	BF3EO220X2.5SS	SGPWPU12X2/5-100
16N73-20-20SL145	OSPP250100000190000000000	BF3EO220X2.5SSG	SGPWPU14X2/2-100
16N73-24-20	OSPP250100000190000000000	BF3EO220X2S	SGPWPU14X2/3-100
16N73-24-24	OSPP250100000190001000000	BF3EO220X2SG	SGPWPU14X2/4-100
16N73-32-32-1P	OSPP250100000190001000000	BF3EO220X2SS	SGPWPU14X2/5-100
16N73-8-12-1P	OSPP250100000320000000000	BF3EO220X2SSG	SGPWPU16X2.5/5-100
16N77-12-10	OSPP250100000320000000000	BF3EO220X3.5S	SGPWPU4X1/2-100
16N77-12-12	OSPP250100000370000000000	BF3EO220X3S	SGPWPU4X1/3-100
16N77-12-8	OSPP250100000370000000000	BF3EO220X3SG	SGPWPU4X1/4-100
16N77-16-10	OSPP250100000410000000000	BF3EO220X3SS	SGPWPU4X1/5-100
16N77-16-12	OSPP250100000410000000000	BF3EO222X1.5S	SGPWPU6X1.5/2-100
16N77-16-16	OSPP250100000410000000F000	BF3EO222X1.5SG	SGPWPU6X1.5/3-100
16N77-16-20	OSPP250100000410000000F000	BF3EO222X1.5SS	SGPWPU6X1.5/4-100
16N77-20-16	OSPP250100000410000200000	BF3EO222X2.5S	SGPWPU6X1.5/5-100
16N77-20-20	OSPP250100000410000200000	BF3EO222X2S	SGPWPU6X1/2-100
16N77-24-20	OSPP250100000410000020F000	BF3EO222X2SG	SGPWPU6X1/3-100
16N77-8-8	OSPP250100000410000020F000	BF3EO222X2SS	SGPWPU6X1/4-100
16N78-12-12	OSPP250100000410000600000	BF3EO222X2SSG	SGPWPU6X1/5-100
16N78-12-16-1P	OSPP250100000410000600000	BF3EO225X2.5S	SGPWPU8X1.5/2-100
16N78-16-12-1P	OSPP250100000450000000000	BF3EO225X2.5SS	SGPWPU8X1.5/3-100
16N78-16-16	OSPP250100000450000000000	BF3EO225X2.5SSG	SGPWPU8X1.5/4-100
16N78-16-20-1P	OSPP250100000475000000000	BF3EO225X2S	SGPWPU8X1.5/5-100
16N78-20-16	OSPP250100000475000000000	BF3EO225X2SG	SGPWPU8X2/2-100
16N78-20-20	OSPP250100000495003000000	BF3EO225X2SS	SGPWPU8X2/3-100
16N78-20-20-1P-SL120	OSPP250100000495003000000	BF3EO225X3S	SGPWPU8X2/4-100
16N78-20-24	OSPP250100000500000000000	BF3EO225X3SG	SGPWPU8X2/5-100
16N78-24-20	OSPP250100000500000000000	BF3EO225X3SS	SGS-110-130/W5
16N78-24-24	OSPP250100000500000200000	BF3EO225X3SSG	SGS-140-160/W5
16N78-24-24-1P-SL140	OSPP250100000500000200000	BF3EO225X4S	SGXDV06XMXX
16N78-32-24-1P	OSPP250100000521000000000	BF3EO225X4SG	SGXDV08XMXX
16N79-12-12	OSPP250100000521000000000	BF3EO228X2.5S	SGXDV10XKXX
16N79-12-16	OSPP250100000525000000000	BF3EO228X2.5SS	SGXDV12XKXX
16N79-16-12	OSPP250100000525000000000	BF3EO228X2S	SGXDV12XKXX
16N79-16-16	OSPP250100000530001000000	BF3EO228X2SG	SGXDV16XMXX

16N79-16-20	OSPP250100000530001000000	BF3EO228X2SS	SH1-62
16N79-20-16	OSPP250100000560000000000	BF3EO228X2SSG	SH1-63
16N79-20-20	OSPP250100000560000000000	BF3EO228X3S	SH20D-K
16N79-24-20	OSPP250100000600000000000	BF3EO228X4S	SH20D-K
16N79-24-24	OSPP250100000600000000000	BF3EO230X3S	SH20SE-K
16NNX-16-16	OSPP250100000600001000000	BF3EO230X3SG	SH20SE-K
16NS6-32-32	OSPP250100000600001000000	BF3EO230X3SS	SH2-62
16NU16-316	OSPP250100000650000000000	BF3EO230X3SSG	SH2-62-BSPP
16NU16-6MO	OSPP250100000650000000000	BF3EO230X4S	SH2-62Y
16P1-107041011	OSPP250100000660003000000	BF3EO230X4SG	SH2-63
16P1-107042011	OSPP250100000660003000000	BF3EO230X4SS	SH2-63-BSPP
16P1-107052011	OSPP250100000700000000000	BF3EO230X4SSG	SH2-63Y
16P1-108042011	OSPP250100000700000000000	BF3EO230X5S	SH3-62
16P2-107042011	OSPP250100000700010000000	BF3EO230X5SG	SH3-62-BSPP
16P2-107052011	OSPP250100000700010000000	BF3EO235X2S	SH3-63
16P2-108052011	OSPP250100000740000000000	BF3EO235X2SG	SH3-63-BSPP
16PAT16	OSPP250100000740000000000	BF3EO235X2SS	SH4-62
16PC16-316	OSPP250100000745000000000	BF3EO235X2SSG	SH4-62-BSPP
16PFMQ1CF	OSPP250100000745000000000	BF3EO235X3S	SH4-63
16PFMQ2CF	OSPP250100000745010000000	BF3EO235X3SG	SH4-63-BSPP
16PMQ1CF	OSPP250100000745010000000	BF3EO235X3SS	SH5S-D
16PMQ2CF	OSPP250100000750000000000	BF3EO235X3SSG	SH5S-D
16PNMK4S	OSPP250100000750000000000	BF3EO238X2.5SS	SH6-62
16PNMK4SS	OSPP250100000080000000F000	BF3EO238X3S	SH6-62-BSPP
16PNMLOS	OSPP250100000080000000F000	BF3EO238X3SG	SH6-63
16PNMLOSS	OSPP250100000815000000000	BF3EO238X3SS	SH6-63-BSPP
16PNMTXS	OSPP250100000815000000000	BF3EO238X3SSG	SH71-3C12-12F
16PNMTXSS	OSPP250100000820000000000	BF3EO238X4S	SH71-3C12-12FV
16R-16 RA-SS	OSPP250100000820000000000	BF3EO238X4SG	SH71-3C16-16EF
16R4OMLOS	OSPP250100000820001000000	BF3EO238X4SS	SH71-3C16-16F
16R4OMXS	OSPP250100000820001000000	BF3EO238X4SSG	SH71-3C16-20F
16R4OMXSS	OSPP250100000900000E00000	BF3EO238X5S	SH71-3C4-4F
16R5OMLOS	OSPP250100000900000E00000	BF3EO238X5SG	SH71-3C4-4FV
16R6MK4S	OSPP250100000950000000000	BF3EO238X5SS	SH71-3C6-4F
16R6MLOS	OSPP250100000950000000000	BF3EO238X6+7S	SH71-3C6-6EFSL
16R6MLOSS	OSPP250100000988000000000	BF3EO238X6+7SG	SH71-3C6-6F
16R6MXS	OSPP250100000988000000000	BF3EO242X2S	SH71-3C6-6FV
16RHDMLOSCF	OSPP250100001000000000000	BF3EO242X2SG	SH71-3C6-8F
16RHDMTXS0.5BCF	OSPP250100001000000000000	BF3EO242X2SS	SH71-3C8-8EF
16RHDMTXS4BCF	OSPP250100001100000000000	BF3EO242X3S	SH71-3C8-8F
16RHDMTXSCF	OSPP250100001100000000000	BF3EO242X3SG	SH71-3C8-8FSL
16RHV42EDMXSCF	OSPP250100001110000000000	BF3EO242X3SS	SH71-3C8-8FV
16RHV5OMLOSCF	OSPP250100001110000000000	BF3EO242X3SSG	SH71-3N12-12RP
16RHV5OMXSCF	OSPP250100001188000000000	BF3EO242X4S	SH71-3N16-16EF
16RHZ42EDMLOSCF	OSPP250100001188000000000	BF3EOM21.3X3.2S	SH71-3N16-16F
16RHZ42EDMXSCF	OSPP250100001300000000000	BF3EOM26.9X3.2S	SH71-3N16-16FV
16RU12-316	OSPP250100001300000000000	BF3EOM33.7X3.2S	SH71-3N4-4F
16RU12-6MO	OSPP250100001680000000000	BF3P312X1.5	SH71-3N4-4FV
16RU4-316	OSPP250100001680000000000	BF3P315X1.5	SH71-3N6-4F
16RU8-316	OSPP250100001805000000000	BF3P315X2	SH71-3N6-6F
16S4OMLOS	OSPP250100001805000000000	BF40SX	SH71-3N6-6FV
16S4OMXS	OSPP250100001810000000000	BF48SX	SH71-3N6-8F
16S4OMXSS	OSPP250100001810000000000	BFG10L/LK35CF	SH71-3N8-8F

16S6MK4S	OSPP250100001810010000000	BFG10L/LK35CFX	SH71-3N8-8FV
16S6MLOS	OSPP250100001810010000000	BFG10L/LK35OMDCF	SH8-62
16S6MXS	OSPP250100001820000000000	BFG10L/LK35VITOMDCF	SH8-62-BSPP
16SC16-316	OSPP250100001820000000000	BFG10ZL/LK35CF	SH8-63
16SC16-6MO	OSPP250100001865000000000	BFG12L/LK35CF	SH8-63-BSPP
16SC16-IIY	OSPP250100001865000000000	BFG12L/LK35CFX	SHXDV06XMXX
16SC16-MMX	OSPP250100002275000000000	BFG12L/LK35OMDCF	SHXDV08XMXX
16SC16-TTZ	OSPP250100002275000000000	BFG12ZL/LK35CF	SHXDV10XMXX
16SLC1-A-50	OSPP25010000227500000F000	BFG15L/LK35CF	SHXDV12XMXX
16SLC2-A-150	OSPP25010000227500000F000	BFG15L/LK35CFX	SHXDV16XMXX
16SLC2-A-50	OSPP250100002715000000000	BFG15L/LK35OMDCF	SI-B
16SLC2-A-75	OSPP250100002715000000000	BFG15L/LK35VITOMDCF	SI-B
16SLC2-B-150	OSPP250100002915000000000	BFG15L/LK40CF	SIM8-AN-IN
16SLC2-B-25	OSPP250100002915000000000	BFG15L/LK40CFX	SIM8-IN-EVM32
16SLC2-B-75	OSPP250100002915300000000	BFG15L/LK40OMDCF	SIM8-OUT-NPN
16SLC3-B-150	OSPP250100002915300000000	BFG15ZL/LK35CF	SIM8-OUT-PNP
16SLC3-B-50	OSPP250100002935000000000	BFG15ZL/LK40CF	SIRL
16TT4LS	OSPP250100002935000000000	BFG16S/LK35CF	SJ14FN
16TT4MXSS	OSPP250100003265000000000	BFG16S/LK35CFX	SJ18FN
16TT4XS	OSPP250100003265000000000	BFG16S/LK35OMDCF	SJS14FN
16TTP4LS	OSPP250100003365000000000	BFG16S/LK35VITCF	SK000090
16TUCM12-316	OSPP250100003365000000000	BFG16ZS/LK35CF	SK000091
16TUCM25-316	OSPP250100003595000000000	BFG18L/LK35OMDCF	SK000092
16TUR10-316	OSPP250100003595000000000	BFG18L/LK40CF	SK000093
16TUR12-316	OSPP250100100700000000000	BFG18L/LK40OMDCF	SK000099
16TUR12-B	OSPP250100100700000000000	BFG18ZL/LK40CF	SK000100
16TUR12-IIY	OSPP250101001100000000000	BFG20S/LK55CF	SK000115
16TUR8-316	OSPP250101001100000000000	BFG20S/LK55OMDCF	SK000146
16TUR8-6MO	OSPP250110000500000000000	BFG20ZS/LK55CF	SK000156
16TUR8-B	OSPP250110000500000000000	BFG22L/LK40CF	SK000158
16TUR8-IIY	OSPP250110000500010000000	BFG22L/LK40CFX	SK000167
16TUR8-M	OSPP250110000500010000000	BFG22L/LK40OMDCF	SK000170
16TUR8-NNR	OSPP250110000659006000000	BFG22ZL/LK40CF	SK000182
16V3MXS	OSPP250110000659006000000	BFG28L/LK40CF	SK000183
16V3P4S	OSPP250110000700000000000	BFG28L/LK40CFX	SK000187
16V3T4S	OSPP250110000700000000000	BFG28L/LK40OMDCF	SK000191
16V4OMLOS	OSPP250110000945000000000	BFG28ZL/LK40CF	SK000209
16V4OMXS	OSPP250110000945000000000	BFG30S/LK55OMDCF	SK08
16V4OMXSS	OSPP250110001145000000000	BFG35L/LK40OMDCF	SK08-2V
16V5OMLOS	OSPP250110001145000000000	BFG35L/LK55CF	SK08-3
16V5OMXS	OSPP250200000125000000000	BFM10-316	SK08-3V
16V6MXS	OSPP250200000125000000000	BFM10-6MO	SK08-4
16WLNMLS	OSPP250200000200000000000	BFM10-825	SK09
16WLNMLSS	OSPP250200000200000000000	BFM10-B	SK10
16WLNMS	OSPP25020000020000000F000	BFM10-M	SK10-2
16WMK4WL4NMS	OSPP25020000020000000F000	BFM12-316	SK10-2V
16WMK4WL4NMSS	OSPP250200000250000000000	BFM12-6MO	SK10-3
16WMLOS	OSPP250200000250000000000	BFM12-825	SK10-3V
16WMLOWLNMLSS	OSPP250200000335000000000	BFM12-B	SK10-4
16WMTXS	OSPP250200000335000000000	BFM12-M	SK12
16WMTXWLNMB	OSPP250200000400070D00000	BFM14-316	SK12-2V
16WMTXWLNMS	OSPP250200000400070D00000	BFM15-316	SK12-3
16WMTXWLNMSS	OSPP250200000500000000000	BFM16-316	SK12S

16X6TU16-316	OSPP250200000500000000000	BFM16-6MO	SK13
16XABC16-316	OSPP250200000500070D00000	BFM16-825	SK-1327
16XASC16-316	OSPP250200000500070D00000	BFM16-B	SK135/S
16XEMQ1CF	OSPP250200000513000000000	BFM18-316	SK15
16XEMQ1SS	OSPP250200000513000000000	BFM18-6MO	SK158/H
16XEMQ2CF	OSPP250200000550000G00000	BFM18-825	SK158/L
16XEMQ2SS	OSPP250200000550000G00000	BFM18-B	SK16
16XHMQ1CF	OSPP250200000600000700000	BFM20-316	SK161
1700-16-00144-0000-000000	OSPP250200000600000700000	BFM20-6MO	SK16-2
1700-16-00144-0000-000000	OSPP250200000620000000000	BFM20-825	SK16-3
1700-16-00300-0000-000000	OSPP250200000620000000000	BFM22-316	SK16S
1700-16-00300-0000-000000	OSPP250200000900000000000	BFM2-316	SK16S_01
1700-16-00325-0000-000000	OSPP250200000900000000000	BFM25-316	SK20
1700-16-00325-0000-000000	OSPP250200000900000600000	BFM25-6MO	SK20-2
1700-16-00450-0000-000000	OSPP250200000900000600000	BFM25-825	SK20-2V
1700-16-00450-0000-000000	OSPP250200001000000600000	BFM3-316	SK-206168
1700-16-01400-0000-000000	OSPP250200001000000600000	BFM3-825	SK-210440001337
1700-16-01400-0000-000000	OSPP250200001000000A00000	BFM3-B	SK-210441004808
1700KAAK17SPN	OSPP250200001000000A00000	BFM4-316	SK-210441004959
1700KAAK17SPN_99	OSPP250200001100000000000	BFM6-316	SK22
1700KAAK21SPN	OSPP250200001100000000000	BFM6-6MO	SK-2264
1700KAAK21SPN_99	OSPP250200001100000000000X	BFM6-825	SK23
1700KAAK26SPN	OSPP250200001100000000000X	BFM6-B	SK23S
1700KAAK26SPN_99	OSPP250200001200001000000	BFM6-M	SK24
1700KAIW17SPN	OSPP250200001200001000000	BFM8-316	SK25
1700KAIW17SPN_99	OSPP250200001400000000000	BFM8-6MO	SK-2547
1700KAIW21SPN	OSPP250200001400000000000	BFM8-B	SK27
1700KAIW21SPN_99	OSPP250200001500000000000	BFM8-M	SK-2725
1700KAIW26SPN	OSPP250200001500000000000	BFW10L/LK35CF	SK27S
1700KAIW26SPN_99	OSPP250200006000000000000	BFW10L/LK35CFX	SK29
1700KATF10SPN	OSPP250200006000000000000	BFW10L/LK35OMDCF	SK30002N-1
1700KATF10SPN_99	OSPP250200101000000000000	BFW10ZL/LK35CF	SK30006N
1700KATF13SPN	OSPP250200101000000000000	BFW12L/LK35CF	SK30008N-1
1700KATF13SPN_99	OSPP250200101000000000000X	BFW12L/LK35CFX	SK30014N
1700KATF16SPN	OSPP250200101000000000000X	BFW12L/LK35OMDCF	SK30014N-1
1700KATF16SPN_99	OSPP250200101000000000000Y	BFW12S/LK35CF	SK30015N-1
1700KATF19SPN	OSPP250200101000000000000Y	BFW12ZL/LK35CF	SK30017N-1
1700KBAW17BPN	OSPP250201000270000000000	BFW12ZL/LK35VITCF	SK30018N
1700KBAW17BPN_01	OSPP250201000270000000000	BFW15L/LK35CF	SK30019N-1
1700KBAW21BPN	OSPP250201000360000000000	BFW15L/LK35CFX	SK30024N
1700KBAW21BPN_01	OSPP250201000360000000000	BFW15L/LK35OMDCF	SK30035N-1
1700KBAW26BPN	OSPP250201000430000000000	BFW15L/LK35VITCF	SK30038N-1
1700KBAW26BPN_01	OSPP250201000430000000000	BFW15L/LK40CF	SK30039N-1
1700KBIW17BPN	OSPP250201000500000000000	BFW15L/LK40CFX	SK30042N-1
1700KBIW17BPN_01	OSPP250201000500000000000	BFW15L/LK40OMDCF	SK30050N-1
1700KBIW21BPN	OSPP250201000610000000F000	BFW15ZL/LK35CF	SK30059N-1
1700KBIW21BPN_01	OSPP250201000610000000F000	BFW15ZL/LK40CF	SK30060N-1
1700KBIW26BPN	OSPP250201000615000000000	BFW16S/LK35CF	SK30065N-1
1700KBIW26BPN_01	OSPP250201000615000000000	BFW16S/LK35CFX	SK30077N-1
1700KBTF08BPN_01	OSPP250201000690000000000	BFW16S/LK35OMDCF	SK30077V-1
1700KBTF10BPN	OSPP250201000690000000000	BFW16S/LK35SA1OMDCF	SK30078N-1
1700KBTF10BPN_01	OSPP250201000925000000000	BFW16S/LK35VITCF	SK30079N-1
1700KBTF13BPN	OSPP250201000925000000000	BFW16S/LK55OMDCF	SK30081N-1

1700KBTF13BPN_01	OSPP250201001300001000000	BFW16ZS/LK35CF	SK30082N-1
1700KBTF16BPN	OSPP250201001300001000000	BFW18L/LK35CF	SK30087N
1700KBTF19BPN	OSPP250201001450000000000	BFW18L/LK35OMDCF	SK30087N-1
1700KBTF19BPN_01	OSPP250201001450000000000	BFW18L/LK40CF	SK30088N-1
1700KEAW17SPN	OSPP250201001600000E00000	BFW18L/LK40CFX	SK30089N-1
1700KEAW21SPN	OSPP250201001600000E00000	BFW18L/LK40OMDCF	SK30090N-1
1700KEAW26SPN	OSPP250201100160000200000	BFW18ZL/LK40CF	SK30091N-1
1700KEIW17SPN	OSPP250201100160000200000	BFW18ZL/LK40VITCF	SK30105N-1
1700KEIW21SPN	OSPP250201100180000200000	BFW20S/LK35CF	SK30500N-1
1700KEIW26SPN	OSPP250201100180000200000	BFW20S/LK35CFX	SK30501N-1
17036FIL	OSPP250201100430000200000	BFW20S/LK35OMDCF	SK30503N-1
17036FIL	OSPP250201100430000200000	BFW20S/LK35VITOMDCF	SK30503V-1
1709FIL	OSPP250201100700000000000	BFW20S/LK40CF	SK30504N-1
1709FIL	OSPP250201100700000000000	BFW20S/LK40CFX	SK30505N-1
170ECOLEASEFEE	OSPP25020110106800000F000	BFW20S/LK40OMDCF	SK30506N-1
170ECORENTFEE	OSPP25020110106800000F000	BFW20S/LK55CF	SK30507N-1
170EU400VDEM102	OSPP25020110124500000F000	BFW20S/LK55CFX	SK30507V-1
170EU400VDEM103	OSPP25020110124500000F000	BFW20S/LK55OMDCF	SK30509V-1
170EU400VECO	OSPP250210000400000E00000	BFW20ZS/LK35CF	SK30510N-1
170EU400VECOWCDEM09	OSPP250210000400000E00000	BFW20ZS/LK40CF	SK30514N-1
170EU400VECOWCDEM10	OSPP250210000700000000000	BFW20ZS/LK55CF	SK30514V-1
170EU400VECOWCDEM11	OSPP250210000700000000000	BFW22L/LK35OMDCF	SK30515N-1
170EU400VWCM	OSPP250212101100000000000	BFW22L/LK40CF	SK30529N-1
170FLAREPOWERDEMO	OSPP250212101100000000000	BFW22L/LK40CFX	SK35
170US440V60HZWCM	OSPP250212101250000000000	BFW22L/LK40OMDCF	SK38
1710B	OSPP250212101250000000000	BFW22L/LK40VITCF	SK40
1710B	OSPP250300000750000000000	BFW22L/LK40VITOMDCF	SK44.5
1711/12.6	OSPP250300000750000000000	BFW22L/LK55OMDCF	SK-44001130
17134FIL	OSPP250300000750E00000000	BFW22ZL/LK40CF	SK-44001294
17134FIL	OSPP250300000750E00000000	BFW22ZL/LK40VITCF	SK-441003395
17140FIL	OSPP250300000850000000000	BFW25S/LK55CF	SK-441003617
17140FIL	OSPP250300000850000000000	BFW25S/LK55CFX	SK-44102151
17155C	OSPP250300000850E00000000	BFW25S/LK55OMDCF	SK-44102155
1718.5/16	OSPP250300000850E00000000	BFW25ZS/LK55CF	SK-44102939
1718FIL	OSPP250300001600000000000	BFW28L/LK40CF	SK-44103232
1718FIL	OSPP250300001600000000000	BFW28L/LK40CFX	SK-44103235
17238FIL	OSPP250300001600500000000	BFW28L/LK40OMDCF	SK-44103393
17238FIL	OSPP250300001600500000000	BFW28L/LK40VITOMDCF	SK-44103785
1724FIL	OSPP250300001600E00000000	BFW28ZL/LK40CF	SK-44103786
1724FIL	OSPP250300001600E00000000	BFW30S/LK55CF	SK-44103927
1725FIL	OSPP250401000300010000000	BFW30S/LK55OMDCF	SK46
1725FIL	OSPP250401000300010000000	BFW30ZS/LK55CF	SK-46212761
1727FIL	OSPP250810100220000000000	BFW3-12L/LK30CF	SK-46212762
1727FIL	OSPP250810100220000000000	BFW3-12L/LK30OMDCF	SK-46212763
1727KAAK17SPN	OSPP250900100600000000000	BFW3-12ZL/LK30CF	SK-46212764
1727KAAK21SPN	OSPP250900100600000000000	BFW3-15L/LK30CF	SK-46212765
1727KAAK26SPN	OSPP250A00000100000000000	BFW3-15L/LK30OMDCF	SK-46212766
1727KAIW17SPN	OSPP250A00000100000000000	BFW3-15ZL/LK30CF	SK-46212767
1727KAIW21SPN	OSPP250A00000100001000000	BFW3-18L/LK30CF	SK-46215999
1727KAIW26SPN	OSPP250A00000100001000000	BFW3-18L/LK30OMDCF	SK-4D03B1
1727KATF10SPN	OSPP250A00000180000300000	BFW3-18ZL/LK30CF	SK-4DP03B1R1
1727KATF13SPN	OSPP250A00000180000300000	BFW3-22L/LK40CF	SK-5000991
1727KATF16SPN	OSPP250A00000250000000000	BFW3-22L/LK40OMDCF	SK-552-040

1727KATF19SPN	OSPP250A00000250000000000	BFW3-22ZL/LK40CF	SK71
1739FIL	OSPP250A00000250000E00000	BFW3-28L/LK40CF	SKA06X1.5
1739FIL	OSPP250A00000250000E00000	BFW3-28L/LK40OMDCF	SKA06X1.571
1740-16-00300-0010-000000	OSPP250A00000250000K00000	BFW3-28ZL/LK40CF	SKA06X1.75
1740-16-00300-0010-000000	OSPP250A00000250000K00000	BFW35L/LK40CF	SKA08X1.5
1756FIL	OSPP250A00000300000000000	BFW35L/LK40CFX	SKA08X1.571
1756FIL	OSPP250A00000300000000000	BFW35L/LK40OMDCF	SKA08X1.5VIT
17650P0007	OSPP250A00000300000300000	BFW35L/LK55CF	SKA08X2
1769FIL	OSPP250A00000300000300000	BFW35L/LK55CFX	SKA08X271
1769FIL	OSPP250A00000300001000000	BFW35L/LK55OMDCF	SKA10X1
1771FIL	OSPP250A00000300001000000	BFW35L/LK55VITCF	SKA10X1.5
1771FIL	OSPP250A00000350000000000	BFW35ZL/LK40CF	SKA10X1.571
1777FIL	OSPP250A00000350000000000	BFW35ZL/LK55CF	SKA10X1.5ORB71
1777FIL	OSPP250A00000400001000000	BFW3-G1/LK51CFM	SKA10X1.5VIT
1798-00500	OSPP250A00000400001000000	BFW3-G1/LK56CFM	SKA10X171
1798-00500	OSPP250A00000430000000000	BFW3-G1/LK62/12CF	SKA10X1VIT
1798-00700	OSPP250A00000430000000000	BFW3-G1/LK62CFM	SKA10X2
1798-00700	OSPP250A00000450000E00000	BFW3-G114/LK62/12CFM	SKA10X271
17991N-6-6	OSPP250A00000450000E00000	BFW3-G114/LK62CFM	SKA10X2RB
17APX-4-03S-LPG	OSPP250A00000500000000000	BFW3-G114/LK72.5CFM	SKA10X2RB71
17APX-6-03-LPG	OSPP250A00000500000000000	BFW3-G12/LK26CF	SKA10X2RBVIT
17APX-8-04-LPG	OSPP250A0000050000000F000	BFW3-G12/LK26CFM	SKA10X2VIT
17KAAK13SPN	OSPP250A0000050000000F000	BFW3-G12/LK30CF	SKA12X1.5
17KAAK13SPNS_99	OSPP250A00000500000D00000	BFW3-G12/LK30CFM	SKA12X1.571
17KAAK17SPN	OSPP250A00000500000D00000	BFW3-G12/LK40CF	SKA12X1.5ORB
17KAAK17SPNS_99	OSPP250A00000550001000000	BFW3-G12/LK40CFM	SKA12X1.5ORB71
17KAAK21SPN	OSPP250A00000550001000000	BFW3-G34/LK40CF	SKA12X1.5VIT
17KAAK21SPNS_99	OSPP250A00000588000000000	BFW3-G34/LK40CFM	SKA12X2
17KAAN13SPN	OSPP250A00000588000000000	BFW3-G34/LK51CF	SKA12X2.5
17KAIW13SPN	OSPP250A0000058800000F000	BFW3-G34/LK51CFM	SKA12X2.571
17KAIW13SPNS_99	OSPP250A0000058800000F000	BFW3-G34/LK56CFM	SKA12X2.5RB
17KAIW17SPN	OSPP250A00000700000000000	BFW3-G38/LK26CF	SKA12X2.5RB71
17KAIW21SPN	OSPP250A00000700000000000	BFW3-G38/LK26CFM	SKA12X2.5VIT
17KAIW21SPNS_99	OSPP250A00000700001000000	BFW3-G38/LK30CFM	SKA12X271
17KATF06SPN	OSPP250A00000700001000000	BFW42L/LK55CF	SKA12X2NBR71
17KATF08SPN	OSPP250A00000750000000000	BFW42L/LK55OMDCF	SKA12X2ORB
17KATF08SPNS_99	OSPP250A00000750000000000	BFW42L/LK55VITOMDCF	SKA12X2ORB71
17KATF10SPN	OSPP250A00000750000600000	BFW42ZL/LK55CF	SKA12X2VIT
17KATF10SPNS_99	OSPP250A00000750000600000	BFW-G1/LK40CFM	SKA14X2
17KATF13SPN	OSPP250A00000780000000000	BFW-G1/LK55CFM	SKA14X271
17SFAK10SXN	OSPP250A00000780000000000	BFW-G12/LK35CFM	SKA14X3
17SFAK13SXN	OSPP250A0000086000100000Y	BFW-G12/LK40CFM	SKA14X371
17SFAK17SXNS	OSPP250A0000086000100000Y	BFW-G12/LK55CFM	SKA15X2
17SFIW10SXN	OSPP250A0000087000100000X	BFW-G34/LK35CFM	SKA15X2.5
17SFIW13SXN	OSPP250A0000087000100000X	BFW-G34/LK40CFM	SKA15X2.571
17SFTF06SXN	OSPP250A0000088000100000X	BFW-G34/LK55CFM	SKA15X2.5VIT
17SFTF08SXN	OSPP250A0000088000100000X	BFW-G38/LK35CFM	SKA15X271
17SFTF10SXN	OSPP250A0000088000100000Y	BFW-G38/LK40CFM	SKA15X271BP
17SFTF13SXN	OSPP250A0000088000100000Y	BFW-GI1/LK55CFM	SKA16X1.5
1800 A	OSPP250A00000900000000000	BFW-GI12/LK35CF	SKA16X1.571
1800 A	OSPP250A00000900000000000	BFW-GI12/LK35CFM	SKA16X2
1800 ARUV	OSPP250A0000090000000F000	BFW-GI12/LK40CFM	SKA16X2.5
1800 ARV	OSPP250A0000090000000F000	BFW-GI12/LK55CFM	SKA16X2.571

1800 ARV	OSPP250A00001000000000000	BFW-GI34/LK40CFM	SKA16X2.5VIT
1800 AUV	OSPP250A00001000000000000	BFW-GI34/LK55CFM	SKA16X271
1800 AV	OSPP250A00001000001000000	BFW-GI38/LK35CF	SKA16X271BP
1800 AV	OSPP250A00001000001000000	BFW-GI38/LK35CFM	SKA16X2ORB
1800 B	OSPP250A0000105000100000Y	BFW-GI38/LK40CFM	SKA16X2ORB71
1800 B	OSPP250A0000105000100000Y	BFW-S12/LK30/M6S	SKA16X2VIT
1800 BRV	OSPP250A0000106000100000Y	BFW-S12/LK30/M6SM	SKA16X3
1800 BV	OSPP250A0000106000100000Y	BFW-S12/LK30/M8SM	SKA16X371
1800 C	OSPP250A0000122000100000Y	BFW-S14/LK30/M6SM	SKA16X3RB
1800 C	OSPP250A0000122000100000Y	BFW-S14/LK30/M8SM	SKA16X3RB71
1800 CV	OSPP250A00001240001000000	BFW-S14/LK35/M6SM	SKA16X3VIT
1800 E	OSPP250A00001240001000000	BFW-S14/LK35/M8SM	SKA16X3VITBLKOEL
1800 E	OSPP250A00001400000E00000	BFW-S16/LK30/M6SM	SKA18X2.5
1800 EA	OSPP250A00001400000E00000	BFW-S16/LK30/M8SM	SKA18X2.571
1800 EB	OSPP250A0000146000100000Y	BFW-S16/LK35/M6SM	SKA18X2.5VIT
1800 EB	OSPP250A0000146000100000Y	BFW-S16/LK35/M8SM	SKA18X271
1800 EK10	OSPP250A00001500000000000	BFW-S18/LK30/M6SM	SKA18X2ORB
1800 EK12	OSPP250A00001500000000000	BFW-S18/LK35/M6S	SKA18X2ORB71
1800 EK16	OSPP250A00002000000000000	BFW-S18/LK35/M6SM	SKA20X2
1800 EK19	OSPP250A00002000000000000	BFW-S18/LK35/M8SM	SKA20X2.5
1800 N	OSPP250A00002520000F00000	BFW-S18/LK40/M6SM	SKA20X2.571
1800 N	OSPP250A00002520000F00000	BFW-S18/LK40/M8SM	SKA20X2.5ORB
1800 NA	OSPP250A00002800001A00000	BFW-S20/LK35/M6S	SKA20X2.5ORB71
1800 NA	OSPP250A00002800001A00000	BFW-S20/LK35/M6SM	SKA20X2.5VIT
1800 NARV	OSPP250A00100790000000000	BFW-S20/LK40/M6SM	SKA20X231B71
1800 NARV	OSPP250A00100790000000000	BFW-S20/LK40/M8SM	SKA20X271
1800 NAV	OSPP250A01000100000000000	BFW-S22/LK40/M6SM	SKA20X2VIT
1800 NAV	OSPP250A01000100000000000	BFW-S22/LK40/M8SM	SKA20X3
1800 NB	OSPP250A01000100001000000	BFW-S25/LK40/M6SM	SKA20X3.5
1800 NB	OSPP250A01000100001000000	BFW-S25/LK40/M8SM	SKA20X3.571
1800 NBA	OSPP250A01000200000200000	BG0140AS030AAAB	SKA20X371
1800 NBRV	OSPP250A01000200000200000	BG0195CS030AAAB	SKA20X3ORB
1800 NBV	OSPP250A01000210000200000	BG0280AS030AAAB	SKA20X3ORB71
1800 NBV	OSPP250A01000210000200000	BG0280CS030AAAB	SKA20X3VIT
1800 NC	OSPP250A01000250003000000	BG0335AS030AAAB	SKA20X4
1800 NRV	OSPP250A01000250003000000	BG0335CS030AAAB	SKA20X471
1800 NRV	OSPP250A01000550000000000	BG0335CS050AAAB	SKA20X4RB
1800 NSV	OSPP250A01000550000000000	BG0335CS080AAAB	SKA20X4RB71
1800 NSV	OSPP250A01000550001000000	BG0335CS190AAAB	SKA22X1.5VIT
1800 NV	OSPP250A01000550001000000	BG0335CS190AATJ	SKA22X2.5
1800 NV	OSPP250A01000870000300000	BG0405AS030AAAB	SKA22X2.571
1800 RV	OSPP250A01000870000300000	BG0530CS030AAAA	SKA22X2.5ORB
1800 RV	OSPP250A01000950000000000	BG056524	SKA22X2.5VIT
1800 RVUV	OSPP250A01000950000000000	BG056524U002	SKA22X271
1800 SV	OSPP250A10000100000000000	BG0785CS030AAAB	SKA22X2ORB71
1800 UV	OSPP250A10000100000000000	BG0960AS030AAAB	SKA25X2.5
1800 V	OSPP25100000350000600000	BG388168	SKA25X3
1800 V	OSPP25100000350000600000	BG465150	SKA25X3.571
180-001122	OSPP25100000510000660000	BG466760	SKA25X371
180-006002	OSPP25100000510000660000	BG467497	SKA25X3ORB
180-006026	OSPP25100000540000200000	BG468003U001	SKA25X3ORB71
180-006041	OSPP25100000540000200000	BG469182U001	SKA25X3VIT
180-006043	OSPP25100000586100000000	BG469608U001	SKA25X4

180-006056	OSPP251000000586100000000	BG469779U025	SKA25X471
180-006057	OSPP251000000590000000000	BG469779U029	SKA25X4RB
180-006058	OSPP251000000590000000000	BG500406U001	SKA25X4RB71
18000FIL	OSPP251000000727000000000	BGAH11040WBP2XR486	SKA25X4RBVIT
18000FIL	OSPP251000000727000000000	BGAH1110QBP2ER481	SKA25X4VIT
18004FIL	OSPP251000000752000000000	BGAH1210CBE9ER481	SKA25X4VITBLKOEL
18004FIL	OSPP251000000752000000000	BGT1110QBG1ER323	SKA25X5
18006 RF	OSPP251000000800000000000	BGT1110QBP2ER32F	SKA25X571
18007FIL	OSPP251000000800000000000	BGT1110QBP2ER32M3	SKA25X5RB
18007FIL	OSPP251000000870000000000	BGT1110QBPER323	SKA25X5RB71
1800-QC	OSPP251000000870000000000	BGT1110QBPXR321	SKA25X5VIT
1800-QC	OSPP251000001200000000000	BGT1110QBS1ER323	SKA28X2.5
18012 M	OSPP251000001200000000000	BGT1110QLBG1ER32S25	SKA28X2.571
18012 M	OSPP251000001367100000000	BGT1110QLBPER323	SKA28X2.5VIT
1802 06 00	OSPP251000001367100000000	BGT1110QLBS1ER323	SKA28X271
1802 08 00	OSPP251000001412000000000	BGT1110QLBS2ER32MF	SKA28X2ORB
1802 10 00	OSPP251000001412000000000	BGT11C10QBP2ER32B	SKA28X3
1802 12 00	OSPP251000001440000000000	BGT1205QLBG1ER323	SKA28X371
1802 16 00	OSPP251000001440000000000	BGT1205QLBPER323	SKA28X3VIT
18020FIL	OSPP251000001527000000000	BGT1205QLBS1ER323	SKA30X3
18020FIL	OSPP251000001527000000000	BGT1210QBG1ER323	SKA30X371
18021FIL	OSPP251000001527100000000	BGT1210QBP2ER32A	SKA30X3VIT
18021FIL	OSPP251000001527100000000	BGT1210QBPER323	SKA30X4
18022FIL	OSPP251000002527000000000	BGT1210QBPER32B	SKA30X471
18022FIL	OSPP251000002527000000000	BGT1210QBS1ER323	SKA30X4RB
18023FIL	OSPP251000100700000000000	BGT1210QLBG1ER323	SKA30X4RB71
18023FIL	OSPP251000100700000000000	BGT1210QLBPBR323	SKA30X4VIT
18028FIL	OSPP251000100900000000000	BGT1210QLBPER323	SKA30X5
18028FIL	OSPP251000100900000000000	BGT1210QLBS1ER323	SKA30X571
180-300060	OSPP251001001045000000000	BGT1210QVPER323	SKA30X5RB
180-300061	OSPP251001001045000000000	BGT1220QBP2EG32A	SKA30X5VIT
180-300062	OSPP251100001660000000000	BGT1220QLBG1ER323	SKA30X6
180-303102	OSPP251100001660000000000	BGT1220QLBPER323	SKA35X2.5
1804 06 00	OSPP252000000550000000000	BGT12XXXLBPER323	SKA35X2.571
1804 08 00	OSPP252000000550000000000	BGT1310QLBPER483	SKA35X3.5
1804 10 00	OSPP253001000400000A00000	BGT13XXXLBPER483	SKA35X3.571
1804 12 00	OSPP253001000400000A00000	BGT1402QLBG1ER481	SKA35X3.5VIT
1804 16 00	OSPP254700100500000000000	BGT1405QLBS1ER483	SKA35X4
18047FIL	OSPP254700100500000000000	BGT1410QBPER483	SKA35X471
18047FIL	OSPP254700100580000000000	BGT1410QBPER483S31	SKA38X3
1805 06 10	OSPP254700100580000000000	BGT1410QLBG1ER483	SKA38X371
1805 06 11	OSPP254700100650000000000	BGT1410QLBPER483	SKA38X4
1805 06 13	OSPP254700100650000000000	BGT1410QLBS1ER483	SKA38X471
1805 06 14	OSPP254710100200000000000	BGT14XXXLBPER483	SKA38X4ORB
1805 06 18	OSPP254710100200000000000	BGT1502QLBG1ER481	SKA38X4VIT
1805 06 22	OSPP256000000100000004000	BGT1505QLBG1ER483	SKA38X5
1805 08 10	OSPP256000000100000004000	BGT1505QLBPER483	SKA38X571
1805 08 11	OSPP256000000800000000000	BGT1505QLBS1ER483	SKA38X5RB
1805 08 13	OSPP256000000800000000000	BGT1510QBG1ER483	SKA38X5RB71
1805 08 14	OSPP256000000955000000000	BGT1510QBPE3R201	SKA38X5VIT
1805 10 13	OSPP256000000955000000000	BGT1510QBPER483	SKA38X6
1805 10 14	OSPP256001000350000200000	BGT1510QLBG1ER481	SKA38X671
1805 10 17	OSPP256001000350000200000	BGT1510QLBG1ER483	SKA38X6RB

1805 10 18	OSPP25600100180030000000	BGT1510QLBP2ER483	SKA38X7
1805 10 21	OSPP25600100180030000000	BGT1510QLBPER481	SKA38X771
1805 10 22	OSPP25620100041000000000	BGT1510QLBPER483	SKA42X2
1805 12 13	OSPP25620100041000000000	BGT1510QLBS1ER483	SKA42X2VIT
1805 12 14	OSPP25620100051000000000	BGT1510QVPER481	SKA42X3
1805 12 17	OSPP25620100051000000000	BGT1520QLBG1ER481	SKA42X371
1805 12 18	OSPP25620100092500000000	BGT1520QLBPER483	SKA42X3ORB
1805 12 21	OSPP25620100092500000000	BGT15XXXLBPER483	SKA42X3ORB71
1805 12 22	OSPP25620100108000000000	BGT1602QLBG1ER481	SKA42X3VIT
1805 16 17	OSPP25620100108000000000	BGT1610QLBS1ER483	SKA42X4
1805 16 21	OSPP25620110025000020000	BGT16XXXLBPER483	SKA42X471
1805 16 22	OSPP25620110025000020000	BGT1702QBS1ER483	SKAB1163
18052FIL	OSPP25620110043000020000	BGT1705QVPER483	SKAB1380
18052FIL	OSPP25620110043000020000	BGT1710QBG1ER483	SKAR10/06X1.5
18055FIL	OSPP25C000000055000000000	BGT1710QBP2ER483	SKAR10/08X1.5
18055FIL	OSPP25C000000055000000000	BGT1710QBPER483	SKAR10/08X2
18056FIL	OSPP25C000000100000000000	BGT1710QBS1ER483	SKAR10/08X271
18056FIL	OSPP25C000000100000000000	BGT1720QBPER483	SKAR12/08X2
18057FIL	OSPP25C000000120000000000	BGT17XXXBPER483	SKAR12/10X1.5
18057FIL	OSPP25C000000120000000000	BH0335CS320AAAB	SKAR12/10X1.571
1806 06 00	OSPP25C000000125000000000	BH1/8-27PTF	SKAR16/08X2
1806 08 00	OSPP25C000000125000000000	BH1-60	SKAR16/10X1.5
1806 10 00	OSPP25C000000130000000000	BH1-60-BSPP	SKAR16/10X2
1806 12 00	OSPP25C000000130000000000	BH1-61	SKAR16/10X271
1806 16 00	OSPP25C000000150000000000	BH1-61-BSPP	SKAR16/12X1.571
180-600075	OSPP25C000000150000000000	BH2-60	SKAR16/12X2
180-600077	OSPP25C000000190000000000	BH2-60-BSPP	SKAR16/12X2.5
18063FIL	OSPP25C000000190000000000	BH2-61	SKAR16/12X2.571
18063FIL	OSPP25C000000200000000000	BH2-61-BSPP	SKAR16/12X2.5VIT
1808-QC	OSPP25C000000200000000000	BH3-60	SKAR16/12X271
1808-QC	OSPP25C000000200000C00000	BH3-60-BSPP	SKAR18/12X1.571
1809 06 10	OSPP25C000000200000C00000	BH3-61	SKAR18/15X1.571
1809 06 11	OSPP25C000000220000000000	BH3-61-BSPP	SKAR20/08X2
1809 06 13	OSPP25C000000220000000000	BH4-60	SKAR20/12X1.571
1809 06 14	OSPP25C00000023000000F000	BH4-60-BSPP	SKAR20/12X2
1809 06 22	OSPP25C00000023000000F000	BH4-61	SKAR20/12X2.5
1809 08 10	OSPP25C000000230000C00000	BH4-61-BSPP	SKAR20/12X2.571
1809 08 11	OSPP25C000000230000C00000	BH465850	SKAR20/12X271
1809 08 13	OSPP25C000000250000000000	BH6-60	SKAR20/16X2
1809 08 14	OSPP25C000000250000000000	BH6-60-BSPP	SKAR20/16X2.5
1809 10 13	OSPP25C000000250000C00000	BH6-61	SKAR20/16X2.571
1809 10 14	OSPP25C000000250000C00000	BH6-61-BSPP	SKAR20/16X271
1809 10 17	OSPP25C000000260000000000	BH8-60	SKAR20/16X3
1809 10 18	OSPP25C000000260000000000	BH8-60-BSPP	SKAR20/16X371
1809 10 21	OSPP25C000000275000000000	BH8-61	SKAR20/16X3VIT
1809 10 22	OSPP25C000000275000000000	BH8-61-BSPP	SKAR25/12X2
1809 12 13	OSPP25C000000276000000000	BHPH15	SKAR25/12X2.5
1809 12 14	OSPP25C000000276000000000	BHPH15	SKAR25/12X271
1809 12 17	OSPP25C000000280000000000	BK300	SKAR25/16X2
1809 12 18	OSPP25C000000280000000000	BK310	SKAR25/16X2.5
1809 12 21	OSPP25C000000300000000000	BK311	SKAR25/16X2.571
1809 12 22	OSPP25C000000300000000000	BK320	SKAR25/16X271
1809 16 17	OSPP25C000000300000C00000	BK321	SKAR25/16X3

1809 16 21	OSPP25C000000300000C00000	BK-358-16330-0	SKAR25/16X3VIT
1809 16 22	OSPP25C000000310070C00000	BK-358-16350-0	SKAR25/20X2
1810 06 00	OSPP25C000000310070C00000	BK-358-16360-0	SKAR25/20X2.5
1810 08 00	OSPP25C000000320000000000	BK-358-16420-0	SKAR25/20X2.571
1810 10 00	OSPP25C000000320000000000	BK-358-16430-0	SKAR25/20X3
1810 12 00	OSPP25C000000330000000000	BK-358-16440-0	SKAR25/20X371
1810 16 00	OSPP25C000000330000000000	BK-358-18340-0	SKAR25/20X4
1810-1	OSPP25C000000330000009000	BK-358-18380-0	SKAR25/20X4VIT
18110 A	OSPP25C000000330000009000	BK-358-18460-0	SKAR28/22X2.571
18110 A	OSPP25C000000350000000000	BK-358-18500-0	SKAR30/12X2
1812 R	OSPP25C000000350000000000	BK-358-20400-0	SKAR30/12X271
1813FIL	OSPP25C000000350000C00000	BK-358-20470-0	SKAR30/12X371
1813FIL	OSPP25C000000350000C00000	BK-358-20520-0	SKAR30/16X2
1814 06 10	OSPP25C000000380000000000	BK-359-15340-0	SKAR30/16X2.571
1814 06 13	OSPP25C000000380000000000	BK-359-15380-8	SKAR30/16X271
1814 08 13	OSPP25C000000390000000000	BK360	SKAR30/20X2.5
1814 10 17	OSPP25C000000390000000000	BK366	SKAR30/20X2.571
1814 10 21	OSPP25C000000400000000000	BK375	SKAR30/20X371
1814 12 17	OSPP25C000000400000000000	BK380	SKAR30/25X3
1814 12 21	OSPP25C000000420000000000	BK381	SKAR30/25X371
1814 16 21	OSPP25C000000420000000000	BK385	SKAR30/25X3VIT
1814FIL	OSPP25C000000430000000000	BK386	SKAR30/25X4
1814FIL	OSPP25C000000430000000000	BK387	SKAR30/25X471
1815FIL	OSPP25C000000440000000000	BK388	SKAR38/16X2
1815FIL	OSPP25C000000440000000000	BK389	SKAR38/16X271
1816 06 00	OSPP25C000000450000000000	BK390	SKAR38/20X2.5
1816 08 00	OSPP25C000000450000000000	BK391	SKAR38/20X2.571
1816 10 00	OSPP25C000000450000C00000	BK395	SKAR38/20X371
1816 12 00	OSPP25C000000450000C00000	BK399	SKAR38/20X471
1816 16 00	OSPP25C000000460000000000	BK400	SKAR38/25X3
1816FIL	OSPP25C000000460000000000	BK401	SKAR38/25X371
1816FIL	OSPP25C000000470000000000	BK402	SKAR38/25X4
1817 00 10	OSPP25C000000470000000000	BK403	SKAR38/25X471
1817 00 13	OSPP25C000000476000000000	BK404	SKAR38/30X371
1817 00 17	OSPP25C000000476000000000	BK405	SKAR38/30X4
1817 00 21	OSPP25C000000480000000000	BK406	SKAR38/30X471
1817 00 27	OSPP25C000000480000000000	BK407	SKAR38/30X5
1817 00 34	OSPP25C000000500000000000	BK408	SK-C10DC10E160
1817FIL	OSPP25C000000500000000000	BK412	SK-C10DC10E250
1817FIL	OSPP25C000000500000C00000	BK414	SK-C10DC10E320
1818 00 00 02	OSPP25C000000500000C00000	BK415	SK-C10DC10E400
18190FIL	OSPP25C000000500000C0F000	BK416	SK-C10DC10E500
18190FIL	OSPP25C000000500000C0F000	BK417	SK-C10DC10E630
1819FIL	OSPP25C000000500100C03000	BK418	SK-C12DBWE500
1819FIL	OSPP25C000000500100C03000	BK419	SK-C13DB10E250
1820 06 10	OSPP25C000000530000000000	BK420	SK-C13DB10E250V
1820 06 11	OSPP25C000000530000000000	BK421	SK-C13DB10E320
1820 06 13	OSPP25C000000550000000000	BK422	SK-C13DB10E400
1820 06 14	OSPP25C000000550000000000	BK424	SK-C13DB10E500V
1820 08 10	OSPP25C000000570000000000	BK426	SK-C13DB10E630
1820 08 11	OSPP25C000000570000000000	BK429	SK-C13DC10E500
1820 08 13	OSPP25C000000576000000000	BK443	SK-C18DB10E250
1820 08 14	OSPP25C000000576000000000	BK444	SK-C18DB10E400

1820 10 13	OSPP25C000000580000000000	BK460	SK-C18DB10E500
1820 10 14	OSPP25C000000580000000000	BK463	SK-C18DB12E250
1820 10 17	OSPP25C000000590000000000	BK466	SK-C18DB12E320
1820 10 18	OSPP25C000000590000000000	BK468	SK-C18DB12E320V
1820 10 21	OSPP25C000000600000000000	BK481	SK-CAE155
1820 10 22	OSPP25C000000600000000000	BK484	SK-CAE155V
1820 12 13	OSPP25C000000600000C00000	BK485	SK-CAE322
1820 12 14	OSPP25C000000600000C00000	BK486	SK-CAE322V
1820 12 17	OSPP25C000000620000000000	BK487	SK-CAE322X425
1820 12 18	OSPP25C000000620000000000	BK490	SK-CAE406
1820 12 21	OSPP25C000000650000000000	BK494	SK-CBE1000
1820 12 22	OSPP25C000000650000000000	BK499	SK-CBE1000V
1820 16 17	OSPP25C000000655000000000	BK500	SK-CBE1000X425
1820 16 18	OSPP25C000000655000000000	BK501	SK-CBE160
1820 16 21	OSPP25C000000660060C00000	BK502	SK-CBE160V
1820 16 22	OSPP25C000000660060C00000	BK504	SK-CBE160X425
18204FIL	OSPP25C000000670000C00000	BK504Y	SK-CBE250
18204FIL	OSPP25C000000670000C00000	BK504Y	SK-CBE250V
18206FIL	OSPP25C000000700000000000	BK505	SK-CBE250X425
18206FIL	OSPP25C000000700000000000	BK508	SK-CBE320
1821 10 10	OSPP25C000000700000C00000	BK512	SK-CBE320V
1821 11 11	OSPP25C000000700000C00000	BK514	SK-CBE320X425
1821 13 10	OSPP25C000000700000C0F000	BK516	SK-CBE400
1821 13 13	OSPP25C000000700000C0F000	BK526	SK-CBE400V
1821 14 14	OSPP25C000000720000C00000	BK603B	SK-CBE400X425
1821 17 13	OSPP25C000000720000C00000	BK603B	SK-CBE500
1821 17 17	OSPP25C000000750000000000	BK605WB	SK-CBE500V
1821 18 18	OSPP25C000000750000000000	BK605WB	SK-CBE500X425
1821 21 17	OSPP25C000000775000000000	BK605WY	SK-CBE630
1821 21 21	OSPP25C000000775000000000	BK605WY	SK-CBE630V
1821 22 22	OSPP25C000000800000000000	BKE-GV	SK-CBE630X425
1821 27 21	OSPP25C000000800000000000	BKF105B	SK-CBE800
1821 27 27	OSPP25C000000820000000000	BKF105B	SK-CBE800V
1821 28 28	OSPP25C000000820000000000	BKF35A	SK-CBE800X425
1821 34 27	OSPP25C000000820100000000	BKF35A	SK-CDE1004
1821 34 34	OSPP25C000000820100000000	BKF75D	SK-CDE1004V
1821 35 35	OSPP25C000000840000000000	BKF75D	SK-CDE1254
18210 A	OSPP25C000000840000000000	BKT1CS/1	SK-CDE504
18210 R	OSPP25C000000850000000000	BKT1-SS/1	SK-CDE504V
18210 SV	OSPP25C000000850000000000	BKT2CS/1	SK-CDE504X425
18211FIL	OSPP25C000000900000000000	BKT2-SS/1	SK-CDE704
18211FIL	OSPP25C000000900000000000	BKT3CS/1	SK-CDE704V
18212FIL	OSPP25C000000910000000000	BKT3-SS/1	SK-CE032-XG019
18212FIL	OSPP25C000000910000000000	BKT4CS/1	SK-CE040VXG019
1822 06 07	OSPP25C000000920000000000	BKT4-SS/1	SK-CM2-10
1822 08 06	OSPP25C000000920000000000	BKT5CS/1	SK-CM2-V-10
1822 08 07	OSPP25C000000960000000000	BKT5SS/1	SK-CM3-10
1822 08 10	OSPP25C000000960000000000	BL67-4DI-PD	SK-CM3-V-50
1822 10 07	OSPP25C000000990000000000	BL67-4DI-PD	SK-CPOM2-11
1822 10 10	OSPP25C000000990000000000	BL67-4DO-2A-P	SK-CPOM2HT
1822 12 10	OSPP25C000001000000000000	BL67-4DO-2A-P	SK-CPOM2HTV
1822 12 13	OSPP25C000001000000000000	BL67-B-1RSM	SK-CPOM2-V-11
18220 M	OSPP25C000001040000000000	BL67-B-1RSM	SK-CPOM3HT

1822-03460	OSPP25C000001040000000000	BL67-B-4M12	SK-CPOM3-V-11
1822-03460	OSPP25C000001050000000000	BL67-B-4M12	SK-CPOM4HTV
1823 07 10	OSPP25C000001050000000000	BL67-B-4M8	SK-CPOM4-V-10
1823 07 13	OSPP25C000001050070C00000	BL67-B-4M8	SK-CPOM6-V-20
1823 10 13	OSPP25C000001050070C00000	BL67-GW-EN	SK-D111FB
1823 10 17	OSPP25C000001060000000000	BL67-GW-EN	SK-D111FH
1823 13 17	OSPP25C000001060000000000	BL67-PF-24VDC	SK-D111FP-V
1823 16 21	OSPP25C000001100000000000	BL67-PF-24VDC	SK-D111FS
1823 56 11	OSPP25C000001100000000000	BLENM10-316	SK-D111VW
1823 56 14	OSPP25C000001150000000000	BLENM10-316-OXY	SK-D1DL-75
1823 60 14	OSPP25C000001150000000000	BLENM10-6MO	SK-D1DL-77
1823 60 18	OSPP25C000001160000000000	BLENM10-B	SK-D1DL-V77
1823-00600	OSPP25C000001160000000000	BLENM10-IIY	SK-D1DW-75
1823-00600	OSPP25C000001200000000000	BLENM10-M	SK-D1DW-V75
1823-00650	OSPP25C000001200000000000	BLENM10-NNR	SK-D1FB
1823-00650	OSPP25C000001220000000000	BLENM10-TTZ	SK-D1FB-V
1823-03460	OSPP25C000001220000000000	BLENM12-316	SK-D1FP
1823-03460	OSPP25C000001260010000000	BLENM12-6MO	SK-D1FP-V
1823-04000	OSPP25C000001260010000000	BLENM12-825	SK-D1FTE22
1823-04000	OSPP25C000001400000000000	BLENM12-B	SK-D1FTE22V
18238FIL	OSPP25C000001400000000000	BLENM12-IIY	SK-D1FVE
18238FIL	OSPP25C000001410000000000	BLENM12-NNR	SK-D1SE-70
1824 06 00	OSPP25C000001410000000000	BLENM12-TTZ	SK-D1SE-V70
1824 08 00	OSPP25C000001460000000000	BLENM14-316	SK-D1VL-N-91
1824 10 00	OSPP25C000001460000000000	BLENM14-825	SK-D1VP-70
1824 12 00	OSPP25C000001460010000000	BLENM15-316	SK-D1VP-V70
1824 16 00	OSPP25C000001460010000000	BLENM16-316	SK-D1VW-52
18246FIL	OSPP25C000001490000000000	BLENM16-6MO	SK-D1VW-70
18246FIL	OSPP25C000001490000000000	BLENM16-TTZ	SK-D1VW-91-X908-DC
18255FIL	OSPP25C000001500000000000	BLENM18-316	SK-D1VW-E91
18255FIL	OSPP25C000001500000000000	BLENM18-6MO	SK-D1VW-N91
18269-02480	OSPP25C00000150000000F000	BLENM18-B	SK-D1VW-V-52
18269-02480	OSPP25C00000150000000F000	BLENM18-TTZ	SK-D1VW-V70
1827 06 00	OSPP25C000001550000000000	BLENM20-316	SK-D1VW-V91
1827 08 00	OSPP25C000001550000000000	BLENM20-6MO	SK-D31DW75
1827 10 00	OSPP25C000001600000000000	BLENM20-MMX	SK-D31DWN91
1827 12 00	OSPP25C000001600000000000	BLENM22-316	SK-D31FB
1827 12 09	OSPP25C000001700000000000	BLENM2-316	SK-D31FH20
1827 16 00	OSPP25C000001700000000000	BLENM25-316	SK-D31FH20V
18270-02480	OSPP25C000001750000000000	BLENM25-6MO	SK-D31FHN
18270-02480	OSPP25C000001750000000000	BLENM25-TTZ	SK-D31FHV
18272FIL	OSPP25C000001800000000000	BLENM3-316	SK-D31FS-10
18272FIL	OSPP25C000001800000000000	BLENM3-316-OXY	SK-D31FTN
18284FIL	OSPP25C000001800000000M00	BLENM4-316	SK-D31NWN91
18284FIL	OSPP25C000001800000000M00	BLENM4-316-OXY	SK-D31VW-22
18285FIL	OSPP25C000001800000C00000	BLENM6-316	SK-D31VW65
18285FIL	OSPP25C000001800000C00000	BLENM6-6MO	SK-D31VWV65
18300FIL	OSPP25C000001800010000000	BLENM6-B	SK-D36FH40
18300FIL	OSPP25C000001800010000000	BLENM6-M	SK-D36FH-V
18301FIL	OSPP25C000001860000000000	BLENM6-NNR	SK-D3DLN35
18301FIL	OSPP25C000001860000000000	BLENM6-TTZ	SK-D3DLV35
18302FIL	OSPP25C000001900000000000	BLENM8-316	SK-D3DP-35
18302FIL	OSPP25C000001900000000000	BLENM8-6MO	SK-D3DW-35

18303FIL	OSPP25C000002120000000000	BLENM8-B	SK-D3DW-V-35
18303FIL	OSPP25C000002120000000000	BLENM8-M	SK-D3FB
18304FIL	OSPP25C000002220000000000	BLIR1.B086	SK-D3FB-N
18304FIL	OSPP25C000002220000000000	BLIR2.B033	SK-D3FB-V
18315FIL	OSPP25C000002250000000000	BLPM10-316	SK-D3FP
18315FIL	OSPP25C000002250000000000	BLPM10-625	SK-D3LN65
1831FIL	OSPP25C000003610000000000	BLPM10-6MO	SK-D3W-22
1831FIL	OSPP25C000003610000000000	BLPM10-B	SK-D3W-30
1832FIL	OSPP25C000100275000000000	BLPM10-HC	SK-D3W-V-22
1832FIL	OSPP25C000100275000000000	BLPM10-M	SK-D3W-V-30
18332FIL	OSPP25C00010027500000F000	BLPM10-TI	SK-D41FB-V
18332FIL	OSPP25C00010027500000F000	BLPM12-316	SK-D41FH20
18356FIL	OSPP25C000100950000000000	BLPM12-625	SK-D41FHN
18356FIL	OSPP25C000100950000000000	BLPM12-6MO	SK-D41FHV
18357FIL	OSPP25C001000250000000000	BLPM12-6MO-NC	SK-D41FS10
18357FIL	OSPP25C001000250000000000	BLPM12-825	SK-D41FSV
18358FIL	OSPP25C00100025000000F000	BLPM12-B	SK-D41FT10
18358FIL	OSPP25C00100025000000F000	BLPM12-HC	SK-D41FTV
18360FIL	OSPP25C001000275000000000	BLPM12-M	SK-D41FW
18360FIL	OSPP25C001000275000000000	BLPM12-TI	SK-D41VW-70
18397FIL	OSPP25C001000800000000000	BLPM15-316	SK-D41VW-N-91
18397FIL	OSPP25C001000800000000000	BLPM16-316	SK-D41VW-V-18
18410 MN	OSPP25C00100106000000F000	BLPM16-6MO	SK-D41VW-V70
18410 MN	OSPP25C00100106000000F000	BLPM16-TI	SK-D41VW-V-91
18410 MNV	OSPP25C00100146000000F000	BLPM18-316	SK-D46FH20
18410 MNV	OSPP25C00100146000000F000	BLPM18-6MO	SK-D4LN60
18410 R	OSPP25C001100765000000000	BLPM18-B	SK-D61VW-V-42
18410 R	OSPP25C001100765000000000	BLPM18-TI	SK-D81FH20
18410 RV	OSPP25C010000120000000000	BLPM20-316	SK-D81FHN
18410 RV	OSPP25C010000120000000000	BLPM20-6MO	SK-D81FHV
18410 S	OSPP25C010000230000000000	BLPM20-TI	SK-D81FP
18410 STN	OSPP25C010000230000000000	BLPM22-316	SK-D81FS10
18410 STN	OSPP25C010000350060C00000	BLPM2-316	SK-D81VW-60
18410 STV	OSPP25C010000350060C00000	BLPM25-316	SK-D81VW-70
18410 STV	OSPP25C010000450000000000	BLPM25-6MO	SK-D81VW-N-91
18411 M	OSPP25C010000450000000000	BLPM25-TI	SK-D81VW-V60
18411 M	OSPP25C010000500000000000	BLPM3-316	SK-D81VW-V70
18420 MN	OSPP25C010000500000000000	BLPM3-316-OXY	SK-D81VW-V-91
18422 MNA	OSPP25C010000860000000000	BLPM4-316	SK-D8P60
18422 MNAV	OSPP25C010000860000000000	BLPM4-316-OXY	SK-D91FB
18422 MNAV	OSPP25C010001260100000000	BLPM6-316	SK-D91FHN
18422 RV	OSPP25C010001260100000000	BLPM6-316-OXY	SK-D91FHV
18422 RV	OSPP25C010001260110000000	BLPM6-625	SK-D91FS10
1843 10 10	OSPP25C010001260110000000	BLPM6-625-NC	SK-D91FT
1843 13 13	OSPP25C010001460100000000	BLPM6-6MO	SK-D91FW
1843 17 17	OSPP25C010001460100000000	BLPM6-B	SK-D91VW-70
1843 21 21	OSPP25C010001460110000000	BLPM6-HC	SK-D91VW-N-91
1843 27 27	OSPP25C010001460110000000	BLPM6-HC-NC	SK-D91VW-V70
1843 34 34	OSPP25C010001660000000000	BLPM6-M	SK-D96FH-N21
18430 M	OSPP25C010001660000000000	BLPM6-TI	SK-D96FH-N35
18430 MN	OSPP25C010001860000000000	BLPM8-316	SK-DAFA10P07
1844 10 10	OSPP25C010001860000000000	BLPM8-316-OXY	SK-DAFA2P25
1844 13 13	OSPP25C010001860110000000	BLPM8-6MO	SK-DAFB10E16

1844 17 17	OSPP25C010001860110000000	BLPM8-B	SK-DAFB2P04
1844 21 21	OSPP25C010002060100000000	BLPM8-M	SK-DAFB2P04V
1844 27 27	OSPP25C010002060100000000	BM059104U179	SK-DAFB5P15
1844 34 34	OSPP25C010004500000000000	BMB10	SK-DAFD2E32
18446FIL	OSPP25C010004500000000000	BMB12	SK-DAFD2E32V
18446FIL	OSPP25C010100100000000000	BMB4	SK-DAFD2P25
1844FIL	OSPP25C010100100000000000	BMB6	SK-DAFD2P40
1844FIL	OSPP25C010100150000000000	BMB8	SK-DAFD5P20
1845 10 10	OSPP25C010100150000000000	BN059115U061	SK-DAFE2P25V
1845 13 13	OSPP25C010100400000000000	BN059115U062	SK-DAVG5P20
1845 17 17	OSPP25C010100400000000000	BN059115U063	SK-DAVN10E25
1845 21 21	OSPP25C010100500000000000	BN20	SK-DAVN10E32
1845 27 27	OSPP25C010100500000000000	BN50	SK-DAVN10E40
1845 34 34	OSPP25C100000860000000000	BNX120	SK-DAVN10E50
18461FIL	OSPP25C100000860000000000	BNX160	SK-DAVN4E50
18461FIL	OSPP25C110001220000000000	BNX40	SK-DDRE15
18511FIL	OSPP25C110001220000000000	BNX60	SK-DDRE25
18511FIL	OSPP25C200000330000000000	BNX90	SK-DDSE15
18512FIL	OSPP25C200000330000000000	BO466785U003	SK-DDSE25
18512FIL	OSPP25C200001800000C00000	BO471517U002	SK-DDSE25V
18530FIL	OSPP25C200001800000C00000	BO501911U001	SK-DDSP15
18530FIL	OSPP25CA00000100000000000	BOBINA1213/2	SK-DFHA5P20V
1853FIL	OSPP25CA00000100000000000	BODY DIE M12	SK-DNLA3P15
1853FIL	OSPP25CA00000400000000000	BODY DIE M16	SK-DREAA10E25
1855 10 10	OSPP25CA00000400000000000	BODY DIE M20	SK-DRLA10E25
1855 13 13	OSPP25CA00000500000000000	BOWL ASY P3N-FA	SK-DRLA10E32
1855 17 17	OSPP25CA00000500000000000	BOWL ASY P3N-FA	SK-DRLA10E50
1855 21 21	OSPP25CA00000550000000000	BOX-D1VW-1	SK-DRLA2P04
1855 27 27	OSPP25CA00000550000000000	BOX-D1VW-2	SK-DRLA5E15
1855 34 34	OSPP25CB00000800000000000	BP2EV0005	SK-DRLE2P25
18559FIL	OSPP25CB00000800000000000	BP2EV0005	SK-DSAA10P07
18559FIL	OSPP25F000000125000000000	BP2EV0010	SK-DSAA10Z07
1855FIL	OSPP25F000000125000000000	BP2EV0010	SK-DSAB2P04
1855FIL	OSPP25F000000200000000000	BP2EV0011	SK-DSAB2P04V
18576FIL	OSPP25F000000200000000000	BP2EV0011	SK-DSAB4E50
18576FIL	OSPP25F000000250000000000	BP2EV0013	SK-DSAB5E15
185-810100	OSPP25F000000250000000000	BP2EV0013	SK-DSAB5P15V
1859-00880	OSPP25F000000300000000000	BPA1	SK-DSAC2R
1859-00880	OSPP25F000000300000000000	BPA2	SK-DSAC5P20
1859-00960	OSPP25F000000350000000000	BPA3	SK-DSACD2E32
1859-00960	OSPP25F000000350000000000	BPA4	SK-DSACD4E50
18593FIL	OSPP25F000000400000000000	BPA5	SK-DSAE10E25
18593FIL	OSPP25F000000400000000000	BPA6	SK-DSAE10E32
1859FIL	OSPP25F000000440000000000	BPA7	SK-DSAE10P07
1859FIL	OSPP25F000000440000000000	BPEAC8-8F	SK-DSAE10P07V
1861 10 13	OSPP25F000000500000000000	BPEAN4-4F	SK-DSAE2E32
1861 10 17	OSPP25F000000500000000000	BPGF-1N8-8F	SK-DSAE2P04
1861 13 17	OSPP25F000000540000000000	BPGFN16-16F	SK-DSAE2P04V
1861 13 21	OSPP25F000000540000000000	BPGFN20-20F	SK-DSAE2P25
1861 17 21	OSPP25F000000600000000000	BPGFN4-4F	SK-DSAE4E50
1861 21 27	OSPP25F000000600000000000	BPHC12-12F	SK-DSAE4E70
1861 27 34	OSPP25F000000615000000000	BPHC12-12RP	SK-DSAE5P15
1862 13 10	OSPP25F000000615000000000	BPHC16-16F	SK-DSAE5P20

1862 17 10	OSPP25F000000650000000000	BPHC24-24F	SK-DSAEB5P40
1862 17 13	OSPP25F000000650000000000	BPHC32-32F	SK-DSAED10E16
1862 21 13	OSPP25F000000700000000000	BPHC4-4F	SK-DSAED10E40
1862 21 17	OSPP25F000000700000000000	BPHC6-6FV	SK-DSAED10E50
1862 27 21	OSPP25F000000900000001000	BPHC6-6RP	SK-DSBA10Z04
1862 34 27	OSPP25F000000900000001000	BPHC8-8F	SK-DSBA10Z07
1863 13 10	OSPP25F000001000000000000	BPHN12-12F	SK-DSDA10P07
1863 17 10	OSPP25F000001000000000000	BPHN12-12RP	SK-DSDA10P07V
1863 17 13	OSPP25F000001420000000000	BPHN16-16F	SK-DSDA2E04
1863 21 13	OSPP25F000001420000000000	BPHN16-16RP	SK-DSDA2P04
1863 21 17	OSPP25F000001600000000000	BPHN24-24F	SK-DSDA2P04V
1863 27 21	OSPP25F000001600000000000	BPHN32-32F	SK-DSDA2P25
1863 34 27	OSPP25F000001800000000000	BPHN4-4F	SK-DSDA2P40
1864 11 10	OSPP25F000001800000000000	BPHN4-4M	SK-DSDA2Z04
1864 14 13	OSPP25F000001850000000000	BPHN6-6F	SK-DSDA4E50V
1864 18 17	OSPP25F000001850000000000	BPHN6-6M	SK-DSDA5P15
1864 22 21	OSPP25F000001900000000000	BPHN6-6RP	SK-DSDAV2P04
1866 06 08	OSPP25F000001900000000000	BPHN8-8F	SK-DSDB10E16
1866 06 10	OSPP25F000002200000000000	BPHN8-8M	SK-DSDB10E25
1866 06 12	OSPP25F000002200000000000	BPHN8-8RP	SK-DSDB10E25V
1866 08 10	OSPP25F000002920000000000	BPK10	SK-DSDB10E32
1866 08 12	OSPP25F000002920000000000	BPK12	SK-DSDB10E50V
1866 08 16	OSPP25F001002400000000000	BPK14	SK-DSDC2E32
1866 10 12	OSPP25F001002400000000000	BPK4	SK-DSDC2E32V
1866 10 16	OSPP25F100001520000000000	BPK6	SK-DSDC2P25
1866 12 16	OSPP25F100001520000000000	BPK8	SK-DSDC2P40
1867 10 11	OSPP320000000050000000000	BPL10M	SK-DSDC2R
1867 13 14	OSPP320000000050000000000	BPL6M	SK-DSDC5P20
1867 17 18	OSPP320000000050000700000	BPL8M	SK-DSDD2P25
1867 21 22	OSPP320000000050000700000	BPT4440	SK-DSDD2P40
1870 11 11	OSPP320000000050000800000	BRAB10	SK-DSDD2R
1870 14 14	OSPP320000000050000800000	BRAB12	SK-DSDD5P20
1870 18 18	OSPP320000000050000D00000	BRAB16	SK-DSDU10E25
1870 22 22	OSPP320000000050000D00000	BRAB6	SK-DSDU10E32
1871 00 11	OSPP320000000060000000000	BRC6MF	SK-DSDU2P25
1871 00 14	OSPP320000000060000000000	BRC6MH	SK-DSEE5P20
1871 00 18	OSPP320000000080001000000	BRIDGENES/5	SK-DSMA4E50
1871 00 22	OSPP320000000080001000000	BRIDGENPS	SK-DSMB10E25
1872 14 11	OSPP320000000100000000000	BRM04/01	SK-DSMB10E40V
1872 18 11	OSPP320000000100000000000	BRM04/02	SK-DSMB10E63
1872 18 14	OSPP320000000100000200000	BRM04/03	SK-DSMC2E32
1872 22 14	OSPP320000000100000200000	BRM05/01	SK-DSMC5E15
1872 22 18	OSPP320000000115000000000	BRM05/02	SK-DSMD2E32
1873 11 14	OSPP320000000115000000000	BRM06/02	SK-DSMD2E3236
1873 11 18	OSPP320000000125000000000	BRM08/01	SK-DSMG2E32
1873 14 18	OSPP320000000125000000000	BRM10/01	SK-DSMG2P25
1873 14 22	OSPP320000000130000200000	BRM10/02	SK-DSMG5P15
1873 18 22	OSPP320000000130000200000	BRM11/01	SK-DSMG5P20
18-827	OSPP320000000140000000000	BRM12/01	SK-DSMH2P25
18971-16-16	OSPP320000000140000000000	BRM13/01	SK-DSMH5-P20
18A57	OSPP320000000150000000000	BRM14/01	SK-DSMN10E16
18A57	OSPP320000000150000000000	BS032HM4-16991	SK-DSMN10E25
18A76-12-12	OSPP320000000150000200000	BS050HM2-16990	SK-DSMN10E32

18A76-16-16	OSPP320000000150000200000	BS1	SK-DSMN2P25
18B57	OSPP320000000150000300000	BS12SNX	SK-DSMN2R15
18B57	OSPP320000000150000300000	BS16SNX	SK-DSMN5P15
18F76-12-12	OSPP320000000150000K00000	BS16SSNX	SK-DSMN5P20
18F76-16-16	OSPP320000000150000K00000	BS2	SK-DUDB2E15
18KAAK13MPN	OSPP320000000160000000000	BS2/120V	SK-DUDB2E25
18KAAK13MPNS	OSPP320000000160000000000	BS20SNX	SK-DUDB2P15
18KAAK17MPN	OSPP320000000160000200000	BS20SSNX	SK-DUR***L
18KAAK17MPNS_03	OSPP320000000160000200000	BS24SNX	SK-DURE15
18KAAK21MPN	OSPP320000000160000B00000	BS24SSNX	SK-DURE15V
18KAAW13MPNS	OSPP320000000160000B00000	BS25B	SK-DWEE5P15
18KAAW17MPN	OSPP320000000165000G00000	BS25BS	SK-DWLC5P15
18KAAW17MPNS	OSPP320000000165000G00000	BS32SNX	SK-DWLC5P20
18KAAW21MPN	OSPP320000000175000000000	BS32SSNX	SK-DWLC5P40
18KAIW13MPN	OSPP320000000175000000000	BS40SNX	SK-DWLC5P40V
18KAIW13MPNS_01	OSPP320000000175000G00000	BS40SSNX	SK-DWUE5P20
18KAIW13MPNS_02	OSPP320000000175000G00000	BS40VH001AQ	SK-EVSAA061
18KAIW17MPN	OSPP320000000180000000000	BS48SNX	SK-EVSAA101
18KAIW17MPNS_01	OSPP320000000180000000000	BS48SSNX	SK-FADB0E06
18KAIW17MPNS_02	OSPP320000000180001000000	BS5003L02SW	SK-FAHAU8P10
18KAIW21MPN	OSPP320000000180001000000	BS6003L02SW	SK-FAHAU8P25
18KAKK08MPN	OSPP320000000198000000000	BS64SNX	SK-FAHD9E25
18KAKO08MPN	OSPP320000000198000000000	BS64SSNX	SK-FDHD2E32
18KAKO10MPN	OSPP320000000200000000000	BS8003L02SW	SK-FGFCGN
18KATF06MPN	OSPP320000000200000000000	BS80SNX	SK-FM2-20
18KATF08MPN	OSPP320000000020000000F000	BS80SSNX	SK-FM2-V-20
18KATF08MPNS_01	OSPP320000000020000000F000	BS9003L02SW	SK-FM3-N-51
18KATF08MPNS_03	OSPP320000000200000200000	BS9203L02SW	SK-FM3-V-51
18KATF09MPN	OSPP320000000200000200000	BSCH1/2CFX	SK-FM4-V-10
18KATF10MPN	OSPP320000000200000600000	BSCH1/2LG25CFX	SK-FM4VHT
18KATF10MPNS_01	OSPP320000000200000600000	BSCH1/4CFX	SK-FM6-V-12
18KATF10MPNS_02	OSPP320000000200000A00000	BSCH1/8CFX	SK-FM6-V-25
18KATF13MPN	OSPP320000000200000A00000	BSCH10X1CFX	SK-FM6-V-40
18KEAK13BPN	OSPP320000000200000F00000	BSCH11/2CFX	SK-GFG2
18KEAK17BPN	OSPP320000000200000F00000	BSCH11/4CFX	SK-GFG2FPM
18KEAK21BPN	OSPP320000000200000F0F000	BSCH12X1.5CFX	SK-GMDC600-V
18KEAK21BPN	OSPP320000000200000F0F000	BSCH14X1.5CFX	SK-H06PSB-994
18KEAW13BPNS_01	OSPP320000000200000G00000	BSCH16X1.5CFX	SKHSM325-871
18KEAW21BPN	OSPP320000000200000G00000	BSCH18X1.5CFX	SK-HV--A06-N
18KEIW13BPN	OSPP320000000200000K00000	BSCH1CFX	SKI12
18KEIW13BPNS_01	OSPP320000000200000K00000	BSCH22X1.5CFX	SK-KADC5P40
18KEIW17BPN	OSPP320000000200001000000	BSCH26X1.5CFX	SK-KBDB10E32
18KEIW21BPN	OSPP320000000200001000000	BSCH27X2CFX	SK-KBDC5P40DDA7
18KETF06BPN	OSPP320000000200002000000	BSCH3/4CFX	SK-KBDG2E32DDA
18KETF08BPN	OSPP320000000200002000000	BSCH3/8CFX	SK-KBDG2E32DW
18KETF08BPN	OSPP320000000200003000000	BSCH33X2CFX	SK-KBDH5P20
18KETF09BPN	OSPP320000000200003000000	BST-1	SK-KBDK2E32ZEA
18KETF10BPN	OSPP320000000215000000000	BST-10	SK-KBDK4E50
18KETF13BPN	OSPP320000000215000000000	BST-2	SK-KBDK4E70
18N76-12-12	OSPP320000000220000200000	BST-3	SK-LCM3V10
18N76-16-16	OSPP320000000220000200000	BST-4	SKM06X1.571X
18P102QBF1MG121	OSPP320000000220003000000	BST-6	SKM08X1.571X
18P102QBM3MG081	OSPP320000000220003000000	BST-8	SKM08X2X

18P102QBM3MG121	OSPP32000000022500020000	BST-N1	SKM10X271X
18P102QBT1MG081	OSPP32000000022500020000	BST-N10	SKM12X1.571X
18P102QBT1MG121	OSPP32000000023000000000	BST-N2	SKO06X1.5SA371
18P102QHBM3MG122	OSPP32000000023000000000	BST-N3	SKO08X1.5SA271
18P102QHBT1MG122	OSPP32000000023000100000	BST-N4	SKO10X1.5SA771
18P102QHVT1MG122	OSPP32000000023000100000	BST-N6	SKO10X2SA671
18P105QBF1MG121	OSPP32000000024000000000	BST-N8	SKO12X1.5RBSA171
18P105QBF2MG121	OSPP32000000024000000000	BT080	SKO12X1.5SA571
18P105QBM3MG121	OSPP32000000025000000000	BT080	SKO12X1ORBCN
18P105QBNMG121	OSPP32000000025000000000	BT125	SKO14X2SA671
18P105QBPMG121	OSPP32000000025000000F000	BT125	SKO14X2SA771
18P105QBT1KG121	OSPP32000000025000000F000	BT466259U001	SKO16X1.5ORBCN
18P105QBT1MG121	OSPP32000000025000020000	BT466259U002	SKO16X2SA1071
18P105QHBM3MG122	OSPP32000000025000020000	BT469833	SKO16X2SA971
18P105QHBT1MG122	OSPP32000000025000030000	BTC050	SKO20X2.5RBSA271
18P105QVM3MG122	OSPP32000000025000030000	BTC050	SKO20X2.5SA471
18P110QBF1MG121	OSPP32000000025000040000	BTC080/100	SKO20X2.5SA671
18P110QBF2MG121	OSPP32000000025000040000	BTC080/100	SKO25X2.5RBSA171
18P110QBF3MG121	OSPP320000000250000G00000	BTC125	SKO25X2.5SA471
18P110QBM3KG121	OSPP320000000250000G00000	BTC125	SKO25X2.5SA671
18P110QBM3KS121	OSPP320000000250000K00000	BT-M73-4HB	SKO25X2SA7CN
18P110QBM3MG081	OSPP320000000250000K00000	BT-M73-6HB	SKO30X2.5SA371
18P110QBM3MG121	OSPP320000000250000L00000	BT-M73-PLUG	SKO30X2.5SA671
18P110QBNMG121	OSPP320000000250000L00000	BT-M74-4HB	SKO30X2SA9CN
18P110QBPKG121	OSPP32000000025000100000	BT-M74-6HB	SKO30X3RBSA371
18P110QBPMG121	OSPP32000000025000100000	BT-M74-PLUG	SKO30X3SA571
18P110QBT1KG121	OSPP32000000025000100F000	BTMB10	SKO30X3SA771
18P110QBT1MG121	OSPP32000000025000100F000	BTMB12	SKO30X4SA471
18P110QHBM3MG122	OSPP320000000250020B00000	BTMB16	SKO38X2.5SA671
18P110QHBNXG122	OSPP320000000250020B00000	BTMB18	SKO38X2.5SA6CN
18P110QHBT1MG121	OSPP320000000256000K00000	BTMB22	SKO38X2.5SA871
18P110QVT1MG121	OSPP320000000256000K00000	BTMB4	SKO38X4SA471
18P120QBM3KG121	OSPP32000000026000000000	BTMB6	SKO38X4SA971
18P120QBM3MG081	OSPP32000000026000000000	BTMB8	SKOR38/25SA671
18P120QBM3MG121	OSPP320000000265000K00000	BTV4B4P2-SOGTG	SKOR38/25SA671X
18P120QBNKG121	OSPP320000000265000K00000	BTV4F2L1-WO	SK-PADM0275.400
18P120QBNMG121	OSPP320000000268000G00000	BTV4F2L4	SK-PADS0826.300
18P120QBPKG121	OSPP320000000268000G00000	BTV4F2L4-WO	SK-PADS0908.300
18P120QBT1KG121	OSPP32000000027000000000	BTV4S4P1	SK-PADS0939.300
18P120QBT1MG081	OSPP32000000027000000000	BUS02/01	SK-PADS0939.400
18P120QBT1MG121	OSPP32000000027000200000	BUS03/01	SK-PADS1117.400
18P120QHBNXG122	OSPP32000000027000200000	BUS04/01	SK-PADS1142.700
18P120QHBPMG122	OSPP32000000028000000000	BUS07/01	SK-PADS1331.400
18P120QVM3MG121	OSPP32000000028000000000	BUS08/01	SK-PADS1341.300
18P202QBM3MG121	OSPP32000000029500000000	BUS10/01	SK-PADS1536.300
18P202QBT1MG121	OSPP32000000029500000000	BUZ06L71X	SK-PADS1537.300
18P202QHBM3MG122	OSPP32000000030000000000	BUZ06LCFX	SK-PADS1566.300
18P202QHBPMG122	OSPP32000000030000000000	BUZ06LMSX	SK-PADS1876.300
18P202QHBT1MG122	OSPP32000000030000000F000	BUZ06LX	SK-PADZ1356.400
18P205QBF1MG121	OSPP32000000030000000F000	BUZ08L71X	SK-PADZ1498.400
18P205QBM3KG121	OSPP32000000030000200000	BUZ08LCFX	SK-PADZ1883.300
18P205QBM3MG121	OSPP32000000030000200000	BUZ08LMSX	SK-PADZ1930.300
18P205QBNMG121	OSPP32000000030000600000	BUZ10L71X	SK-PADZ2008.300

18P205QBPMG121	OSPP32000000300000600000	BUZ10LCFX	SK-PADZ2294.300
18P205QBT1MG121	OSPP32000000300000800000	BUZ12L71X	SK-PADZ2303.300
18P205QHBT1MG122	OSPP32000000300000800000	BUZ12LCFX	SK-PADZ2304.300
18P210QBF1MG121	OSPP320000000300000G00000	BUZ14S71X	SK-PADZ2311.300
18P210QBF3MG121	OSPP320000000300000G00000	BUZ14SCFX	SK-PADZ2436.300
18P210QBM3KG121	OSPP320000000300000K00000	BUZ15L71X	SK-PDSA4025
18P210QBM3MF121	OSPP320000000300000K00000	BUZ15LCFX	SK-PE10M-N10
18P210QBM3MG121	OSPP32000000300001000000	BUZ16S71X	SK-PE10M-V10
18P210QBNKG121	OSPP32000000300001000000	BUZ16SCFX	SK-PR10MN
18P210QBPKG121	OSPP32000000320000000000	BUZ16SX	SK-PR25MN
18P210QBPMG121	OSPP32000000320000000000	BUZ18L71X	SK-PR25MV
18P210QBT1KG121	OSPP32000000320000400000	BUZ18LCFX	SK-PRDM2..
18P210QBT1MG121	OSPP32000000320000400000	BUZ20S71X	SK-PRDM2..V
18P210QHBM3MG122	OSPP32000000032000060F000	BUZ20SCFX	SK-PRDM2BB
18P210QHBNXG122	OSPP32000000032000060F000	BUZ20SX	SK-PRDM3-V-10
18P210QHBT1MG122	OSPP320000000320000G00000	BUZ22L71X	SK-PRM2-11
18P210QHBT1MH122	OSPP320000000320000G00000	BUZ22LCFVOLX	SK-PRM2-V-11
18P210QVM3MG121	OSPP320000000320000G0F000	BUZ22LCFX	SK-PRM3-11
18P210QVT1MG121	OSPP320000000320000G0F000	BUZ25S71X	SK-PRM3-V-11
18P220QBM3KG121	OSPP32000000320001000000	BUZ25SCFX	SK-PRM3-V-30
18P220QBM3MG121	OSPP32000000320001000000	BUZ28L71X	SK-PRM4-10
18P220QBNMG121	OSPP32000000325000200000	BUZ28LCFX	SK-PRM4-V-10
18P220QBT1MG121	OSPP32000000325000200000	BUZ30S71X	SK-PRM6-11
18SFAK13SXN	OSPP32000000330000000000	BUZ30SCFX	SK-PRM6-V-11
18SFAK13SXNS	OSPP32000000330000000000	BUZ35L71X	SK-PRM6-V-25
18SFAK17SXN	OSPP320000000330000A00000	BUZ35LCFX	SK-PRM6-V-33
18SFAK17SXNS_01	OSPP320000000330000A00000	BUZ38S71X	SK-PSB-FPM
18SFAW13SXN	OSPP32000000350000000000	BUZ38SCFX	SK-PSB-NBR
18SFAW13SXNS_01	OSPP32000000350000000000	BUZ42L71X	SK-PVAC1P..NS20
18SFAW17SXN	OSPP32000000350000006000	BUZ42LCFX	SK-PVACN
18SFAW17SXNS_01	OSPP32000000350000006000	BUZM04LLSA131BOFF71	SK-PVACV
18SFIW13SXN	OSPP32000000350000200000	BUZM06L31BOFF71	SK-PVBG1N142
18SFIW13SXNS	OSPP32000000350000200000	BUZM06L71	SK-PVBG1N145
18SFIW17SXN	OSPP32000000350000400000	BUZM06LCF	SK-PVBG1P742
18SFIW17SXNS	OSPP32000000350000400000	BUZM06S71	SK-PVBG1V142
18SFTF06SXN	OSPP32000000350000800000	BUZM06SCF	SK-PVBG1V145
18SFTF06SXNS	OSPP32000000350000800000	BUZM08L71	SK-PVBG1W142
18SFTF08SXN	OSPP32000000356003003000	BUZM08LCF	SK-PVBG1W145
18SFTF08SXNS	OSPP32000000356003003000	BUZM08LLCF	SK-PVBG1W342
18SFTF09SXN	OSPP32000000360001000000	BUZM08S71	SK-PVBG1WDRB42
18SFTF10SXN	OSPP32000000360001000000	BUZM08SCF	SK-PVBG1WDRN42
18SFTF10SXNS	OSPP32000000360010000000	BUZM10L71	SK-PVBG1WDRW42
18SFTF13SXN	OSPP32000000360010000000	BUZM10LCF	SK-PVBG2N142
1900 BEUV	OSPP32000000363000000000	BUZM10S71	SK-PVBG2N145
1900 BEUV	OSPP32000000363000000000	BUZM10SCF	SK-PVBG2N342
1900 NBE	OSPP32000000365001000000	BUZM12L71	SK-PVBG2P145
1900 NBE	OSPP32000000365001000000	BUZM12LCF	SK-PVBG2V142
1900 NCE	OSPP32000000370000000000	BUZM12S71	SK-PVBG2V145
1900 NCE	OSPP32000000370000000000	BUZM12SCF	SK-PVBG2W142
190-006020-001	OSPP32000000370000200000	BUZM15L71	SK-PVBG2W145
190-007024-002	OSPP32000000370000200000	BUZM15LCF	SK-PVBG2W342
190-007057-001	OSPP32000000370000400000	BUZM16S71	SK-PVBG2WDRN40
190-007058-001	OSPP32000000370000400000	BUZM16SCF	SK-PVBG2WDRW40

190-008246-001	OSPP320000000374000000000	BUZM18L71	SK-PVBG3N141
190-009021-001	OSPP320000000374000000000	BUZM18LCF	SK-PVBG3N142
190-009029-001	OSPP320000000375000G00000	BUZM20S71	SK-PVBG3N142X5823
190-009151-001	OSPP320000000375000G00000	BUZM20SCF	SK-PVBG3N142X5861
190-550013	OSPP320000000380000000000	BUZM22L71	SK-PVBG3N143
191-000100-009	OSPP320000000380000000000	BUZM22LCF	SK-PVBG3N742
191-000100-208	OSPP320000000380000200000	BUZM25S71	SK-PVBG3P142
191-000112-010	OSPP320000000380000200000	BUZM25SCF	SK-PVBG3V142
191-000112-012	OSPP320000000380000F00000	BUZM28L71	SK-PVBG3W142
191-000112-405	OSPP320000000380000F00000	BUZM28LCF	SK-PVBG3W143
191-000115-012	OSPP320000000380000K00000	BUZM30S71	SK-PVBG3WDRN41
191-000214-002	OSPP320000000380000K00000	BUZM30SCF	SK-PVBG3WDRW41
19124-103	OSPP320000000395000200000	BUZM35L71	SK-PVBG4N140
19124-103	OSPP320000000395000200000	BUZM35LCF	SK-PVBG4N141
1913P0002	OSPP320000000395000400000	BUZM38S71	SK-PVBG4N142
19146-12-12	OSPP320000000395000400000	BUZM38SCF	SK-PVBG4N144
19146-16-16	OSPP320000000400000000000	BUZM42L71	SK-PVBG4N342
19146-4-4	OSPP320000000400000000000	BUZM42LCF	SK-PVBG4V142
19146-4-5	OSPP32000000040000000F000	BV06/1801X	SK-PVBG4W142
19146-4-6	OSPP32000000040000000F000	BV06/1802X	SK-PVBG4W144X5835
19146-6-4	OSPP320000000400000200000	BV06/1803X	SK-PVBG4WDRN41
19146-6-5	OSPP320000000400000200000	BV06/1804X	SK-PVBG4WDRV41
19146-6-6	OSPP320000000400000300000	BV06/1805X	SK-PVBG5N142
19146-6-8	OSPP320000000400000300000	BV06/1806X	SK-PVBG5N146
19146-8-6	OSPP320000000400000400000	BV06/1807X	SK-PVBG5N342
19146-8-8	OSPP320000000400000400000	BV06/1808KPLX	SK-PVBG5V146
19148-12-10	OSPP320000000400000D00000	BV06/1809X	SK-PVBG5W142
19148-12-12	OSPP320000000400000D00000	BV06/1810X	SK-PVBG5WDRN42
19148-16-16	OSPP320000000400000G00000	BV06/1811X	SK-PVBG6N146
19148-4-4	OSPP320000000400000G00000	BV06/1812X	SK-PVCF/P/RV11
19148-4-5	OSPP320000000400000K00000	BV06/18KPLX	SK-PVCMN
19148-4-6	OSPP320000000400000K00000	BV06/18SA1KPLX	SK-PVCMV
19148-6-4	OSPP320000000400000K00M00	BV20/2501X	SK-PVCN
19148-6-5	OSPP320000000400000K00M00	BV20/2502X	SK-PVCV
19148-6-6	OSPP320000000400001000000	BV20/2503X	SK-PVMCN
19148-6-8	OSPP320000000400001000000	BV20/2504X	SK-R10M
19148-8-6	OSPP32000000040000100F000	BV20/2505X	SK-R10MN40
19148-8-8	OSPP32000000040000100F000	BV20/2506KPLX	SK-R10RN40
1915FIL	OSPP320000000400001M00000	BV20/2506X	SK-R10RV
1915FIL	OSPP320000000400001M00000	BV20/2507X	SK-R16EN
1916FIL	OSPP320000000400003000000	BV20/2508X	SK-R25EN
1916FIL	OSPP320000000400003000000	BV20/2509X	SK-R25EV
1917FIL	OSPP320000000400060D00000	BV20/2510X	SK-R25MN
1917FIL	OSPP320000000400060D00000	BV20/25KPLX	SK-R25MV
1918FIL	OSPP320000000400100000000	BV3D20B1SS1NA	SK-R25RN
1918FIL	OSPP320000000400100000000	BVA36-16	SK-R25RN40
191PX-4-04BF	OSPP320000000405200G00000	BVA36-16	SK-R25RV
19226-12-12	OSPP320000000405200G00000	BVA48-16	SK-R32EN
19226-16-16	OSPP320000000410000000000	BVA48-16	SK-R32RN40
19226-4-4	OSPP320000000410000000000	BVA60-16	SK-R63EN
19226-6-6	OSPP320000000410000D00000	BVA60-16	SK-RDM2ATBT-N
19226-8-8	OSPP320000000410000D00000	BVAH20BSS1N	SK-RDM2ATBT-V
19243-10-10	OSPP320000000414000200000	BVAH20BSS1NA	SK-RDM2-V

19243-10-10C	OSPP320000000414000200000	BVAH20BSS1NK	SK-RDM3-V
19243-10-8	OSPP320000000420000000000	BVAH24BSS1N	SK-RE06MTN
19243-12-10	OSPP320000000420000000000	BVAH24BSS1NA	SK-RE06MTV
19243-12-12	OSPP320000000042000000F000	BVAH24BSS1NK	SK-RE06MWN
19243-12-12C	OSPP320000000042000000F000	BVAH24USS1NA	SK-RE06MWV
19243-16-16	OSPP320000000420000200000	BVAH32BSS1NA	SK-RE10MN
19243-16-16C	OSPP320000000420000200000	BVAH32USS1NK	SK-RE25MN
19243-20-20C	OSPP320000000420000F0F000	BVAL06BSS2NA	SK-RE25MN40
19243-4-4C	OSPP320000000420000F0F000	BVAL40BSS2NK	SK-RE50EV
19243-6-6	OSPP320000000425000000000	BVAL40USS2NK	SKRGHSM500-539
19243-6-6C	OSPP320000000425000000000	BVAL48BSS2NK	SK-RM2-11
19243-8-6	OSPP320000000425000200000	BVE21SBXDPX	SK-RM2-V-11
19243-8-8	OSPP320000000425000200000	BVE21SBXFVX	SK-RM3-11
19243-8-8C	OSPP320000000425000G00000	BVE35KAXMPX	SK-RM3-V-11
19246-10-10	OSPP320000000425000G00000	BVE3-R-G24	SK-RM4-10
19246-10-12	OSPP320000000430000000000	BVE3-S-G24	SK-RM4-V-10
19246-10-8	OSPP320000000430000000000	BVE3Z-X24	SK-RM6-V-11
19246-12-10	OSPP320000000430000F00000	BVE48SBXFVX	SK-RPDM-20
19246-12-12	OSPP320000000430000F00000	BVEAC6-6F	SK-RPVDC1N
19246-12-8	OSPP320000000430000F0F000	BVEAC8-8ME	SK-RS10MN
19246-16-12	OSPP320000000430000F0F000	BVG4-1.1/2C	SK-RS10RN40
19246-16-16	OSPP320000000430003000000	BVG4-1.1/2L	SK-RS16EV
19246-20-20	OSPP320000000430003000000	BVG4-1.1/2LOCK	SK-RS25EN
19246-2-4	OSPP320000000440000B00000	BVG4-1.1/4C	SK-RS25EV
19246-4-4	OSPP320000000440000B00000	BVG4-1.1/4L	SK-RS25MN
19246-4-5	OSPP320000000450000000000	BVG4-1/2C	SK-RS25MV
19246-4-6	OSPP320000000450000000000	BVG4-1/2L	SK-RS25RN15/38
19246-6-4	OSPP320000000450000200000	BVG4-1/2LOCK	SK-RS25RN40
19246-6-5	OSPP320000000450000200000	BVG4-1/4C	SK-RS40EN
19246-6-6	OSPP320000000450000600000	BVG4-1/4L	SK-RS50EN
19246-6-8	OSPP320000000450000600000	BVG4-1C	SKS06X1.5SA171X
19246-8-10	OSPP320000000450000F00000	BVG4-1L	SKS08X1.5SA171X
19246-8-12	OSPP320000000450000F00000	BVG4-1LOCK	SKS10X1.5SA171X
19246-8-4	OSPP320000000450000G00000	BVG4-2C	SKS12X1.5SA171X
19246-8-6	OSPP320000000450000G00000	BVG4-2L	SKS14X2SA171X
19246-8-8	OSPP320000000450001000000	BVG4-2LOCK	SKS16X2SA171X
19248-10-10	OSPP320000000450001000000	BVG4-3/4C	SKS20X2.5SA171X
19248-10-12	OSPP320000000456003003000	BVG4-3/4L	SKS25X2.5SA171X
19248-10-8	OSPP320000000456003003000	BVG4-3/8C	SKS30X3SA271X
19248-12-10	OSPP320000000460000000000	BVG4-3/8L	SKS38X2.5SA171X
19248-12-12	OSPP320000000460000000000	BVG4P-1/2LOCK	SK-SPRA11P15
19248-12-12C	OSPP320000000460000G00000	BVG4P-1/4LOCK	SK-SPRA2E32V
19248-12-8	OSPP320000000460000G00000	BVG4P-1LOCK	SK-SPRA2V25
19248-16-12	OSPP320000000460003003000	BVG4P-3/4LOCK	SK-SPRA2W25V
19248-16-16	OSPP320000000460003003000	BVG4P-3/8LOCK	SK-SPRA4E50
19248-20-20	OSPP320000000472000000000	BVGF-1C8-8F	SK-SPRA4E50V
19248-20-20C	OSPP320000000472000000000	BVGFC16-16F	SK-SPRA4E70
19248-2-4	OSPP320000000475000000000	BVGFC20-20F	SK-SPRA5E15
19248-24-24	OSPP320000000475000000000	BVGFC4-4F	SK-SPRA7E10
19248-24-24C	OSPP320000000476000000000	BVGT4-1.1/4L	SK-SPRB0E15V
19248-32-32	OSPP320000000476000000000	BVGT4-1/2C	SK-SPRB0E32
19248-32-32C	OSPP320000000480000000000	BVGT4-1/2L	SK-SPRB10E16
19248-4-4	OSPP320000000480000000000	BVGT4-1/4C	SK-SPRB10E25

19248-4-4C	OSPP320000000480000200000	BVGT4-1/4L	SK-SPRB10E32
19248-4-5	OSPP320000000480000200000	BVGT4-1C	SK-SPRB10E40
19248-4-6	OSPP320000000490000000000	BVGT4-1L	SK-SPRB10E50
19248-6-4	OSPP320000000490000000000	BVGT4-3/4C	SK-SPRB10E63
19248-6-5	OSPP320000000500000000000	BVGT4-3/4L	SK-SPRB9E15
19248-6-6	OSPP320000000500000000000	BVGT4-3/8C	SK-SPRC2E32
19248-6-6C	OSPP320000000050000000F000	BVGT4-3/8L	SK-SPRC2E32V
19248-6-8	OSPP320000000050000000F000	BVHC12-12F	SK-SPRC2P25V
19248-8-10	OSPP320000000500000200000	BVHC12-12FV	SK-SPRC2P40
19248-8-12	OSPP320000000500000200000	BVHC12-12RP	SK-SPRC5P20
19248-8-4	OSPP320000000500000600000	BVHC12-12RPV	SK-SPRD2P25
19248-8-6	OSPP320000000500000600000	BVHC16-16F	SK-SPRD2P40
19248-8-8	OSPP320000000500000B00000	BVHC16-16M	SK-SPV/ZB0E06
19248-8-8C	OSPP320000000500000B00000	BVHC16-16RP	SK-SPV/ZB0E10
19254-4-4	OSPP320000000500000F00000	BVHC16-16RPV	SK-SPVADE10V
19255-10-8	OSPP320000000500000F00000	BVHC24-24F	SK-SPZABE10
19255-12-12	OSPP320000000500000G00000	BVHC24-24FV	SK-SPZAD0E25
19255-16-16	OSPP320000000500000G00000	BVHC32-32F	SK-SPZADE10
19255-4-3	OSPP320000000500000G0F000	BVHC4-4F	SK-SPZB10E16
19255-4-4	OSPP320000000500000G0F000	BVHC4-4RP	SK-SPZB10E32
19255-4-4C	OSPP320000000500000K00000	BVHC6-6F	SK-SPZBE06
19255-4-5	OSPP320000000500000K00000	BVHC6-6FV	SK-SPZBE10E16
19255-6-4	OSPP320000000500000L00000	BVHC6-6RPV	SK-SPZBE10E16V
19255-6-4C	OSPP320000000500000L00000	BVHC8-8F	SK-SPZBE10E25
19255-6-5	OSPP320000000500001000000	BVHC8-8FSL	SK-SPZBE10E25V
19255-6-6	OSPP320000000500001000000	BVHC8-8M	SK-SPZBE10E32V
19255-6-6C	OSPP320000000500003000000	BVHC8-8RP	SK-SSRAE04
19255-8-6	OSPP320000000500003000000	BVHC8-8RPV	SK-SSRB0E06
19255-8-8	OSPP320000000500300600000	BVHC8-SPK	SK-SSRB0E06V
19255-8-8C	OSPP320000000500300600000	BVHH12NSS1NA	SK-SSRB0E10
19256-12-12	OSPP320000000505001000000	BVHH12SSS1NA	SK-SSRB0E10V
19256-16-16	OSPP320000000505001000000	BVHH12SSS1NK	SK-SVB8078
19256-4-3	OSPP320000000506003003000	BVHH20SSS1NK	SK-SVLA10P07
19256-4-4	OSPP320000000506003003000	BVHN12-12F	SK-SVLB10E16
19256-4-6	OSPP320000000510000000000	BVHN12-12FV	SK-SVLB10E16V
19256-6-5	OSPP320000000510000000000	BVHN12-12M	SK-SVLB10E25
19256-6-6	OSPP320000000515000000000	BVHN12-12RP	SK-SVLB10E32
19256-8-6	OSPP320000000515000000000	BVHN12-12RPV	SK-SVLB10E40V
19256-8-8	OSPP320000000515010000000	BVHN16-16F	SK-SVLB10E50
19257-2-2	OSPP320000000515010000000	BVHN16-16RPV	SK-SVLC2E32
19258-16-16	OSPP320000000515010000M00	BVHN24-24FV	SK-SVLC2P40
19258-4-4	OSPP320000000515010000M00	BVHN24-24M	SK-SVLC4E50
19258-6-6	OSPP320000000520000000000	BVHN32-32F	SK-SVLC-4E50
19258-8-8	OSPP320000000520000000000	BVHN4-4F	SK-SVLC-4E70
19270-10-10	OSPP320000000520000G00000	BVHN4-4M	SK-SVLC5E15
19270-10-10C	OSPP320000000520000G00000	BVHN4-4RP	SK-SVLCV2P04
19270-10-8	OSPP320000000525000300000	BVHN6-6F	SK-SVLD2P25N
19270-12-10	OSPP320000000525000300000	BVHN6-6FV	SK-SVLD5P20
19270-12-12	OSPP320000000530000000000	BVHN6-6RPV	SK-SVLE5P10V
19270-12-12C	OSPP320000000530000000000	BVHN8-8F	SK-SVLE5P25V
19270-12-8	OSPP320000000530000200000	BVHN8-8M	SK-SVLE5P32V
19270-16-12	OSPP320000000530000200000	BVHN8-8RP	SK-SVMD2E32
19270-16-16	OSPP320000000530001000000	BVHN8-8RPV	SK-SVMD4E50V

19270-16-16C	OSPP320000000530001000000	BVHP04BSS1N	SK-SVMH2P25
19270-6-6	OSPP320000000538000000000	BVHP04BSS1NA	SK-SVPB10E16
19270-6-6C	OSPP320000000538000000000	BVHP04BSS1ND	SK-SVPB10E25
19270-6-8	OSPP320000000540000000000	BVHP06BSS1N	SK-SVPB10E32
19270-8-6	OSPP320000000540000000000	BVHP06BSS1NA	SK-SVPN10E25V
19270-8-8	OSPP320000000054000000F000	BVHP06SSS1N	SK-SVWD2E32
19270-8-8C	OSPP320000000054000000F000	BVHP06USS1NA	SK-SVWD4E50
19271-10-10	OSPP320000000540000G00000	BVHP08BSS1N	SK-SVWD4E70
19271-12-12	OSPP320000000540000G00000	BVHP08BSS1NA	SK-SVWN4E50
19271-16-16	OSPP320000000540001000000	BVHP08NSS1NA	SK-SWDA5P20
19271-20-20	OSPP320000000540001000000	BVHP08SSS1NA	SK-SWLB4E50V
19271-24-24	OSPP320000000550000000000	BVHP08USS1NA	SK-TDA016EN-20
19271-32-32	OSPP320000000550000000000	BVHP12BSS1N	SK-TDA016EV
19271-8-8	OSPP320000000550000200000	BVHP12BSS1NA	SK-TDA025EN-20
19273-12-12	OSPP320000000550000200000	BVHP12BSS1NK	SK-TDA032EN-20
19273-16-16	OSPP320000000550000600000	BVHP12SSS1NA	SK-TDA040EN-20
19273-20-20	OSPP320000000550000600000	BVHP12USS1NK	SK-TDA050EN-20
19273-24-24	OSPP320000000550000700000	BVHP16BSS1N	SK-TDA063EN-20
19273-32-32	OSPP320000000550000700000	BVHP16BSS1NA	SK-TDA080EN-20
19278-12-12	OSPP320000000550000F00000	BVHP16BSS1ND	SK-TDAC2E32
19278-16-16	OSPP320000000550000F00000	BVHP16BSS1NK	SK-TDAC2E32V
19278-20-20	OSPP320000000550000F0F000	BVHP16BSS2VA	SK-TDAC4E50
19278-24-24	OSPP320000000550000F0F000	BVHP16SSS1NA	SK-TDAC4E50V
1928X-4-025	OSPP320000000550000G00000	BVHPLK-1	SK-TDAC4E70
1928X-4-04	OSPP320000000550000G00000	BVHPLK-2	SK-TDAC4E70V
1928X-4-04C	OSPP320000000550000K00000	BVHPLK-3	SK-TDAC4P70V
1928X-6-06	OSPP320000000550000K00000	BVP06/1806X	SK-TDAD10E100
1928X-6-06C	OSPP320000000550001000000	BVP06/1808X	SK-TDAD10E16
1928X-8-06	OSPP320000000550001000000	BVP06/1810X	SK-TDAD10E16V
1928X-8-08	OSPP320000000550010000000	BVP06/1812X	SK-TDAD10E25
1928X-8-08C	OSPP320000000550010000000	BVP06/1814X	SK-TDAD10E25V
19291N-12-12C-RD	OSPP320000000550100200000	BVP06/1815X	SK-TDAD10E32
19291N-12-12-RD	OSPP320000000550100200000	BVP06/1816X	SK-TDAD10E32V
19291N-12-16C-RD	OSPP320000000550100G00000	BVP06/18ANSCHLX	SK-TDAD10E40
19291N-4-4C-RD	OSPP320000000550100G00000	BZ 10-SS	SK-TDAD10E40V
19291N-4-4-RD	OSPP320000000560000000000	BZ 12-SS	SK-TDAD10E50
19291N-4-5-RD	OSPP320000000560000000000	BZ 16-SS	SK-TDAD10E50V
19291N-6-6C-RD	OSPP320000000560000G00000	BZ 3-SS	SK-TDAD10E63
19291N-6-6-RD	OSPP320000000560000G00000	BZ 6-SS	SK-TDAD10E63V
19291N-6-8C-RD	OSPP320000000056000100F000	BZ 8-SS	SK-TDAD10E80
19291N-6-8-RD	OSPP320000000056000100F000	C/2F	SK-TDAD4E50
19291N-8-10-RD	OSPP320000000568000000000	C/2F	SK-TDADV10P04
1929X-6-06	OSPP320000000568000000000	C/6F	SK-TDAE10E100
1929X-8-08	OSPP320000000570000000000	C/6F	SK-TDAE10E50
192BL-8-08	OSPP320000000570000000000	C/6MP	SK-TDAE10E50V
192BS-4-04	OSPP320000000057000000F000	C/6MP	SK-TDAE10E63
192BS-8-08	OSPP320000000057000000F000	C/SB16	SK-TDAE10E63V
192BS-8-08C	OSPP320000000570001000000	C/SB16	SK-TDAE10E80
192EH-08-08	OSPP320000000570001000000	C/SB20	SK-TDAE2P25
192EH-12-12	OSPP320000000576003003000	C/SB20	SK-TDAE2P25V
192EH-16-16	OSPP320000000576003003000	C/SB25	SK-TDAE2P40
192EH-20-20	OSPP320000000580000000000	C/SB25	SK-TDAE2R
192EX-4-025	OSPP320000000580000000000	C016AA00N	SK-TDAE5P20

192KX-4-04W	OSPP320000000580000200000	C016AA08N	SK-TDAE5P20V
192KX-6-05W	OSPP320000000580000200000	C016AA08V	SK-TDAEC10E100
192KX-6-06W	OSPP320000000590000000000	C016AA09N	SK-TDAEC10E50
192KX-8-08W	OSPP320000000590000000000	C016AA10N	SK-TDAEC10E63
192KY-6-05	OSPP320000000600000000000	C016AA11N	SK-TDAEC10E80
192LX-16-12	OSPP320000000600000000000	C016AA12N	SK-TDAEC10E80V
192LX-16-12C	OSPP32000000060000000F000	C016AA12V	SK-TDL025EN10
192LX-20-16	OSPP32000000060000000F000	C016AA13N	SK-TDL040EN
192LX-4-03	OSPP320000000600000200000	C016AA15N	SK-TDL040ENX878
192LX-6-05	OSPP320000000600000200000	C016AA18N	SK-TDL040EV
192LX-6-05SW24	OSPP320000000600000600000	C016AA20N	SK-TDL050EN
192LX-8-06	OSPP320000000600000600000	C016AA99N	SK-TDL050EN41
192LX-8-08	OSPP320000000600000B00000	C016AA99V	SK-TDL050ENX878
192LX-8-08C	OSPP320000000600000B00000	C016BN00N	SK-TDL050EV41
192NX-12-10	OSPP320000000600000B0F000	C016BN08N	SK-TDL063EN
192NX-12-12	OSPP320000000600000B0F000	C016BN08V	SK-TDL063ENX878
192NX-16-12	OSPP320000000600000G00000	C016BN10N	SK-TDL063EV
192NX-16-16	OSPP320000000600000G00000	C016BN10V	SK-TDL080EN
192NX-20-16	OSPP320000000600000K00000	C016BN12N	SK-TDL080EN41
192NX-4-04	OSPP320000000600000K00000	C016BN12V	SK-TDL080EV41
192NX-4-04C	OSPP320000000600000K00M00	C016BN15N	SK-TDL100EN
192NX-6-05	OSPP320000000600000K00M00	C016BN18N	SK-TDL100EN38
192NX-6-06	OSPP320000000600001000000	C016BN20N	SK-TDL100EV
192NX-6-06C	OSPP320000000600001000000	C016BN25N	SK-TDP050EN
192NX-8-06	OSPP320000000600003000000	C016BN99N	SK-TDP050EV
192NX-8-08	OSPP320000000600003000000	C016BN99V	SK-TDP080EN
192NX-8-08C	OSPP320000000600006000000	C016BS08N	SK-TEAB4E70V
192PC-12-10	OSPP320000000600006000000	C016BY10N	SK-TEAC4E100V
192PC-12-12	OSPP320000000600100200000	C016BY99N	SK-TEAC4E70V
192PC-16-16	OSPP320000000600100200000	C016CA00000000N	SK-TEACV4P04V
192PC-4-04	OSPP320000000600100K00000	C016CA00000899N	SK-TEAD4E50V
192PC-6-05	OSPP320000000600100K00000	C016CA00001099N	SK-TEAE10E100V
192PC-6-06	OSPP320000000600260B00000	C016CA00001215N	SK-TEAE10E25
192PC-8-06	OSPP320000000600260B00000	C016CA00069999N	SK-TEAE10E25V
192PC-8-08	OSPP320000000605000G00000	C016CA00080099N	SK-TEAE10E32
192PX-12-10	OSPP320000000605000G00000	C016CA00080808N	SK-TEAE10E40
192PX-12-12	OSPP320000000610001A00000	C016CA00080817N	SK-TEAE10E50
192PX-16-12	OSPP320000000610001A00000	C016CA00080899N	SK-TEAE10E50V
192PX-16-16	OSPP320000000615000000000	C016CA00081099N	SK-TEAE10E63
192PX-2-02	OSPP320000000615000000000	C016CA00082099N	SK-TEAE10E63V
192PX-2-03	OSPP320000000620000000000	C016CA00089999N	SK-TEAE10E80
192PX-4-03	OSPP320000000620000000000	C016CA00100000N	SK-TEAN10E100
192PX-4-04	OSPP320000000625000000000	C016CA00100899N	SK-TEAN10E25
192PX-4-04C	OSPP320000000625000000000	C016CA00100899V	SK-TEAN10E32
192PX-6-05	OSPP320000000625110000000	C016CA00100999N	SK-TEAN10E32V
192PX-6-06	OSPP320000000625110000000	C016CA00101599N	SK-TEAN10E40
192PX-6-06C	OSPP320000000630000K00000	C016CA00102099N	SK-TEAN10E50
192PX-8-06	OSPP320000000630000K00000	C016CA00109999N	SK-TEAN10E50V
192PX-8-08	OSPP320000000630001000000	C016CA00111299N	SK-TEAN10E63
192RS-4-04	OSPP320000000630001000000	C016CA00119913N	SK-TEAN10E63V
192RS-8-08	OSPP320000000635000000000	C016CA00121299N	SK-TEAN10E80
192RX-4-04	OSPP320000000635000000000	C016CA00121599N	SK-TEAPVP04
192TX-4-025W	OSPP320000000640000000000	C016CA00129999N	SK-TEHB4E100V

192YX-12-10	OSPP320000000640000000000	C016CA00151099N	SK-TEHC404E100V
192YX-12-12	OSPP320000000645000F00000	C016CA00159999N	SK-TEHC4E125V
192YX-16-12	OSPP320000000645000F00000	C016CA00160099N	SK-TEHC4E70V
192YX-16-16	OSPP320000000650000000000	C016CA00202099N	SK-TEHD4E50V
192YX-4-03	OSPP320000000650000000000	C016CA00990000N	SK-TEHE10E100
192YX-4-04	OSPP320000000650000G00000	C016CA00990811N	SK-TEHE10E50
192YX-4-04C	OSPP320000000650000G00000	C016CA00990899V	SK-TEHE10E63
192YX-6-05	OSPP320000000660000000000	C016CA00991599V	SK-TEHE10E80
192YX-6-06	OSPP320000000660000000000	C016CA00999999N	SK-TEHN10E25
192YX-6-06C	OSPP320000000660000200000	C016CA00999999V	SK-TEHN10E32
192YX-8-06	OSPP320000000660000200000	C016CA06000699N	SK-TEHN10E40
192YX-8-08	OSPP320000000660001000000	C016CA06009999N	SK-TEHN4E50V
1932-32-00600-0000-000000	OSPP320000000660001000000	C016CA08000800N	SK-TELC4E100V
1932-32-00600-0000-000000	OSPP320000000670000000000	C016CA08000899N	SK-TELC4E125V
1932-32-00725-0000-000000	OSPP320000000670000000000	C016CA08001012N	SK-TELC4E70V
1932-32-00725-0000-000000	OSPP320000000680000000000	C016CA08001099N	SK-TELR4E125V
1932-32-00725-2000-000000	OSPP320000000680000000000	C016CA08001299N	SK-TPQ063EN
1932-32-00725-2000-000000	OSPP320000000680000G00000	C016CA08002099N	SK-TPQ080EN
1932-32-00800-0000-000000	OSPP320000000680000G00000	C016CA08009909N	SKUR10M
1932-32-00800-0000-000000	OSPP320000000685000000000	C016CA08009917N	SK-US25MN
19346-8-6	OSPP320000000685000000000	C016CA08009999N	SK-VB/VM/VS
19348-8-6	OSPP320000000690000000000	C016CA08999999N	SK-VB/VM/VS V
19430 MNE	OSPP320000000690000000000	C016CA09000810N	SK-VB/VM-A10V
1947FIL	OSPP320000000690000G00000	C016CA09009999N	SK-VB-A06-N
1947FIL	OSPP320000000690000G00000	C016CA10000012N	SK-VBY/VMY-A/L10
1948FIL	OSPP320000000690003000000	C016CA10000099N	SK-VM-A06-N
1948FIL	OSPP320000000690003000000	C016CA10000812N	SK-VMY-L06-N
1949FIL	OSPP320000000700000000000	C016CA10000899N	SK-VMY-L06-V
1949FIL	OSPP320000000700000000000	C016CA10000999N	SK-VMY-L10-N
195-000139-001	OSPP320000000700000000F000	C016CA10001010N	SK-VSA062
195-000159-001	OSPP320000000700000000F000	C016CA10001020N	SK-VSA-1021
195-000211-001	OSPP320000000700000400000	C016CA10001099N	SK-W2MAZ04
195-000213-001	OSPP320000000700000400000	C016CA10001112V	SK-W4DCP07V
1955FIL	OSPP320000000700000600000	C016CA10001299N	SK-W4DFP32
1955FIL	OSPP320000000700000600000	C016CA10001599N	SK-W4EBP50V
1956FIL	OSPP320000000700000D00000	C016CA10002099N	SK-W4ECP10V
1956FIL	OSPP320000000700000D00000	C016CA10009915N	SK-W4EDP10
1963FIL	OSPP320000000700000F00000	C016CA10009999N	SK-W4EFP32
1963FIL	OSPP320000000700000F00000	C016CA10101012V	SK-W4EFP32V
1964FIL	OSPP320000000700000F0F000	C016CA10991099N	SK-W4EMP20V
1964FIL	OSPP320000000700000F0F000	C016CA11000812N	SK-W4EMP25
1977FIL	OSPP320000000700000G00000	C016CA11000813N	SK-W4GFP07
1977FIL	OSPP320000000700000G00000	C016CA11000913N	SK-W4MBP10V
1978FIL	OSPP320000000700000K00000	C016CA11001515N	SK-W4MCP10V
1978FIL	OSPP320000000700000K00000	C016CA11009900N	SK-W4MFP07V
19KAAK13MPN	OSPP320000000700001000000	C016CA11009912N	SK-W4TCP10V
19KAAK13MPNS_99	OSPP320000000700001000000	C016CA11009913N	SK-WEE4-06C-N
19KAAK17MPN	OSPP320000000700006000000	C016CA11009913V	SK-WEE4-10B-N
19KAAK17MPNS_99	OSPP320000000700006000000	C016CA11009999N	SK-WLL06F
19KAAK21MPN	OSPP320000000700100G00000	C016CA11110013N	SK-WPL4NP25
19KAAK21MPNS_99	OSPP320000000700100G00000	C016CA12001099N	SK-WRF225A2
19KAIW13MPN	OSPP320000000710000000000	C016CA12001599N	SK-ZMDAZ07V
19KAIW13MPNS_99	OSPP320000000710000000000	C016CA12002099N	SK-ZPRA-Z07

19KAIW17MPN	OSPP32000000720000000000	C016CA12009916N	SK-ZRHAZ07
19KAIW21MPN	OSPP32000000720000000000	C016CA12009999N	SK-ZRHAZ10
19KAIW21MPNS_99	OSPP32000000720001000000	C016CA13001099N	SK-ZSRBZ07
19KATF06MPN	OSPP32000000720001000000	C016CA13001299N	SK-ZUDAZ07V
19KATF06MPX	OSPP32000000750000000000	C016CA13009915N	SK-ZUDBZ07
19KATF08MPN	OSPP32000000750000000000	C016CA13009999N	SK-ZUDBZ10
19KATF08MPNS_99	OSPP32000000075000000F000	C016CA14000099N	SK-ZWDA9Z10
19KATF09MPN	OSPP32000000075000000F000	C016CA14000815N	SK-ZWDBZ07
19KATF10MPN	OSPP32000000750000200000	C016CA14001399N	SK-ZWDZZ10
19KATF10MPNS_99	OSPP32000000750000200000	C016CA14009915N	SL08-25-16-CFX
19KATF10MPX	OSPP320000000750000D00000	C016CA15001299N	SL12-30-20-CFX
19KATF13MPN	OSPP320000000750000D00000	C016CA15009999N	SL12-30-25-CFX
19SFAK13SXN	OSPP320000000750000F00000	C016CA20990899N	SL12-30-25-SSX
19SFAK17SXN	OSPP320000000750000F00000	C016CA99000000N	SL16-38-30-CFX
19SFIW13SXN	OSPP320000000750000G00000	C016CA99000099N	SL16-38-30-SSX
19SFIW17SXN	OSPP320000000750000G00000	C016CA99000800V	SL20-42-38-CFX
19SFTF06SXN	OSPP320000000750000K00000	C016CA99000899N	SL20-42-38-SSX
19SFTF08SXN	OSPP320000000750000K00000	C016CA99000899V	SL2-04-LYV0
19SFTF10SXN	OSPP32000000075000100F000	C016CA99000999N	SL2-04-LYV0
1A-B2LJ-SSP	OSPP32000000075000100F000	C016CA99001099N	SL2200
1A-H0A-EPR-SS-K	OSPP320000000750002A00000	C016CA99009908N	SL24-50-38-CFX
1A-H0A-EPR-SS-TC-C3	OSPP320000000750002A00000	C016CA99009999N	SL24-50-38-SSX
1A-H0A-KZ-SS-K	OSPP32000000755000000000	C016CA99009999V	SL2-C4-LLV0
1A-H0A-KZ-SS-TC	OSPP32000000755000000000	C016CA99081508N	SL2-C4-LLV0
1A-H0A-V-SS-K	OSPP32000000756003003000	C016CA99089999N	SL32-60-50-CFX
1A-H0A-V-SS-TC	OSPP32000000756003003000	C016CA99101299N	SL32-60-50-SSX
1A-H1A-EPR-SS-K	OSPP32000000760000200000	C016CA99991015V	SL40-75-60-CFX
1A-H1A-KZ-SS-TC	OSPP32000000760000200000	C016CA99991299N	SL40-75-60-SSX
1A-H1A-V-SS-K	OSPP32000000760000400000	C016CA99999999N	SL4400
1A-H2A-V-SS-TC	OSPP32000000760000400000	C016CA99999999V	SL48-90-75-CFX
1A-H4A-V-SS-K	OSPP32000000765000000000	C016E17S99999999N	SL6600
1AL91N-12-12C	OSPP32000000765000000000	C016E25S10990012N	SL8800
1AL91N-16-16C	OSPP32000000770000000000	C016E25S99999999N	SLA04571X
1AL91N-4-4C	OSPP32000000770000000000	C016E35S10081199N	SLA0X
1AL91N-6-6C	OSPP32000000780000000000	C016E35S11009913N	SLA24571X
1AL91N-8-8C	OSPP32000000780000000000	C016F17S109912N	SLA2X
1A-MB2LPFA-SSP	OSPP32000000780000200000	C016F35S109912N	SLA34571X
1A-MB2XPFA-SSP	OSPP32000000780000200000	C016G35S10990012N	SLA3X
1A-NSA-BN-B-K	OSPP32000000785001000000	C016G35S12991299N	SLA44571X
1A-NSA-BN-SS-K	OSPP32000000785001000000	C016G35S99999999N	SLA4X
1A-NSA-V-B-K	OSPP32000000790000000000	C016HN00999999N	SLA54571X
1A-NSA-V-SS-K	OSPP32000000790000000000	C016VA08000899N	SLA5X
1A-NSL-BN-B-K	OSPP32000000790000400000	C016VA99999912N	SLA64571X
1A-NSL-EPR-SS-K	OSPP32000000790000400000	C016WA08001099N	SLA6X
1A-NSL-EPR-SS-V	OSPP32000000790003000000	C016WA99999999N	SLF2200
1A-NSL-KZ-SS-K	OSPP32000000790003000000	C016WA99999999V	SLF2200-10/35
1A-NSL-V-SS-K	OSPP32000000800000000000	C025AA00N	SLF2200-5/10
1A-NSL-V-SS-V	OSPP32000000800000000000	C025AA08N	SLF4400
1ASFDS012P04700	OSPP32000000080000000F000	C025AA09N	SLF4400-10/35
1ASFDS012P04700	OSPP32000000080000000F000	C025AA10N	SLF4400-5/10
1ASFSS040P01000	OSPP32000000800000200000	C025AA10V	SLF6600
1ASFSS040P01000	OSPP32000000800000200000	C025AA12N	SLF6600-10/35
1AY2X-10-05	OSPP32000000800000600000	C025AA13N	SLF6600-5/10

1AY2X-6-03	OSPP320000000800000600000	C025AA13V	SLF8800
1AY2X-8-05	OSPP320000000800000D00000	C025AA14N	SLF8800-5/10
1AY5X-6-03	OSPP320000000800000D00000	C025AA15N	SLVD1NE5E5
1AYJX-16-12W	OSPP320000000800000G00000	C025AA20N	SLVD1NE5E6RUL
1AYKX-6-04W	OSPP320000000800000G00000	C025AA22N	SLVD1NS
1AYKX-8-05W	OSPP320000000800001000000	C025AA25V	SLVD1NSF
1AYKY-8-05	OSPP320000000800001000000	C025AA30N	SLVD2ND
1AYLX-16-12	OSPP320000000800003000000	C025AA99N	SLVD2NDR
1AYLX-16-12W	OSPP320000000800003000000	C025AA99V	SLVD2NS
1AYLX-6-03	OSPP320000000800060D00000	C025BN08N	SLVD5NC
1AYLX-6-03C	OSPP320000000800060D00000	C025BN10N	SLVD5ND
1AYLX-6-03W	OSPP320000000800100200000	C025BN10V	SLVD5NDE
1AYLX-6-04	OSPP320000000800100200000	C025BN12N	SLVD5NE5E5
1AYLX-8-05W	OSPP320000000800100G00000	C025BN15N	SLVD5NS
1B126-4-4	OSPP320000000800100G00000	C025BN20N	SLVD5NSE
1B126-6-6	OSPP320000000800D00M00000	C025BN99N	SLVD5NSF
1B126-8-8	OSPP320000000800D00M00000	C025BN99V	SLVD5NSR
1B143-10-10	OSPP320000000810000000000	C025BY08N	SLVD7NE5
1B143-12-12	OSPP320000000810000000000	C025BY10N	SLVD7NE5E5
1B143-16-16	OSPP320000000810000G00000	C025BY12N	SLVD7NS
1B143-6-6	OSPP320000000810000G00000	C025BY15N	SLVD7NSE
1B143-8-8	OSPP320000000820001000000	C025BY20N	SLVD7NSF
1B146-10-10	OSPP320000000820001000000	C025BY99N	SM016005A1
1B146-10-8	OSPP320000000825003000000	C025BY99V	SM04
1B146-12-10	OSPP320000000825003000000	C025CA00000000N	SM04C
1B146-12-12	OSPP320000000826003003000	C025CA00001520V	SM04R
1B146-16-12	OSPP320000000826003003000	C025CA00001599N	SM05
1B146-16-16	OSPP320000000083000020F000	C025CA00002000N	SM05N
1B146-20-20	OSPP320000000083000020F000	C025CA00069999N	SM05R
1B146-2-4	OSPP320000000840000000000	C025CA00080000N	SM06
1B146-4-4	OSPP320000000840000000000	C025CA00080808N	SM06C
1B146-6-4	OSPP320000000840001000000	C025CA00080899N	SM06DX
1B146-6-5	OSPP320000000840001000000	C025CA00081299N	SM06ES
1B146-6-6	OSPP320000000850000000000	C025CA00082099N	SM06FX
1B146-6-8	OSPP320000000850000000000	C025CA00089999N	SM06N
1B146-8-6	OSPP320000000085000000F000	C025CA00100000N	SM06NS
1B146-8-8	OSPP320000000085000000F000	C025CA00100099N	SM06R
1B148-10-10	OSPP320000000850000200000	C025CA00101299N	SM06RS_01
1B148-10-8	OSPP320000000850000200000	C025CA00101299V	SM06S
1B148-12-10	OSPP320000000850000G00000	C025CA00102099N	SM08
1B148-12-12	OSPP320000000850000G00000	C025CA00109999N	SM08C
1B148-16-12	OSPP320000000850001000000	C025CA00110913N	SM08DX
1B148-16-16	OSPP320000000850001000000	C025CA00121014N	SM08FX
1B148-20-20	OSPP320000000085000100F000	C025CA00121299N	SM08N
1B148-24-24	OSPP320000000085000100F000	C025CA00121299V	SM08R
1B148-32-32	OSPP320000000850010000000	C025CA00121599N	SM08S
1B148-4-4	OSPP320000000850010000000	C025CA00121599V	SM08S_04
1B148-6-4	OSPP320000000855000000000	C025CA00122599N	SM10
1B148-6-5	OSPP320000000855000000000	C025CA00129999N	SM10C
1B148-6-6	OSPP320000000856000G00000	C025CA00131599N	SM10N
1B148-6-8	OSPP320000000856000G00000	C025CA00139915N	SM10R
1B148-8-6	OSPP320000000900000000000	C025CA00139999N	SM10S
1B148-8-8	OSPP320000000900000000000	C025CA00150099N	SM10S_02

1B155-4-4	OSPP32000000900000006000	C025CA00151299N	SM12N
1B156-12-12	OSPP32000000900000006000	C025CA00151599N	SM12R
1B156-4-3	OSPP32000000900000200000	C025CA00151899V	SM161AE-NPSN
1B156-4-4	OSPP32000000900000200000	C025CA00159999N	SM16S_01
1B156-6-5	OSPP320000000900000F0F000	C025CA00189999N	SM1-C2-EYV0
1B156-6-6	OSPP320000000900000F0F000	C025CA00201299N	SM1-C2-EYV0
1B156-8-8	OSPP320000000900000G00000	C025CA00202099N	SM2-04-EHV0
1B170-10-10	OSPP320000000900000G00000	C025CA00990808N	SM2-04-EHV0
1B170-10-8	OSPP320000000900070B00000	C025CA00991599N	SM22X1.5X
1B170-12-10	OSPP320000000900070B00000	C025CA00999999N	SM232AQ-NPSN
1B170-12-12	OSPP320000000900700B00000	C025CA00999999V	SM233AQ-NPSN
1B170-16-12	OSPP320000000900700B00000	C025CA06009906N	SM-251-4FB
1B170-16-16	OSPP32000000093500000F000	C025CA06009999N	SM-251-4FP
1B170-4-6	OSPP32000000093500000F000	C025CA08000000N	SM-251-6FB
1B170-6-6	OSPP320000000940000G00000	C025CA08000800N	SM-251-6FP
1B170-8-6	OSPP320000000940000G00000	C025CA08000899N	SM-252-4FB
1B170-8-8	OSPP32000000950000000000	C025CA08001012N	SM-252-4FP
1B171-10-10	OSPP32000000950000000000	C025CA08001099N	SM-252-6FB
1B171-12-12	OSPP320000000950000G00000	C025CA08001215N	SM-252-6FP
1B171-16-16	OSPP320000000950000G00000	C025CA08009999N	SM2-C4-EXV0
1B171-20-20	OSPP32000000950001000000	C025CA08080800N	SM2-C4-EXV0
1B173-12-12	OSPP32000000950001000000	C025CA08080808N	SM2-C4-EYV0
1B173-16-16	OSPP32000000965000200000	C025CA08080820N	SM2-C4-EYV0
1B173-20-20	OSPP32000000965000200000	C025CA09000610N	SM5
1B173-24-24	OSPP32000000970000000000	C025CA09009914N	SM5
1B173-32-32	OSPP32000000970000000000	C025CA09009999N	SM-501-12FB
1B178-12-12	OSPP32000000975003000000	C025CA10000012N	SM-501-8FB
1B178-16-16	OSPP32000000975003000000	C025CA10000099N	SM-502-12FB
1B178-20-20	OSPP320000000980000F0F000	C025CA10000812N	SM-502-8FB
1B178-24-24	OSPP320000000980000F0F000	C025CA10000899N	SM-751-12FB
1B1NX-4-04	OSPP32000001000000000000	C025CA10001099N	SM-751-16FB
1B1NX-8-08	OSPP32000001000000000000	C025CA10001208N	SM-752-12FB
1B1PX-8-08	OSPP32000000100000000F000	C025CA10001299N	SM-752-16FB
1B1YX-4-03	OSPP32000000100000000F000	C025CA10001299V	SMA1/3-1000CF
1B1YX-6-06	OSPP32000001000000200000	C025CA10001399N	SMA1/3-1500CF
1B226-12-12	OSPP32000001000000200000	C025CA10001599N	SMA1/3-200X
1B226-16-16	OSPP32000001000000400000	C025CA10009908N	SMA1/3-400CF
1B226-4-4	OSPP32000001000000400000	C025CA10009912N	SMA-11/16-700
1B226-6-6	OSPP32000001000000600000	C025CA10009999N	SMA1-1000CF
1B226-8-8	OSPP32000001000000600000	C025CA10101213N	SMA1-1500CF
1B243-10-10	OSPP32000001000000800000	C025CA10991099N	SMA1-2000CF
1B243-12-10	OSPP32000001000000800000	C025CA11001299N	SMA1-2500CF
1B243-12-12	OSPP320000001000000D00000	C025CA11009900N	SMA1-250CF
1B243-12-12C	OSPP320000001000000D00000	C025CA11009912N	SMA1-3200CF
1B243-16-16	OSPP320000001000000F0F000	C025CA11009999N	SMA1-4000CF
1B243-16-16C	OSPP320000001000000F0F000	C025CA12000899N	SMA1-400CF
1B243-4-4C	OSPP320000001000000G00000	C025CA12001099N	SMA1-630CF
1B243-6-6	OSPP320000001000000G00000	C025CA12001217N	SMA1-800CF
1B243-6-6C	OSPP320000001000000K00000	C025CA12001299N	SMA3-10000CF
1B243-8-6	OSPP320000001000000K00000	C025CA12001599N	SMA3-100071
1B243-8-8	OSPP32000001000001000000	C025CA12001599V	SMA3-1000CF
1B243-8-8C	OSPP32000001000001000000	C025CA12002099N	SMA3-150071
1B246-10-10	OSPP32000001020000000000	C025CA12009908N	SMA3-1500CF

1B246-10-8	OSPP320000001020000000000	C025CA12009915N	SMA3-200071
1B246-12-10	OSPP320000001020000200000	C025CA12009917N	SMA3-2000CF
1B246-12-12	OSPP320000001020000200000	C025CA12009999N	SMA3-20071
1B246-16-12	OSPP320000001020001000000	C025CA12009999V	SMA3-200CF
1B246-16-16	OSPP320000001020001000000	C025CA12991299N	SMA3-250071
1B246-20-20	OSPP320000001050000000000	C025CA12991599N	SMA3-2500CF
1B246-2-4	OSPP320000001050000000000	C025CA12999999N	SMA3-2600CF
1B246-4-4	OSPP320000001050000D00000	C025CA13000099N	SMA3-3000CF
1B246-6-4	OSPP320000001050000D00000	C025CA13001115N	SMA3-30071
1B246-6-5	OSPP320000001050000F00000	C025CA13001199N	SMA3-300CF
1B246-6-6	OSPP320000001050000F00000	C025CA13001200N	SMA3-320071
1B246-6-8	OSPP320000001050000F0F000	C025CA13001599N	SMA3-3200CF
1B246-8-4	OSPP320000001050000F0F000	C025CA13009914N	SMA3-3200X
1B246-8-6	OSPP320000001050001000000	C025CA13009915N	SMA3-3400CF
1B246-8-8	OSPP320000001050001000000	C025CA13009915V	SMA3-400071
1B248-10-10	OSPP320000001060000600000	C025CA13009999N	SMA3-4000CF
1B248-10-8	OSPP320000001060000600000	C025CA13130015N	SMA3-40071
1B248-12-10	OSPP320000001080000L00000	C025CA13990815N	SMA3-400CF
1B248-12-12	OSPP320000001080000L00000	C025CA13999914N	SMA3-5000CF
1B248-16-12	OSPP320000001100000000000	C025CA14000017N	SMA3-500CF
1B248-16-16	OSPP320000001100000000000	C025CA14000099N	SMA3-6000CF
1B248-16-16C	OSPP320000001100000200000	C025CA14009917N	SMA3-63071
1B248-20-20	OSPP320000001100000200000	C025CA14009999N	SMA3-630CF
1B248-2-4	OSPP320000001100000600000	C025CA15000099N	SMA3-7000CF
1B248-24-24	OSPP320000001100000600000	C025CA15000816N	SMA3-80071
1B248-32-32	OSPP320000001100000F00000	C025CA15001199N	SMA3-800CF
1B248-4-4	OSPP320000001100000F00000	C025CA15001200N	SMA3-9000HCF
1B248-4-4C	OSPP320000001100000F0F000	C025CA15001299N	SMA3-KK
1B248-6-4	OSPP320000001100000F0F000	C025CA15001599N	SMA3-VAS-1
1B248-6-5	OSPP320000001100000G00000	C025CA15009916N	SMA4-1000X
1B248-6-6	OSPP320000001100000G00000	C025CA15009999N	SMA4-1500X
1B248-6-8	OSPP320000001100001000000	C025CA15119916N	SMA4-1600X
1B248-8-4	OSPP320000001100001000000	C025CA15151599N	SMA4-2000X
1B248-8-6	OSPP320000001110001000000	C025CA18000099N	SMA4-400/400B71X
1B248-8-8	OSPP320000001110001000000	C025CA18009999N	SMA4-4000/400B71X
1B248-8-8C	OSPP320000001150000000000	C025CA18081800N	SMA4-4000X
1B255-16-16	OSPP320000001150000000000	C025CA20000099N	SMA4-400X
1B255-4-4	OSPP320000001150000600000	C025CA20009999N	SMA4-800X
1B255-4-4C	OSPP320000001150000600000	C025CA25009999N	SMA-K6L-1000-CF
1B255-6-5	OSPP320000001150000G00000	C025CA99000099N	SMA-K6L-1100-CF
1B255-6-6	OSPP320000001150000G00000	C025CA99000899N	SMA-K6L-1200-CF
1B255-6-6C	OSPP320000001150100200000	C025CA99001099N	SMA-K6L-1300-CF
1B255-8-8	OSPP320000001150100200000	C025CA99009908N	SMA-K6L-1400-CF
1B255-8-8C	OSPP320000001150100300000	C025CA99009915N	SMA-K6L-1500-CF
1B256-10-8	OSPP320000001150100300000	C025CA99009999N	SMA-K6L-200-CF
1B256-4-3	OSPP320000001161000G00000	C025CA99009999NX684	SMA-K6L-300-CF
1B256-4-4	OSPP320000001161000G00000	C025CA99009999V	SMA-K6L-400-CF
1B256-6-5	OSPP320000001175000000000	C025CA99089999N	SMA-K6L-500-CF
1B256-6-6	OSPP320000001175000000000	C025CA99100099N	SMA-K6L-600-CF
1B256-8-8	OSPP320000001180000000000	C025CA99121299N	SMA-K6L-700-CF
1B258-12-12	OSPP320000001180000000000	C025CA99129999N	SMA-K6L-800-CF
1B258-16-16	OSPP320000001180000000F000	C025CA99131599N	SMA-K6L-900-CF
1B258-4-4	OSPP320000001180000000F000	C025CA99991099N	SMB10015065242IBW644

1B270-10-10	OSPP320000001190000F0F000	C025CA99999999N	SMB10030065192I644
1B270-10-8	OSPP320000001190000F0F000	C025CA99999999V	SMB10030065192IB642
1B270-12-10	OSPP320000001200000000000	C025E17L13009914V	SMB10030065192IB644
1B270-12-12	OSPP320000001200000000000	C025E17S10110013N	SMB10030065192IBW642
1B270-12-12C	OSPP320000001200000200000	C025E17S13990014N	SMB10030065192ID642
1B270-16-10	OSPP320000001200000200000	C025E17S13990014V	SMB10030065192ID64M4
1B270-16-12	OSPP320000001200000600000	C025E17S99990099N	SMB10030065192ID652
1B270-16-16	OSPP320000001200000600000	C025E25L11990013N	SMB10030065193M642
1B270-16-16C	OSPP320000001200000F0F000	C025E25S13001400N	SMB10030065193MB654
1B270-6-6	OSPP320000001200000F0F000	C025E35L11990013N	SMB1003006519S3M642
1B270-6-6C	OSPP320000001200000G00000	C025E35S09999999N	SMB10030065243M644
1B270-8-6	OSPP320000001200000G00000	C025E35S10000099N	SMB1003006819S2I642
1B270-8-8	OSPP320000001200001A00000	C025E35S10000899N	SMB1003406519S2IB64M4
1B270-8-8C	OSPP320000001200001A00000	C025E35S10080099N	SMB1004506519S2IZW654
1B271-12-12	OSPP320000001240000G00000	C025E35S11990013N	SMB10045065242B642
1B271-16-16	OSPP320000001240000G00000	C025E35S11990099N	SMB11530108192I644
1B271-20-20	OSPP320000001250000000000	C025E35S13009914N	SMB11530108242I652
1B271-24-24	OSPP320000001250000000000	C025E35S99999999N	SMB11530108242ID654
1B271-32-32	OSPP320000001290000000000	C025F10S999999N	SMB11540108192I642
1B271-6-6	OSPP320000001290000000000	C025F17S999999N	SMB14230155241644
1B271-8-8	OSPP320000001300000000000	C025F35S100899N	SMB14256155192I644
1B273-12-12	OSPP320000001300000000000	C025G35S10100899N	SMB1425615524S3MB64M4
1B273-16-16	OSPP320000001300000200000	C025G35S11990013N	SMB14256155282B644
1B273-20-20	OSPP320000001300000200000	C025G35S11991199N	SMB42600,35590642
1B273-24-24	OSPP320000001300000300000	C025G35S12991208N	SMB42600,35590V642
1B273-32-32	OSPP320000001300000300000	C025VA99999999N	SMB42600,35590V652
1B278-12-12	OSPP320000001300000G00000	C025WA99000899N	SMB42600,3559S0642
1B278-16-16	OSPP320000001300000G00000	C025WA990012999999NXG017	SMB42600,3559S0V642
1B278-20-20	OSPP320000001300001000000	C025WA99001299N	SMB601001,489SDC64E2
1B278-24-24	OSPP320000001300001000000	C025WA99009999N	SMB60301,45112I644
1B2NX-12-12	OSPP320000001320003003000	C025WA99999999N	SMB60301,45112IB642
1B2NX-16-16	OSPP320000001320003003000	C02A3CZN	SMB60301,45112IBW642
1B2NX-6-06	OSPP320000001346000000000	C02A3EZN	SMB60301,45112ID642
1B2NX-8-08	OSPP320000001346000000000	C02A3GZN	SMB60301,45112ID64M4
1B2PC-12-12	OSPP320000001350000000000	C032AA00N	SMB60301,45112IDW642
1B2PC-4-04	OSPP320000001350000000000	C032AA06N	SMB60301,45113M642
1B2PC-6-06	OSPP320000001350000200000	C032AA08N	SMB60301,45113M644
1B2PC-8-06	OSPP320000001350000200000	C032AA08V	SMB60301,45113MB654
1B2PC-8-08	OSPP320000001350001000000	C032AA10N	SMB60301,48112D642
1B2PX-12-12	OSPP320000001350001000000	C032AA10V	SMB60301,48113MB644
1B2PX-2-03	OSPP320000001375000F0F000	C032AA12N	SMB60301,4892ID654
1B2PX-4-03	OSPP320000001375000F0F000	C032AA12V	SMB60301,4893MB654
1B2PX-4-04	OSPP320000001375000G00000	C032AA14N	SMB60450,558111I642
1B2PX-6-06	OSPP320000001375000G00000	C032AA14V	SMB60451,4811S2I642
1B2PX-8-06	OSPP320000001400000000000	C032AA15N	SMB60451,4892IZW652
1B2PX-8-08	OSPP320000001400000000000	C032AA15V	SMB60451,489S2IZW654
1B2YX-4-03	OSPP320000001400000200000	C032AA16N	SMB60500,55811S1I642
1B2YX-4-04	OSPP320000001400000200000	C032AA18N	SMB60600,5589S1I642
1B2YX-6-06	OSPP320000000140000020F000	C032AA20N	SMB60600,5589S2ID642
1B2YX-8-06	OSPP320000000140000020F000	C032AA40N	SMB60601,45112IB642
1B2YX-8-08	OSPP320000001400000G00000	C032AA99N	SMB60601,45113M642
1B446-10-10	OSPP320000001400000G00000	C032AA99V	SMB60601,45113MB642
1B446-12-12	OSPP320000001400000K00000	C032BN00N	SMB60601,4811S3M642

1B446-16-16	OSPP320000001400000K00000	C032BN08N	SMB60601,489S1I642
1B446-4-4	OSPP320000001400001000000	C032BN08V	SMB8230035143M642
1B446-6-4	OSPP320000001400001000000	C032BN10N	SMB8230035192ID654
1B446-6-6	OSPP320000001410000000000	C032BN10V	SMB8230035193M644
1B446-8-6	OSPP320000001410000000000	C032BN12N	SMB8230035193M64M4
1B446-8-8	OSPP320000001410000F0F000	C032BN12V	SMB823003519S3M642
1B448-10-10	OSPP320000001410000F0F000	C032BN15N	SMB8230038142I644
1B448-12-12	OSPP320000001440000000000	C032BN18N	SMB8230038142IB644
1B448-16-16	OSPP320000001440000000000	C032BN20N	SMB8230038142ID652
1B448-4-4	OSPP320000001450000000000	C032BN99N	SMB8230038142IZW652
1B448-6-4	OSPP320000001450000000000	C032BN99V	SMB8230038143M642
1B448-6-6	OSPP320000001450001000000	C032BY08N	SMB8230038143M644
1B448-8-6	OSPP320000001450001000000	C032BY12N	SMB8230038143MB642
1B448-8-8	OSPP320000001450100200000	C032BY15N	SMB8230038143MB644
1B455-4-4	OSPP320000001450100200000	C032BY20N	SMB823003819S3M642
1B455-6-6	OSPP320000001450100300000	C032CA00000000N	SMB8240038142ID642
1B455-8-8	OSPP320000001450100300000	C032CA00000808N	SMB8245035192IB642
1B470-12-12	OSPP320000001454001000000	C032CA00001515N	SMB8245035192IBW642
1B4PX-4-04	OSPP320000001454001000000	C032CA00080808N	SMB824503519S3M64M2
1B546-12-10	OSPP320000001480000000000	C032CA00081299N	SMB8245038142IZW652
1B546-12-12	OSPP320000001480000000000	C032CA00082000N	SMB8245038143MB642
1B546-12-8	OSPP320000001500000000000	C032CA00089999N	SMB8256035192A644
1B546-16-16	OSPP320000001500000000000	C032CA00101299N	SMB8256038143MB654
1B546-4-4	OSPP320000001500000D00000	C032CA00109999N	SMB8260038A2S3MB64E102
1B546-4-5	OSPP320000001500000D00000	C032CA00109999V	SMB8260038B5S3MB64E802
1B546-6-5	OSPP320000001500000G00000	C032CA00111599N	SMBA10030065193MB644
1B546-6-6	OSPP320000001500000G00000	C032CA00119999N	SMBA1003006519S2ID644
1B546-8-5	OSPP320000001500003000000	C032CA00121000N	SMBA10030065A5S2D642
1B546-8-6	OSPP320000001500003000000	C032CA00121000V	SMBA10045065192IZW652
1B546-8-8	OSPP320000001520001000000	C032CA00121217N	SMBA11530105192D642
1B548-12-10	OSPP320000001520001000000	C032CA00121299N	SMBA11530105243MB644
1B548-12-12	OSPP320000001522000000000	C032CA00121599N	SMBA11530108192B642
1B548-12-8	OSPP320000001522000000000	C032CA00129999N	SMBA14230155243MB644
1B548-16-16	OSPP320000001550000200000	C032CA00129999V	SMBA14256155282B644
1B548-4-4	OSPP320000001550000200000	C032CA00140099N	SMBA14256155282I644
1B548-4-5	OSPP320000001560000G00000	C032CA00149917V	SMBA60301,45112ID644
1B548-6-5	OSPP320000001560000G00000	C032CA00149999N	SMBA60301,45112VD640
1B548-6-6	OSPP320000001565000000000	C032CA00150099N	SMBA60301,45113MB644
1B548-8-5	OSPP320000001565000000000	C032CA00151599N	SMBA60301,4892VB640
1B548-8-6	OSPP320000001600000000000	C032CA00152099N	SMBA60301,4892VBW640
1B548-8-8	OSPP320000001600000000000	C032CA00159999N	SMBA60301,4892VBW640-A154
1B554-8-4	OSPP320000001600000000000X	C032CA00181299N	SMBA60601,48A6S3M642
1B555-8-6	OSPP320000001600000000000X	C032CA00189999N	SMBA8225038142VD650
1B556-8-8	OSPP320000001600000004000	C032CA00201599N	SMBA8230035193MB644
1B570-12-10	OSPP320000001600000004000	C032CA00202020N	SMBA823003519S2ID64M4
1B570-12-12	OSPP320000001600000G00000	C032CA00202099N	SMBA823003819S3MB642
1BC1-316	OSPP320000001600000G00000	C032CA00259999N	SMBA8245038142IZW652
1BC1-B	OSPP320000001600000100000X	C032CA00990000N	SMBA8245038143MB642
1BF1-316	OSPP320000001600001000000X	C032CA00991899N	SMBGM2NRNBG0/3-C
1BF1-B	OSPP320000001610000G00000	C032CA00999999N	SMBRBG4
1BLEN1-316	OSPP320000001610000G00000	C032CA08000010N	SMBRPMBG0/2
1BLP1-316	OSPP320000001650000000000	C032CA08000800N	SMC-1N
1BLP1-B	OSPP320000001650000000000	C032CA08000808N	SMC-1NC

1BPEX-4-012	OSPP32000000016700000000000	C032CA08001215N	SMC-1P
1BSPBUWS	OSPP32000000016700000000000	C032CA08009999N	SMC-1PC
1BSPBUWSS	OSPP32000000016800000000000	C032CA08009999V	SMD-1L
1C046-20-12	OSPP32000000016800000000000	C032CA08080808N	SME10015065192I64B94
1C048-20-12	OSPP32000000017000000000000	C032CA08080820N	SME10030065192I64B94
1C048-25-16	OSPP32000000017000000000000	C032CA09009999N	SME1003006524S2ID64A74
1C048-32-20	OSPP320000001700000G00000	C032CA10000012N	SME10056065192I64B94
1C048-42-24	OSPP320000001700000G00000	C032CA10000611N	SME1005606519S2ID65C44
1C048-50-32	OSPP320000001700000G06000	C032CA10000899N	SME11540107242I64A3M4
1C070-20-12	OSPP320000001700000G06000	C032CA10001010N	SME14220155242I64B94
1C070-25-16	OSPP32000000017050000000000	C032CA10001099N	SME60601,45112IB64B32
1C346-10-4	OSPP32000000017050000000000	C032CA10001212N	SME60601,4892ID65B34
1C346-10-5	OSPP32000000017200000000000	C032CA10001299N	SME60751,4511064B32
1C346-10-6	OSPP32000000017200000000000	C032CA10001399N	SME8230035192I64B94
1C346-12-5	OSPP32000000017250000000000	C032CA10009906N	SME8230038142IBW64D54
1C346-12-6	OSPP32000000017250000000000	C032CA10009999N	SME8230038192IB64C64
1C346-15-10	OSPP32000000017460000000000	C032CA12000000N	SME827503714S2ID64C12
1C346-15-8	OSPP32000000017460000000000	C032CA12000015N	SME8275038142ID64C64
1C346-18-10	OSPP32000000017500000000000	C032CA12000017N	SMEA14230155242I64C14
1C346-22-12	OSPP32000000017500000000000	C032CA12000099N	SMEA60601,45112VD64B34
1C346-28-16	OSPP32000000017500001000000	C032CA12000099V	SMEA826003714S2IZW-A116
1C346-35-20	OSPP32000000017500001000000	C032CA12000899N	SMH10030065192I654
1C346-6-4	OSPP32000000017750000000000	C032CA12001099N	SMH10030065192I65A74
1C346-8-4	OSPP32000000017750000000000	C032CA12001212N	SMH10030065192ID654
1C348-10-4	OSPP32000000018000000000000	C032CA12001213N	SMH10030065192ID65A74
1C348-10-5	OSPP32000000018000000000000	C032CA12001299N	SMH1003006519S2ID65A74
1C348-10-6	OSPP32000000018000000400000	C032CA12001499N	SMH10030065ET2I654
1C348-12-5	OSPP32000000018000000400000	C032CA12001500N	SMH10045065192I654
1C348-12-6	OSPP320000001800001A00000	C032CA12001514N	SMH10045065192ID654
1C348-15-8	OSPP320000001800001A00000	C032CA12001599N	SMH10055065192ID642
1C348-18-10	OSPP32000000018000100000000	C032CA12001599V	SMH10056065192I64A74
1C348-22-12	OSPP32000000018000100000000	C032CA12001999N	SMH10056065192I654
1C348-28-16	OSPP32000000018200000000000	C032CA12002099N	SMH10056065192I65A24
1C348-6-4	OSPP32000000018200000000000	C032CA12009908N	SMH10056065192I65A74
1C348-8-4	OSPP32000000018400002000000	C032CA12009913N	SMH10056065192I65G54
1C354-6-4	OSPP32000000018400002000000	C032CA12009999N	SMH10056065192IB65A74
1C354-8-4	OSPP32000000018500000000000	C032CA12009999V	SMH10056065192ID654
1C355-10-5	OSPP32000000018500000000000	C032CA12991299N	SMH10056065192ID65A64
1C355-10-6	OSPP32000000018500002000000	C032CA12991599V	SMH10056065192ID65A74
1C355-12-5	OSPP32000000018500002000000	C032CA13001399N	SMH10056065192ID65M4
1C355-12-6	OSPP32000000018500010000000	C032CA13002099N	SMH10056065193M654
1C355-12-6SW22	OSPP32000000018500010000000	C032CA13009914N	SMH1005606519S2IB65A74
1C355-15-8	OSPP32000000018501000000000	C032CA13009917N	SMH1005606519S2ID654
1C355-18-12	OSPP32000000018501000000000	C032CA14000017N	SMH1005606519S2ID65A74
1C355-22-12	OSPP32000000018700000000000	C032CA14000018N	SMH10056065242ID654
1C355-28-16	OSPP32000000018700000000000	C032CA14001217N	SMH1005606524S2ID65M4
1C355-6-3	OSPP32000000019250000000000	C032CA14001599N	SMH10056065B82IB65A74
1C355-6-3C	OSPP32000000019250000000000	C032CA14009917N	SMH10075065192I654
1C355-6-3OEM-WL	OSPP32000000019300000000000	C032CA14009917V	SMH10075065192ID654
1C355-8-4	OSPP32000000019300000000000	C032CA14009999N	SMH10075065192ID65A72
1C356-10-4	OSPP320000001942360BB0000	C032CA15000099N	SMH10075065192ID65A74
1C356-10-5	OSPP320000001942360BB0000	C032CA15001299N	SMH1007506519S2ID65A74
1C356-10-6	OSPP32000000019500000000000	C032CA15001599N	SMH1007506819S2I654

1C356-12-5	OSPP320000001950000000000	C032CA15002099N	SMH11520105192I654
1C356-12-6	OSPP320000001950000000000X	C032CA15009918N	SMH11520108192I654
1C356-15-8	OSPP320000001950000000000X	C032CA15009920N	SMH11530105242I644
1C356-6-3	OSPP320000002000000000000	C032CA15009999N	SMH11530105242I65A74
1C356-8-4	OSPP320000002000000000000	C032CA15151599N	SMH11530107192I654
1C358-18-12	OSPP320000002000000200000	C032CA15990899N	SMH11530107242I654
1C358-22-12	OSPP320000002000000200000	C032CA15992099N	SMH11530107242I65A74
1C358-8-4	OSPP320000002000001000000	C032CA16009914N	SMH11530108192I654
1C35X-8-03	OSPP320000002000001000000	C032CA16009917N	SMH11530108192I65A74
1C370-12-6	OSPP320000002050000000000	C032CA16009920N	SMH1153010819S2I654
1C371-42-24	OSPP320000002050000000000	C032CA16009999N	SMH11530109192IB654
1C38X-10-04	OSPP320000002060000000000	C032CA16129917N	SMH11540107242I654
1C38X-8-04	OSPP320000002060000000000	C032CA16991699N	SMH11540108192I654
1C391N-10-6C-RD	OSPP320000002064000000000	C032CA20002099N	SMH1154010819S2I654
1C391N-10-6-RD	OSPP320000002064000000000	C032CA20002599N	SMH1154010819S2I65A74
1C391N-10-8C-RD	OSPP320000002100100000000	C032CA20009999N	SMH1155610524S2I654
1C391N-10-8-RD	OSPP320000002100100000000	C032CA99000699N	SMH11556107192ID654
1C391N-12-10C-RD	OSPP320000002146000000000	C032CA99000812N	SMH11556107242I654
1C391N-12-8C-RD	OSPP320000002146000000000	C032CA99001299N	SMH11556107242I65A74
1C391N-15-10C-RD	OSPP320000002150000000000	C032CA99001599N	SMH11556108192I654
1C391N-15-10-RD	OSPP320000002150000000000	C032CA99009908N	SMH11556108192I65A74
1C391N-18-10C-RD	OSPP320000002150000200000	C032CA99009920N	SMH1155610819S2I654
1C391N-18-10-RD	OSPP320000002150000200000	C032CA99009999N	SMH1155610819S2I65A74
1C391N-18-12C-RD	OSPP320000002200000000000	C032CA99009999NX684	SMH1155610819S2ID65A74
1C391N-18-12-RD	OSPP320000002200000000000	C032CA99089999N	SMH11556108242I65A74
1C391N-22-16C-RD	OSPP320000002200001000000	C032CA99129999N	SMH1155610824S2I64A74
1C391N-22-16-RD	OSPP320000002200001000000	C032CA99999999N	SMH1155610824S2I65A74
1C391N-6-4C-RD	OSPP320000002200010000000	C032CA99999999V	SMH14220155192I65A64
1C391N-6-4-RD	OSPP320000002200010000000	C032E07S12001099N	SMH14230155242I654
1C391N-6-5C-RD	OSPP320000002220010000000	C032E07S12001099V	SMH14230155242I65A74
1C391N-6-5-RD	OSPP320000002220010000000	C032E17S08000899V	SMH14230155242I65M4
1C391N-8-5C-RD	OSPP320000002250000000000	C032E17S12000899N	SMH14230155242IB654
1C391N-8-5-RD	OSPP320000002250000000000	C032E17S12990099N	SMH14230155282I65A74
1C391N-8-6C-RD	OSPP320000002250001000000	C032E17S13990014V	SMH14245155242I654
1C391N-8-6-RD	OSPP320000002250001000000	C032E17S14990017N	SMH1424515524S2I654
1C39X-12-06	OSPP320000002270000000000	C032E25L14990017N	SMH14256155242I654
1C3EX-6-02	OSPP320000002270000000000	C032E25S14990017N	SMH14256155242I65A74
1C3EX-8-025	OSPP320000002300000000000	C032E35L09999914V	SMH14256155242ID65A7M4
1C3LX-8-03	OSPP320000002300000000000	C032E35L13009914V	SMH14256155242ID65M4
1C3LX-8-03C	OSPP320000002390000F0F000	C032E35S09999999N	SMH1425615524S2I654
1C3LX-8-04	OSPP320000002390000F0F000	C032E35S10120099N	SMH-1N
1C3LX-8-04C	OSPP320000002400000000000	C032E35S12001099N	SMH-1NC
1C3NX-10-04	OSPP320000002400000000000	C032E35S14990017N	SMH-1P
1C3NX-10-05	OSPP320000002425000F00000	C032E35S99999999N	SMH-1PC
1C3NX-10-06	OSPP320000002425000F00000	C032F07S069913N	SMH42600,35590V642
1C3NX-12-06	OSPP320000002450001000000	C032F35S149917N	SMH42600,3559S0V64C72
1C3NX-12-06C	OSPP320000002450001000000	C032F35S999999N	SMH601051,45112IB654
1C3NX-15-08	OSPP320000002450010000000	C032G35S12101099N	SMH601051,45112ID654
1C3NX-18-10	OSPP320000002450010000000	C032G35S12990014N	SMH601051,4892ID654
1C3NX-22-12	OSPP320000002500000000000	C032VA99990000N	SMH601051,4892ID65A74
1C3NX-28-16	OSPP320000002500000000000	C040AA00N	SMH601051,4892ID65M4
1C3NX-8-04	OSPP320000002605000F00000	C040AA08N	SMH601051,489S2ID65C74
1C3PC-10-04	OSPP320000002605000F00000	C040AA10V	SMH60300,555110V65C72

1C3PC-10-05	OSPP320000002605000F0F000	C040AA12N	SMH60300,55811S2I652
1C3PC-10-06	OSPP320000002605000F0F000	C040AA12V	SMH60301,45112I65C74
1C3PC-12-06	OSPP320000002730000F00000	C040AA13N	SMH60301,45112IB65C74
1C3PC-15-08	OSPP320000002730000F00000	C040AA15N	SMH60301,45112ID64A74
1C3PC-8-04	OSPP32000000027500000000000	C040AA15V	SMH60301,45112ID654
1C3PX-10-02	OSPP32000000027500000000000	C040AA16N	SMH60301,45112ID65A74
1C3PX-10-03	OSPP32000000028000000000000	C040AA18N	SMH60301,45112ID65C74
1C3PX-10-03C2	OSPP32000000028000000000000	C040AA20N	SMH60301,4511S2IZW65C74
1C3PX-10-03C2W	OSPP32000000280000000F000	C040AA20V	SMH60301,4592ID654
1C3PX-10-04	OSPP32000000280000000F000	C040AA25N	SMH60301,48112ID654
1C3PX-10-04C	OSPP320000002805000F00000	C040AA30N	SMH60301,48112ID65C74
1C3PX-10-04C2	OSPP320000002805000F00000	C040AA30V	SMH60301,4892I654
1C3PX-10-04C2W	OSPP320000002805000F0F000	C040AA45N	SMH60301,4892I65C74
1C3PX-10-05	OSPP320000002805000F0F000	C040AA45V	SMH60301,4892ID64F24
1C3PX-10-05C	OSPP32000000028800000000000	C040AA99N	SMH60301,4892ID654
1C3PX-10-06	OSPP32000000028800000000000	C040BN08N	SMH60301,4892ID65A74
1C3PX-10-06C2W	OSPP32000000029000000000000	C040BN10V	SMH60301,4892ID65C74
1C3PX-12-06	OSPP32000000029000000000000	C040BN12N	SMH60450,555112I642
1C3PX-12-06C	OSPP32000000029000001000000	C040BN12V	SMH60451,45112I652
1C3PX-12-08	OSPP32000000029000001000000	C040BN15N	SMH60451,45112IB652
1C3PX-15-08	OSPP32000000029800000000000	C040BN15V	SMH60451,45112ID65G42
1C3PX-15-08C2W	OSPP32000000029800000000000	C040BN20N	SMH60451,4511S2IB654
1C3PX-18-10	OSPP32000000030000003000000	C040BN25N	SMH60451,4511S2ID654
1C3PX-18-10C	OSPP32000000030000003000000	C040BN99N	SMH60451,4892I652
1C3PX-28-16	OSPP32000000030100000000000	C040BN99V	SMH60451,4892ID652
1C3PX-5-03C2	OSPP32000000030100000000000	C040BY12N	SMH60451,4892ID65C72
1C3PX-6-02	OSPP32000000030400001000000	C040BY20N	SMH60600,55890V65C72
1C3PX-6-02C2W	OSPP32000000030400001000000	C040BY99N	SMH60601,45112I644
1C3PX-6-03	OSPP32000000031000000000000	C040CA00080899N	SMH60601,45112I652
1C3PX-6-03C2	OSPP32000000031000000000000	C040CA00081599N	SMH60601,45112I654
1C3PX-6-03C2W	OSPP32000000032000000000000	C040CA00082099V	SMH60601,45112I65B34
1C3PX-8-03	OSPP32000000032000000000000	C040CA00089912N	SMH60601,45112I65C74
1C3PX-8-03-LPG	OSPP320000003205000F00000	C040CA00089999N	SMH60601,45112I65G44
1C3PX-8-04	OSPP320000003205000F00000	C040CA00120899N	SMH60601,45112IB654
1C3PX-8-04C	OSPP320000003205000F0F000	C040CA00121200N	SMH60601,45112IB65A74
1C3PX-8-04C2W	OSPP320000003205000F0F000	C040CA00121299N	SMH60601,45112IB65C74
1C3TX-8-03W	OSPP32000000032500000000000	C040CA00121299V	SMH60601,45112IB65D32
1C3TX-8-04W	OSPP32000000032500000000000	C040CA00121399N	SMH60601,45112ID652
1C3YX-10-03	OSPP32000000035000000000000	C040CA00121599N	SMH60601,45112ID654
1C3YX-10-03C2W	OSPP32000000035000000000000	C040CA00129999N	SMH60601,45112ID65A74
1C3YX-10-04	OSPP32000000036000000000000	C040CA00131599N	SMH60601,45112ID65C74
1C3YX-10-04C2	OSPP32000000036000000000000	C040CA00151299N	SMH60601,45112ID65M4
1C3YX-10-05	OSPP320000003765000F0F000	C040CA00151399N	SMH60601,45113MA654
1C3YX-10-05C	OSPP320000003765000F0F000	C040CA00151599N	SMH60601,4511S2I64F22
1C3YX-10-05C2	OSPP320000004225000G00000	C040CA00151899N	SMH60601,4511S2ID65A74
1C3YX-10-06	OSPP320000004225000G00000	C040CA00151899V	SMH60601,4511S2ID65C74
1C3YX-12-06	OSPP320000004800000F00000	C040CA00152099N	SMH60601,4592ID654
1C3YX-12-06C	OSPP320000004800000F00000	C040CA00159918N	SMH60601,4592ID65C74
1C3YX-12-06C2	OSPP32000000050000000000	C040CA00159999N	SMH60601,48112IB65C74
1C3YX-12-06C2W	OSPP32000000050000000000	C040CA00180099N	SMH60601,48112ID654
1C3YX-12-08	OSPP320000007800000G00000	C040CA00189999N	SMH60601,48112ID65C74
1C3YX-15-08	OSPP320000007800000G00000	C040CA00201299N	SMH60601,4811S2ID654
1C3YX-15-08C2	OSPP32000000080000000000	C040CA00202099N	SMH60601,4811S2ID65C74

1C3YX-15-08C2W	OSPP320000008000000000000	C040CA00253099N	SMH60601,4892I654
1C3YX-18-08	OSPP320000008000000F00000	C040CA00259999N	SMH60601,4892IB654
1C3YX-18-10	OSPP320000008000000F00000	C040CA00990899N	SMH60601,4892IB65C74
1C3YX-18-10C	OSPP320000100300000000000	C040CA00991899N	SMH60601,4892ID654
1C3YX-18-12	OSPP320000100300000000000	C040CA00991899V	SMH60601,4892ID65A74
1C3YX-22-12	OSPP320000100350000000000	C040CA00999999N	SMH60601,4892ID65C64
1C3YX-28-16	OSPP320000100350000000000	C040CA08000000N	SMH60601,4892ID65C74
1C3YX-6-03	OSPP320000100370000000000	C040CA08000808N	SMH60601,489S2ID654
1C3YX-6-03C	OSPP320000100370000000000	C040CA08000899N	SMH60601,489S2ID65C74
1C3YX-6-03C2	OSPP320000100440001000000	C040CA08009999N	SMH60751,45112ID65C74
1C3YX-8-03	OSPP320000100440001000000	C040CA08082020N	SMH8210038142I65A72
1C3YX-8-03C2W	OSPP320000100500000G00000	C040CA09009999N	SMH8230035142I654
1C3YX-8-04	OSPP320000100500000G00000	C040CA10001099N	SMH8230035142ID65A74
1C3YX-8-04C	OSPP320000100600000G00000	C040CA10001299N	SMH8230035192ID654
1C3YX-8-04C2	OSPP320000100600000G00000	C040CA10001300N	SMH8230035192ID65A74
1C3YX-8-04C2W	OSPP320000100650000000000	C040CA10009999N	SMH8230035192ID65M4
1C446-10-5	OSPP320000100650000000000	C040CA10109999N	SMH8230038142I64A74
1C446-12-6	OSPP320000100700000G00000	C040CA11000999N	SMH8230038142I654
1C446-15-8	OSPP320000100700000G00000	C040CA12001099N	SMH8230038142I65A72
1C446-8-4	OSPP320000100800000G00000	C040CA12001199N	SMH8230038142I65A74
1C448-10-5	OSPP320000100800000G00000	C040CA12001299N	SMH8230038142I65D54
1C448-10-6	OSPP320000100900000000000	C040CA12001599N	SMH8230038142IB64A64
1C448-12-6	OSPP320000100900000000000	C040CA12009915N	SMH8230038142IB65A74
1C448-15-8	OSPP320000101150000000000	C040CA12009999N	SMH8230038142ID64A64
1C448-8-4	OSPP320000101150000000000	C040CA12999999N	SMH8230038142ID64A74
1C455-10-5	OSPP320000101300000G00000	C040CA13009999N	SMH8230038142ID654
1C455-10-6	OSPP320000101300000G00000	C040CA13150018N	SMH8230038142ID65A74
1C455-12-6	OSPP320000101750300000000	C040CA14000000N	SMH8230038142ID65D54
1C455-12-6-SW19	OSPP320000101750300000000	C040CA14000099N	SMH823003814S2I654
1C455-6-3	OSPP320000105800000000000	C040CA14001799N	SMH823003814S2ID654
1C455-8-4	OSPP320000105800000000000	C040CA14009915N	SMH823003814S2ID65A74
1C456-6-3	OSPP320001000170000D00000	C040CA14009999N	SMH823003814S3MA654
1C546-10-4	OSPP320001000170000D00000	C040CA14149999N	SMH8230038192I654
1C546-10-5	OSPP320001000200000000000	C040CA14999999N	SMH8230038192I65A74
1C546-10-6	OSPP320001000200000000000	C040CA15000010N	SMH8230038192IB65A7M4
1C546-12-6	OSPP320001000300000000000	C040CA15000018N	SMH8230038192ID65A74
1C546-15-8	OSPP320001000300000000000	C040CA15000099N	SMH8245035142I652
1C546-18-10	OSPP320001000350000000000	C040CA15001099N	SMH824503514S2I654
1C546-22-12	OSPP320001000350000000000	C040CA15001199N	SMH8245035192I654
1C546-28-16	OSPP320001000500000000000	C040CA15001399N	SMH8245038142I652
1C546-6-4	OSPP320001000500000000000	C040CA15001599N	SMH8245038142I654
1C546-8-4	OSPP320001000500000200000	C040CA15001899N	SMH8245038142I65A72
1C548-10-4	OSPP320001000500000200000	C040CA15002099N	SMH8245038142I65A74
1C548-10-5	OSPP320001000520000000F000	C040CA15009912N	SMH8245038142IB654
1C548-10-6	OSPP320001000520000000F000	C040CA15009918N	SMH8245038142ID652
1C548-12-6	OSPP320001000600000000000	C040CA15009999N	SMH8245038142ID65A72
1C548-15-8	OSPP320001000600000000000	C040CA15151599N	SMH824503814S2ID652
1C548-18-10	OSPP320001000600001000000	C040CA15992099N	SMH824503814S2ID65A74
1C548-22-12	OSPP320001000600001000000	C040CA16991699N	SMH8245038192IB654
1C548-28-16	OSPP320001000660000000000	C040CA17009918N	SMH8256038142I654
1C548-6-4	OSPP320001000660000000000	C040CA17009999N	SMH8256038142IB65A74
1C548-8-4	OSPP320001000700000000000	C040CA17139918N	SMH8256038142ID654
1C554-8-4	OSPP320001000700000000000	C040CA18000099N	SMH8256038142ID65A74

1C555-10-4	OSPP320001000850000200000	C040CA18002099N	SMH825603814S3MB654
1C555-10-5	OSPP320001000850000200000	C040CA20002099N	SMH8256038192ID654
1C555-10-6	OSPP320001000900000000000	C040CA20002599N	SMH8260035142ID654
1C555-12-6-SW19	OSPP320001000900000000000	C040CA20009999N	SMH8260035192ID644
1C555-15-8	OSPP320001000945000G00000	C040CA25002099N	SMH8260035192ID654
1C555-18-12	OSPP320001000945000G00000	C040CA25002599N	SMH826003519S2ID654
1C555-6-3	OSPP320001000950100G00000	C040CA99001099N	SMH826003519S2ID65A74
1C555-8-4	OSPP320001000950100G00000	C040CA99001599N	SMH8260038142I654
1C556-10-4	OSPP320001001050000000000	C040CA99009999N	SMH8260038142IB654
1C556-10-4C	OSPP320001001050000000000	C040CA99139999N	SMH8260038142IB65A74
1C556-10-5	OSPP320001001050100G00000	C040CA99999999N	SMH8260038142ID652
1C556-10-6	OSPP320001001050100G00000	C040WA12001299N	SMH8260038142ID654
1C556-12-5	OSPP320001001070100G00000	C040WA99002099N	SMH8260038142ID65A62
1C556-12-6	OSPP320001001070100G00000	C04B3HZN	SMH8260038142ID65A64
1C556-6-3	OSPP320001001100000000000	C04B3HZV	SMH8260038142ID65A72
1C556-8-4	OSPP320001001100000000000	C04B3MZN	SMH8260038142ID65A74
1C558-18-12	OSPP320001001200100G00000	C050AA08N	SMH8260038142ID65M4
1C558-22-12	OSPP320001001200100G00000	C050AA10N	SMH826003814S2I65A72
1C58X-8-04	OSPP320001001415000G00000	C050AA12N	SMH826003814S2IB654
1C5NX-12-06	OSPP320001001415000G00000	C050AA13N	SMH826003814S2ID654
1C5PX-10-04	OSPP320001001500000F0F000	C050AA15N	SMH826003814S2ID65A74
1C5YX-12-06	OSPP320001001500000F0F000	C050AA16N	SMH8260038192I654
1C5YX-8-04	OSPP320001001600100G00000	C050AA18N	SMH8260038192ID654
1C646-12-5	OSPP320001001600100G00000	C050AA18V	SMH8260038192ID65A74
1C646-12-6	OSPP320001001800000000000	C050AA20N	SMH8275035192ID654
1C646-16-8	OSPP320001001800000000000	C050AA20V	SMH8275035192ID65A74
1C648-10-4	OSPP320001001950000000000	C050AA25N	SMH827503519S2ID65A74
1C648-12-5	OSPP320001001950000000000	C050AA30N	SMH8275038142ID654
1C648-12-6	OSPP320001002000000000000	C050AA45N	SMH8275038142ID65A74
1C648-14-6	OSPP320001002000000000000	C050AA99N	SMH8275038142ID65M4
1C648-16-8	OSPP320001002400000000000	C050AA99V	SMH827503814S2ID654
1C648-8-4	OSPP320001002400000000000	C050BN10N	SMH827503814S2ID65A74
1C655-12-5	OSPP320001100500000000000X	C050BN12N	SMH8275038192I654
1C655-14-6	OSPP320001100500000000000X	C050BN15N	SMH8275038192I65A74
1C655-16-8	OSPP320001101350001000000	C050BN18N	SMH8275038192IB65A74
1C655-20-12	OSPP320001101350001000000	C050BN18V	SMH8275038192ID654
1C655-8-3	OSPP320004000400000204000	C050BN25N	SMH8275038192ID65A74
1C656-10-4	OSPP320004000400000204000	C050BN99N	SMHA10030065192I644
1C656-12-6	OSPP320004000400000404000	C050BY30N	SMHA10030065192I654
1C658-10-4	OSPP320004000400000404000	C050BY99N	SMHA10030065192ID654
1C658-16-8	OSPP320004000600000004000	C050CA00001599N	SMHA10030065192ID65A74
1C68X-10-04	OSPP320004000600000004000	C050CA00002599N	SMHA10030065192ID65D54
1C68X-8-04	OSPP320004000600000404000	C050CA00080808N	SMHA10045065192ID65A74
1C6LX-12-05	OSPP320004000600000404000	C050CA00089999N	SMHA10056065192I65A74
1C6NX-10-04C	OSPP320004000600000804000	C050CA00120899N	SMHA10056065192ID654
1C6NX-12-05	OSPP320004000600000804000	C050CA00121200N	SMHA10056065192ID65A74
1C6NX-16-08	OSPP320004000700010804000	C050CA00121299N	SMHA1005606519S2ID654
1C6NX-20-10	OSPP320004000700010804000	C050CA00129999N	SMHA1005606519S2ID65A74
1C6NX-25-12	OSPP320004000800010804000	C050CA00139914N	SMHA1005606524S2ID65A74
1C6NX-30-16	OSPP320004000800010804000	C050CA00151599N	SMHA10075065192ID654
1C6NX-8-04	OSPP320004001650000704000	C050CA00152099N	SMHA10075065192ID65A74
1C6NX-8-04C	OSPP320004001650000704000	C050CA00159916N	SMHA1007506519S2ID65A74
1C943-10-4C	OSPP320004001650000804000	C050CA00159999N	SMHA11530105192I654

1C943-10-5C	OSPP320004001650000804000	C050CA00159999V	SMHA11530107242I654
1C943-10-6	OSPP320004100600000004000	C050CA00169920N	SMHA11530108192I654
1C943-10-6C	OSPP320004100600000004000	C050CA00181499N	SMHA11530108192I65A74
1C943-12-5C	OSPP320004102700000004000	C050CA00181818N	SMHA1153010819S2I654
1C943-12-6	OSPP320004102700000004000	C050CA00182099N	SMHA1153010819S2I65A74
1C943-12-6C	OSPP320010000150000000000	C050CA00200099N	SMHA11540108192I65A74
1C943-12-8	OSPP320010000150000000000	C050CA00201499N	SMHA1154010819S2ID65A74
1C943-14-6	OSPP320010000160000000000	C050CA00202099N	SMHA11556105242I65A74
1C943-14-6C	OSPP320010000160000000000	C050CA00202599N	SMHA1155610719S2I65A74
1C943-16-10	OSPP320010000300000000000	C050CA00203099N	SMHA11556107242I654
1C943-16-10C	OSPP320010000300000000000	C050CA00209999N	SMHA11556107242I65A74
1C943-16-8	OSPP320010000400000G00000	C050CA00222599N	SMHA11556108192I654
1C943-16-8C	OSPP320010000400000G00000	C050CA00250099N	SMHA11556108192I65A74
1C943-20-10	OSPP320010000410010000000	C050CA00252599N	SMHA11556108192I65M4
1C943-20-10C	OSPP320010000410010000000	C050CA00303099N	SMHA11556108192ID654
1C943-20-12	OSPP320010000410210000000	C050CA00304099N	SMHA1155610819S2I65A74
1C943-20-12C	OSPP320010000410210000000	C050CA00309999N	SMHA1155610824S2I65A74
1C943-25-12	OSPP320010000472000000000	C050CA00991299N	SMHA14220155242I654
1C943-25-12C	OSPP320010000472000000000	C050CA00991899N	SMHA14230155192I65A74
1C943-25-16	OSPP320010000500000000000	C050CA00992099N	SMHA14230155242I65A74
1C943-25-16C	OSPP320010000500000000000	C050CA00999999N	SMHA1423015524S2I65A74
1C943-30-16	OSPP320010000700000000000	C050CA08009999N	SMHA14230155282I65A74
1C943-30-16C	OSPP320010000700000000000	C050CA10001099N	SMHA14245155242I654
1C943-38-20C	OSPP320010000750000000000	C050CA10001299N	SMHA14256155242I65A74
1C943-8-4C	OSPP320010000750000000000	C050CA12000899N	SMHA1425615524S2I65A74
1C946-10-4	OSPP320010000750000200000	C050CA12001299N	SMHA601051,45112ID654
1C946-10-5	OSPP320010000750000200000	C050CA12001599N	SMHA601051,45112ID65C64
1C946-10-6	OSPP320010000800000G00000	C050CA13001520N	SMHA601051,4892ID654
1C946-12-4	OSPP320010000800000G00000	C050CA14001516N	SMHA601051,4892ID65A74
1C946-12-5	OSPP320010000800000G03000	C050CA14001516V	SMHA601051,4892ID65C74
1C946-12-6	OSPP320010000800000G03000	C050CA14159916N	SMHA601051,489S2ID65C74
1C946-12-8	OSPP320010000800100000000	C050CA15001599N	SMHA60300,55511S2ID64C72
1C946-14-4	OSPP320010000800100000000	C050CA15002099N	SMHA60301,45112I654
1C946-14-5	OSPP320010000800100G00000	C050CA15002599N	SMHA60301,45112I65C74
1C946-14-6	OSPP320010000800100G00000	C050CA15009915N	SMHA60301,45112IB65C74
1C946-14-8	OSPP320010000900100G00000	C050CA15009916N	SMHA60301,45112ID654
1C946-16-10	OSPP320010000900100G00000	C050CA15009920N	SMHA60301,45112ID65A74
1C946-16-5	OSPP320010001000000G00000	C050CA15009930N	SMHA60301,45112ID65C74
1C946-16-6	OSPP320010001000000G00000	C050CA15009999N	SMHA60301,48112ID64C74
1C946-16-8	OSPP320010001000100G00000	C050CA15151599N	SMHA60301,4811S2IB654
1C946-20-10	OSPP320010001000100G00000	C050CA15169916N	SMHA60301,4892I65F44
1C946-20-12	OSPP320010001100000000000	C050CA16002099N	SMHA60301,4892IB654
1C946-20-8	OSPP320010001100000000000	C050CA16009920N	SMHA60301,4892IB65C74
1C946-25-12	OSPP320010001300000000000	C050CA16009999N	SMHA60301,4892ID654
1C946-25-16	OSPP320010001300000000000	C050CA18001299N	SMHA60301,4892ID65C64
1C946-30-16	OSPP320010001310000000000	C050CA18001899N	SMHA60301,4892ID65C74
1C946-38-20	OSPP320010001310000000000	C050CA18002099N	SMHA60601,45110V65C74
1C946-6-4	OSPP320010001510000000000	C050CA18009919N	SMHA60601,45112I644
1C946-8-4	OSPP320010001510000000000	C050CA18009999N	SMHA60601,45112I654
1C946-8-5	OSPP320010001600000000000	C050CA20002599N	SMHA60601,45112I65B34
1C946-8-6	OSPP320010001600000000000	C050CA20009999N	SMHA60601,45112I65G44
1C948-10-4	OSPP320010001710000000000	C050CA20999999N	SMHA60601,45112IB654
1C948-10-4C	OSPP320010001710000000000	C050CA23002099N	SMHA60601,45112ID654

1C948-10-5	OSPP320010001894000000000	C050CA25002599N	SMHA60601,45112ID65A74
1C948-10-5C	OSPP320010001894000000000	C050CA25009930N	SMHA60601,45112ID65C74
1C948-10-6	OSPP320010002750000000000	C050CA30003599N	SMHA60601,45112ID65F24
1C948-12-4	OSPP320010002750000000000	C050CA99001299N	SMHA60601,4511S2IB65C74
1C948-12-5	OSPP320010100500001000000	C050CA99001812N	SMHA60601,4511S2ID65C74
1C948-12-5C	OSPP320010100500001000000	C050CA99009999N	SMHA60601,48112ID65C74
1C948-12-6	OSPP320010100600000000000	C050CA99061299N	SMHA60601,4811S2IB654
1C948-12-6C	OSPP320010100600000000000	C050CA99129920N	SMHA60601,4811S2ID654
1C948-12-8	OSPP32001010060000000F000	C050CA99151599N	SMHA60601,4811S2ID65C74
1C948-14-4	OSPP32001010060000000F000	C050CA99999999N	SMHA60601,4892I644
1C948-14-5	OSPP320010101100000000000	C050CA99999999V	SMHA60601,4892IB654
1C948-14-6	OSPP320010101100000000000	C050WA18001899N	SMHA60601,4892IB65C72
1C948-14-8	OSPP320010101150000000000	C05-12-5-10	SMHA60601,4892IB65C74
1C948-16-10	OSPP320010101150000000000	C05-12-5-10	SMHA60601,4892ID652
1C948-16-5	OSPP320010101150000F00000	C05-20-10-10	SMHA60601,4892ID654
1C948-16-6	OSPP320010101150000F00000	C05-20-10-10	SMHA60601,4892ID65A74
1C948-16-8	OSPP320010101450000000000	C05-32-12-10	SMHA60601,4892ID65C74
1C948-16-8C	OSPP320010101450000000000	C05-32-12-10	SMHA60601,489S2ID654
1C948-20-10	OSPP320100000250000000000	C05-32-12-25	SMHA60601,489S2ID65C74
1C948-20-10C	OSPP320100000250000000000	C05-32-12-25	SMHA60751,45112ID65C74
1C948-20-12	OSPP320100000320000000000	C05-50-16-25	SMHA8210038142I64A72
1C948-20-12C	OSPP320100000320000000000	C05-50-16-25	SMHA8210038142ID65A72
1C948-20-8	OSPP320100000370000000000	C05-63-16-25	SMHA8230035142ID654
1C948-25-12	OSPP320100000370000000000	C05-63-16-25	SMHA8230035192ID65A74
1C948-25-12C	OSPP320100000390001000000	C05S-12-5-4	SMHA823003519S2I65A74
1C948-25-16	OSPP320100000390001000000	C05S-12-5-4	SMHA8230038142I654
1C948-25-16C	OSPP320100000400000000000	C05S-20-10-4	SMHA8230038142I65A74
1C948-30-16	OSPP320100000400000000000	C05S-20-10-4	SMHA8230038142IB654
1C948-30-16C	OSPP320100000400000200000	C05S-32-12-5	SMHA8230038142IB65A74
1C948-38-20	OSPP320100000400000200000	C05S-32-12-5	SMHA8230038142ID652
1C948-38-20C	OSPP320100000450000600000	C05S-50-16-10	SMHA8230038142ID654
1C948-38-24	OSPP320100000450000600000	C05S-50-16-10	SMHA8230038142ID65A74
1C948-6-4	OSPP320100000490001000000	C05S-63-16-10	SMHA823003814S2I64A74
1C948-8-4	OSPP320100000490001000000	C05S-63-16-10	SMHA823003814S2I65A74
1C948-8-4C	OSPP320100000540001000000	C05S-8-4-4	SMHA823003814S2ID65A74
1C948-8-5	OSPP320100000540001000000	C05S-8-4-4	SMHA8230038192I654
1C948-8-6	OSPP320100000600001000000	C063AA00N	SMHA8230038192I65A74
1C955-10-4	OSPP320100000600001000000	C063AA10N	SMHA824503519S2I64A72
1C955-10-5	OSPP320100000620000000000	C063AA12N	SMHA8245038142I65A72
1C955-12-4C	OSPP320100000620000000000	C063AA12V	SMHA8245038142IB65A72
1C955-12-5	OSPP320100000620001000000	C063AA13N	SMHA8245038142ID65A74
1C955-12-5C	OSPP320100000620001000000	C063AA17N	SMHA8245038192I65A74
1C955-12-6	OSPP320100000650000000000	C063AA20N	SMHA824503819S2I65A74
1C955-12-6C	OSPP320100000650000000000	C063AA20V	SMHA8256038142ID65A74
1C955-14-6	OSPP320100000770001000000	C063AA25N	SMHA8260035142ID65A74
1C955-16-8	OSPP320100000770001000000	C063AA25V	SMHA8260035192I65A24
1C955-16-8C	OSPP320100000925000000000	C063AA30N	SMHA8260035192I65G44
1C955-20-12	OSPP320100000925000000000	C063AA30V	SMHA8260035192ID652
1C955-25-12	OSPP320100000950000000000	C063AA99N	SMHA8260035192ID654
1C955-30-16	OSPP320100000950000000000	C063BN00N	SMHA8260035192ID65A72
1C955-8-3	OSPP320100000950001000000	C063BN12N	SMHA8260035192ID65A74
1C955-8-4	OSPP320100000950001000000	C063BN12V	SMHA826003519S2ID65A74
1C955-8-4C	OSPP320100001070003000000	C063BN20N	SMHA8260038142I644

1C956-10-4	OSPP320100001070003000000	C063BN20V	SMHA8260038142I654
1C956-10-4C	OSPP320100001080000000000	C063BN25N	SMHA8260038142I65A74
1C956-10-5	OSPP320100001080000000000	C063BN99N	SMHA8260038142IB654
1C956-12-4	OSPP320100001400000000000	C063CA00109999N	SMHA8260038142IB65A74
1C956-12-5	OSPP320100001400000000000	C063CA00122299N	SMHA8260038142ID652
1C956-12-6	OSPP320100001450000000000	C063CA00151599N	SMHA8260038142ID654
1C956-12-6C	OSPP320100001450000000000	C063CA00152099N	SMHA8260038142ID65A74
1C956-16-8	OSPP320100001650000000000	C063CA00159922N	SMHA826003814S2IB654
1C956-25-12	OSPP320100001650000000000	C063CA00200099N	SMHA826003814S2ID654
1C956-8-3	OSPP320100001750000000000	C063CA00201825N	SMHA826003814S2ID65A62
1C956-8-4	OSPP320100001750000000000	C063CA00201899N	SMHA826003814S2ID65A64
1C958-10-4	OSPP320100001800000000000	C063CA00202099N	SMHA826003814S2ID65A72
1C958-12-6	OSPP320100001800000000000	C063CA00202299N	SMHA826003814S2ID65A74
1C958-16-8	OSPP320100002050000000000	C063CA00203099N	SMHA8260038192I654
1C958-16-8C	OSPP320100002050000000000	C063CA00209999N	SMHA8260038192IB654
1C958-20-10	OSPP320100002064000000000	C063CA00259999N	SMHA8260038192ID654
1C958-20-12	OSPP320100002064000000000	C063CA00303099N	SMHA8260038192ID65A64
1C958-25-12	OSPP320100002250000000000	C063CA00309999N	SMHA8260038192ID65A74
1C958-25-12C	OSPP320100002250000000000	C063CA00991299N	SMHA8275035192ID654
1C958-30-16	OSPP320100002250010000000	C063CA00991899N	SMHA8275038142ID652
1C95X-16-08	OSPP320100002250010000000	C063CA00991899V	SMHA8275038142ID654
1C95X-25-12	OSPP320100002300000000000	C063CA00999999N	SMHA8275038142ID65A74
1C95X-25-12C	OSPP320100002300000000000	C063CA10001300N	SMHA827503814S2ID65A74
1C970-10-6	OSPP320100002450000000000	C063CA12001599N	SMHA8275038192ID654
1C970-12-6	OSPP320100002450000000000	C063CA12999999N	SMHA8275038192ID65M4
1C970-12-6C	OSPP320100002450010000000	C063CA14001516N	SMN10
1C970-12-8	OSPP320100002450010000000	C063CA14001516V	SMN10-10MM
1C970-14-6	OSPP320100002650000000000	C063CA15002099N	SMN10-316
1C970-14-6C	OSPP320100002650000000000	C063CA15009916N	SMN20
1C970-16-10	OSPP320100002650010000000	C063CA15009916V	SMN20-.44
1C970-16-8	OSPP320100002650010000000	C063CA15009922N	SMN20-.50
1C970-16-8C	OSPP320100002750000000000	C063CA15151599N	SMN20-10MM
1C970-20-10	OSPP320100002750000000000	C063CA16000016N	SMN20-316
1C970-20-10C	OSPP320100003530000000000	C063CA17000025N	SMN20-316SOG
1C970-20-12	OSPP320100003530000000000	C063CA17009922N	SMN30
1C970-20-12C	OSPP320100003530000F00000	C063CA17009922V	SMN40
1C970-20-8	OSPP320100003530000F00000	C063CA20001825N	SMN40-316
1C970-25-10	OSPP320100100350000000000	C063CA20002099N	SMN40-316SOG
1C970-25-12	OSPP320100100350000000000	C063CA20002299N	SMN60
1C970-25-12C	OSPP320100100800000000000	C063CA20009999N	SMN60-316
1C970-25-16	OSPP320100100800000000000	C063CA25002599N	SMN60-316SOG
1C970-25-16C	OSPP320100102600000000000	C063CA25009999N	SMN80
1C970-30-16	OSPP320100102600000000000	C063CA30000099N	SMR-1L
1C970-30-16C	OSPP320110000750000000000	C063CA99002099N	SMSQMICRO3010RING
1C970-38-20C	OSPP320110000750000000000	C063CA99002099V	SN6-BAR-HANDLE
1C970-8-6	OSPP320110001734000000000	C063CA99009999N	SNBFH4FH4
1C971-16-8	OSPP320110001734000000000	C063CA99999999N	SNBFH4MH4
1C971-20-10	OSPP320110001954000000000	C063WA20002099N	SNBMH6MH4
1C971-20-12	OSPP320110001954000000000	C06B3HZN	SNFT24/10
1C971-25-12	OSPP320110002050000000000	C080AA20N	SNSA-A-6 M280
1C971-25-16	OSPP320110002050000000000	C080AA20V	SNSA-AB-6 M280
1C971-30-16	OSPP320110002064000000000	C080AA22N	SNT15/2S
1C971-38-20	OSPP320110002064000000000	C080AA30N	SO10189

1C971-38-24	OSPP320110002064010000000	C080AA99N	SO20006
1C973-20-12	OSPP320110002064010000000	C080BN15N	SO20022
1C973-25-12	OSPP320110002284000000000	C080BN20N	SO20032
1C973-25-12SW41	OSPP320110002284000000000	C080BN25N	SO50058
1C973-25-16	OSPP320110002420000000000	C080BN25V	SO70031
1C973-30-16	OSPP320110002420000000000	C080BN99N	SO70035
1C973-30-20	OSPP320200000125000000000	C080CA00101099N	SO70053
1C973-38-20	OSPP320200000125000000000	C080CA00209999V	SO70081
1C973-38-24	OSPP320200000125000000000X	C080CA00259999N	SOX20SBXMXX
1C977-16-8	OSPP320200000125000000000X	C080CA00303099N	SP05/015/DV
1C977-20-10	OSPP320200000200000200000	C080CA00993099N	SP05/025
1C977-20-12	OSPP320200000200000200000	C080CA00993099V	SP05/025/DV
1C977-25-12	OSPP320200000250000000000	C080CA00999999N	SP05/050
1C977-25-16	OSPP320200000250000000000	C080CA08001299N	SP05/050/DV
1C977-30-16	OSPP320200000365000000000	C080CA12122099N	SP05/075/DV
1C977-38-20	OSPP320200000365000000000	C080CA15002599N	SP05/100
1C978-20-12	OSPP320200000400000000000	C080CA15151599N	SP05/100/DV
1C978-25-12	OSPP320200000400000000000	C080CA18001899N	SP06/025
1C978-30-16	OSPP320200000420000000000	C080CA22002599N	SP06/025/DV
1C978-30-20	OSPP320200000420000000000	C080CA25002599N	SP06/050
1C978-38-20	OSPP32020000042000000F000	C080CA25009999N	SP06/050/DV
1C978-38-24	OSPP32020000042000000F000	C080CA99000000N	SP06/075
1C979-25-12	OSPP320200000420000F00000	C080CA99000899N	SP06/075/DV
1C979-30-16	OSPP320200000420000F00000	C080CA99009999N	SP06/100
1C979-38-20	OSPP320200000420000F0F000	C080CA99999999N	SP06/100/DV
1C98X-10-04	OSPP320200000420000F0F000	C08-C2-FKG0	SP06/100/K+S
1C98X-10-04-6V	OSPP320200000550001000000	C08-C2-FKG0	SP06/150
1C98X-10-04C	OSPP320200000550001000000	C0D1200-50	SP06/150/DV
1C98X-12-04	OSPP320200000600000000000	C0D1200-50	SP06/225
1C98X-12-05	OSPP320200000600000000000	C0D1200-50S	SP06/225/DV
1C98X-12-06	OSPP320200000600000200000	C0D1200-50S	SP08/025
1C98X-12-06C	OSPP320200000600000200000	C0D300-40	SP08/025/DV
1C98X-12-06C-6V	OSPP320200000600001000000	C0D300-40	SP08/025/DVS
1C98X-14-06	OSPP320200000600001000000	C0D300-40+B00	SP08/025/K+S
1C98X-14-06C	OSPP320200000610001000000	C0D300-40+B00	SP08/025/SV
1C98X-16-08	OSPP320200000610001000000	C0D300-40S	SP08/025S_01
1C98X-6-04	OSPP320200000650000000000	C0D300-40S	SP08/025S_04
1C98X-8-025	OSPP320200000650000000000	C0D600-50	SP08/0375/DV
1C98X-8-025C	OSPP320200000690000000000	C0D600-50	SP08/0375/SV
1C98X-8-04	OSPP320200000690000000000	C0D600-50S	SP08/050
1C98X-8-04-6V	OSPP320200000710000000000	C0D600-50S	SP08/050/DV
1C98X-8-04C	OSPP320200000710000000000	C0P160-50S	SP08/050/K+S
1C99X-12-06	OSPP320200000770001000000	C0P160-50S	SP08/050/K+SS
1C99X-14-06	OSPP320200000770001000000	C0P160-80S	SP08/050/K+SS_02
1C99X-14-06C	OSPP320200000800000000000	C0P160-80S	SP08/050/SV
1C99X-16-08	OSPP320200000800000000000	C0P2500-100S	SP08/050S_02
1C9BL-14-06	OSPP320200000880000000000	C0P2500-100S	SP08/050S_03
1C9BL-14-08	OSPP320200000880000000000	C0P2500-60	SP08/050S_06
1C9BL-16-06	OSPP320200000880001000000	C0P2500-60	SP08/075
1C9BL-16-08	OSPP320200000880001000000	C0P2500-60S	SP08/075/DV
1C9BL-16-08C4542	OSPP320200000900000000000	C0P2500-60S	SP08/075/DVS_03
1C9BL-25-12	OSPP320200000900000000000	C0P2500-80	SP08/075/DVS_05
1C9BS-10-04	OSPP320200000950000000000	C0P2500-80	SP08/075/DVS_07

1C9BS-16-04	OSPP320200000950000000000	C0P300-50S	SP08/075/K+S
1C9BS-16-08	OSPP320200001100000000000	C0P300-50S	SP08/075/K+SS_02
1C9CX-16-08W	OSPP320200001100000000000	C0P300-80S	SP08/075S_01
1C9EX-6-012	OSPP320200001150000200000	C0P300-80S	SP08/100
1C9EX-6-012C	OSPP320200001150000200000	C0P300-80S+B00	SP08/100/DV
1C9EX-6-012S	OSPP320200001170000000000	C0P300-80S+B00	SP08/100/K+S
1C9EX-6-016	OSPP320200001170000000000	C0P-C0D-P01	SP08/100S_04
1C9EX-6-025	OSPP320200001250000000000	C0P-C0D-P01	SP08/150
1C9EX-8-012	OSPP320200001250000000000	C0P-C0D-P02	SP08/150/DV
1C9EX-8-012S	OSPP320200001300000000000	C0P-C0D-P02	SP08/150/K+S
1C9EX-8-02	OSPP320200001300000000000	C100AA20N	SP08/225
1C9EX-8-025	OSPP320200001450001000000	C100AA25N	SP08/225/DV
1C9EX-8-025C	OSPP320200001450001000000	C100AA99N	SP08/225/K+S
1C9EX-8-025S	OSPP320200001500000701000	C100BN08N	SP10
1C9JX-16-08W	OSPP320200001500000701000	C100BN25N	SP10/015/DVS_01
1C9JX-25-12W	OSPP320200001542000000000	C100CA00101099N	SP10/025
1C9JX-30-16W	OSPP320200001542000000000	C100CA00202099N	SP10/025/DV
1C9KX-10-04W	OSPP320200001600000000000	C100CA00303099N	SP10/025/K+S
1C9KX-14-06W	OSPP320200001600000000000	C100CA00359999N	SP10/050
1C9KX-16-05W	OSPP320200001725000000000	C100CA00403099N	SP10/050/DV
1C9KX-16-08W	OSPP320200001725000000000	C100CA00404099N	SP10/050/K+S
1C9KX-30-16W	OSPP320200001750001000000	C100CA00993099N	SP10/050S
1C9KY-14-05	OSPP320200001750001000000	C100CA00999999N	SP10/075
1C9KY-16-05	OSPP320200001785001000000	C100CA15001599N	SP10/075/DV
1C9LX-10-04	OSPP320200001785001000000	C100CA15151599N	SP10/075/K+S
1C9LX-10-04W	OSPP320200001800000000000	C100CA15991500N	SP10/075S
1C9LX-12-06	OSPP320200001800000000000	C100CA20009999N	SP10/100
1C9LX-14-05	OSPP320200001990000000000	C100CA99999999N	SP10/100/DV
1C9LX-14-06	OSPP320200001990000000000	C1020S	SP10/100/K+S
1C9LX-14-06C	OSPP320200002240000000000	C103E-12	SP10/150
1C9LX-14-06W	OSPP320200002240000000000	C103E-13	SP10/150/DV
1C9LX-16-03W	OSPP320200002290000000000	C103F-13	SP10/150/K+S
1C9LX-16-04W	OSPP320200002290000000000	C10A1304	SP10/225
1C9LX-16-05	OSPP320200002540001000000	C10A1304	SP10/225/DV
1C9LX-16-05W	OSPP320200002540001000000	C10A1317	SP10/225/K+S
1C9LX-16-06	OSPP320200002620000000000	C10A1317	SP11D2-Z-5268
1C9LX-16-08	OSPP320200002620000000000	C10BL	SP12/025
1C9LX-16-08C	OSPP320200003040001000000	C10BU	SP12/025/DV
1C9LX-16-08W	OSPP320200003040001000000	C10DEC101E16/0L0800	SP12/025/K+S
1C9LX-20-06-WS	OSPP320200003100000G00000	C10DEC101E16/0N0800	SP12/0375/DV
1C9LX-25-12	OSPP320200003100000G00000	C10DEC101E16/0N1300	SP12/050
1C9LX-25-12C	OSPP320200003350001000000	C10DEC101E16/0N1500	SP12/050/DV
1C9LX-25-12W	OSPP320200003350001000000	C10DEC101E16/0S1200X425	SP12/050/K+S
1C9LX-30-16	OSPP320200003740000000000	C10DEC101E16/0S9900	SP12/075
1C9LX-30-16W	OSPP320200003740000000000	C10DEC101E16/0S9900X425	SP12/075/DV
1C9LX-8-025	OSPP320200003940000G00000	C10DEC101E16/0U0800	SP12/075/K+S
1C9MX-16-08W	OSPP320200003940000G00000	C10DEC101E16/0U1000X425	SP12/100
1C9NX-10-04	OSPP320200004090000000000	C10DEC101E16/0U1300	SP12/100/DV
1C9NX-10-04C	OSPP320200004090000000000	C10DEC101E25/0L1200	SP12/100/K+S
1C9NX-12-05	OSPP320200004255000000000	C10DEC101E25/0L9900	SP12/150
1C9NX-12-05-6V	OSPP320200004255000000000	C10DEC101E25/0N1500	SP12/150/DV
1C9NX-12-05C	OSPP320200100500000000000	C10DEC101E25/0S0800	SP12/150/K+S
1C9NX-12-06	OSPP320200100500000000000	C10DEC101E25/0S1200	SP12/225

1C9NX-12-06C	OSPP320200102000000G00000	C10DEC101E25/0U1500X425	SP12/225/DV
1C9NX-14-06	OSPP320200102000000G00000	C10DEC101E25/0U2000	SP12/225/K+S
1C9NX-14-06-6V	OSPP320201000150000000000	C10DEC101E32/0N2000	SP16/025/DV
1C9NX-16-08	OSPP320201000150000000000	C10DEC101E32/0S1500X425	SP16/050
1C9NX-16-08-6V	OSPP320201000207000000000	C10DEC101E32/0S2000	SP16/050/DV
1C9NX-16-08C	OSPP320201000207000000000	C10DEC101E32/0S9900	SP16/075
1C9NX-16-08C-6V	OSPP320201000400000200000	C10DEC101E32/0S9900X425	SP16/075/DV
1C9NX-20-10	OSPP320201000400000200000	C10DEC101E32/0U0800	SP16/100
1C9NX-20-10-6V	OSPP320201000430000000000	C10DEC101E32/0U1200	SP16/100/DV
1C9NX-20-10C	OSPP320201000430000000000	C10DEC101E32/0U1500	SP16/150
1C9NX-25-12	OSPP32020100043000000F000	C10DEC101E32/0U1500X425	SP16/150/DV
1C9NX-25-12-6V	OSPP32020100043000000F000	C10DEC101E32/0U9900	SP16/225
1C9NX-25-12C	OSPP320201000500000400000	C10DEC101E32/0U9900X425	SP16/225/DV
1C9NX-25-16	OSPP320201000500000400000	C10DEC101E40/0N2000	SP20
1C9NX-30-16	OSPP320201000520000000000	C10DEC101E40/0N9900	SP20
1C9NX-30-16-6V	OSPP320201000520000000000	C10DEC101E40/0S0800	SP20-316SOG
1C9NX-30-16C	OSPP320201000600000000000	C10DEC101E40/0S1000	SP20D05
1C9NX-38-20	OSPP320201000600000000000	C10DEC101E40/0S1200	SP20D08
1C9NX-38-20C	OSPP320201000600000400000	C10DEC101E40/0S1400	SP20D09
1C9NX-6-04	OSPP320201000600000400000	C10DEC101E40/0S1500	SP25N4-4F
1C9NX-8-04	OSPP320201000660001000000	C10DEC101E40/0U1500	SP30
1C9NX-8-04-6V	OSPP320201000660001000000	C10DEC101E40/0U9900X425	SP40
1C9NX-8-04C	OSPP320201000800000000000	C10DEC101E50/0L2500	SP40-316SOG
1C9PC-10-04	OSPP320201000800000000000	C10DEC101E50/0N1200	SP40-HC
1C9PC-12-05	OSPP320201000850001000000	C10DEC101E50/0N1800	SP60
1C9PC-12-06	OSPP320201000850001000000	C10DEC101E50/0S1200	SP602
1C9PC-14-06	OSPP320201001100000000000	C10DEC101E50/0S2500	SP604
1C9PC-16-08	OSPP320201001100000000000	C10DEC101E50/0U2500	SP606
1C9PC-20-10	OSPP320201001100001000000	C10DEC101E50/0U3000	SP80
1C9PX-10-04	OSPP320201001100001000000	C10DEC101E50/0U9900	SP804
1C9PX-12-05	OSPP320201001150000400000	C10DEC101E50/0U9900X425	SP806
1C9PX-12-06	OSPP320201001150000400000	C10DEC101E63/0L3000	SPA.1731.10.10
1C9PX-14-06	OSPP320201001330001000000	C10DEC101E63/0N2000	SPA.1731.10.5
1C9PX-16-08	OSPP320201001330001000000	C10DEC101E63/0N9900	SPA.1731.10.5N
1C9PX-16-08C	OSPP320201001425001000000	C10DEC101E63/0S2000	SPA.1731.40.10
1C9PX-20-10	OSPP320201001425001000000	C10DEC101E63/0S9900	SPA.1731.40.5
1C9PX-25-12	OSPP320201001450001000000	C10DEC101E63/0U3000	SPA1234
1C9PX-30-16	OSPP320201001450001000000	C10DEC101E63/0U9900	SPA1734
1C9PX-6-03	OSPP320201001900000000000	C10DFC123E16/0S1200999900	SPARE_KIT_BASE_M23
1C9PX-6-04	OSPP320201001900000000000	C10DFC123E25/0N1010101000	SPARE_KIT_BASE_MC17
1C9PX-8-03	OSPP320210000450000000000	C10DFC123E25/0N9908990800	SPARE_KIT_BASE_MC23
1C9PX-8-03-6V	OSPP320210000450000000000	C10DFC123E25/0S0099999900	SPC0601P10CB1
1C9PX-8-03C2	OSPP320210000600000000000	C10DFC123E25/0S1010101000	SPC14571X
1C9PX-8-04	OSPP320210000600000000000	C10DFC123E25/0U1000109900	SPC1VZX
1C9RS-16-08	OSPP320210000950000000000	C10DFC123E25/0U1200159900	SPC1X
1C9RX-10-04	OSPP320210000950000000000	C10DFC123E32/0S0099999900	SPC24571X
1C9RX-12-05	OSPP320210001000000000000	C10DFC123E32/0U1500150000	SPC2VZX
1C9RX-8-04	OSPP320210001000000000000	C10DFC123E40/0U1500189900	SPC2X
1C9TX-16-025W	OSPP320210100500001000000	C10DGC101E100/0U9900	SPC34571X
1C9TX-16-02W	OSPP320210100500001000000	C10DGC101E80/0U9900	SPC3VZX
1C9TX-16-03W	OSPP320210100750000000000	C10G	SPC3X
1C9TX-16-04W	OSPP320210100750000000000	C10R	SPC44571X
1C9TX-16-05W	OSPP320210101525000000000	C10W	SPC4VZX

1C9YX-10-04	OSPP32021010152500000000	C10Y	SPC4X
1C9YX-10-04C	OSPP32021010262500000000	C1119P	SPC5X
1C9YX-12-05	OSPP32021010262500000000	C1119P	SPC6X
1C9YX-14-06	OSPP320212000450000A00000	C111C2	SPC7X
1C9YX-16-08	OSPP320212000450000A00000	C111C2	SPC8X
1C9YX-16-08C	OSPP32030000106000000F000	C111P0	SPD16NS
1C9YX-20-10	OSPP32030000106000000F000	C111P0	SPD16NS-R54
1C9YX-20-10-6V	OSPP32030000106000060F000	C111P3	SPD16NS-R54-K006
1C9YX-25-12	OSPP32030000106000060F000	C111P3	SPD214M910
1C9YX-25-12C	OSPP32030000106001000F000	C111Q3	SPD218M910
1C9YX-30-16-6V	OSPP32030000106001000F000	C111Q3	SPD218M910X5419
1C9YX-8-03	OSPP32030000106001060F000	C117F-13	SPD218M910X680
1C9YX-8-04	OSPP32030000106001060F000	C117H-11	SPD22B910
1CA26-10-5	OSPP32030000127501000F000	C117H-12	SPD23B910
1CA26-10-6	OSPP32030000127501000F000	C117L-13	SPD23B910XG023
1CA26-12-6	OSPP32030000131000060F000	C11A33	SPD23BA910
1CA26-12-8	OSPP32030000131000060F000	C11A33	SPD24B910
1CA26-15-8	OSPP32030000131001000000	C1200B	SPD2NS
1CA26-18-10	OSPP32030000131001000000	C1200B20	SPD316B960
1CA26-18-12	OSPP32030000131001000F000	C1200S	SPD316B960XG021
1CA26-22-12	OSPP32030000131001000F000	C1200S20	SPD33B920
1CA26-28-16	OSPP32030000131001060000	C1200S65	SPD34B920
1CA26-28-20	OSPP32030000131001060000	C1220S	SPD34B920X680
1CA26-35-20	OSPP32030000131001060F000	C1220S65	SPD36B920
1CA26-42-24	OSPP32030000131001060F000	C12BL	SPD46B910
1CA26-6-4	OSPP32030000152501000000	C12BU	SPD48B910
1CA26-8-4	OSPP32030000152501000000	C12G	SPD48B910XG018
1CA43-10-4C	OSPP32030000152501000F000	C12R	SPD48BA910
1CA43-10-5C	OSPP32030000152501000F000	C12Y	SPD5NS
1CA43-10-6	OSPP32030000152501060F000	C134D-11	SPD608B930XG025
1CA43-10-6C	OSPP32030000152501060F000	C134D-12	SPD612B930
1CA43-12-5C	OSPP32030000171001000000	C134D-13	SPD8NC
1CA43-12-6	OSPP32030000171001000000	C134F-13	SPD8NS
1CA43-12-6C	OSPP32030000171001000F000	C134J-13	SPDP-A
1CA43-15-8	OSPP32030000171001000F000	C13DEC107E32/0U99009900	SPEAC4-4F
1CA43-15-8C	OSPP32030000171001060000	C14BL	SPEAN12-12F
1CA43-18-10	OSPP32030000171001060000	C14BU	SPEAN4-4M
1CA43-18-10C	OSPP32030000201001000000	C14G	SPHC12-12F
1CA43-18-12	OSPP32030000201001000000	C14R	SPHC12-12FE
1CA43-22-10	OSPP32030000201001000F000	C14W	SPHC12-12FV
1CA43-22-10C	OSPP32030000201001000F000	C150-12	SPHC12-12RP
1CA43-22-12	OSPP32030000221000060F000	C153A-12	SPHC12-12RPV
1CA43-22-12C	OSPP32030000221000060F000	C153A-13	SPHC16-16F
1CA43-28-16	OSPP32030000221001000000	C155A-11	SPHC24-24F
1CA43-28-16C	OSPP32030000221001000000	C1600B65	SPHC32-32F
1CA43-35-16	OSPP32030000221001000F000	C1600S	SPHC4-4F
1CA43-35-20C	OSPP32030000221001000F000	C1600S20	SPHC4-4FM
1CA43-6-4C	OSPP32030000221001060000	C1600S35	SPHC4-4FSL
1CA43-8-4C	OSPP32030000221001060000	C1600S65	SPHC4-4FV
1CA46-10-4	OSPP32030000221001060F000	C1620S	SPHC4-4FVSL
1CA46-10-5	OSPP32030000221001060F000	C165-12	SPHC4-4RP
1CA46-10-6	OSPP32030000222501060F000	C176-12	SPHC6-6F
1CA46-12-4	OSPP32030000222501060F000	C176A-12	SPHC6-6FSL

1CA46-12-5	OSPP320300002610010000000	C18-02-FKG0	SPHC6-6FV
1CA46-12-6	OSPP320300002610010000000	C18-02-FKG0	SPHC6-6FVSL
1CA46-12-8	OSPP320300000261001000F000	C18-04-FG00	SPHC6-6RP
1CA46-15-10	OSPP320300000261001000F000	C18-04-FG00	SPHC6-6RPV
1CA46-15-6	OSPP320300000261001060F000	C18-04-FHG0	SPHC8-8F
1CA46-15-8	OSPP320300000261001060F000	C18-04-FHG0	SPHC8-8FE
1CA46-18-10	OSPP320300000301000060F000	C18-04-FKG0	SPHC8-8FSL
1CA46-18-12	OSPP320300000301000060F000	C18-04-FKG0	SPHC8-8FV
1CA46-18-6	OSPP320300003010010000000	C188-12	SPHC8-8RP
1CA46-18-8	OSPP320300003010010000000	C188A-12	SPHC8-8RPSL
1CA46-22-10	OSPP320300000301001000F000	C189-13	SPHC8-8RPV
1CA46-22-12	OSPP320300000301001000F000	C18-C2-FGG0	SPHN12-12F
1CA46-22-16	OSPP320300003010010600000	C18-C2-FGG0	SPHN12-12RP
1CA46-28-12	OSPP320300003010010600000	C18-C2-FK00	SPHN16-16F
1CA46-28-16	OSPP320300000301001060F000	C18-C2-FK00	SPHN16-16RP
1CA46-35-16	OSPP320300000301001060F000	C18-C4-FGG0	SPHN20-20F
1CA46-35-20	OSPP320310002210010600000	C18-C4-FGG0	SPHN24-24F
1CA46-6-4	OSPP320310002210010600000	C18DB107E25/0U99009912	SPHN24-24RP
1CA46-8-4	OSPP320400002010000000000	C18DB107E50/0S20002000	SPHN32-32F
1CA46-8-5	OSPP320400002010000000000	C18DB107E50/0S99009900	SPHN4-2M
1CA46-8-6	OSPP320410001000000200000	C18DB107E50/0U99009900	SPHN4-4F
1CA48-10-4	OSPP320410001000000200000	C18DB107E63/0S30003000	SPHN4-4M
1CA48-10-4C	OSPP320800001705000000000	C18DB107E63/0S30303000	SPHN6-6F
1CA48-10-5	OSPP320800001705000000000	C18DBN112E25/0U12001200	SPHN6-6M
1CA48-10-5C	OSPP320810000480000000000	C18DEC107E25/0U12000814	SPHN6-6RP
1CA48-10-6	OSPP320810000480000000000	C18DEC107E25/0U99009900	SPHN8-8F
1CA48-10-6C	OSPP320810000500000B00000	C18DEC107E25/0U99009912	SPHN8-8M
1CA48-12-4	OSPP320810000500000B00000	C18DEC107E32/0U12001200	SPHN8-8RP
1CA48-12-5	OSPP320814000600000000000	C18DEC107E32/0U15001500	SPL4400
1CA48-12-5C	OSPP320814000600000000000	C18DEC107E32/0U15151515	SPL6600
1CA48-12-6	OSPP320814001050000000000	C18DEC107E40/0U10001000	SPL8800
1CA48-12-6C	OSPP320814001050000000000	C18DEC107E40/0U25002500	SPP10M12B910
1CA48-12-8	OSPP320A00000100000000000	C18DEC107E40/0U99009900	SPP10R12B910
1CA48-15-10	OSPP320A00000100000000000	C18DEC107E50/0S25002500	SPP3M4B910
1CA48-15-6	OSPP320A00000240001000000	C18DEC107E50/0S99009999	SPP3M6B910
1CA48-15-8	OSPP320A00000240001000000	C18DEC107E50/0S99999900	SPP3R6B9
1CA48-15-8C	OSPP320A00000250000300000	C18DEC107E50/0U99009900	SPP6M8B910
1CA48-18-10	OSPP320A00000250000300000	C18DEC107E63/0S20202020	SPP6R10B9
1CA48-18-10C	OSPP320A00000300000000000	C18DEC107E63/0U30003000	SPR-375-2-SS
1CA48-18-12	OSPP320A00000300000000000	C18DEC107E63/0U30003030	SPR-375-2-SS
1CA48-18-6	OSPP320A00000300001000000	C190-12	SPR-376-1-SS
1CA48-18-8	OSPP320A00000300001000000	C190-13	SPR-376-1-SS
1CA48-22-10	OSPP320A00000350000200000	C1A125ZNMK2	SPR-388-1-SS
1CA48-22-12	OSPP320A00000350000200000	C1B125WNMK2	SPR-388-1-SS
1CA48-22-12C	OSPP320A00000360001000000	C1B125Z5-120NMK2	SPRB010E10N
1CA48-22-16	OSPP320A00000360001000000	C1B125ZNMK2	SPRB010E15M
1CA48-28-12	OSPP320A00000390000000000	C1B300ZNMK2	SPRB910E15M
1CA48-28-16	OSPP320A00000390000000000	C1C125Z1-19NMK2	SPRC210E32M
1CA48-28-16C	OSPP320A00000400000000000	C1C125ZNMK2	SPRD210P25N
1CA48-28-20	OSPP320A00000400000000000	C1CA-E32/2-99	SPRD510P20N
1CA48-35-16	OSPP320A00000400100000000	C1CA-E32/2T00	SPRD510P20S
1CA48-35-20	OSPP320A00000400100000000	C1DB101E16/0L9900	SPRE510P15N
1CA48-35-20C	OSPP320A00000500000000000	C1DB101E16/0S9900	SPRE510P15R

1CA48-42-24	OSPP320A00000500000000000	C1DB101E25/0S3000	SPRE510P20N
1CA48-42-24C	OSPP320A00001000000000000	C1DB101E32/0L9900	SPRE510P20U
1CA48-6-4	OSPP320A00001000000000000	C1DB101E40/0L9900	SPRE510P32N
1CA48-6-4C	OSPP320A00001000000800000	C1DB101E63/0L9900	SPRE510P32T
1CA48-8-4	OSPP320A00001000000800000	C1DB101E63/0S9900	SPS2021
1CA48-8-4C	OSPP320A00001050000000000	C1DB101E80/0L9900	SPS2061
1CA48-8-5	OSPP320A00001050000000000	C1DB101E80/0S9900	SP-SM/20
1CA48-8-6	OSPP320A00001100000000000	C2000S	SP-SM/40
1CA54-12-6	OSPP320A00001100000000000	C2000S65	SPZB030E06M
1CA54-6-3	OSPP320A00001500000G00000	C200B	SPZBE1010E16L
1CA54-8-4	OSPP320A00001500000G00000	C200S	SPZBE1010E16N
1CA55-10-4	OSPP320A00001500001000000	C200S65	SPZBE1010E16S
1CA55-10-4C	OSPP320A00001500001000000	C200S65V	SPZBE1010E25N
1CA55-10-5	OSPP320A00001600000000000	C2020S	SPZBE1010E25S
1CA55-10-5C	OSPP320A00001600000000000	C20-40/131888	SPZBE1010E25U
1CA55-10-6	OSPP320A00001810000000000	C20-40/131888	SPZBE1010E32N
1CA55-10-6C	OSPP320A00001810000000000	C222P3	SPZBE1010E32U
1CA55-12-5	OSPP320A00002300000200000	C222P3	SPZBE1040E32N
1CA55-12-6	OSPP320A00002300000200000	C222Q3	SPZBE1080E16U
1CA55-12-6-6V	OSPP320A00002500000G00000	C222Q3	SR1-02-JA00
1CA55-12-6C	OSPP320A00002500000G00000	C2400S	SR1-02-JA00
1CA55-15-6	OSPP320A00003000000G00000	C2400S20	SR1-C2-KA00
1CA55-15-8	OSPP320A00003000000G00000	C2420S	SR1-C2-KA00
1CA55-15-8-6V	OSPP320A00005300000200000	C2420S20	SR1-C2-LA00
1CA55-15-8C	OSPP320A00005300000200000	C-25	SR1-C2-LA00
1CA55-18-12	OSPP320A00005500200300000	C26-03-000	SR1-C2-VA00
1CA55-22-12	OSPP320A00005500200300000	C26-03-000	SR1-C2-VA00
1CA55-28-16	OSPP320A00105000000000000	C26-04-FG0	SR2-04-LA00
1CA55-6-3	OSPP320A00105000000000000	C26-04-FG0	SR2-04-LA00
1CA55-6-3C	OSPP320A00105800000000000	C26-C4-000	SR2-04-LAS0
1CA55-8-4	OSPP320A00105800000000000	C26-C4-000	SR2-04-LAS0
1CA55-8-4C	OSPP320A01000410001A00000	C26-C4-F00	SR2-04-MA00
1CA56-10-4	OSPP320A01000410001A00000	C26-C4-F00	SR2-04-MA00
1CA56-10-5	OSPP320A01000870000300000	C28-04-FGG0	SR2-C4-LA00
1CA56-10-6	OSPP320A01000870000300000	C28-04-FGG0	SR2-C4-LA00
1CA56-12-5	OSPP320A01002000000000000	C28-04-FHG0	SR2-C4-MA00
1CA56-12-6	OSPP320A01002000000000000	C28-04-FHG0	SR2-C4-MA00
1CA56-12-6C	OSPP32100000570000000000	C28-06-FLG0	SR2-C4-XA00
1CA56-15-8	OSPP32100000570000000000	C28-06-FLG0	SR2-C4-XA00
1CA56-18-10	OSPP32100000135000000000	C284-2007	SR2-C4-YA00
1CA56-22-12	OSPP32100000135000000000	C284-2007	SR2-C4-YA00
1CA56-6-3	OSPP32100010103500000000	C28-C3-FKG0	SR-32/63-53
1CA56-6-4	OSPP32100010103500000000	C28-C3-FKG0	SR-32/63-53
1CA56-8-4	OSPP32100010153000000000	C28-C4-FG00	SR542RN18DW
1CA56-8-4C	OSPP32100010153000000000	C28-C4-FG00	SR542RN18DW
1CA58-10-6	OSPP32100400136001086400 0	C28-C4-FK00	SRA16X
1CA58-12-6	OSPP32100400136001086400 0	C28-C4-FK00	SRA20X
1CA58-15-8	OSPP32101010081500000800 0	C28-C6-FK00	SRA47X
1CA58-18-10	OSPP32101010081500000800 0	C28-C6-FK00	SRC-32/63-59
1CA58-22-12	OSPP32101010103500000800 0	C28-C6-FLG0	SRC-32/63-59
1CA58-22-12C	OSPP32101010103500000800 0	C28-C6-FLG0	SRL1205QLBG5GG161
1CA58-28-16	OSPP32110000105000000000	C2A125ZNMK2	SRL1210QLBG5GG161
1CA58-28-16C	OSPP32110000105000000000	C2B125ZNMK2	SRL1210QLBPGG161

1CA58-8-4	OSPP32180000127000000000	C31-06-000	SRL1210QLBPGG16K
1CA64-22-12C	OSPP32180000127000000000	C31-06-000	SRL1220QLBPGG161
1CA70-10-6	OSPP323000001900002A0000Y	C3200S	SRL2210QLBG5G2G201
1CA70-10-6C	OSPP323000001900002A0000Y	C333-050	SRL2210QLBPG2G201
1CA70-12-6	OSPP32470110020000000000	C333-050	SRP-96-003
1CA70-12-6C	OSPP32470110020000000000	C35G01FRLAHCA	SRP-96-003
1CA70-15-10	OSPP32470110020000000F000	C35G01FRLAHCA	SRP-96-019
1CA70-15-8	OSPP32470110020000000F000	C35G02BLAHCA	SRP-96-019
1CA70-15-8C	OSPP32471010082000000000	C35G02BLAHCA	SRP-96-020
1CA70-18-10	OSPP32471010082000000000	C39-08-FLG0	SRP-96-020
1CA70-18-10C	OSPP32600000040000020000	C39-08-FLG0	SRS22
1CA70-18-12	OSPP32600000040000020000	C3938-3	SRX21KXXRXX
1CA70-18-8	OSPP32600000050000000000	C39-C8-FL00	SRX39KXXRXX
1CA70-22-10	OSPP32600000050000000000	C39-C8-FL00	SRX74KXXRXX
1CA70-22-12	OSPP32600000070000000000	C3A025ZN	SRX93KXXRXX
1CA70-22-12C	OSPP32600000070000000000	C3AB-10-04	SRZ1ZN
1CA70-28-12	OSPP32600000090000020000	C3AB-10-04C	SRZ2ZN
1CA70-28-16	OSPP32600000090000020000	C3AB-10-05	SS0600N
1CA70-28-16C	OSPP32600000100000020000	C3AB-12-06	SS0800N
1CA70-35-16	OSPP32600000100000020000	C3AB-15-06	SS1000N
1CA70-35-20C	OSPP32600000170000000000	C3AB-6-025	SS1040N
1CA71-15-8	OSPP32600000170000000000	C3AB-8-04	SS1200N
1CA71-18-10	OSPP32600010065000000000	C3B025WN	SS1520N
1CA71-22-10	OSPP32600010065000000000	C3B025ZN	SS1600N
1CA71-22-12	OSPP32600100056000020000	C3BMB10-1/4	SS2000N
1CA71-35-16	OSPP32600100056000020000	C3BMB10-3/8	SS23J-NB-H24SP
1CA71-35-20	OSPP32600110025000000000	C3BMB12-1/2	SS23J-NB-H24SP
1CA71-42-24	OSPP32600110025000000000	C3BMB12-3/8	SS2400N
1CA73-35-20	OSPP32600110025000100000	C3BMB14-1/2	SS24J-NB-H24SP
1CA73-42-24	OSPP32600110025000100000	C3BMB14-3/8	SS24J-NB-H24SP
1CA93N-15-8-6V	OSPP32600110025001100000	C3BMB16-1/2	SS2600-1/2F
1CAEX-6-012	OSPP32600110025001100000	C3BMB18-1/2	SS2600-1/2F-CE
1CAEX-6-016	OSPP32600110121500000000	C3BMB22-3/4	SS2600-1/4A
1CAEX-6-025	OSPP32600110121500000000	C3BMB4-1/8	SS2600-1/4A-CE
1CAEX-8-012	OSPP32610000030000000000	C3BMB6-1/4	SS2600-3/16F
1CAEX-8-025	OSPP32610000030000000000	C3BMB6-1/8	SS2600-3/16F-CE
1CANX-10-05	OSPP32610100040000020000	C3BMB8-1/4	SS2800N
1CANX-18-10	OSPP32610100040000020000	C3BMB8-1/8	SS3200N
1CANX-22-12	OSPP32620000040000020000	C3BPL10/12-3/8	SS3600N
1CANX-28-16	OSPP32620000040000020000	C3BPL11/14-3/8	SS4000N
1CANX-8-04	OSPP32620000060000020000	C3BPL2.7/4-1/8	SS4400N
1CAPC-10-04	OSPP32620000060000020000	C3BPL4/6-1/4	SS4600-1/2A-CE
1CAPC-10-05	OSPP32620100040000020000	C3BPL4/6-1/8	SS4600-1/2F
1CAPC-12-05	OSPP32620100040000020000	C3BPL5.5/8-1/8	SS4600-1/2F-CE
1CAPC-12-06	OSPP32C000000200000000000	C3BPL6/8-1/4	SS4600-1/4A
1CAPC-15-08	OSPP32C000000200000000000	C3BPL6/8-1/8	SS4600-1/4A-CE
1CAPC-18-10	OSPP32C000000200000C00000	C3BPL6/8-3/8	SS4600-3/16A-CE
1CAPC-22-12	OSPP32C000000200000C00000	C3BPL7.5/10-1/4	SS4600-3/16F
1CAPC-28-16	OSPP32C000000290000000000	C3BPL7.5/10-3/8	SS4600-3/16F-CE
1CAPC-8-04	OSPP32C000000290000000000	C3BPL8/10-1/4	SS4800N
1CAPX-10-04	OSPP32C000000300000000000	C3BPL8/10-3/8	SS5200N
1CAPX-10-05	OSPP32C000000300000000000	C3BRAB10-1/4	SS5600N
1CAPX-10-05-6V	OSPP32C000000320000000000	C3BRAB10-3/8	SS6400N

1CAPX-10-05C	OSPP32C000000320000000000	C3BRAB12-1/2	SS6600-1/2F
1CAPX-10-06	OSPP32C000000330000000000	C3BRAB12-3/8	SS6600-1/2F-CE
1CAPX-12-05	OSPP32C000000330000000000	C3BRAB14-1/2	SS6600-1/4A
1CAPX-12-06	OSPP32C000000330100000000	C3BRAB14-3/8	SS6600-1/4A-CE
1CAPX-12-06C	OSPP32C000000330100000000	C3BRAB16-1/2	SS7200N
1CAPX-12-06C2	OSPP32C000000350000C00000	C3BRAB6-1/4	SS72N12-12F
1CAPX-12-06S	OSPP32C000000350000C00000	C3BRAB6-1/8	SS8000N
1CAPX-15-08	OSPP32C000000380000000000	C3BRAB8-1/4	SS8600-1/2F
1CAPX-15-08C	OSPP32C000000380000000000	C3BRAB8-1/8	SS8600-1/2F-CE
1CAPX-18-08	OSPP32C000000400000000000	C3BRAB8-3/8	SS8600-1/4A
1CAPX-18-10	OSPP32C000000400000000000	C3F001D2F12I11T30M00	SS8600-1/4A-CE
1CAPX-18-10C	OSPP32C000000430000C00000	C3F001D2F12I11T30M11	SS8800N
1CAPX-22-12	OSPP32C000000430000C00000	C3F001D2F12I11T30M12	SS9600N
1CAPX-22-12C	OSPP32C000000500000000000	C3F001D2F12I11T40M00	SSB24571X
1CAPX-28-16	OSPP32C000000500000000000	C3F001D2F12I11T40M11	SSB2X
1CAPX-6-02	OSPP32C000000600000000000	C3F001D2F12I12T11M00	SSB34571X
1CAPX-6-03	OSPP32C000000600000000000	C3F001D2F12I20T11M00	SSB3X
1CAPX-6-03C	OSPP32C000000630000000000	C3F001D2F12I20T11M12	SSB44571X
1CAPX-6-03C2-6V	OSPP32C000000630000000000	C3F001D2F12I20T30M00	SSB4X
1CAPX-6-04	OSPP32C000000660000000000	C3F001D2F12I20T30M00A32	SSB54571X
1CAPX-8-03	OSPP32C000000660000000000	C3F001D2F12I20T30M10	SSB5X
1CAPX-8-04	OSPP32C000000690000C00000	C3F001D2F12I20T30M11	SSC14571X
1CAPX-8-04-6V	OSPP32C000000690000C00000	C3F001D2F12I20T30M12	SSC1VZX
1CAPX-8-04C	OSPP32C000000700000000000	C3F001D2F12I20T40M00	SSC1X
1CAPX-8-04S	OSPP32C000000700000000000	C3F001D2F12I20T40M10	SSC24571X
1CAYX-10-04	OSPP32C000000720000000000	C3F001D2F12I20T40M11	SSC2VZX
1CAYX-10-04-6V	OSPP32C000000720000000000	C3F001D2F12I21T30M00	SSC2X
1CAYX-10-05	OSPP32C000000853000000000	C3F001D2F12I21T30M11	SSC34571X
1CAYX-10-05-6V	OSPP32C000000853000000000	C3F001D2F12I21T40M00	SSC3VZX
1CAYX-12-06	OSPP32C000000900000C00000	C3F001D2F12I21T40M11	SSC3X
1CAYX-12-06-6V	OSPP32C000000900000C00000	C3F001D2F12I30T30M00	SSC44571X
1CAYX-12-06C	OSPP32C000000950000000000	C3F001D2F12I31T30M12	SSC4VZX
1CAYX-15-08	OSPP32C000000950000000000	C3F001D2F12I32T30M00	SSC4X
1CAYX-15-08-6V	OSPP32C000001000000C00000	C3H050V4F10I10T10M00	SSC54571X
1CAYX-15-08C	OSPP32C000001000000C00000	C3H050V4F10I11T30M12	SSC5VZX
1CAYX-15-08C-6V	OSPP32C000001050070C00000	C3H050V4F10I12T11M00	SSC5X
1CAYX-18-10	OSPP32C000001050070C00000	C3H050V4F10I20T30M00	SSC64571X
1CAYX-18-10-6V	OSPP32C000001070000C00000	C3H050V4F11I12T11M00	SSC6X
1CAYX-18-10C	OSPP32C000001070000C00000	C3H050V4F11I20T30M00	SSC74571X
1CAYX-22-12	OSPP32C000001100000000000	C3H050V4F11I21T11M00	SSC7VZX
1CAYX-28-16	OSPP32C000001100000000000	C3H090V4F10I11T30M12	SSC7X
1CAYX-28-16-6V	OSPP32C000001200000000000	C3H090V4F10I20T30M00	SSC8X
1CAYX-6-03	OSPP32C000001200000000000	C3H090V4F10I20T40M11	SSC9X
1CAYX-6-03-6V	OSPP32C000001220000000000	C3H090V4F11I20T30M00	SSH2-62Y
1CAYX-6-03C	OSPP32C000001220000000000	C3H090V4F12I10T10M00	SSH2-62Y-BSPP
1CAYX-8-03	OSPP32C000001350000000000	C3H090V4F12I20T30M00	SSH2-63Y
1CAYX-8-04	OSPP32C000001350000000000	C3H125V4F10I20T11M00	SSH2-63Y-BSPP
1CAYX-8-04-6V	OSPP32C000001400000000000	C3H125V4F12I31T40M00	SSH3-62Y
1CAYX-8-04C	OSPP32C000001400000000000	C3KIT-I20	SSH3-62Y-BSPP
1CAYX-8-04C-6V	OSPP32C000001450000000000	C3KIT-I21	SSH3-63Y
1CD43BL	OSPP32C000001450000000000	C3KIT-I31	SSH3-63Y-BSPP
1CE26-15-8	OSPP32C000001550000000000	C3KIT-I32	SSH4-62Y
1CE26-22-12	OSPP32C000001550000000000	C3KIT-M11	SSH4-62Y-BSPP

1CE26-28-16	OSPP32C000001755010000000	C3KIT-M12	SSH4-63Y
1CE43-12-6	OSPP32C000001755010000000	C3LICENSEDONGLE	SSH4-63Y-BSPP
1CE43-15-8	OSPP32C000001780000000000	C3LICENSEPOINT	SSH6-62Y
1CE43-18-10	OSPP32C000001780000000000	C3M050D6F10I10T10M00S1	SSH6-62Y-BSPP
1CE43-22-12	OSPP32C000002000000000000	C3M050D6F10I20T11M00S1	SSH6-63Y
1CE43-28-16	OSPP32C000002000000000000	C3M050D6F10I20T30M00S1	SSH6-63Y-BSPP
1CE46-10-4	OSPP32C000002153010000000	C3M050D6F10I20T40M10S1	SSH8-62Y-BSPP
1CE46-10-5	OSPP32C000002153010000000	C3M050D6F10I20T40M11S1	SSH8-63Y-BSPP
1CE46-10-6	OSPP32C000002155000000000	C3M050D6F10I31T11M00S1	SSK01/01
1CE46-12-4	OSPP32C000002155000000000	C3M050D6F10I31T11M11S1	SSK01/02
1CE46-12-5	OSPP32C000002250000000000	C3M050D6F10I32T11M00S1	SSK01/03
1CE46-12-6	OSPP32C000002250000000000	C3M050D6F10I32T30M00S1	SSK01/04
1CE46-12-8	OSPP32C000002255010000000	C3M050D6F10I32T40M11S1	SSK01/05
1CE46-15-10	OSPP32C000002255010000000	C3M050D6F11I12T11M00S1	SSK13/20
1CE46-15-6	OSPP32C00000225501000F000	C3M050D6F11I20T11M00S1	SSK20/02
1CE46-15-8	OSPP32C00000225501000F000	C3M050D6F11I20T30M00S1	SSK21/01
1CE46-18-10	OSPP32C000002355000000000	C3M050D6F11I20T30M00S3	SSK21/02
1CE46-18-12	OSPP32C000002355000000000	C3M050D6F11I20T30M11S3	SSK21/03
1CE46-18-8	OSPP32C00000235501000F000	C3M050D6F11I20T40M10S1	SSK21/04
1CE46-22-12	OSPP32C00000235501000F000	C3M050D6F11I21T11M00S1	SSK21/05
1CE46-22-16	OSPP32C00000255501000F000	C3M050D6F11I21T30M00S3	SSK21/06
1CE46-28-12	OSPP32C00000255501000F000	C3M050D6F11I21T40M00S1	SSK21/07
1CE46-28-16	OSPP32C000002755010000000	C3M050D6F11I31T11M00S1	SSK21/08
1CE46-35-20	OSPP32C000002755010000000	C3M050D6F12I31T11M00S1	SSK21/09
1CE46-6-4	OSPP32C00000275501000F000	C3M100D6F10I20T11M00S1	SSK21/11
1CE46-8-4	OSPP32C00000275501000F000	C3M100D6F10I20T30M00S1	SSK22/01
1CE46-8-5	OSPP32C000002800000000000	C3M100D6F10I20T30M11S1	SSK22/02
1CE48-10-4	OSPP32C000002800000000000	C3M100D6F10I31T11M00S1	SSK22/03
1CE48-10-5	OSPP32C000002955000000000	C3M100D6F10I32T30M00S1	SSK23/01
1CE48-10-6	OSPP32C000002955000000000	C3M100D6F11I12T11M00S1	SSK23/02
1CE48-12-4	OSPP32C000002955010000000	C3M100D6F11I20T11M00S1	SSK23/03
1CE48-12-5	OSPP32C000002955010000000	C3M100D6F11I20T11M11S1	SSK23/05
1CE48-12-6	OSPP32C00000295501000F000	C3M100D6F11I20T30M11S3	SSK24/01
1CE48-12-6C	OSPP32C00000295501000F000	C3M100D6F11I21T30M00S3	SSK24/02
1CE48-12-8	OSPP32C000003250000000000	C3M100D6F11I31T11M00S1	SSK24/03
1CE48-15-10	OSPP32C000003250000000000	C3M100D6F11I32T30M00S1	SSK24/05
1CE48-15-6	OSPP32C00000344501000F000	C3M100D6F12I31T11M00S1	SSK24/21
1CE48-15-8	OSPP32C00000344501000F000	C3M150D6F10I20T40M11S1	SSK24/22
1CE48-15-8C	OSPP32C000003455010000000	C3M150D6F10I21T11M00S1	SSK25/02
1CE48-18-10	OSPP32C000003455010000000	C3M300D6F10I20T11M00S1	SSK27/01/02
1CE48-18-12	OSPP32C00000345501000F000	C3M300D6F10I20T11M12S1	SSK27/01/03
1CE48-18-8	OSPP32C00000345501000F000	C3M300D6F10I20T40M10S1	SSK27/02/02
1CE48-22-12	OSPP32C000100250000000000	C3M300D6F11I12T11M00S1	SSK27/02/03
1CE48-22-16	OSPP32C000100250000000000	C3M300D6F11I20T40M10S1	SSK27/03/02
1CE48-28-12	OSPP32C00010025000000F000	C3M300D6F12I20T30M00S1	SSK27/03/03
1CE48-28-16	OSPP32C00010025000000F000	C3PB10-1/4	SSK27/06/02
1CE48-35-20	OSPP32C000100550000000000	C3PB10-3/8	SSK28/01
1CE48-42-24	OSPP32C000100550000000000	C3PB12-1/2	SSK28/03
1CE48-42-24C	OSPP32C00010055000000F000	C3PB12-3/8	SSK28/20
1CE48-6-4	OSPP32C00010055000000F000	C3PB14-1/2	SSK28/21
1CE48-8-4	OSPP32C000102955010000000	C3PB14-3/8	SSK28/22
1CE48-8-5	OSPP32C000102955010000000	C3PB4-1/8	SSK28/23
1CE55-10-4	OSPP32C010000080000000000	C3PB6-1/4	SSK29/01

1CE55-10-5	OSPP32C010000080000000000	C3PB6-1/8	SSK29/02
1CE55-12-6	OSPP32C010000080000C00000	C3PB8-1/4	SSK29/20
1CE55-15-8	OSPP32C010000080000C00000	C3PB8-1/8	SSK32/20
1CE55-18-12	OSPP32C010000100030C00000	C3POWERPLMC-E20	SSK33/03
1CE55-22-12	OSPP32C010000100030C00000	C3POWERPLMC-E30	SSK638
1CE55-6-3	OSPP32C010000130000C00000	C3S015V4F10I10T10M00	SSK638B
1CE55-6-3C	OSPP32C010000130000C00000	C3S015V4F10I11T11M00	SSL01
1CE55-8-4	OSPP32C010000300000000000	C3S015V4F10I11T30M12	SSL01/10
1CE56-10-5	OSPP32C010000300000000000	C3S015V4F10I11T40M00	SSL02
1CE56-10-6	OSPP32C010000750000000000	C3S015V4F10I11T40M10	SSL10
1CE56-12-6	OSPP32C010000750000000000	C3S015V4F10I12T11M00	SSL20
1CE56-12-6C	OSPP32C010007000000000000	C3S015V4F10I12T11M12	SSL20-316TC
1CE56-15-8	OSPP32C010007000000000000	C3S015V4F10I20T11M00	SSL20-HC
1CE56-6-3	OSPP32C010100200000000000	C3S015V4F10I20T30M00	SSL30
1CE56-8-4	OSPP32C010100200000000000	C3S015V4F10I20T40M10	SSL40
1CE58-18-12	OSPP32C010100230000000000	C3S015V4F10I21T11M00	SSL40-316TC
1CE58-22-12	OSPP32C010100230000000000	C3S015V4F10I22T11M00	SSL40-HCSOG
1CE64-22-12C	OSPP32C100000320000000000	C3S015V4F10I31T30M00	SSL40-IN718
1CE70-12-6	OSPP32C100000320000000000	C3S015V4F10I31T30M12	SSL40-IN718SOG
1CE70-15-8	OSPP32C100000720000000000	C3S015V4F11I11T11M00	SSL40-IN825
1CE70-18-10	OSPP32C100000720000000000	C3S015V4F11I12T11M00	SSL60
1CE70-22-12	OSPP32C100001000000000000	C3S015V4F11I12T11M12	SSL80
1CE70-28-16	OSPP32C100001000000000000	C3S015V4F11I20T11M00	SSL80-316TC
1CE71-35-20	OSPP32C10000245000000F000	C3S015V4F11I20T30M00	SSLA04571X
1CE71-42-24	OSPP32C10000245000000F000	C3S015V4F11I20T40M11	SSLA0X
1CEPC-10-05	OSPP32C10000285000000F000	C3S015V4F11I22T11M00	SSLA2/SSB1/4571X
1CEPC-12-06	OSPP32C10000285000000F000	C3S015V4F11I22T30M00	SSLA2/SSB1X
1CEPC-15-08	OSPP32C200001070000C00000	C3S015V4F12I20T11M00	SSLA34571X
1CEPC-18-10	OSPP32C200001070000C00000	C3S015V4F12I21T11M00	SSLA3X
1CEPC-22-12	OSPP32C212000450000000000	C3S025V2F10C20T11M00	SSLA44571X
1CEPC-28-16	OSPP32C212000450000000000	C3S025V2F10I10T10M00	SSLA4X
1CEPC-8-04	OSPP32CA00000400000000000	C3S025V2F10I11T11M00	SSLA54571X
1CEPX-10-05	OSPP32CA00000400000000000	C3S025V2F10I11T30M00	SSLA5X
1CEPX-10-06	OSPP32CA00000500000000000	C3S025V2F10I11T30M12	SSLA64571X
1CEPX-12-06	OSPP32CA00000500000000000	C3S025V2F10I11T40M00	SSLA6X
1CEPX-15-08	OSPP32CA00000550000000000	C3S025V2F10I11T40M11	SSLA74571X
1CEPX-18-10	OSPP32CA00000550000000000	C3S025V2F10I12T11M00	SSLA7X
1CEPX-22-12	OSPP400000000070000000000	C3S025V2F10I12T11M12	SSLA8X
1CEPX-28-16	OSPP400000000070000000000	C3S025V2F10I20T11M00	SSRB080E06
1CEPX-6-03	OSPP400000000075000000000	C3S025V2F10I20T11M11	SSRB080E10
1CEPX-6-03C-6V	OSPP400000000075000000000	C3S025V2F10I20T30M00	SST06LSA2OB3X
1CEPX-6-04	OSPP400000000080000000000	C3S025V2F10I20T30M11	SST-2
1CEPX-8-04	OSPP400000000080000000000	C3S025V2F10I20T30M12	SST-3
1CEYX-15-08-6V	OSPP40000000008000000F000	C3S025V2F10I20T40M00	SST-4
1CEYX-28-16	OSPP40000000008000000F000	C3S025V2F10I20T40M10	SST-N2
1CEYX-6-03-6V	OSPP400000000100000000000	C3S025V2F10I20T40M11	SST-N3
1CEYX-8-04-6V	OSPP400000000100000000000	C3S025V2F10I20T40M12	SST-N4
1CF26-10-5	OSPP400000000100000A00000	C3S025V2F10I21T11M00	ST12
1CF26-10-6	OSPP400000000100000A00000	C3S025V2F10I21T30M00	ST2220
1CF26-12-6	OSPP40000000010000300F000	C3S025V2F10I21T40M00	ST4440
1CF26-12-8	OSPP40000000010000300F000	C3S025V2F10I21T40M10	ST6660
1CF26-15-8	OSPP400000000100005000000	C3S025V2F10I21T40M11	ST8880
1CF26-18-10	OSPP400000000100005000000	C3S025V2F10I30T11M00	STA1410

1CF26-18-12	OSPP400000000100060D00000	C3S025V2F10I31T11M00	STA1415
1CF26-22-12	OSPP400000000100060D00000	C3S025V2F10I31T30M00	STA1420
1CF26-28-16	OSPP40000000100100000000	C3S025V2F10I31T30M12	STA1425
1CF26-28-20	OSPP40000000100100000000	C3S025V2F10I31T40M00	STA14-K21
1CF26-8-4	OSPP40000000010010000B000	C3S025V2F10I32T11M11	STC20-0300
1CF43-10-5C	OSPP40000000010010000B000	C3S025V2F11C20T11M00	STC20-1500
1CF43-10-6C	OSPP40000000125000000000	C3S025V2F11I10T10M00	STD12SX
1CF43-12-6	OSPP40000000125000000000	C3S025V2F11I11T11M00	STD13/04
1CF43-12-6C	OSPP40000000012500000F000	C3S025V2F11I11T30M00	STD13/04N
1CF43-15-8	OSPP40000000012500000F000	C3S025V2F11I11T30M10	STD13/06
1CF43-15-8C	OSPP40000000012500100B000	C3S025V2F11I11T30M12	STD13/06N
1CF43-18-10	OSPP40000000012500100B000	C3S025V2F11I11T40M00	STD17/04
1CF43-18-10C	OSPP40000000125003000000	C3S025V2F11I11T40M12	STD17/04N
1CF43-22-12	OSPP40000000125003000000	C3S025V2F11I12T11M00	STD17/06
1CF43-22-12C	OSPP40000000012500300F000	C3S025V2F11I12T11M12	STD17/06N
1CF43-28-16	OSPP40000000012500300F000	C3S025V2F11I20T11M00	STD17/09
1CF43-28-16C	OSPP40000000125004000000	C3S025V2F11I20T11M11	STD17/09N
1CF43-35-20C	OSPP40000000125004000000	C3S025V2F11I20T11M12	STF0105A
1CF43-6-4C	OSPP40000000125100000000	C3S025V2F11I20T30M00	STF1228A
1CF43-8-4C	OSPP40000000125100000000	C3S025V2F11I20T30M11	STHSR-50-50-STD
1CF46-10-4	OSPP400000000130000G00000	C3S025V2F11I20T30M12	STHSR-50-50-STD
1CF46-10-5	OSPP400000000130000G00000	C3S025V2F11I20T40M00	STI.2344.100
1CF46-10-6	OSPP40000000150000000000	C3S025V2F11I20T40M10	STI0144100
1CF46-12-4	OSPP40000000150000000000	C3S025V2F11I20T40M11	STI0148100
1CF46-12-5	OSPP400000000150070B00000	C3S025V2F11I21T11M00	STI1144100
1CF46-12-6	OSPP400000000150070B00000	C3S025V2F11I21T30M00	STI1148100
1CF46-12-8	OSPP40000000160000000000	C3S025V2F11I21T40M00	STI2144100
1CF46-15-10	OSPP40000000160000000000	C3S025V2F11I22T30M00	STIF2.2X26.54567X
1CF46-15-6	OSPP40000000160005000000	C3S025V2F11I31T11M00	STIF2.2X324567X
1CF46-15-8	OSPP40000000160005000000	C3S025V2F11I32T11M00	STIF2.2X384567X
1CF46-18-10	OSPP40000000160100000000	C3S025V2F12I11T11M00	STIF2.2X44.54567X
1CF46-18-12	OSPP40000000160100000000	C3S025V2F12I11T30M00	STIF2.5X49.54567X
1CF46-18-8	OSPP40000000016010000B000	C3S025V2F12I11T30M10	STIF2.5X564567X
1CF46-22-10	OSPP40000000016010000B000	C3S025V2F12I11T40M10	STIF2.5X624567X
1CF46-22-12	OSPP40000000165000000000	C3S025V2F12I12T11M00	STIF2.5X684567X
1CF46-22-16	OSPP40000000165000000000	C3S025V2F12I12T11M00A28	STIF2.5X794567X
1CF46-28-12	OSPP40000000200000000000	C3S025V2F12I20T11M00	STIF2.5X984567X
1CF46-28-16	OSPP40000000200000000000	C3S025V2F12I20T30M00	STIF3X1054567X
1CF46-28-20	OSPP40000000020000000F000	C3S025V2F12I20T40M11	STIF3X1154567X
1CF46-35-20	OSPP40000000020000000F000	C3S025V2F12I21T11M00	STIF3X1244567X
1CF46-6-4	OSPP40000000200000600000	C3S025V2F12I21T30M00	STIF3X1464301X
1CF46-8-4	OSPP40000000200000600000	C3S025V2F12I21T40M00	STM1059173
1CF46-8-5	OSPP40000000200000800000	C3S038V4F10C10T11M00	STM105942
1CF48-10-4	OSPP40000000200000800000	C3S038V4F10I10T10M00	STM105985
1CF48-10-5	OSPP400000000200000B00000	C3S038V4F10I11T11M00	STM1459121
1CF48-10-5C	OSPP400000000200000B00000	C3S038V4F10I11T40M00	STM1459183
1CF48-10-6	OSPP40000000200001000000	C3S038V4F10I11T40M11	STM1459245
1CF48-10-6C	OSPP40000000200001000000	C3S038V4F10I11T40M12	STM145960
1CF48-12-4	OSPP40000000200003000000	C3S038V4F10I12T11M00	STM6211110
1CF48-12-5	OSPP40000000200003000000	C3S038V4F10I20T11M00	STM6211120
1CF48-12-6	OSPP40000000200005000000	C3S038V4F10I20T30M00	STM709120
1CF48-12-6C	OSPP40000000200005000000	C3S038V4F10I20T40M00	ST-MC-BIG
1CF48-12-8	OSPP40000000200100000000	C3S038V4F10I20T40M11	ST-MC-D

1CF48-15-10	OSPP40000000200100000000	C3S038V4F10I20T40M11A38	ST-MC-S
1CF48-15-6	OSPP40000000020010000B000	C3S038V4F10I21T11M00	STOP12SX
1CF48-15-8	OSPP40000000020010000B000	C3S038V4F10I21T30M00	STOP30SX
1CF48-15-8C	OSPP40000000206000000000	C3S038V4F10I21T40M11	STP10/04
1CF48-18-10	OSPP40000000206000000000	C3S038V4F10I21T40M12	STP10/04N
1CF48-18-10C	OSPP40000000210000000000	C3S038V4F10I22T11M00	STP10/04R
1CF48-18-12	OSPP40000000210000000000	C3S038V4F10I31T11M00	STP10/06
1CF48-18-8	OSPP40000000022000000F000	C3S038V4F11I10T10M00	STP10/06N
1CF48-22-10	OSPP40000000022000000F000	C3S038V4F11I11T11M00	STP10/06R
1CF48-22-12	OSPP40000000250000000000	C3S038V4F11I11T30M00	STP13/04
1CF48-22-12C	OSPP40000000250000000000	C3S038V4F11I11T40M00	STP13/04R
1CF48-22-16	OSPP40000000025000020F000	C3S038V4F11I12T11M00	STP13/06
1CF48-28-12	OSPP40000000025000020F000	C3S038V4F11I20T11M00	STP13/06N
1CF48-28-16	OSPP40000000250000400000	C3S038V4F11I20T11M12	STP13/06R
1CF48-28-16C	OSPP40000000250000400000	C3S038V4F11I20T30M00	STP13/09
1CF48-28-20	OSPP400000000250000D00000	C3S038V4F11I20T30M11	STP13/09N
1CF48-35-16	OSPP400000000250000D00000	C3S038V4F11I20T30M12	STP17/04
1CF48-35-20	OSPP40000000250004000000	C3S038V4F11I20T40M10	STP17/06
1CF48-35-20C	OSPP40000000250004000000	C3S038V4F11I20T40M11	STP17/06E
1CF48-42-24	OSPP40000000250005000000	C3S038V4F11I20T40M12	STP17/06N
1CF48-42-24C	OSPP40000000250005000000	C3S038V4F11I21T11M00	STP17/06R
1CF48-6-4	OSPP40000000250100000000	C3S038V4F11I21T30M00	STP17/09
1CF48-8-4	OSPP40000000250100000000	C3S038V4F11I31T11M00	STP17/09E
1CF48-8-4C	OSPP400000000250360B00000	C3S038V4F11I32T11M00	STP17/09N
1CF48-8-5	OSPP400000000250360B00000	C3S038V4F11I32T30M11	STP17/09R
1CF54-12-6	OSPP40000000265000000000	C3S038V4F12I10T10M00	STP21/06
1CF54-8-4	OSPP40000000265000000000	C3S038V4F12I20T11M00	STP21/09
1CF55-10-4	OSPP40000000270000000000	C3S038V4F12I20T30M00	STP21/09E
1CF55-10-5	OSPP40000000270000000000	C3S038V4F12I21T30M00	STP21/09N
1CF55-10-6	OSPP400000000270000B00000	C3S063V2F10I10T10M00	STP21/09R
1CF55-12-5	OSPP400000000270000B00000	C3S063V2F10I11T11M00	STP21/13
1CF55-12-6	OSPP40000000300000000000	C3S063V2F10I11T30M00	STP21/13N
1CF55-12-6-6V	OSPP40000000300000000000	C3S063V2F10I11T30M11	STRMB10530083801
1CF55-15-8	OSPP40000000030000000F000	C3S063V2F10I11T30M12	STRMB10540084001
1CF55-15-8C	OSPP40000000030000000F000	C3S063V2F10I11T40M00	STRMB14530224001
1CF55-18-12	OSPP40000000300000200000	C3S063V2F10I11T40M12	STRSB14530153801
1CF55-22-12	OSPP40000000300000200000	C3S063V2F10I12T11M00	STRSMB0600300014X400----X
1CF55-28-16	OSPP40000000300000600000	C3S063V2F10I12T11M12	STS.5117.210
1CF55-6-3	OSPP40000000300000600000	C3S063V2F10I20T11M00	STS.5217.210
1CF55-6-3C	OSPP40000000300000606000	C3S063V2F10I20T30M00	STS.5237.210
1CF55-8-4	OSPP40000000300000606000	C3S063V2F10I20T30M12	ST-TC-01
1CF55-8-4C	OSPP40000000300000800000	C3S063V2F10I20T40M00	ST-TC-02
1CF56-10-4	OSPP40000000300000800000	C3S063V2F10I20T40M11	ST-TR-0
1CF56-10-5	OSPP40000000300001000000	C3S063V2F10I21T30M00	ST-TR-1
1CF56-10-6	OSPP40000000300001000000	C3S063V2F10I21T40M00	ST-TR-2
1CF56-12-5	OSPP40000000300003000000	C3S063V2F10I31T11M00	ST-TR-3
1CF56-12-6	OSPP40000000300003000000	C3S063V2F10I32T40M00	ST-TUB
1CF56-12-6C	OSPP40000000300004000000	C3S063V2F11C10T11M00	STV
1CF56-15-8	OSPP40000000300004000000	C3S063V2F11I10T10M00	STVD-50-30-STD
1CF56-6-3	OSPP40000000300005000000	C3S063V2F11I11T11M00	STVD-50-30-STD
1CF56-6-4	OSPP40000000300005000000	C3S063V2F11I11T30M00	STVDR50-30
1CF56-8-4	OSPP40000000030000M000000	C3S063V2F11I11T30M11	STVDR50-30
1CF56-8-4C	OSPP40000000030000M000000	C3S063V2F11I11T30M12	STVDR-50-30-STD

1CF58-10-6	OSPP40000000300100000000	C3S063V2F11I11T40M00	STVDR-50-30-STD
1CF58-12-6	OSPP40000000300100000000	C3S063V2F11I12T11M00	STVSR-50-30-L-STD
1CF58-15-8	OSPP40000000030010000B000	C3S063V2F11I20T11M00	STVSR-50-30-L-STD
1CF58-18-10	OSPP40000000030010000B000	C3S063V2F11I20T11M11	STVSR-80-40-STD
1CF58-18-12	OSPP40000000310000000000	C3S063V2F11I20T30M00	STVSR-80-40-STD
1CF58-22-12	OSPP40000000310000000000	C3S063V2F11I20T30M11	ST-WR-3
1CF58-22-12C	OSPP40000000320000000000	C3S063V2F11I20T40M10	SU13/025/05
1CF58-28-16	OSPP40000000320000000000	C3S063V2F11I20T40M11	SU17/025/05
1CF70-10-6	OSPP40000000325000000000	C3S063V2F11I21T11M00	SUB-D-15B-HD
1CF70-10-6C	OSPP40000000325000000000	C3S063V2F11I21T30M00	SUB-D-15S-HD
1CF70-12-6	OSPP40000000032500000F000	C3S063V2F11I21T30M11	SUB-D-25S
1CF70-12-6C	OSPP40000000032500000F000	C3S063V2F11I21T30M12	SUB-D-26S-HD
1CF70-15-10	OSPP400000000330000G00000	C3S063V2F11I21T40M00	SUB-D-9B
1CF70-15-8	OSPP400000000330000G00000	C3S063V2F11I22T30M00	SUB-D-9S
1CF70-15-8C	OSPP40000000340008000000	C3S063V2F11I31T11M00	SV04LLCF
1CF70-18-10	OSPP40000000340008000000	C3S063V2F11I31T11M11	SV05/06
1CF70-18-10C	OSPP40000000350000000000	C3S063V2F12C10T11M00	SV06L71
1CF70-18-12	OSPP40000000350000000000	C3S063V2F12C10T30M00	SV06L71X
1CF70-18-8	OSPP40000000350000200000	C3S063V2F12C10T40M00	SV06LCF
1CF70-22-12	OSPP40000000350000200000	C3S063V2F12I10T10M00	SV06LCFX
1CF70-28-16	OSPP40000000350000600000	C3S063V2F12I11T11M00	SV06LMS
1CF70-28-16C	OSPP40000000350000600000	C3S063V2F12I11T30M00	SV06LMSX
1CF70-35-16	OSPP40000000350000800000	C3S063V2F12I11T40M00	SV06LOMD71
1CF70-35-20C	OSPP40000000350000800000	C3S063V2F12I11T40M11	SV06LOMDCF
1CF71-12-6	OSPP400000000350000D00000	C3S063V2F12I12T11M00	SV06LOMDCFV
1CF71-15-8	OSPP400000000350000D00000	C3S063V2F12I20T11M00	SV06LOMDMS
1CF71-18-10	OSPP40000000350004000000	C3S063V2F12I20T30M00	SV06LSPH71
1CF71-22-12	OSPP40000000350004000000	C3S063V2F12I20T30M11	SV06S71
1CF71-28-16	OSPP40000000350005000000	C3S063V2F12I20T40M00	SV06S71X
1CF71-35-20	OSPP40000000350005000000	C3S063V2F12I20T40M10	SV06SCF
1CF71-42-24	OSPP40000000035000500F000	C3S063V2F12I20T40M11	SV06SMS
1CFPC-10-05	OSPP40000000035000500F000	C3S063V2F12I21T11M00	SV06SOMD71
1CFPC-12-06	OSPP40000000035010000B000	C3S063V2F12I21T30M00	SV06SOMDCF
1CFPC-15-08	OSPP40000000035010000B000	C3S063V2F12I21T30M12	SV06ZL71
1CFPC-18-10	OSPP40000000360000000000	C3S063V2F12I21T40M00	SV06ZLCF
1CFPC-22-12	OSPP40000000360000000000	C3S063V2F12I31T11M00	SV06ZLSSACF
1CFPC-8-04	OSPP40000000370005000000	C3S075V4F10I10T10M00	SV06ZS71
1CFPX-10-04	OSPP40000000370005000000	C3S075V4F10I11T11M00	SV06ZSCF
1CFPX-10-05	OSPP40000000375000000000	C3S075V4F10I11T30M00	SV08L71
1CFPX-10-05C	OSPP40000000375000000000	C3S075V4F10I11T30M12	SV08L71X
1CFPX-10-06	OSPP40000000380000000000	C3S075V4F10I11T40M00	SV08LCF
1CFPX-12-05	OSPP40000000380000000000	C3S075V4F10I11T40M12	SV08LCFX
1CFPX-12-06	OSPP40000000384000000000	C3S075V4F10I12T11M00	SV08LDPR71CF
1CFPX-12-06C	OSPP40000000384000000000	C3S075V4F10I12T11M12	SV08LMS
1CFPX-15-08	OSPP40000000400000000000	C3S075V4F10I20T11M00	SV08LOMD71
1CFPX-18-10	OSPP40000000400000000000	C3S075V4F10I20T11M11	SV08LOMDCF
1CFPX-22-12	OSPP40000000400000003000	C3S075V4F10I20T11M12	SV08LOMDCFV
1CFPX-28-16	OSPP40000000400000003000	C3S075V4F10I20T30M00	SV08S71
1CFPX-6-03	OSPP40000000040000000F000	C3S075V4F10I20T30M12	SV08S71X
1CFPX-6-03C-6V	OSPP40000000040000000F000	C3S075V4F10I20T40M00	SV08SCF
1CFPX-6-04	OSPP40000000400000100000	C3S075V4F10I20T40M11	SV08SCFX
1CFPX-8-03S	OSPP40000000400000100000	C3S075V4F10I21T11M00	SV08SMS
1CFPX-8-04	OSPP40000000400000600000	C3S075V4F10I21T30M00	SV08SOMD71

1CFYX-10-04-6V	OSPP40000000400000600000	C3S075V4F10I21T30M11	SV08SOMDCF
1CFYX-10-05	OSPP400000000400000A00000	C3S075V4F10I21T30M12	SV08ZL71
1CFYX-10-05-6V	OSPP400000000400000A00000	C3S075V4F10I21T40M11	SV08ZLCF
1CFYX-12-06	OSPP400000000400000H00000	C3S075V4F10I21T40M12	SV08ZLSSACF
1CFYX-12-06-6V	OSPP400000000400000H00000	C3S075V4F10I30T11M00	SV08ZLVITCF
1CFYX-15-08	OSPP40000000400001000000	C3S075V4F10I31T11M00	SV08ZLVITSSACF
1CFYX-15-08-6V	OSPP40000000400001000000	C3S075V4F10I31T30M12	SV08ZS71
1CFYX-18-10	OSPP40000000400003000000	C3S075V4F10I32T30M00	SV08ZSCF
1CFYX-22-12	OSPP40000000400003000000	C3S075V4F11I11T11M00	SV10/06
1CFYX-6-03	OSPP40000000400004000000	C3S075V4F11I11T30M00	SV10/06N
1CFYX-6-03-6V	OSPP40000000400004000000	C3S075V4F11I11T40M00	SV10/08
1CFYX-8-04	OSPP40000000040000400F000	C3S075V4F11I20T11M00	SV10L60OMD71
1CFYX-8-04-6V	OSPP40000000040000400F000	C3S075V4F11I20T30M00	SV10L71
1CR33BL	OSPP40000000400005000000	C3S075V4F11I20T30M12	SV10L71X
1CSPAS135P02500	OSPP40000000400005000000	C3S075V4F11I20T40M00	SV10LCF
1CSPAS135P02500	OSPP40000000400100000000	C3S075V4F11I20T40M11	SV10LCFX
1CW46-15-4	OSPP40000000400100000000	C3S075V4F11I21T30M00	SV10LDPR71CF
1CW46-15-5	OSPP40000000040010000B000	C3S075V4F11I21T40M00	SV10LMS
1CW46-15-6	OSPP40000000040010000B000	C3S075V4F12C10T11M00	SV10LOB3X
1CW46-15-8	OSPP40000000410000000000	C3S075V4F12I10T10M00	SV10LOMD71
1CW48-15-4	OSPP40000000410000000000	C3S075V4F12I12T11M10	SV10LOMDCF
1CW48-15-5	OSPP400000000410000D00000	C3S075V4F12I20T11M00	SV10LOMDCFV
1CW48-15-6	OSPP400000000410000D00000	C3S075V4F12I20T30M00	SV10LOMDMS
1CW48-15-8	OSPP40000000410001000000	C3S075V4F12I21T30M00	SV10LSPH71
1D043-10-5C	OSPP40000000410001000000	C3S075V4F12I31T40M10	SV10S71
1D043-12-6C	OSPP40000000410003003000	C3S100V2F10I10T10M00	SV10SCF
1D043-15-8	OSPP40000000410003003000	C3S100V2F10I21T30M00	SV10SCFX
1D043-15-8C	OSPP40000000415000000000	C3S100V2F12I11T30M00	SV10SOMD71
1D043-18-10C	OSPP40000000415000000000	C3S100V2F12I20T30M00	SV10SOMDCF
1D043-22-12C	OSPP40000000420001000000	C3S100V2F12I31T11M00	SV10ZL71
1D043-28-16	OSPP40000000420001000000	C3S150V2F12I10T10M00	SV10ZLCF
1D043-28-16C	OSPP40000000425000000000	C3S150V2F12I11T40M12	SV10ZLSSACF
1D043-8-4C	OSPP40000000425000000000	C3S150V2F12I21T30M11	SV10ZLVITCF
1D046-10-4	OSPP40000000425000600000	C3S150V2F12I31T11M00	SV10ZLVITSSACF
1D046-10-5	OSPP40000000425000600000	C3S150V4F10I10T10M00	SV10ZS71
1D046-10-6	OSPP40000000425000606000	C3S150V4F10I11T11M00	SV10ZSCF
1D046-12-4	OSPP40000000425000606000	C3S150V4F10I11T30M00	SV10ZSVITCF
1D046-12-5	OSPP40000000425005000000	C3S150V4F10I11T30M12	SV12L71
1D046-12-6	OSPP40000000425005000000	C3S150V4F10I11T40M00	SV12L71X
1D046-12-8	OSPP40000000430000000000	C3S150V4F10I12T11M00	SV12LCF
1D046-15-10	OSPP40000000430000000000	C3S150V4F10I12T11M12	SV12LCFX
1D046-15-6	OSPP40000000430001000000	C3S150V4F10I20T11M00	SV12LDPR71CF
1D046-15-8	OSPP40000000430001000000	C3S150V4F10I20T11M10	SV12LMS
1D046-18-10	OSPP40000000430105000000	C3S150V4F10I20T11M12	SV12LOMD71
1D046-18-12	OSPP40000000430105000000	C3S150V4F10I20T30M00	SV12LOMDCF
1D046-18-8	OSPP40000000432001000000	C3S150V4F10I20T40M00	SV12LOMDCFV
1D046-22-12	OSPP40000000432001000000	C3S150V4F10I20T40M10	SV12LOMDMS
1D046-28-12	OSPP40000000440004000000	C3S150V4F10I20T40M11	SV12LSPH71
1D046-28-16	OSPP40000000440004000000	C3S150V4F10I21T40M11	SV12S71
1D046-35-20	OSPP40000000450000000000	C3S150V4F10I21T40M12	SV12S71X
1D046-6-4	OSPP40000000450000000000	C3S150V4F10I31T11M00	SV12SCF
1D046-8-4	OSPP40000000045000000F000	C3S150V4F10I32T11M00	SV12SCFX
1D046-8-5	OSPP40000000045000000F000	C3S150V4F10I32T11M11	SV12SOMD71

1D048-10-4	OSPP40000000045000020000	C3S150V4F11C10T30M00	SV12SOMDCF
1D048-10-5	OSPP40000000045000020000	C3S150V4F11C13T40M00	SV12ZL71
1D048-10-5C	OSPP400000000450000D00000	C3S150V4F11I11T11M00	SV12ZLCF
1D048-10-6	OSPP400000000450000D00000	C3S150V4F11I11T30M00	SV12ZLSSACF
1D048-12-4	OSPP40000000045000400000	C3S150V4F11I11T30M11	SV12ZLVITCF
1D048-12-5	OSPP40000000045000400000	C3S150V4F11I11T30M12	SV12ZS71
1D048-12-6	OSPP40000000045000500000	C3S150V4F11I20T11M00	SV12ZSCF
1D048-12-6C	OSPP40000000045000500000	C3S150V4F11I20T30M00	SV12ZSVITCF
1D048-12-8	OSPP40000000046000000000	C3S150V4F11I20T30M11	SV13/06
1D048-15-10	OSPP40000000046000000000	C3S150V4F11I20T30M12	SV13/08
1D048-15-6	OSPP40000000046000200000	C3S150V4F11I20T40M00	SV13/08N
1D048-15-8	OSPP40000000046000200000	C3S150V4F11I20T40M10	SV13/10
1D048-15-8C	OSPP40000000046000400000	C3S150V4F11I20T40M11	SV13/12
1D048-18-10	OSPP40000000046000400000	C3S150V4F11I21T30M00	SV14S71
1D048-18-10C	OSPP40000000047000000000	C3S150V4F11I21T40M00	SV14SCF
1D048-18-12	OSPP40000000047000000000	C3S150V4F11I30T11M00	SV14SCFX
1D048-18-8	OSPP40000000047500400000	C3S150V4F11I32T11M00	SV14SMS
1D048-22-12	OSPP40000000047500400000	C3S150V4F11I32T40M00A48	SV14SOMD71
1D048-22-12C	OSPP40000000048000000000	C3S150V4F12I10T10M00	SV14SOMDCF
1D048-28-12	OSPP40000000048000000000	C3S150V4F12I11T30M00	SV14ZS71
1D048-28-16	OSPP40000000050000000000	C3S150V4F12I11T40M00	SV14ZSCF
1D048-28-16C	OSPP40000000050000000000	C3S150V4F12I11T40M12	SV15L60OMD71
1D048-35-20	OSPP4000000005000000F000	C3S150V4F12I20T11M00	SV15L71
1D048-42-24	OSPP4000000005000000F000	C3S150V4F12I20T30M00	SV15L71X
1D048-6-4	OSPP40000000050000400000	C3S150V4F12I21T11M00	SV15LCF
1D048-8-4	OSPP40000000050000400000	C3S150V4F12I21T30M11	SV15LCFX
1D048-8-4C	OSPP40000000050000600000	C3S300V4F10I10T10M00	SV15LDPR71CF
1D048-8-5	OSPP40000000050000600000	C3S300V4F10I11T11M00	SV15LMS
1D055-10-5	OSPP40000000050000800000	C3S300V4F10I12T11M00	SV15LMSX
1D055-10-6	OSPP40000000050000800000	C3S300V4F10I12T11M11	SV15LOMD71
1D055-12-6	OSPP400000000500000B00000	C3S300V4F10I12T11M12	SV15LOMDCF
1D055-12-6C	OSPP400000000500000B00000	C3S300V4F10I20T11M00	SV15LOMDCFV
1D055-15-6	OSPP400000000500000D00000	C3S300V4F10I20T11M11	SV15LOMDMS
1D055-15-8	OSPP400000000500000D00000	C3S300V4F10I20T11M12	SV15ZL71
1D055-22-12	OSPP40000000050000001000000	C3S300V4F10I20T30M00	SV15ZLCF
1D055-8-4	OSPP40000000050000001000000	C3S300V4F10I20T40M10	SV15ZLVITCF
1D055-8-4C	OSPP40000000050000003000000	C3S300V4F10I21T30M00	SV15ZLVITSSACF
1D056-10-5	OSPP40000000050000003000000	C3S300V4F10I21T40M11	SV16S71
1D056-10-6	OSPP40000000050000004000000	C3S300V4F10I22T40M00	SV16S71X
1D056-12-5	OSPP40000000050000004000000	C3S300V4F10I31T11M00	SV16SCF
1D056-12-6	OSPP40000000050000005000000	C3S300V4F11I11T30M00	SV16SCFX
1D056-15-6	OSPP40000000050000005000000	C3S300V4F11I20T11M00	SV16SMS
1D056-15-8	OSPP40000000050000100000000	C3S300V4F11I20T30M00	SV16SOMD71
1D056-6-3	OSPP40000000050000100000000	C3S300V4F11I20T30M11	SV16SOMDCF
1D056-8-4	OSPP4000000005001000 0B000	C3S300V4F11I20T40M10	SV16ZS71
1D058-10-6	OSPP4000000005001000 0B000	C3S300V4F11I20T40M11	SV16ZSCF
1D058-12-6	OSPP40000000050500000000	C3S300V4F11I21T11M00	SV16ZSVITCF
1D058-15-6	OSPP40000000050500000000	C3S300V4F11I31T11M00	SV17/08
1D058-22-12	OSPP40000000050500100000	C3S300V4F11I32T30M11	SV17/10
1D058-28-16	OSPP40000000050500100000	C3S300V4F12I11T30M12	SV17/10AN
1D058-8-4	OSPP400000000520000A00000	C3S300V4F12I20T11M00	SV17/12
1D070-12-6C	OSPP400000000520000A00000	C3S300V4F12I31T40M10	SV17/12AN
1D070-15-8	OSPP400000000520000H00000	C400B	SV17/13AN

1D070-15-8C	OSPP400000000520000H00000	C400S	SV18L71
1D070-18-10	OSPP40000000000520005000000	C400S65	SV18L71X
1D070-18-10C	OSPP40000000000520005000000	C40-200/130279	SV18LCF
1D070-22-12	OSPP40000000000530000600000	C40-200/130279	SV18LCFX
1D070-22-12C	OSPP40000000000530000600000	C40-80/132056	SV18LDPR71CF
1D070-28-16	OSPP40000000000535000000000	C40-80/132056	SV18LMS
1D071-42-24	OSPP40000000000535000000000	C40VH-100/S51102	SV18LMSX
1D091N-10-6	OSPP40000000000540000000000	C40VH-100/S51102	SV18LOMD71
1D091N-10-6C	OSPP40000000000540000000000	C40VH-100-160	SV18LOMDCF
1D091N-10-8	OSPP40000000000540000000F000	C40VH-100-160	SV18LOMDCFV
1D091N-12-10	OSPP40000000000540000000F000	C41098-001	SV18ZL71
1D091N-12-10C	OSPP40000000000540001000000	C41-8032DH-0100	SV18ZLCF
1D091N-12-8C	OSPP40000000000540001000000	C41-8032DH-0100	SV18ZLVITCF
1D091N-15-10	OSPP40000000000550000000000	C41-8050AA-0050	SV20S71
1D091N-15-10C	OSPP40000000000550000000000	C41-8050AA-0050	SV20S71X
1D091N-18-12	OSPP40000000000550000606000	C41-8050DH-0050	SV20SCF
1D091N-18-12C	OSPP40000000000550000606000	C41-8050DH-0050	SV20SCFX
1D091N-22-16	OSPP40000000000550004000000	C41-8050DH-0160	SV20SMS
1D091N-6-4	OSPP40000000000550004000000	C41-8050DH-0160	SV20SOMD71
1D091N-6-4C	OSPP40000000000550005000000	C41-8125AA-0055	SV20SOMDCF
1D091N-8-5	OSPP40000000000550005000000	C41-8125AA-0055	SV20ZS71
1D091N-8-5C	OSPP40000000000560000000000	C41-8125AA-0400	SV20ZSCF
1D093N-15-8	OSPP40000000000560000000000	C41-8125AA-0400	SV21/17AN
1D0NX-10-05	OSPP40000000000560004000000	C41-8125AA-1529	SV22L71
1D0NX-12-06	OSPP40000000000560004000000	C41-8125AA-1529	SV22L71X
1D0NX-12-06C	OSPP40000000056010000B000	C41-8125AA-1600	SV22LCF
1D0NX-15-08	OSPP40000000056010000B000	C41-8125AA-1600	SV22LCFX
1D0NX-22-12	OSPP40000000000565000600000	C41-8160/S32957	SV22LDPR71CF
1D0NX-22-12C	OSPP40000000000565000600000	C41-8160/S32957	SV22LMS
1D0NX-28-16	OSPP40000000000570000000000	C41-8160BA-0080	SV22LOMD71
1D0NX-8-04	OSPP40000000000570000000000	C41-8160BA-0080	SV22LOMDCF
1D0NX-8-04C	OSPP40000000000570001000000	C41-8160BA-0250	SV22LOMDCFV
1D0PC-10-05	OSPP40000000000570001000000	C41-8160BA-0250	SV22LOMDMS
1D0PC-12-06	OSPP40000000000570005000000	C41-8160BA-0300	SV22ZL71
1D0PC-15-08	OSPP40000000000570005000000	C41-8160BA-0300	SV22ZLCF
1D0PC-8-04	OSPP40000000000580005000000	C41-8160BA-0320	SV22ZLSSACF
1D0PX-10-05	OSPP40000000000580005000000	C41-8160BA-0320	SV22ZLVITCF
1D0PX-12-06	OSPP40000000000587000000000	C41-8160BA-0400	SV25C4-4F
1D0PX-15-08	OSPP40000000000587000000000	C41-8160BA-0400	SV25C8-8F
1D0PX-18-10	OSPP40000000000600000000000	C41-8160BA-0460	SV25C8-8FSL
1D0PX-22-12	OSPP40000000000600000000000	C41-8160BA-0460	SV25C8-SPK
1D0PX-6-03	OSPP40000000000600000600000	C41-8160BA-0600	SV25N4-4F
1D0PX-8-04	OSPP40000000000600000600000	C41-8160BA-0600	SV25N8-6F
1D0YX-10-05	OSPP400000000600000G00000	C41-8160DG-0600	SV25N8-8F
1D0YX-12-06	OSPP400000000600000G00000	C41-8160DG-0600	SV25S71
1D0YX-15-08	OSPP400000000600000H00000	C41-8160TT-0600	SV25S71X
1D0YX-15-08C2	OSPP400000000600000H00000	C41-8160TT-0600	SV25SCF
1D0YX-18-10	OSPP40000000000600003000000	C41-8200BA-0400	SV25SCFX
1D0YX-22-12	OSPP40000000000600003000000	C41-8200BA-0400	SV25SDPR71CF
1D0YX-28-16	OSPP40000000000600000300F000	C41-8200BA-0500	SV25SMS
1D0YX-6-03	OSPP40000000000600000300F000	C41-8200BA-0500	SV25SMSX
1D0YX-8-04	OSPP40000000000600004000000	C41-8200BA-0800	SV25SOMD71
1D1X-10-05	OSPP40000000000600004000000	C41-8200BA-0800	SV25SOMDCF

1D243-10-4C	OSPP40000000600005000000	C41-8200DG-0600	SV25ZS71
1D243-12-5C	OSPP40000000600005000000	C41-8200DG-0600	SV25ZSCF
1D243-12-6	OSPP40000000600100000000	C41-8200DH-0400	SV25ZSVITCF
1D243-12-6C	OSPP40000000600100000000	C41-8200DH-0400	SV28L71
1D243-14-6	OSPP40000000060010000B000	C41-D200MG-0400	SV28LCF
1D243-14-6C	OSPP40000000060010000B000	C41-D200MG-0400	SV28LCFX
1D243-16-8	OSPP40000000610004000000	C41-S080/S50141	SV28LDPR71CF
1D243-16-8C	OSPP40000000610004000000	C41-S080/S50141	SV28LMS
1D243-20-10	OSPP40000000612005000000	C41-T160MC-0025	SV28LMSX
1D243-20-10C	OSPP40000000612005000000	C41-T160MC-0025	SV28LOMD71
1D243-20-12	OSPP40000000620000600000	C41-T160MC-0200	SV28LOMDCF
1D243-20-12C	OSPP40000000620000600000	C41-T160MC-0200	SV28LOMDCFV
1D243-25-12	OSPP40000000620005000000	C41-T160MC-0300	SV28ZL71
1D243-25-12C	OSPP40000000620005000000	C41-T160MC-0300	SV28ZLCF
1D243-30-16	OSPP40000000630000000000	C41-T160MC-0320	SV28ZLSSACF
1D246-10-4	OSPP40000000630000000000	C41-T160MC-0320	SV28ZLVITCF
1D246-10-5	OSPP40000000630000600000	C41-T160MC-0400	SV28ZLVITSSACF
1D246-10-6	OSPP40000000630000600000	C41-T160MC-0400	SV30S71
1D246-12-4	OSPP40000000640000000000	C41-T160MC-0500	SV30S71X
1D246-12-5	OSPP40000000640000000000	C41-T160MC-0500	SV30SCF
1D246-12-6	OSPP40000000640005000000	C41-T160MC-0935	SV30SCFX
1D246-12-8	OSPP40000000640005000000	C41-T160MC-0935	SV30SOMD71
1D246-14-5	OSPP40000000650000000000	C41-T160MS-0800	SV30SOMDCF
1D246-14-6	OSPP40000000650000000000	C41-T160MS-0800	SV30ZS71
1D246-16-10	OSPP40000000065000000F000	C41-T160MS-0935	SV30ZSCF
1D246-16-8	OSPP40000000065000000F000	C41-T160MS-0935	SV35G01
1D246-20-10	OSPP40000000650000600000	C41-T200MC-0200	SV35G01
1D246-20-12	OSPP40000000650000600000	C41-T200MC-0200	SV35L71
1D246-25-12	OSPP400000000650000G00000	C41-T200MC-0400	SV35LCF
1D246-25-16	OSPP400000000650000G00000	C41-T200MC-0400	SV35LCFX
1D246-30-16	OSPP40000000650004000000	C41-T200MC-0600	SV35LDPR71CF
1D246-38-20	OSPP40000000650004000000	C41-T200MC-0600	SV35LMS
1D246-6-4	OSPP40000000650005000000	C41-T200MC-0800	SV35LOMD71
1D246-8-4	OSPP40000000650005000000	C41-T200MC-0800	SV35LOMDCF
1D246-8-5	OSPP40000000065000500F000	C4BL	SV35ZL71
1D248-10-4	OSPP40000000065000500F000	C4BPL4/6-1/4	SV35ZLCF
1D248-10-5	OSPP40000000650100000000	C4BPL4/6-1/8	SV35ZLVITCF
1D248-10-6	OSPP40000000650100000000	C4BPL6/8-1/4	SV35ZLVITSSACF
1D248-12-4	OSPP40000000660005000000	C4BPL8/12-1/4	SV38S71
1D248-12-5	OSPP40000000660005000000	C4BU	SV38SCF
1D248-12-6	OSPP40000000664000200000	C4CA-E32/2U00	SV38SCFX
1D248-12-8	OSPP40000000664000200000	C4CD-E50/4T00	SV38SOMD71
1D248-14-5	OSPP40000000664000400000	C4DA11E32/2T9900X425	SV38SOMDCF
1D248-14-6	OSPP40000000664000400000	C4DAN21E32/2R1200	SV38ZSCF
1D248-16-10	OSPP40000000665000000000	C4DB101E16/0N1200	SV38ZSVITCF
1D248-16-8	OSPP40000000665000000000	C4G	SV42L71
1D248-16-8C	OSPP40000000665003000000	C4POPPET-SS/1	SV42LCF
1D248-20-10	OSPP40000000665003000000	C4R	SV42LCFX
1D248-20-12	OSPP40000000670000000000	C4UCOB10-1/4	SV42LDPR71CF
1D248-25-12	OSPP40000000670000000000	C4UCOB8-1/4	SV42LOMD71
1D248-25-12C	OSPP40000000670000600000	C4UCOB8-1/8	SV42LOMDCF
1D248-25-16	OSPP40000000670000600000	C4V03-5302B5	SV42ZL71
1D248-30-16	OSPP40000000670005000000	C4V06-5912B5	SV42ZLCF

1D248-38-20	OSPP40000000670005000000	C4V06-5A04B1023	SV42ZLVITCF
1D248-6-4	OSPP40000000675000000000	C4V10-5D82B1	SV462
1D248-8-4	OSPP40000000675000000000	C4W	SVEAC12-12F
1D248-8-5	OSPP40000000068000000F000	C4Y	SVEAC12-12FE
1D255-10-4	OSPP40000000068000000F000	C-50	SVEAC4-4F
1D255-10-4C	OSPP40000000680000600000	C55000A-000-001	SVEAC4-4FE
1D255-12-5	OSPP40000000680000600000	C55000A-100	SVEAC4-4FV
1D255-12-6	OSPP40000000690000600000	C55698-001	SVEAC4-4FVSL
1D255-14-6	OSPP40000000690000600000	C5P08-5832A1	SVEAC4-4M
1D255-16-6	OSPP40000000700000000000	C5P10-48F4A1XG166	SVEAC4-4MV
1D255-16-8	OSPP40000000700000000000	C5P12-6184A1	SVEAC6-6F
1D255-20-12	OSPP40000000700000200000	C5P12-61F4A1013	SVEAC6-6FV
1D255-25-12	OSPP40000000700000200000	C5P12-6934A1152	SVEAC6-6M
1D256-10-4	OSPP400000000700000B00000	C5P12-69F4A1XG286	SVEAC8-8FE
1D256-12-5	OSPP400000000700000B00000	C5V06-350B1	SVEAC8-8FV
1D256-14-6	OSPP400000000700000G00000	C5V06-640B1	SVEAC8-8M
1D256-16-6	OSPP400000000700000G00000	C5V06-650B1	SVEAN4-4F
1D256-8-3	OSPP400000000700000H00000	C5V08-340B1	SVEAN4-4FE
1D258-10-4	OSPP400000000700000H00000	C5V08-350B1	SVEAN4-4FV
1D258-20-12	OSPP40000000700001000000	C5V08-351B1	SVEAN4-4M
1D258-25-12	OSPP40000000700001000000	C5V08-650B1	SVEAN8-8FE
1D258-30-16	OSPP40000000700003000000	C5V10-350B1	SVEAN8-8FV
1D270-12-6	OSPP40000000700003000000	C5V10-640B1	SVEAN8-8M
1D270-14-6	OSPP40000000700005000000	C5V10-650B1019	SVG4-1/2P
1D270-14-6C	OSPP40000000700005000000	C5V10-651B1019	SVG4-1/4P
1D270-16-8	OSPP40000000710005000000	C5V12-350B1	SVG4-1/8P
1D270-16-8C	OSPP40000000710005000000	C5V12-650B1	SVG4-3/8P
1D270-20-10	OSPP40000000720000000000	C5V12-651B1	SVH081K20
1D270-20-10C	OSPP40000000720000000000	C600B	SVH101S10
1D270-20-12	OSPP40000000720001000000	C600S	SVH101S30
1D270-20-8	OSPP40000000720001000000	C600S65	SVH101S30V
1D270-25-12	OSPP40000000750000000000	C6055-CAN-00	SVH161S50
1D270-25-12C	OSPP40000000750000000000	C620S	SVH162S50
1D270-25-16	OSPP40000000750000600000	C628-08FRLWJCW	SVHC12-12F
1D270-25-16C	OSPP40000000750000600000	C628-08FRLWJCW	SVHC12-12FE
1D270-30-16	OSPP400000000750000G00000	C63PB10-1/4	SVHC12-12FV
1D271-16-8	OSPP400000000750000G00000	C63PB10-3/8	SVHC12-12FVSL
1D271-20-12	OSPP400000000750000H00000	C63PB12-1/2	SVHC12-12M
1D271-25-12	OSPP400000000750000H00000	C63PB12-1/4	SVHC12-12MV
1D271-30-16	OSPP40000000750005000000	C63PB12-3/8	SVHC12-12RPV
1D273-20-12	OSPP40000000750005000000	C63PB14-1/2	SVHC16-16F
1D273-25-12	OSPP40000000750100000000	C63PB14-3/8	SVHC16-16FE
1D273-25-16	OSPP40000000750100000000	C63PB4-1/4	SVHC16-16FSL
1D273-30-16	OSPP40000000075010000B000	C63PB4-1/8	SVHC16-16FV
1D273-38-20	OSPP40000000075010000B000	C63PB6-1/4	SVHC16-16M
1D277-16-8	OSPP40000000755005000000	C63PB6-1/8	SVHC16-16MV
1D277-20-10	OSPP40000000755005000000	C63PB8-1/4	SVHC16-16RP
1D277-20-12	OSPP40000000765000000000	C63PB8-1/8	SVHC16-16RPV
1D277-25-12	OSPP40000000765000000000	C63PB8-3/8	SVHC20-20F
1D277-30-16	OSPP400000000770001A00000	C63PK10-1/2	SVHC20-20FE
1D277-38-20	OSPP400000000770001A00000	C63PK10-1/4	SVHC20-20FV
1D278-25-12	OSPP40000000788000000000	C63PK10-3/8	SVHC24-24F
1D278-30-16	OSPP40000000788000000000	C63PK12-1/2	SVHC24-24FSL

1D278-38-20	OSPP40000000790000600000	C63PK12-1/4	SVHC24-24FV
1D28X-10-04	OSPP40000000790000600000	C63PK12-3/8	SVHC24-24FVSL
1D28X-16-08	OSPP40000000800000000000	C63PK14-1/2	SVHC24-24M
1D2NX-10-04	OSPP40000000800000000000	C63PK14-3/8	SVHC32-32F
1D2NX-12-05	OSPP40000000080000000F000	C63PK4-1/4	SVHC32-32FV
1D2NX-14-06	OSPP40000000080000000F000	C63PK4-1/8	SVHC32-32FVSL
1D2NX-16-08	OSPP40000000800000400000	C63PK6-1/4	SVHC4-2F
1D2NX-16-08C	OSPP40000000800000400000	C63PK6-1/8	SVHC4-4F
1D2NX-20-10	OSPP40000000800000600000	C63PK8-1/4	SVHC4-4FSL
1D2NX-20-10C	OSPP40000000800000600000	C63PK8-1/8	SVHC4-4FV
1D2NX-25-12	OSPP400000000800000H00000	C63PK8-3/8	SVHC4-4FVSL
1D2NX-25-12C	OSPP400000000800000H00000	C63PMK4-1/4	SVHC4-4M
1D2NX-30-16	OSPP40000000800001000000	C63PMK4-1/8	SVHC4-4MSL
1D2NX-38-20	OSPP40000000800001000000	C63PMK6-1/4	SVHC4-4MV
1D2PC-12-05	OSPP40000000800004000000	C63PMK6-1/8	SVHC4-4RP
1D2PX-10-04	OSPP40000000800004000000	C63SPK10-1/4	SVHC4-4RPV
1D2PX-12-05	OSPP40000000800005000000	C63SPK10-3/8	SVHC6-6F
1D2PX-16-08	OSPP40000000800005000000	C63SPK4-1/8	SVHC6-6FSL
1D2PX-25-12	OSPP400000000800010H00000	C63SPK6-1/4	SVHC6-6FV
1D88X-6-04	OSPP400000000800010H00000	C63SPK6-1/8	SVHC6-6M
1D943-12-10	OSPP400000000800300G00000	C63SPK8-1/4	SVHC6-6RP
1D943-12-12	OSPP400000000800300G00000	C63SPK8-1/8	SVHC6-6RPV
1D943-16-16	OSPP40000000820000000000	C63SPK8-3/8	SVHC8-8F
1D943-6-6	OSPP40000000820000000000	C64PB10-1/4	SVHC8-8FE
1D943-8-6	OSPP40000000820001000000	C64PB10-3/8	SVHC8-8FSL
1D943-8-8	OSPP40000000820001000000	C64PB12-1/2	SVHC8-8FV
1D946-10-10	OSPP40000000820005000000	C64PB12-1/4	SVHC8-8M
1D946-10-8	OSPP40000000820005000000	C64PB12-3/8	SVHC8-8ME
1D946-12-10	OSPP40000000825005000000	C64PB14-1/2	SVHC8-8MV
1D946-12-12	OSPP40000000825005000000	C64PB14-3/8	SVHC8-8RP
1D946-12-8	OSPP40000000840000000000	C64PB4-1/4	SVHC8-8RPV
1D946-16-12	OSPP40000000840000000000	C64PB4-1/8	SVHN12-12F
1D946-16-16	OSPP40000000850000000000	C64PB6-1/4	SVHN12-12FE
1D946-20-20	OSPP40000000850000000000	C64PB6-1/8	SVHN12-12FV
1D946-2-4	OSPP40000000085000000F000	C64PB8-1/4	SVHN12-12M
1D946-4-4	OSPP40000000085000000F000	C64PB8-1/8	SVHN12-12MV
1D946-4-5	OSPP40000000850000606000	C64PB8-3/8	SVHN12-12RPV
1D946-4-6	OSPP40000000850000606000	C64PK10-1/4	SVHN16-16F
1D946-6-4	OSPP400000000850000G00000	C64PK10-3/8	SVHN16-16FE
1D946-6-5	OSPP400000000850000G00000	C64PK12-1/4	SVHN16-16FV
1D946-6-6	OSPP40000000850001000000	C64PK12-3/8	SVHN16-16M
1D946-6-8	OSPP40000000850001000000	C64PK14-1/2	SVHN16-16MV
1D946-8-10	OSPP40000000850005000000	C64PK14-3/8	SVHN16-16RP
1D946-8-4	OSPP40000000850005000000	C64PK4-1/4	SVHN16-16RPV
1D946-8-6	OSPP40000000855000706000	C64PK4-1/8	SVHN20-20F
1D946-8-8	OSPP40000000855000706000	C64PK6-1/4	SVHN20-20FV
1D948-10-10	OSPP40000000860000000000	C64PK6-1/8	SVHN20-20M
1D948-10-8	OSPP40000000860000000000	C64PK8-1/4	SVHN20-20RP
1D948-12-10	OSPP40000000860005000000	C64PK8-1/8	SVHN24-24F
1D948-12-12	OSPP40000000860005000000	C64PK8-3/8	SVHN24-24FV
1D948-12-12C	OSPP40000000870000000000	C64PMK4-1/4	SVHN24-24M
1D948-12-8	OSPP40000000870000000000	C64PMK4-1/8	SVHN32-32F
1D948-16-12	OSPP40000000880000000000	C64PMK6-1/4	SVHN32-32FV

1D948-16-16	OSPP40000000880000000000	C64PMK6-1/8	SVHN4-4F
1D948-20-16	OSPP40000000900000000000	C64SPB10-1/4	SVHN4-4FV
1D948-20-20	OSPP40000000900000000000	C64SPB10-3/8	SVHN4-4M
1D948-2-4	OSPP40000000900004000000	C64SPB12-1/2	SVHN4-4MV
1D948-24-24	OSPP40000000900004000000	C64SPB12-1/4	SVHN4-4RP
1D948-32-32	OSPP40000000900005000000	C64SPB12-3/8	SVHN4-4RPV
1D948-4-4	OSPP40000000900005000000	C64SPB4-1/8	SVHN6-6F
1D948-4-5	OSPP40000000900100000000	C64SPB6-1/4	SVHN6-6FV
1D948-4-6	OSPP40000000900100000000	C64SPB6-1/8	SVHN6-6M
1D948-6-4	OSPP40000000914000000000	C64SPB8-1/4	SVHN6-6RP
1D948-6-5	OSPP40000000914000000000	C64SPB8-1/8	SVHN6-6RPV
1D948-6-6	OSPP40000000914005000000	C64SPB8-3/8	SVHN8-8F
1D948-6-8	OSPP40000000914005000000	C64SPK6-1/4	SVHN8-8FE
1D948-8-10	OSPP40000000920000000000	C64SPK6-1/8	SVHN8-8FV
1D948-8-4	OSPP40000000920000000000	C64SPK8-1/4	SVHN8-8M
1D948-8-6	OSPP40000000921000000000	C64SPK8-1/8	SVHN8-8ME
1D948-8-8	OSPP40000000921000000000	C64SPK8-3/8	SVHN8-8MV
1D948-8-8C	OSPP40000000935000706000	C68PB4M5	SVHN8-8RP
1D955-12-12	OSPP40000000935000706000	C68PB6M5	SVHN8-8RPV
1D955-16-16	OSPP40000000950000000000	C68PB6M6	SVLA1006P07
1D955-4-4	OSPP40000000950000000000	C68PK4M5	SVLB1046E40U
1D955-6-6	OSPP40000000960000000000	C68PK6M5	SVLB1046E50N
1D955-8-8	OSPP40000000960000000000	C68PK8M12	SVLB1086E16N
1D955-8-8C	OSPP40000000960000600000	C68PK8M16	SVLB1086E25N
1D956-4-4	OSPP40000000960000600000	C68PMK4M5	SVLB1086E25S
1D956-6-5	OSPP40000000960000606000	C68PMK6M5	SVLB1086E32S
1D956-6-6	OSPP40000000960000606000	C68SPB4M5	SVLB1086E32U
1D956-8-8	OSPP40000000981000000000	C68SPB6M5	SVLB1086E40S
1D958-12-12	OSPP40000000981000000000	C68SPK4M5	SVLB1086E40U
1D958-16-16	OSPP40000000990000000000	C6901-00-G	SVLC246E32S
1D958-6-6	OSPP40000000990000000000	C690-231700B0-BF0P00-A400	SVLCVLR206P04
1D958-8-8	OSPP40000000995003000000	C690-431450B0-BF0P00-A000	SVLD546P20S
1D970-10-10	OSPP40000000995003000000	C690-431550B0-BF0P00-A000	SVLELR543P10N
1D970-10-8	OSPP40000001000000000000	C690-431550B0-BF0P00-A400	SVLELR543P10R
1D970-12-10	OSPP40000001000000000000	C690-431950B0-BF0P00-A000	SVLELR543P10T
1D970-12-12	OSPP40000000100000000F000	C690-431950B0-BF0P00-A400	SVLELR543P25N
1D970-12-8	OSPP40000000100000000F000	C690-432230C0-B00P00-A000	SVLELR543P25R
1D970-16-12	OSPP40000001000000200000	C690-432870E0-B00P00-A000	SVLELR543P25T
1D970-16-16	OSPP40000001000000200000	C690-433105F2-000P00-A400	SVLELR543P32N
1D970-6-6	OSPP40000001000000600000	C690-433145F1-B00P00-B400	SVLELR543P32R
1D970-8-6	OSPP40000001000000600000	C690-433145F2-000P00-A400	SVLELR543P32T
1D970-8-8	OSPP400000001000000D00000	C690-433156F1-000P00-A400	SVLELR548P32R
1D971-12-12	OSPP400000001000000D00000	C690-433180F2-B00P00-A400	SVLELR549P25N
1D971-16-16	OSPP400000001000000G00000	C6BL	SVLELR549P25R
1D971-20-20	OSPP400000001000000G00000	C6BU	SVPN1080E16N1PBF
1D971-24-24	OSPP400000001000000G0F000	C6G	SW13R-SP
1D973-12-12	OSPP400000001000000G0F000	C6PB10-1/4	SW4071
1D973-16-16	OSPP40000001000001000000	C6PB10-3/8	SW4071-OM
1D973-20-20	OSPP40000001000001000000	C6PB6-1/4	SW4072
1D973-24-24	OSPP40000001000005000000	C6PB6-3/8	SW4073
1D973-32-32	OSPP40000001000005000000	C6R	SW4074
1D977-20-20	OSPP40000000100010000B000	C6W	SW4075
1D978-12-12	OSPP40000000100010000B000	C6Y	SW4081

1D978-16-16	OSPP40000000001000100600000	C-75	SW4081-GY
1D978-20-20	OSPP40000000001000100600000	C800B	SW4082
1D978-24-24	OSPP40000000001035000000000	C800B20	SW4083
1D98X-4-04	OSPP40000000001035000000000	C800S	SW4084
1D98X-6-04	OSPP40000000001035000600000	C800S65	SW4085
1D991N-6-6C	OSPP40000000001035000600000	C800S-M	SW4091
1D991N-6-8C	OSPP40000000001045000000000	C820S	SW4872
1D991N-8-10	OSPP40000000001045000000000	C8BL	SW6071
1D9BS-4-04	OSPP40000000001045000200000	C8BMB12M16	SW6071-GY
1D9EH-08-08	OSPP40000000001045000200000	C8BMB12M22	SW6071-OM
1D9EH-12-12	OSPP40000000001045001000000	C8BPL6/8M10	SW6071-TG
1D9EH-16-16	OSPP40000000001045001000000	C8BPL6/8M12	SW6072
1D9EH-20-20	OSPP40000000001050000000000	C8BPL6/8M12X125	SW6073
1D9EX-4-012	OSPP40000000001050000000000	C8BRAB8M12	SW6074
1D9LX-4-03	OSPP40000000105000000F000	C8BU	SW6075
1D9LX-4-04	OSPP40000000105000000F000	C8CA-E32/2R00	SW6081
1D9NX-4-04	OSPP40000000001050000200000	C8CA-E32/2T00	SW6081-TG
1D9NX-4-04C	OSPP40000000001050000200000	C8G	SW6082
1D9PC-4-04	OSPP400000001050000A00000	C8R	SW6083
1D9PC-6-05	OSPP400000001050000A00000	C8UNPMB10M12	SW6085
1D9PC-6-06	OSPP40000000001050004000000	C8UNPMB10M16	SW6872
1D9PC-8-06	OSPP40000000001050004000000	C8UNPMB12M12	SW6882
1D9PC-8-08	OSPP40000000001050005000000	C8UNPMB12M16	SW8071
1D9PX-12-10	OSPP40000000001050005000000	C8UNPMB12M22	SW8072
1D9PX-12-12	OSPP40000000001090000600000	C8UNPMB16M16	SW8073
1D9PX-2-02	OSPP40000000001090000600000	C8UNPMB16M22	SW8074
1D9PX-2-03	OSPP40000000001100000000000	C8UNPMB6M10	SW8075
1D9PX-2-03C2	OSPP40000000001100000000000	C8UNPMB6M12	SW8081
1D9PX-4-03	OSPP40000000001100000200000	C8UNPMB6M16	SW8082
1D9PX-4-04	OSPP40000000001100000200000	C8UNPMB6M22	SW8083
1D9PX-6-05	OSPP40000000001100000600000	C8UNPMB8M12	SW8872
1D9PX-6-06	OSPP40000000001100000600000	C8UNPMB8M16	SW8882
1D9PX-8-06	OSPP40000000001100000606000	C8UNPMB8M22	SWB2200
1D9PX-8-08	OSPP40000000001100000606000	C8W	SWB4400
1D9YX-12-10	OSPP400000001100000D00000	C8Y	SWB6600
1D9YX-12-12C	OSPP400000001100000D00000	C92N-12	SWB8800
1D9YX-16-12	OSPP40000000001120000000000	C92N-16	SW-CLIP
1D9YX-2-03	OSPP40000000001120000000000	C92N-4	SWF4-35
1D9YX-4-03	OSPP400000001125200G00000	C92N-6	SWF4-5
1D9YX-4-04	OSPP400000001125200G00000	C92N-8	SWF4-65
1D9YX-4-04C2	OSPP40000000001140000000000	C92N-8SS	SWF6-35
1D9YX-6-06	OSPP40000000001140000000000	C963-008	SWF6-5
1D9YX-8-06	OSPP40000000001140000600000	C963-008	SWF6-65
1D9YX-8-08	OSPP40000000001140000600000	C963-154	SWF8-35
1DAB-10-05	OSPP40000000001150000000000	C963-154	SWF8-5
1DAB-12-06	OSPP40000000001150000000000	C9RG-10	SWF8-65
1DAB-4-025	OSPP40000000001180000600000	C9RG-10-V	SWITCHCOVER/SH5
1DAB-6-025	OSPP40000000001180000600000	C9RG-12	SWITCHCOVER/SH5
1DAB-8-04	OSPP40000000001200000000000	C9RG-12-V	SWK2202
1DD44BL	OSPP40000000001200000000000	C9RG-14	SWK4402
1DK46-12-6	OSPP40000000001200000004000	C9RG-14-V	SWK6602
1DK46-15-8	OSPP40000000001200000004000	C9RG-16	SWK8802
1DK46-18-10	OSPP40000000001200000200000	C9RG-16-V	SWKO4400

1DK48-12-6	OSPP40000000120000020000 0	C9RG-20	SWKO6600
1DW48-18-10	OSPP40000000120000060000 0	C9RG-20-V	SWKO8800
1DX46-18-10	OSPP40000000120000060000 0	C9RG-25	SWO2200
1DX48-18-10	OSPP40000000120000070000 0	C9RG-25-V	SWO2200-TO
1E648-12-12	OSPP40000000120000070000 0	C9RG-30	SWO4400
1E648-16-16	OSPP40000000120000070600 0	C9RG-38	SWO4400-EPR
1E648-20-20	OSPP40000000120000070600 0	C9RG-38-V	SWO6600
1E648-8-6	OSPP40000000120000100000 0	C9RG-8	SWO6600-KO
1EA46-10-10	OSPP40000000120000100000 0	C9RG-8-V	SWO8800
1EA46-12-10	OSPP40000000120000500000 0	CA16047K	SWTC2
1EA46-12-12	OSPP40000000120000500000 0	CA27100A-000-001	SWTC4
1EA46-16-12	OSPP40000000120010000000 0	CA55613-001	SWTC6
1EA46-16-16	OSPP40000000120010000000 0	CAC10-15A-1	SWTC8
1EA46-4-4	OSPP40000000123000060000 0	CAC10-60-1	SWVE04LLMCF
1EA46-6-4	OSPP40000000123000060000 0	CAC10-60A-1	SWVE04LLMOMDCF
1EA46-6-6	OSPP40000000125000000000 0	CACALIN	SWVE04LLRCF
1EA46-8-6	OSPP40000000125000000000 0	CACLLFN	SWVE04LLRKDSCF
1EA46-8-8	OSPP40000000125000070000 0	CAEG-LGN 140BAR	SWVE04LLRKDSOMDCF
1EA48-10-10	OSPP40000000125000070000 0	CAF1055140	SWVE04LLROHSCF
1EA48-12-10	OSPP40000000125000070600 0	CAF1455200	SWVE04LLROMDCF
1EA48-12-12	OSPP40000000125000070600 0	CAF1705/160	SWVE04LLRTN1CFX
1EA48-16-12	OSPP400000001250000G00000	CAF70590	SWVE04ZLLMCF
1EA48-16-16	OSPP400000001250000G00000	CAGA-LHN	SWVE04ZLLRKDSCF
1EA48-20-20	OSPP40000000125000400000 0	CAGK-LHN	SWVE06LLMCF
1EA48-4-4	OSPP40000000125000400000 0	CAL14516	SWVE06LLMKDSOMDCF
1EA48-6-4	OSPP40000000125010000000 0	CAL7016	SWVE06LLMOMDCF
1EA48-6-6	OSPP40000000125010000000 0	CAP.1163.10	SWVE06LLMSCHUCF
1EA48-8-6	OSPP40000000125010000B000	CAP.1163.40	SWVE06LLRCF
1EA48-8-8	OSPP40000000125010000B000	CAP.1380.10	SWVE06LLRKDSCF
1EA70-12-12	OSPP40000000126500500000 0	CAP.1380.40	SWVE06LLRKDSOMDCF
1EA70-16-16	OSPP40000000126500500000 0	CAP.1730.10.10	SWVE06LLROHSCF
1EA70-8-8	OSPP40000000130000000000 0	CAP.1730.10.5	SWVE06LLROMDCF
1EA77-10-10	OSPP40000000130000000000 0	CAP.1730.40.10	SWVE06LLRTN1CFX
1EA77-12-10	OSPP40000000130000020000 0	CAP.1730.40.5	SWVE06LMCF
1EA77-12-12	OSPP40000000130000020000 0	CAP012D	SWVE06LMDPR71CF
1EA77-12-16	OSPP40000000130000040000 0	CAP012H	SWVE06LMKDSOMDCF
1EA77-16-12	OSPP40000000130000040000 0	CAP012L	SWVE06LMOMDCF
1EA77-16-16	OSPP40000000130000060000 0	CAP024D	SWVE06LRCF
1EA77-20-20	OSPP40000000130000060000 0	CAP024H	SWVE06LRKDSOMDCF
1EA77-8-8	OSPP400000001300000A00000	CAP024L	SWVE06LROMDCF
1EB46-12-10	OSPP400000001300000A00000	CAP024LD	SWVE06SMCF
1EB46-12-12	OSPP400000001300000B00000	CAP10537/F	SWVE06SMKDSOMDCF
1EB46-16-16	OSPP400000001300000B00000	CAP10539	SWVE06SMOMDCF
1EB46-4-4	OSPP40000000130000500000 0	CAP115D	SWVE06SRCF
1EB46-6-6	OSPP40000000130000500000 0	CAP14537/B	SWVE06SRKDSCF
1EB46-8-8	OSPP400000001315000A00000	CAP14537/F	SWVE06SRKDSOMDCF
1EB48-12-10	OSPP400000001315000A00000	CAP160	SWVE06SROHSOMDCF
1EB48-12-12	OSPP40000000132000000000 0	CAP20537/F	SWVE06SROMDCF
1EB48-16-16	OSPP40000000132000000000 0	CAP230D	SWVE06ZLLRKDSCF
1EB48-4-4	OSPP40000000132000100000 0	CAP230M	SWVE06ZLMKDSCF
1EB48-6-6	OSPP40000000132000100000 0	CAP7011	SWVE06ZLRCF
1EB48-8-8	OSPP40000000133000060000 0	CAP7039	SWVE06ZLRKDSCF
1EB77-10-10	OSPP40000000133000060000 0	CAR14538A	SWVE06ZSMKDSCF

1EB77-12-10	OSPP40000000013300004000000	CAR2-H1545	SWVE06ZSRKDSCF
1EB77-12-12	OSPP40000000013300004000000	CAR2-K1321	SWVE08LLMCF
1EB77-16-16	OSPP40000000013400005000000	CAR2-K1551	SWVE08LLMKDSOMDCF
1EB77-20-20	OSPP40000000013400005000000	CARG-15	SWVE08LLMOMDCF
1EB77-8-8	OSPP40000000013500000000000	CARG-15-V	SWVE08LLRCF
1EC46-10-10	OSPP40000000013500000000000	CARG-18	SWVE08LLRKDSCF
1EC46-10-8	OSPP40000000013500000600000	CARG-18-V	SWVE08LLRKDSOMDCF
1EC46-12-10	OSPP40000000013500000600000	CARG-20-V	SWVE08LLROMDCF
1EC46-12-12	OSPP40000000013500000606000	CARG-22	SWVE08LLRTN1CFX
1EC46-16-12	OSPP40000000013500000606000	CARG-28	SWVE08LMCF
1EC46-16-16	OSPP40000000013500000706000	CARG-28-V	SWVE08LMKDSCF
1EC46-4-4	OSPP40000000013500000706000	CARG-35	SWVE08LMKDSOMDCF
1EC46-6-4	OSPP400000001350000H00000	CARG-42	SWVE08LMKDSVITOMDCF
1EC46-6-6	OSPP400000001350000H00000	CARG-6	SWVE08LMOMDCF
1EC46-8-6	OSPP40000000013500003000000	CARG-6-V	SWVE08LRCF
1EC46-8-8	OSPP40000000013500003000000	CARRYING CASE	SWVE08LRKDSCF
1EC48-10-10	OSPP40000000013500005000000	CAS012D	SWVE08LRKDSOMDCF
1EC48-10-8	OSPP40000000013500005000000	CAS024A	SWVE08LROMDCF
1EC48-12-10	OSPP40000000013520000000000	CAS024D	SWVE08LRTN1CFX
1EC48-12-12	OSPP40000000013520000000000	CAS024L	SWVE08SMCF
1EC48-16-12	OSPP40000000013600000000000	CAS115D	SWVE08SMKDSOMDCF
1EC48-16-16	OSPP40000000013600000000000	CAS230D	SWVE08SMOMDCF
1EC48-4-4	OSPP40000000013700001000000	CAV165C33R	SWVE08SRCF
1EC48-6-6	OSPP40000000013700001000000	CAVOBRIDGEX1-2SLVDN	SWVE08SRKDSCF
1EC48-8-6	OSPP40000000014000000000000	CAVOCL422	SWVE08SROHSOMDCF
1EC48-8-8	OSPP40000000014000000000000	CAVOENCX12,5PM-ISLVDN-C	SWVE08SROMDCF
1EC70-12-12	OSPP40000000140000000F000	CAVOMOT1,5X15PM-I115	SWVE08ZLRKDSCF
1EC70-16-16	OSPP40000000140000000F000	CAVOMOT1,5X2,5PM-8105	SWVE10LMCF
1EC70-8-8	OSPP40000000014000006000000	CAVOMOT1,5X3PM-M70-C	SWVE10LMDPR71CF
1EC77-10-10	OSPP40000000014000006000000	CAVOMOT1,5X5PM-M56	SWVE10LMKDSOMDCF
1EC77-12-10	OSPP40000000014000006060000	CAVOMOT2,5X10PM-I145-C	SWVE10LMOMDCF
1EC77-12-12	OSPP40000000014000006060000	CAVOMOT25X10PF-SL265	SWVE10LR3/8CF
1EC77-16-12	OSPP40000000014000007000000	CAVOMOT6X10PM-I205-C	SWVE10LRCF
1EC77-16-16	OSPP40000000014000007000000	CAVOMOTA1,5X15PM-I82	SWVE10LRDPR71CF
1EC77-20-20	OSPP40000000014500000000000	CAVOMOTA1,5X3PF-I60	SWVE10LRKDSOMDCF
1EC77-8-8	OSPP40000000014500000000000	CAVORESX10PM-I890	SWVE10LRKDSVITOMDCF
1ECR1-316	OSPP40000000145000000F000	CAVORESX10PM-IHIDRIVE	SWVE10LROMDCF
1EDSMA760C18500	OSPP40000000145000000F000	CAVORESX10PM-ISPD/TWIN-C	SWVE10SMCF
1EDSMA760C18500	OSPP40000000014500002000000	CAVORESX15PM-ITPD	SWVE10SMKDSOMDCF
1EDSMS250C16900	OSPP40000000014500002000000	CAVORESX2,5PM-8SLVD	SWVE10SMOMDCF
1EDSMS250C16900	OSPP40000000145000M000000	CAVORESX3PM-ISLVDN	SWVE10SRCF
1EDSMS430C39500	OSPP40000000145000M000000	CAVORESX3PM-MSLVD-C	SWVE10SRKDSOMDCF
1EDSMS430C39500	OSPP40000000014750006000000	CAVORESX5PM-MSLVD	SWVE10SROMDCF
1EDTMA350C48000	OSPP40000000014750006000000	CAVOSERIALTOSLVDN	SWVE10ZLMKDSCF
1EDTMA350C48000	OSPP40000000014850000000000	CB016A13410W	SWVE10ZLRKDSCF
1EDTMF150C23500	OSPP40000000014850000000000	CB016A16410W	SWVE10ZSRKDSCF
1EDTMF150C23500	OSPP40000000014900050000000	CB025A13510W	SWVE12LM18OMDCF
1EDTMF451C35500	OSPP40000000014900050000000	CB025A16510W	SWVE12LM18X1.5CF
1EDTMF451C35500	OSPP40000000014950006060000	CB032A16610W	SWVE12LMCF
1EDTMS250C18400	OSPP40000000014950006060000	CB040A13810W	SWVE12LMKDSCF
1EDTMS250C18400	OSPP40000000014950007060000	CB040A16810W	SWVE12LMKDSOMDCF
1EDTMS280C32400	OSPP40000000014950007060000	CB063A131210W	SWVE12LMOMDCF
1EDTMS280C32400	OSPP40000000015000000000000	CB063A17010W	SWVE12LMTN1CFX

1EDTMS350C48000	OSPP40000000001500000000000	CB080A18010W	SWVE12LR1/4KDSCF
1EDTMS350C48000	OSPP40000000001500000200000	CB1	SWVE12LR1/4KDSOMDCF
1EE1-316	OSPP40000000001500000200000	CB1002AR206001	SWVE12LRCF
1EN46-10-5	OSPP400000000001500000D00000	CB1002DR100603	SWVE12LRKDSOMDCF
1EN46-12-6	OSPP400000000001500000D00000	CB101AS30	SWVE12LROMDCF
1EN46-15-8	OSPP400000000001500000G00000	CB101BS20	SWVE12LRTN1CFX
1EN46-18-10	OSPP400000000001500000G00000	CB101BS30	SWVE12SMCF
1EN46-22-12	OSPP400000000001500000H00000	CB101CS30	SWVE12SMKDSOMDCF
1EN48-12-6	OSPP400000000001500000H00000	CB102SAR1000	SWVE12SMOHSCF
1EN48-15-8	OSPP40000000001500001000000	CB152SAR2002	SWVE12SMOMDCF
1EN48-18-10	OSPP40000000001500001000000	CB2	SWVE12SRCF
1EN48-22-12	OSPP40000000001500004000000	CB3	SWVE12SRKDSOMDCF
1EN48-8-4	OSPP40000000001500004000000	CB369M10	SWVE12SROMDCF
1ET1-316	OSPP40000000150000400F000	CB4401	SWVE12SRTNCFX
1ET1-B	OSPP40000000150000400F000	CB4401-SOG	SWVE12ZLRKDSCF
1ET46-10-5	OSPP40000000001500005000000	CB4401-SOGWO	SWVE12ZSMKDSCF
1ET46-12-6	OSPP40000000001500005000000	CB4402	SWVE12ZSRKDSCF
1ET46-15-8	OSPP40000000001500201000000	CB52SAR2000	SWVE14SMCF
1ET46-22-12	OSPP40000000001500201000000	CB6-02-000	SWVE14SMOMDCF
1ET48-12-6	OSPP400000000001520000A00000	CB6-02-000	SWVE14SRCF
1ET48-15-8	OSPP400000000001520000A00000	CB6-02-FM0	SWVE14SROMDCF
1ET48-18-10	OSPP40000000001520001000000	CB6-02-FM0	SWVE15LMCF
1ET48-22-12	OSPP40000000001520001000000	CB6-02-M00	SWVE15LMKDSOMDCF
1ET48-8-4	OSPP40000000001530000000000	CB6-02-M00	SWVE15LMOMDCF
1ETSMVC00P14800	OSPP40000000001530000000000	CB6-03-000	SWVE15LMSA3OMDCFVOL
1ETSMVC00P14800	OSPP40000000001530000600000	CB6-03-000	SWVE15LMSA3VOMDCFVL
1EU46-10-5	OSPP40000000001530000600000	CB6-03-L00	SWVE15LMSA6OMDCFVOL
1EU46-12-6	OSPP40000000001530000606000	CB6-03-L00	SWVE15LMTNCFX
1EU46-15-8	OSPP40000000001530000606000	CB6-04-000	SWVE15LRCF
1EU48-15-8	OSPP400000000001530000G00000	CB6-04-000	SWVE15LRKDSOMDCF
1EU48-18-10	OSPP400000000001530000G00000	CB6-04-F00	SWVE15LROMDBLKOEL
1EV0M310	OSPP40000000001550000000000	CB6-04-F00	SWVE15LROMDCF
1EV0M310	OSPP40000000001550000000000	CB6601	SWVE15ZLRCF
1EV1A310	OSPP40000000001550000200000	CB6601-SOG	SWVE15ZLRKDSCF
1EV1A310	OSPP40000000001550000200000	CB6-C2-000	SWVE16SMCF
1EV1C310	OSPP40000000001550000600000	CB6-C2-000	SWVE16SMKDSOMDCF
1EV1C310	OSPP40000000001550000600000	CB6-C2-F00	SWVE16SMOMDCF
1EV1J310	OSPP40000000001550001000000	CB6-C2-F00	SWVE16SRCF
1EV1J310	OSPP40000000001550001000000	CB6-C2-FL0	SWVE16SRKDSCF
1EV1M310	OSPP40000000001560000000000	CB6-C2-FL0	SWVE16SRKDSOMDCF
1EV1M310	OSPP40000000001560000000000	CB6-C2-FM0	SWVE16SROMDCF
1EV3C310	OSPP40000000001560003000000	CB6-C2-FM0	SWVE18LMCF
1EV3C310	OSPP40000000001560003000000	CB6-C2-M00	SWVE18LMKDSCF
1EV3J310	OSPP40000000001580004000000	CB6-C2-M00	SWVE18LMKDSOMDCF
1EV3J310	OSPP40000000001580004000000	CB6-C3-000	SWVE18LMOMDCF
1EV3M310	OSPP40000000001600000000000	CB6-C3-000	SWVE18LRCF
1EV3M310	OSPP40000000001600000000000	CB6-C3-F00	SWVE18LRKDSOMDCF
1EV3N310	OSPP40000000160000000F000	CB6-C3-F00	SWVE18LRKDSVITOMDCF
1EV3N310	OSPP40000000160000000F000	CB6-C3-G00	SWVE18LROMDCF
1F248-13-5	OSPP40000000001600000600000	CB6-C3-G00	SWVE20SMCF
1F248-13-6	OSPP40000000001600000600000	CB6-C3-L00	SWVE20SMOMDCF
1F248-17-8	OSPP40000000001600001000000	CB6-C3-L00	SWVE20SRCF
1F446-13-6	OSPP40000000001600001000000	CB6-C4-000	SWVE20SRCFX

1F446-17-8	OSPP40000000016000040000000	CB6-C4-000	SWVE20SRKDSOMDCF
1F448-13-4	OSPP40000000016000040000000	CB6-C4-F00	SWVE20SROMDCF
1F448-13-5	OSPP40000000016000050000000	CB6-C4-F00	SWVE22LMCF
1F448-13-6	OSPP40000000016000050000000	CB6-C4-FM0	SWVE22LMKDSOMDCF
1F448-17-8	OSPP40000000016100000000000	CB6-C4-FM0	SWVE22LMOMDCF
1F448-21-10	OSPP40000000016100000000000	CB6-C4-G00	SWVE22LRCF
1F448-27-12	OSPP40000000016250000000000	CB6-C4-G00	SWVE22LRKDSOMDCF
1F448-33-16	OSPP40000000016250000000000	CB6-C4-L00	SWVE22LROMDCF
1F455-13-5	OSPP40000000016250010000000	CB6-C4-L00	SWVE22ZLRKDSCF
1F456-17-6	OSPP40000000016250010000000	CB6-C4-M00	SWVE25SROMDCF
1F470-13-6	OSPP40000000016250050000000	CB6-C4-M00	SWVE28LMCF
1F470-17-8	OSPP40000000016250050000000	CB7-04-000	SWVE28LRCF
1F470-21-10	OSPP40000000016400007000000	CB7-04-000	SWVE28LRKDSOMDCF
1F470-27-12	OSPP40000000016400007000000	CB902HL005	SWVE28LROMDCF
1F470-33-16	OSPP40000000016400007060000	CB9901	SWVE30SROMDCF
1F473-27-12	OSPP40000000016400007060000	CB9901-K	SWVE35LRKDSOMDCF
1F473-33-16	OSPP40000000016800000000000	CB9901-SOG	SWVE35LROMDCF
1F4PX-13-05	OSPP40000000016800000000000	CB9901-SOGWO	SWVE38SRCF
1F648-14-6	OSPP40000000017000000000000	CBCALANEBA	SWVE42LRKDSOMDCF
1F648-20-10	OSPP40000000017000000000000	CBCALANEBY	SX2222
1F946-20-10	OSPP40000000017000002000000	CBCALHN	SX4444
1F946-22-12	OSPP40000000017000002000000	CBCALIN	SX6666
1F946-25-12	OSPP40000000017250040000000	CBEALANBBY	SX8888
1F948-10-4	OSPP40000000017250040000000	CBEALBNBBA	SY1072T-E05-IP
1F948-14-6	OSPP40000000017300000000000	CBFBLHN	SY561T
1F948-18-10	OSPP40000000017300000000000	CBGALAN	SY561T-B
1F948-20-10	OSPP40000000017300006000000	CB-M12-4P-2M	SY561T-E05
1F948-22-12	OSPP40000000017300006000000	CB-M12-4P-2M	SY562L
1F948-22-16	OSPP40000000017500000000000	CB-M8-4P-2M	SY562T
1F948-25-12	OSPP40000000017500000000000	CB-M8-4P-2M	SY562T-L
1F948-30-16	OSPP40000000017500006000000	CB-M8-4P-5M	SY563L
1F948-6-4	OSPP40000000017500006000000	CB-M8-4P-5M	SY563T
1F955-6-3	OSPP40000000017500007000000	CB-M8-4P-5M-90	SY563T-B
1FA46-12-5	OSPP40000000017500007000000	CB-M8-4P-5M-90	SY563T-K
1FA48-12-5	OSPP40000000017500007060000	CBMB10-1/4	SY871T
1FA48-12-6	OSPP40000000017500007060000	CBMB10-3/8	SY871T-K-IP
1FA48-12-8	OSPP40000000018000000000000	CBMB12-1/2	SY871T-V
1FF1-316	OSPP40000000018000000000000	CBMB12-3/8	SY872L
1FF1-B	OSPP40000000018000006000000	CBMB16-1/2	SY872T
1FF33BL	OSPP40000000018000006000000	CBMB20-3/4	SY872T-B
1FF33MS	OSPP40000000018000040000000	CBMB4-1/8	SY873T
1FF633BL	OSPP40000000018000040000000	CBMB6-1/4	SY873T-E05
1FFMSS	OSPP40000000018000050000000	CBMB6-1/8	SY873T-K
1FG46-13-5	OSPP40000000018000050000000	CBMB8-1/4	SY873T-L
1FG46-17-8	OSPP40000000018300006000000	CBMB8-1/8	SYM2647-6
1FG46-21-10	OSPP40000000018300006000000	CBPL10/12-3/8	SYM2647-6
1FG48-13-5	OSPP40000000018300006060000	CBPL2.7/4-1/8	S-Z3
1FG48-13-6	OSPP40000000018300006060000	CBPL4/6-1/4	T0255
1FG48-17-8	OSPP40000000018500006000000	CBPL4/6-1/8	T0256
1FG48-21-10	OSPP40000000018500006000000	CBPL6/8-1/4	T04LL71X
1FG48-27-12	OSPP40000000018800000000000	CBPL6/8-1/8	T04LLCF
1FG48-33-16	OSPP40000000018800000000000	CBPL8/10-1/4	T04LLCFX
1FG55-13-5	OSPP40000000019000000000000	CBPL8/10-3/8	T04LLSA671X

1FG70-13-6	OSPP40000000019000000000000	CBRAB10-1/4	T04ZLLCF
1FG70-17-8	OSPP40000000019100000000000	CBRAB6-1/4	T06L71
1FG70-21-10	OSPP40000000019100000000000	CBRAB6-1/8	T06L71X
1FG70-27-12	OSPP40000000019100000706000	CBRAB8-1/4	T06LCF
1FG70-33-16	OSPP40000000019100000706000	CBS1	T06LCFX
1FG73-27-12	OSPP40000000019100001000000	CBS2	T06LL71
1FG73-33-16	OSPP40000000019100001000000	CBS3	T06LL71X
1FGMSS	OSPP40000000019100004000000	CBZ 10-1/2K-SS	T06LLCF
1FSC1N-316	OSPP40000000019100004000000	CBZ 10-1/2-SS	T06LLCFX
1FSC2N-316	OSPP40000000019400000000000	CBZ 10-1/4K-SS	T06LLMS
1FU46-12-12	OSPP40000000019400000000000	CBZ 10-1/4-SS	T06LMS
1FU46-16-16	OSPP40000000020000000000000	CBZ 10-1/8K-SS	T06LMSX
1FU46-4-4	OSPP40000000020000000000000	CBZ 10-1/8-SS	T06LSPH71
1FU46-6-6	OSPP40000000020000000200000	CBZ 10-3/8K-SS	T06S71
1FU46-8-8	OSPP40000000020000000200000	CBZ 10-3/8-SS	T06S71X
1FU48-12-12	OSPP40000000020000003000000	CBZ 12-1/2K-SS	T06SCF
1FU48-16-16	OSPP40000000020000003000000	CBZ 12-1/2-SS	T06SCFX
1FU48-4-4	OSPP40000000020020003000000	CBZ 12-1/4K-SS	T06SMS
1FU48-6-4	OSPP40000000020020003000000	CBZ 12-1/4-SS	T06SMSX
1FU48-6-6	OSPP40000000020200001000000	CBZ 12-3/4K-SS	T06ZL71
1FU48-8-8	OSPP40000000020200001000000	CBZ 12-3/4-SS	T06ZLCF
1FU55-4-4	OSPP40000000020500000000000	CBZ 12-3/8K-SS	T06ZLLCF
1FU56-6-6	OSPP40000000020500000000000	CBZ 12-3/8-SS	T06ZS71
1FU73-12-12	OSPP40000000020500000600000	CBZ 16-1/2K-SS	T06ZSCF
1GAPX-12-04BF	OSPP40000000020500000600000	CBZ 16-1/2-SS	T08L71
1GAPX-8-04BF	OSPP40000000020500000606000	CBZ 16-3/8K-SS	T08L71X
1GAPX-8-04C	OSPP40000000020500000606000	CBZ 20-3/4-SS	T08LCF
1GD48-8-4	OSPP40000000020600000000000	CBZ 25-1-SS	T08LCFX
1GG44B	OSPP40000000020600000000000	CBZ 3-1/8-SS	T08LDPR71MS
1GG44MS	OSPP40000000021000000000000	CBZ 6-1/2K-SS	T08LL71
1GG44MSS	OSPP40000000021000000000000	CBZ 6-1/2-SS	T08LL71X
1GU46-4-4	OSPP40000000021000000706000	CBZ 6-1/4K-SS	T08LLCF
1GU46-6-6	OSPP40000000021000000706000	CBZ 6-1/4-SS	T08LLCFX
1GU46-8-8	OSPP40000000021000000800000	CBZ 6-1/8K-SS	T08LLMS
1GU48-4-4	OSPP40000000021000000800000	CBZ 6-1/8-SS	T08LLMSX
1GU48-6-6	OSPP40000000021050001000000	CBZ 6-3/8K-SS	T08LMS
1GU48-8-8	OSPP40000000021050001000000	CBZ 6-3/8-SS	T08LMSX
1GU55-8-8	OSPP40000000021400000000000	CBZ 8-1/2K-SS	T08LSPH71
1GU71-12-12	OSPP40000000021400000000000	CBZ 8-1/2-SS	T08S71
1GU71-16-16	OSPP40000000021500000000000	CBZ 8-1/4K-SS	T08S71X
1HHP3B	OSPP40000000021500000000000	CBZ 8-1/4-SS	T08SCF
1HP3B	OSPP40000000022000000000000	CBZ 8-1/8K-SS	T08SCFX
1HP3MS	OSPP40000000022000000000000	CBZ 8-1/8-SS	T08SMS
1HP3MSS	OSPP40000000022000000200000	CBZ 8-3/8K-SS	T08SMSX
1HPMSS	OSPP40000000022000000200000	CBZ 8-3/8-SS	T08ZL71
1J055-6-6-SM	OSPP400000002200000A00000	CC-25-02H	T08ZLCF
1J055-8-6-SM	OSPP400000002200000A00000	CC3UA1D1R0005	T08ZLSSACF
1J146-10-10	OSPP400000002200000H00000	CC3UA1D1R0010	T08ZLVITCF
1J146-12-12	OSPP400000002200000H00000	CC3UA1D1R0050	T08ZS71
1J146-16-16	OSPP40000000022000005000000	CC3UA1F1R0002	T08ZSCF
1J146-4-4	OSPP40000000022000005000000	CC3UA1F1R0003	T101Q3
1J146-6-4	OSPP40000000022220204000000	CC3UA1F1R0005	T101Q3
1J146-6-6	OSPP40000000022220204000000	CC3UA1F1R0007	T10GRD024

1J146-8-6	OSPP40000000023000000000000	CC3UA1F1R0008	T10L71
1J146-8-8	OSPP40000000023000000000000	CC3UA1F1R0010	T10L71X
1J148-10-10	OSPP40000000023000003000000	CC3UA1F4R0005	T10LCF
1J148-12-12	OSPP40000000023000003000000	CC3UP0F4R0005	T10LCFX
1J148-16-16	OSPP40000000023450000000000	CC3UP1F1R0003	T10LDPR71CF
1J148-4-4	OSPP40000000023450000000000	CC3UP1F1R0005	T10LL71
1J148-6-4	OSPP40000000024000000600000	CC3UP1F1R0007	T10LLCF
1J148-6-6	OSPP40000000024000000600000	CC3UP1F1R0008	T10LLCFX
1J148-8-6	OSPP40000000024000010600000	CC3UP1F1R0010	T10LLMS
1J148-8-8	OSPP40000000024000010600000	CC3UP1F1R0020	T10LMS
1J155-4-4	OSPP40000000024100000000000	CC3UP1F1R0030	T10LMSX
1J155-6-6	OSPP40000000024100000000000	CC3UP1F1R0035	T10LSPH71
1J170-10-10	OSPP40000000025000000000000	CC3UP2F1R0005	T10S71
1J170-8-8-SM	OSPP40000000025000000000000	CC3UP2F1R0020	T10S71X
1J546-10-10	OSPP40000000025000003000000	CC3UP2F1R0030	T10SCF
1J546-12-12	OSPP40000000025000003000000	CC3UQ1D1R0005	T10SCFX
1J546-4-4	OSPP40000000025000004000000	CC3UQ1D1R0010	T10SMS
1J546-6-4	OSPP40000000025000004000000	CC3UQ1D1R0015	T10SMSX
1J546-6-6	OSPP40000000026200000000000	CC3UQ1D1R0020	T10ZL71
1J546-8-6	OSPP40000000026200000000000	CC3UQ1D1R0030	T10ZLCF
1J546-8-8	OSPP40000000026500000000000	CC3UQ1D1R0050	T10ZLSSACF
1J548-10-10	OSPP40000000026500000000000	CC3UR1D1R0005	T10ZLVITCF
1J548-12-12	OSPP40000000026750000000000	CC3UR1D1R0015	T10ZS71
1J548-4-4	OSPP40000000026750000000000	CC3UR1D1R0020	T10ZSCF
1J548-6-4	OSPP400000002750000G00000	CC3UR1D1R0030	T10ZSNBR71
1J548-6-6	OSPP400000002750000G00000	CC3UR1F1R0005	T1-1HD-12-1NEA
1J548-8-6	OSPP40000000028000000000000	CC3UR1F1R0010	T1-1HD-24-1NEA
1J548-8-8	OSPP40000000028000000000000	CC3UR1F1R0020	T1-2BL-24-1NEA
1J743-10-10-SM	OSPP40000000029400004000000	CC3UR1F1R0030	T12-C2-AKS0
1J743-12-12-SM	OSPP40000000029400004000000	CCCALBN	T12-C2-AKS0
1J743-16-16-SM	OSPP40000000030000000000000	CCL40	T12-C2-ARR0
1J743-8-6-SM	OSPP40000000030000000000000	CCL40-316SOG	T12-C2-ARR0
1J743-8-8-SM	OSPP40000000030701000000000	CCL50	T1-2HD-12-1NEA
1J746-10-10	OSPP40000000030701000000000	CCL60	T1-2HD-24-1NEA
1J746-10-12	OSPP40000000033000003000000	CCL60-316SOG	T12L71
1J746-10-8	OSPP40000000033000003000000	CCL90	T12L71X
1J746-12-10	OSPP40000000033000004000000	CCL90-316D	T12LCF
1J746-12-12	OSPP40000000033000004000000	CCL90-316SOG	T12LCFX
1J746-12-16	OSPP40000000034000000000000	CCL90-HCSOG	T12LDPR71CF
1J746-12-8	OSPP40000000034000000000000	CCLX120	T12LDPR71MS
1J746-16-12	OSPP40000000035000000000000	CCLX120-2507	T12LL71
1J746-16-16	OSPP40000000035000000000000	CCLX120-25-4MO	T12LLCF
1J746-20-16	OSPP40000000035000000F000	CCLX120-316SOG	T12LLCFX
1J746-20-20	OSPP40000000035000000F000	CCLX120-IN625	T12LLMS
1J746-4-4	OSPP40000000037000002000000	CCLX160	T12LMS
1J746-6-4	OSPP40000000037000002000000	CCLX160-316SOG	T12LMSX
1J746-6-5	OSPP40000000039000000000000	CCLX240	T12LOFF71
1J746-6-6	OSPP40000000039000000000000	CCLX40	T12LSPH71
1J746-6-8	OSPP40000000042000000000000	CCLX40-316SOG	T12S71
1J746-8-6	OSPP40000000042000000000000	CCLX60	T12S71X
1J746-8-8	OSPP40000000060000000000000	CCLX60-2507	T12SCF
1J748-10-10	OSPP40000000060000000000000	CCLX60-25-4MO	T12SCFX
1J748-10-12	OSPP40000010009000000000000	CCLX60-316SOG	T12SMS

1J748-10-8	OSPP40000100090000000000	CCLX60-IN625SG	T12SMSX
1J748-12-10	OSPP40000100260001000000	CCLX90	T12SSPH71
1J748-12-12	OSPP40000100260001000000	CCLX90-2507	T12ZL71
1J748-12-16	OSPP400000100300000G06000	CCLX90-316SOG	T12ZLCF
1J748-12-8	OSPP400000100300000G06000	CCP012A	T12ZLVITCF
1J748-16-12	OSPP40000100375000000000	CCP012AD	T12ZS71
1J748-16-16	OSPP40000100375000000000	CCP012D	T12ZSCF
1J748-20-16	OSPP40000100400000000000	CCP012H	T12ZSVITCF
1J748-20-20	OSPP40000100400000000000	CCP012HE	T14S71
1J748-24-24	OSPP40000100450000000000	CCP012L	T14S71X
1J748-4-4	OSPP40000100450000000000	CCP012LD	T14SCF
1J748-6-4	OSPP40000100550000000000	CCP012S	T14SCFX
1J748-6-5	OSPP40000100550000000000	CCP024A	T14SMS
1J748-6-6	OSPP40000100570000000000	CCP024AD	T14ZS71
1J748-6-8	OSPP40000100570000000000	CCP024D	T14ZSCF
1J748-8-4	OSPP40000100800000000000	CCP024DC	T15L71
1J748-8-6	OSPP40000100800000000000	CCP024H	T15L71X
1J748-8-8	OSPP40000100900000000000	CCP024HE	T15LCF
1J755-4-4	OSPP40000100900000000000	CCP024L	T15LCFX
1J755-6-6	OSPP40000101000000000000	CCP024LD	T15LDPR71MS
1J756-8-8	OSPP40000101000000000000	CCP024S	T15LMS
1J770-10-10-SM	OSPP40000101100000000000	CCP026D	T15LMSX
1J770-10-8-SM	OSPP40000101100000000000	CCP026HE	T15LOB3X
1J770-12-10-SM	OSPP40000010110000000F000	CCP115D	T15ZL71
1J770-12-12-SM	OSPP40000010110000000F000	CCP115M	T15ZLCF
1J770-16-12-SM	OSPP40000101600000000000	CCP230D	T15ZLNBR71
1J770-16-16-SM	OSPP40000101600000000000	CCP230M	T15ZLVITCF
1J770-6-6-SM	OSPP400000101600000G06000	CCS012A	T15ZLVITSSACF
1J770-6-8-SM	OSPP400000101600000G06000	CCS012AD	T16S71
1J770-8-6-SM	OSPP40000101850000000000	CCS012D	T16S71X
1J770-8-8-SM	OSPP40000101850000000000	CCS012L	T16SCF
1J771-12-12-SM	OSPP400000102150000G06000	CCS012LD	T16SCFX
1J771-16-12-SM	OSPP400000102150000G06000	CCS012S	T16SMFBLSS
1J771-16-16-SM	OSPP40000102852000000000	CCS018D	T16SMS
1J771-8-8-SM	OSPP40000102852000000000	CCS024A	T16ZS71
1J773-12-12-SM	OSPP40000100150000000000	CCS024AD	T16ZSCF
1J773-16-12-SM	OSPP40000100150000000000	CCS024AV	T16ZSVITCF
1J773-16-16-SM	OSPP40000100150000400000	CCS024D	T18L71
1J773-20-16-SM	OSPP40000100150000400000	CCS024H	T18L71X
1J777-12-12	OSPP400001000315000G00000	CCS024L	T18LCF
1J777-16-16	OSPP400001000315000G00000	CCS048D	T18LCFX
1J777-8-8	OSPP40000100350000100000	CCS115D	T18LDPR71CF
1J778-12-12-SM	OSPP40000100350000100000	CCS115M	T18LDPR71MS
1J778-16-16-SM	OSPP40000100350000300000	CCS230C	T18LMS
1J778-20-20	OSPP40000100350000300000	CCS230D	T18LSPH71
1J779-16-16-SM	OSPP400001000350000D00000	CCS240D	T18ZL71
1J779-20-20	OSPP400001000350000D00000	CCV12000-08L	T18ZLCF
1J791N-8-8	OSPP40000100400000600000	CCV1500-04	T18ZLVITCF
1J926-6-6-SM	OSPP40000100400000600000	CCV40100	T20025D2F02
1J943-10-10C-SM	OSPP40000100400001000000	CCV4500-08L	T20025D2F02
1J943-10-10-SM	OSPP40000100400001000000	CCV4500-08R	T20S71
1J943-10-8-SM	OSPP40000100450000000000	CCV55012	T20S71X
1J943-12-10-SM	OSPP40000100450000000000	CCV55020	T20SCF

1J943-12-12C-SM	OSPP40000100050000000000	CCV55022	T20SCFX
1J943-12-12-SM	OSPP40000100050000000000	CCV55024	T20SMS
1J943-16-16-SM	OSPP40000100050000200000	CCV55025	T20SMSX
1J943-6-6-SM	OSPP40000100050000200000	CCV55037	T20SSTOSSORCF
1J943-8-6-SM	OSPP400001000500000H00000	CCV55038	T20ZS71
1J943-8-8C-SM	OSPP400001000500000H00000	CCV55040	T20ZSCF
1J943-8-8-SM	OSPP40000100050000500000	CCV55041	T20ZSVITCF
1J946-10-10	OSPP40000100050000500000	CCV55046	T2112501H
1J946-10-12	OSPP40000100055000010000	CCV55047	T2112501H
1J946-10-8	OSPP40000100055000010000	CCV55049	T2112522H
1J946-12-10	OSPP40000100060000000000	CCV55069	T2112522H
1J946-12-12	OSPP40000100060000000000	CCV55080	T22L71
1J946-12-16	OSPP40000100080000500000	CCV55081	T22L71X
1J946-12-8	OSPP40000100080000500000	CCV55114	T22LCF
1J946-16-12	OSPP40000100090000000000	CCV55218	T22LCFX
1J946-16-16	OSPP40000100090000000000	CCV55220R	T22LDPR71CF
1J946-20-16	OSPP40000100100000000000	CCV55221	T22LMS
1J946-20-20	OSPP40000100100000000000	CCV55222-08	T22LMSX
1J946-4-4	OSPP40000100105000000000	CCV55222-10	T22ZL71
1J946-4-6	OSPP40000100105000000000	CCV55222-12-08	T22ZLCF
1J946-6-4	OSPP40000110007000060500 0	CCV55222-12-10	T22ZLSSACF
1J946-6-5	OSPP40000110007000060500 0	CCV55247	T22ZLVITCF
1J946-6-6	OSPP40000110076000000000	CCV55248-08	T23HFB10-1/4
1J946-6-8	OSPP40000110076000000000	CCV55248-10	T23HFB10-3/8
1J946-8-4	OSPP40000400035000040400 0	CCV55250	T23HFB12-1/2
1J946-8-6	OSPP40000400035000040400 0	CCV55251	T23HFB12-3/8
1J946-8-8	OSPP40000400050000020400 0	CCV55267	T23HFB14-1/2
1J948-10-10	OSPP40000400050000020400 0	CCV55268	T23HFB16-1/2
1J948-10-12	OSPP40000400050000060400 0	CCV55273	T23HFB18-1/2
1J948-10-8	OSPP40000400050000060400 0	CCV55274-08	T23HFB20-3/4
1J948-12-10	OSPP40000400055000040400 0	CCV55274-10	T23HFB22-3/4
1J948-12-12	OSPP40000400055000040400 0	CCV55275	T23HFB8-1/4
1J948-12-8	OSPP40000400060000100400 0	CCV55279	T23HFB8-1/8
1J948-16-12	OSPP40000400060000100400 0	CCV55280	T23UB10
1J948-16-16	OSPP40000400080000000000	CCV55304-08	T23UB12
1J948-20-16	OSPP40000400080000000000	CCV55374	T23UB4
1J948-20-20	OSPP400004000800001A04000	CCV55385	T23UB6
1J948-24-24	OSPP400004000800001A04000	CCV55390	T23UB8
1J948-4-4	OSPP40000400100000004000	CCV6000-08L	T24FPK10-1/4
1J948-4-6	OSPP40000400100000004000	CCV6000-08R	T24FPK4-1/8
1J948-6-4	OSPP40000400110000004000	CCV6001-08L	T24FPK6-1/4
1J948-6-5	OSPP40000400110000004000	CCV6001-08R	T24FPK6-1/8
1J948-6-6	OSPP40000400119000000000	CCV60125	T24FPK8-1/4
1J948-6-8	OSPP40000400119000000000	CCV8000-08L	T24FPK8-1/8
1J948-8-4	OSPP40000400120000000000	CCV8000-08R	T24FPK8-3/8
1J948-8-6	OSPP40000400120000000000	CCV8001-08L	T24HGB12-1/2
1J948-8-8	OSPP40000400120000004000	CCV8001-08R	T24HGB12-3/8
1J954-4-4-SM	OSPP40000400120000004000	CD10	T24HGB16-1/2
1J955-4-4	OSPP40001000010010000000	CD13	T24HGB6-1/8
1J955-6-4	OSPP40001000010010000000	CD14M	T24HGB8-1/4
1J955-6-5	OSPP40001000030000000000	CD17	T25S71
1J955-6-6	OSPP40001000030000000000	CD1UA1F1R0003	T25S71X
1J955-8-8	OSPP400010000400000G00000	CD1UA1F1R0004	T25SCF

1J956-6-4	OSPP400010000400000G00000	CD1UA1F1R0005	T25SCFX
1J956-6-6	OSPP40001000450000000000	CD1UA1F1R0006	T25SDPR71MS
1J958-10-8-SM	OSPP40001000450000000000	CD1UA1F1R0008	T25SMS
1J958-12-12	OSPP400010000570000G00000	CD1UA1F1R0009	T25ZS71
1J958-8-6-SM	OSPP400010000570000G00000	CD1UA1F1R0010	T25ZSCF
1J970-10-10-SM	OSPP40001000700000000000	CD1UA1F1R0013	T25ZSVITCF
1J970-10-8-SM	OSPP40001000700000000000	CD1UA1F1R0015	T28L71
1J970-12-10-SM	OSPP40001000720000600000	CD1UA1F1R0020	T28L71X
1J970-12-12-SM	OSPP40001000720000600000	CD1UA1F1R0025	T28LCF
1J970-12-8-SM	OSPP40001000720000601000	CD1UA1F1R0030	T28LCFX
1J970-16-12	OSPP40001000720000601000	CD1UA1F1R0035	T28LDPR71CF
1J970-16-16-SM	OSPP40001000770000000000	CD1UP1F1R0003	T28LMS
1J970-6-6-SM	OSPP40001000770000000000	CD1UP1F1R0005	T28LMSX
1J970-8-6-SM	OSPP40001000800000000000	CD1UP1F1R0015	T28ZL71
1J970-8-8-SM	OSPP40001000800000000000	CD1UQ1F1R0003	T28ZLCF
1J971-10-10-SM	OSPP40001000081000000F000	CD1UQ1F1R0004	T28ZLSSACF
1J971-12-12-SM	OSPP40001000081000000F000	CD1UQ1F1R0005	T28ZLVITCF
1J971-16-16-SM	OSPP40001000900010000000	CD1UQ1F1R0006	T2ESPK4
1J971-20-20-SM	OSPP40001000900010000000	CD1UQ1F1R0008	T2ESPK4-6
1J971-6-6	OSPP40001001000000000000	CD1UQ1F1R0009	T2ESPK6
1J971-8-8-SM	OSPP40001001000000000000	CD1UQ1F1R0010	T2ESPK8
1J973-12-12-SM	OSPP40001001000100000000	CD1UQ1F1R0015	T2ESPMK4
1J973-16-12-SM	OSPP40001001000100000000	CD1UQ1F1R0020	T2ESPMK4-6
1J973-16-16-SM	OSPP40001001175005000000	CD1UQ1F1R0030	T2ESPMK6
1J973-20-16-SM	OSPP40001001175005000000	CD21	T2HF 10-1/2-SS
1J977-12-12	OSPP40001001200001000000	CE016C01A00N	T2HF 10-1/4K-SS
1J977-16-12	OSPP40001001200001000000	CE016C01A99N	T2HF 10-1/4R-SS
1J977-16-16	OSPP40001001625000000000	CE016C01L00N	T2HF 10-1/4-SS
1J977-8-8	OSPP40001001625000000000	CE016C01L00V	T2HF 10-3/8-SS
1J978-12-12-SM	OSPP40001001800004000000	CE016C01L08N	T2HF 12-1/2R-SS
1J978-16-12-SM	OSPP40001001800004000000	CE016C01L99N	T2HF 12-1/2-SS
1J978-16-16-SM	OSPP40001002000000000000	CE016C01N00N	T2HF 12-1/4R-SS
1J978-20-20-SM	OSPP40001002000000000000	CE016C01N09N	T2HF 12-1/4-SS
1J979-16-16	OSPP40001002500000000000	CE016C01N11N	T2HF 12-3/8R-SS
1J991N-8-8	OSPP40001002500000000000	CE016C01N11V	T2HF 12-3/8-SS
1J9PX-4-04	OSPP40001003560000000000	CE016C01N99N	T2HF 16-1/2-SS
1J9PX-6-06	OSPP40001003560000000000	CE016C01S00N	T2HF 3-1/8R-SS
1J9PX-8-08	OSPP40001003860000000000	CE016C01S00V	T2HF 6-1/4K-SS
1JC26-10-10-SM	OSPP40001003860000000000	CE016C01S08N	T2HF 6-1/4R-SS
1JC26-12-12-SM	OSPP40001200007000060500 0	CE016C01S09N	T2HF 6-1/4-SS
1JC26-16-16-SM	OSPP40001200007000060500 0	CE016C01S09V	T2HF 6-1/8K-SS
1JC26-6-6-SM	OSPP400012000150020B00000	CE016C01S10N	T2HF 6-1/8R-SS
1JC26-8-6-SM	OSPP400012000150020B00000	CE016C01S12N	T2HF 6-1/8-SS
1JC26-8-8-SM	OSPP400012001000000B00000	CE016C01S13N	T2HF 8-1/4-SS
1JC43-10-10-SM	OSPP400012001000000B00000	CE016C01S99N	T2HF 8-3/8-SS
1JC43-10-8-SM	OSPP40001210010000 4000000	CE016C01S99V	T2HFB10-1/4
1JC43-12-12-SM	OSPP40001210010000 4000000	CE016C01T00N	T2HFB6-1/4
1JC43-16-12-SM	OSPP40010000250005000000	CE016C01U00N	T2HFB6-1/8
1JC43-16-16-SM	OSPP40010000250005000000	CE016C01U00V	T2HFB8-1/4
1JC43-20-16C-SM	OSPP40010000345000800000	CE016C01U08N	T2HG 10-1/2-SS
1JC43-20-20C-SM	OSPP40010000345000800000	CE016C01U08V	T2HG 10-1/4K-SS
1JC43-6-6C-SM	OSPP40010000465000800000	CE016C01U09N	T2HG 10-1/4-SS
1JC43-6-6-SM	OSPP40010000465000800000	CE016C01U11N	T2HG 10-3/8-SS

1JC43-8-8-SM	OSPP40010000700000600000	CE016C01U12N	T2HG 12-1/2-SS
1JC46-10-10	OSPP40010000700000600000	CE016C01U13N	T2HG 12-1/4-SS
1JC46-10-12	OSPP40010000730000000000	CE016C04A00N	T2HG 6-1/4R-SS
1JC46-10-8	OSPP40010000730000000000	CE016C04L00N	T2HG 6-1/4-SS
1JC46-12-10	OSPP40010000820000000000	CE016C04L00V	T2HG 6-1/8K-SS
1JC46-12-12	OSPP40010000820000000000	CE016C04N00N	T2HG 6-1/8R-SS
1JC46-12-8	OSPP40010000820001000000	CE016C04N00V	T2HG 8-1/4-SS
1JC46-16-12	OSPP40010000820001000000	CE016C04N08N	T2HGB6-1/4
1JC46-16-16	OSPP40010000900000600000	CE016C04N99V	T2HGB8-1/4
1JC46-20-16	OSPP40010000900000600000	CE016C04S00N	T2JPK4
1JC46-20-20	OSPP40010000104500080000	CE016C04S00V	T30S71
1JC46-4-4	OSPP40010000104500080000	CE016C04S08N	T30S71X
1JC46-4-6	OSPP40010000120000000000	CE016C04S10N	T30SCF
1JC46-6-4	OSPP40010000120000000000	CE016C04S12N	T30SCFX
1JC46-6-5	OSPP40010000128500400000	CE016C04S99N	T30SMS
1JC46-6-6	OSPP40010000128500400000	CE016C04T00N	T30SMSX
1JC46-6-8	OSPP40010000180000000000	CE016C04U00N	T30ZS71
1JC46-8-10	OSPP40010000180000000000	CE016C04U00N	T30ZSCF
1JC46-8-4	OSPP40010000185000000000	CE016C04U08N	T30ZSNBR71
1JC46-8-6	OSPP40010000185000000000	CE016C07N00N	T30ZSVITCF
1JC46-8-8	OSPP40010000200000000000	CE016C07N99N	T35L71
1JC48-10-10	OSPP40010000200000000000	CE016C07S00N	T35L71X
1JC48-10-12	OSPP40010000240000000000	CE016C07S08N	T35LCF
1JC48-10-8	OSPP40010000240000000000	CE016C07S09N	T35LCFX
1JC48-12-10	OSPP40010000265000000000	CE016C07S99N	T35LDPR71CF
1JC48-12-12	OSPP40010000265000000000	CE016C07T00N	T35LMS
1JC48-12-16	OSPP40010000273000000000	CE016C07U00N	T35LMSX
1JC48-12-8	OSPP40010000273000000000	CE016C08A00N	T35ZL71
1JC48-16-12	OSPP40010010040000000000	CE016C08L00N	T35ZLCF
1JC48-16-16	OSPP40010010040000000000	CE016C08L00V	T35ZLVITCF
1JC48-20-16	OSPP40010010040000020000	CE016C08N00N	T38S
1JC48-20-20	OSPP40010010040000020000	CE016C08N08N	T38S71
1JC48-24-24	OSPP40010010080000000000	CE016C08N08N	T38S71X
1JC48-4-4	OSPP40010010080000000000	CE016C08S00N	T38SCF
1JC48-4-6	OSPP40010100100000000000	CE016C08S00N	T38SCFX
1JC48-6-4	OSPP40010100100000000000	CE016C08S00V	T38SMS
1JC48-6-5	OSPP40011000160000000000	CE016C08S08N	T38ZS71
1JC48-6-6	OSPP40011000160000000000	CE016C08S09N	T38ZSCF
1JC48-6-8	OSPP400200000250040D00000	CE016C08S10N	T3B050NP00850DLQ
1JC48-8-10	OSPP400200000250040D00000	CE016C08S11N	T3B050NP01250DLA
1JC48-8-4	OSPP400200000300000H00000	CE016C08S12N	T3B050NP01700DLA
1JC48-8-6	OSPP400200000300000H00000	CE016C08S14N	T3B050NP01700DRA
1JC48-8-8	OSPP40020000310000000000	CE016C08S99N	T3B080NP01500DLB
1JC54-4-4-SM	OSPP40020000310000000000	CE016C08T00N	T3CP-1HE-04-1SNB
1JC55-10-8	OSPP40020000350000800000	CE016C08U00N	T3CP-1HE-04-2SEB
1JC55-4-3	OSPP40020000350000800000	CE016C08U08N	T3CP-1HE-06-1SNB
1JC55-4-4	OSPP40020000400000000000	CE016C08U99N	T3EP-1ST-05-3FFP
1JC55-6-4	OSPP40020000400000000000	CE016F01L00N	T3EP-1ST-08-1SNB
1JC55-6-5	OSPP400200000400000F000	CE016F04L00N	T3HP-1PD-12-1SNP
1JC55-6-6	OSPP400200000400000F000	CE016F04L00V	T4-2HE-06-1SNA
1JC55-6-6-SM	OSPP40020000500000000000	CE016F08L00V	T42L
1JC55-8-6-SM	OSPP40020000500000000000	CE016S04S00N	T42L71
1JC55-8-8	OSPP40020000580000000000	CE016S04S99V	T42L71X

1JC56-4-3	OSPP40020000580000000000	CE016S04U00N	T42LCF
1JC56-4-4	OSPP40020000058000000F000	CE016S07S99N	T42LCFX
1JC56-6-4	OSPP40020000058000000F000	CE016S07U00N	T42LDPR71CF
1JC56-6-5	OSPP40020000600000000000	CE016S08S00N	T42LMS
1JC56-6-6	OSPP40020000600000000000	CE016S08S00V	T42LMSX
1JC56-8-6	OSPP400200000600000G00000	CE016S08U00N	T42ZL71
1JC56-8-8	OSPP400200000600000G00000	CE025B01N00N	T42ZLCF
1JC58-10-8-SM	OSPP40020000650000000000	CE025B01N11N	T42ZLVITCF
1JC58-8-6-SM	OSPP40020000650000000000	CE025B01S11N	T4C2B3R0029
1JC58-8-8-SM	OSPP40020000705000000000	CE025B04N00N	T4C3C3R0005
1JC70-10-10-SM	OSPP40020000705000000000	CE025B07S00N	T4F2B2R0030
1JC70-10-8-SM	OSPP40020000740000000000	CE025B07S09NX480	T4F2BR0005
1JC70-12-10-SM	OSPP40020000740000000000	CE025B08N08N	T4F2BR1018
1JC70-12-12-SM	OSPP400200000750000H00000	CE025B08S00N	T4F3BR0005
1JC70-12-16-SM	OSPP400200000750000H00000	CE025C01A00N	T4F3CR1011
1JC70-12-8-SM	OSPP40020000850000000000	CE025C01A11N	T4F4BR0005
1JC70-16-12-SM	OSPP40020000850000000000	CE025C01L00N	T4F4BR1028
1JC70-16-16-SM	OSPP40020000890000000000	CE025C01L00V	T5-1HE-03-1EEB
1JC70-6-6-SM	OSPP40020000890000000000	CE025C01L10N	T5-1LI-03-1EEB
1JC70-8-10-SM	OSPP40020000900000600000	CE025C01L11N	T53006
1JC70-8-6-SM	OSPP40020000900000600000	CE025C01L99N	T53006
1JC70-8-8C-SM	OSPP40020000950000000000	CE025C01N00N	T5F3BR0004
1JC70-8-8-SM	OSPP40020000950000000000	CE025C01N00V	T5F3E4R0507
1JC71-12-12-SM	OSPP40020001000000000000	CE025C01N08N	T5F4BR0004
1JC71-16-16-SM	OSPP40020001000000000000	CE025C01N10N	T63006A
1JC71-20-20-SM	OSPP40020001050000000000	CE025C01N11N	T63006A
1JC73-12-12-SM	OSPP40020001050000000000	CE025C01N12N	T6F3CR0004
1JC73-16-16-SM	OSPP40020001075000000000	CE025C01N99N	T6F3CR1215
1JC73-20-20-SM	OSPP40020001075000000000	CE025C01S00N	T6F4B3R0004
1JC73-24-24-SM	OSPP40020001150000000000	CE025C01S00N	T6F4BR0004
1JC77-10-10	OSPP40020001150000000000	CE025C01S00V	T6F4C3R0028
1JC77-12-12	OSPP40020001190000000000	CE025C01S08N	T890973
1JC77-12-16	OSPP40020001190000000000	CE025C01S08V	T890973--
1JC77-12-8	OSPP40020001250000000000	CE025C01S09N	T890973-/
1JC77-16-12	OSPP40020001250000000000	CE025C01S09NX705	T890973-+
1JC77-16-16	OSPP40020001300000000000	CE025C01S10N	T890973-0
1JC77-20-16	OSPP40020001300000000000	CE025C01S11N	T890973-1
1JC77-8-8	OSPP40020001350000000000	CE025C01S11V	T890973-2
1JC91N-8-8	OSPP40020001350000000000	CE025C01S12N	T890973-3
1JCEX-4-012	OSPP40020001400000000000	CE025C01S18N	T890973-4
1JCEX-6-012	OSPP40020001400000000000	CE025C01S22N	T890973-5
1JCPX-4-04	OSPP40020001450000000000	CE025C01S99N	T890973-6
1JCPX-6-06	OSPP40020001450000000000	CE025C01S99V	T890973-7
1JCPX-8-06	OSPP40020001500000000000	CE025C01T00N	T890973-8
1JCPX-8-08	OSPP40020001500000000000	CE025C01T12N	T890973-A
1JD46-10-10	OSPP40020001550000000000	CE025C01U00N	T890973-B
1JD46-12-12	OSPP40020001550000000000	CE025C01U08N	T890973-C
1JD46-4-4	OSPP40020001650000000000	CE025C01U08V	T890973-D
1JD46-6-6	OSPP40020001650000000000	CE025C01U10N	T890973-E
1JD46-8-8	OSPP40020001690000000000	CE025C01U11N	T890973-F
1JD48-10-10	OSPP40020001690000000000	CE025C01U12N	T890973-G
1JD48-12-12	OSPP40020001800000000000	CE025C01U13N	T890973-H
1JD48-4-4	OSPP40020001800000000000	CE025C01U99N	T890973-I

1JD48-6-6	OSPP40020000185000000000	CE025C04L00N	T890973-J
1JD48-8-8	OSPP40020000185000000000	CE025C04L00V	T890973-K
1JM43-10-10-SM	OSPP40020000205000000000	CE025C04L08N	T890973-L
1JM43-10-8-SM	OSPP40020000205000000000	CE025C04N00N	T890973-M
1JM43-16-16-SM	OSPP40020000210000000000	CE025C04N08N	T890973-N
1JM43-8-6-SM	OSPP40020000210000000000	CE025C04N10N	T890973-O
1JM43-8-8-SM	OSPP40020000215000000000	CE025C04S00N	T890973-P
1JM46-10-10	OSPP40020000215000000000	CE025C04S00V	T890973-Q
1JM46-10-8	OSPP40020000220000020000	CE025C04S00V	T890973-R
1JM46-12-10	OSPP40020000220000020000	CE025C04S08N	T890973-S
1JM46-12-12	OSPP40020000220000060000	CE025C04S10N	T890973-T
1JM46-16-12	OSPP40020000220000060000	CE025C04S15N	T890973-U
1JM46-16-16	OSPP40020000229000000000	CE025C04S20N	T890973-V
1JM46-20-16	OSPP40020000229000000000	CE025C04S99N	T890973-W
1JM46-20-20	OSPP40020000230000000000	CE025C04T00N	T890973-X
1JM46-4-4	OSPP40020000230000000000	CE025C04U00N	T890973-Y
1JM46-6-4	OSPP40020000250000000000	CE025C04U00V	T890973-Z
1JM46-6-5	OSPP40020000250000000000	CE025C04U08N	T891179
1JM46-6-6	OSPP40020000250000100000	CE025C07L00N	T891180
1JM46-8-6	OSPP40020000250000100000	CE025C07N00N	T905871
1JM46-8-8	OSPP40020000259300020000	CE025C07N00V	TA03 L8 04
1JM48-10-10	OSPP40020000259300020000	CE025C07N20N	TA06 L8 04
1JM48-10-8	OSPP40020000310000000000	CE025C07N99N	TA06 L8 06
1JM48-12-10	OSPP40020000310000000000	CE025C07S00N	TA10
1JM48-12-12	OSPP40020000350000000000	CE025C07S00V	TA100
1JM48-16-12	OSPP40020000350000000000	CE025C07S09N	TA10N
1JM48-16-16	OSPP40020000350000020000	CE025C07S09NX480	TA13
1JM48-20-16	OSPP40020000350000020000	CE025C07S11N	TA13N
1JM48-20-20	OSPP40020000350000800000	CE025C07S11V	TA17
1JM48-4-4	OSPP40020000350000800000	CE025C07S99N	TA17N
1JM48-6-4	OSPP40020010124000000000	CE025C07T00N	TA21
1JM48-6-5	OSPP40020010124000000000	CE025C07U00N	TA38
1JM48-6-6	OSPP40020010125000000000	CE025C07U08N	TA38
1JM48-8-6	OSPP40020010125000000000	CE025C08A00N	TA50
1JM48-8-8	OSPP40020100040000000000	CE025C08A00V	TA50
1JM70-10-10-SM	OSPP40020100040000000000	CE025C08A10N	TA50IW
1JM70-10-8-SM	OSPP40020100060000H00000	CE025C08L00N	TA50IW
1JM70-12-10-SM	OSPP40020100060000H00000	CE025C08S11N	TA75
1JM70-12-12-SM	OSPP40020100093000000000	CE025C08S12V	TA75
1JM70-16-12-SM	OSPP40020100093000000000	CE025C08S15N	TAM4/003S003
1JM70-16-16-SM	OSPP40020100105000100000	CE025C08S99N	TAM4/003S003
1JM70-6-6-SM	OSPP40020100105000100000	CE025C08T00N	TAM4-030LG005-X
1JM70-8-6-SM	OSPP40020100120000100000	CE025C08U00N	TAM4-030LG005-X
1JM70-8-8-SM	OSPP40020100120000100000	CE025C08U08N	TAPE-FV
1JM73-16-16-SM	OSPP40020100125000020000	CE025C08U11N	TB0045FS210AAAC
1JM73-20-16-SM	OSPP40020100125000020000	CE025C10S00N	TB0050AS100LAAY
1JM73-20-20-SM	OSPP40020110050000000000	CE025F04L00N	TB00657M650AAAB
1JM77-10-10	OSPP40020110050000000000	CE025F07L00N	TB0080AM100LAAY
1JM77-12-12	OSPP40020110055000040000	CE025F08L00N	TB0080AS100LAAY
1JM77-12-8	OSPP40020110055000040000	CE025S04S00N	TB0100AM100LAAY
1JM77-16-12	OSPP40021000065000000000	CE025S04S00V	TB0130AM100AAAA
1JM77-16-16	OSPP40021000065000000000	CE025S04S08N	TB0130AM100LAAY
1JM77-20-16	OSPP40021000075000000000	CE025S04S99N	TB0130AS110AAAA

1JM77-8-8	OSPP40021000750000000000	CE025S04S99V	TB0165MS260AAAA
1JM78-24-20-SM	OSPP400210000750000H00000	CE025S04U00N	TB0295AP100AAAB
1JS43-10-10-SM	OSPP400210000750000H00000	CE025S04U00V	TB312CFX
1JS46-10-10	OSPP400210000775000H00000	CE025S07S00N	TB316CFX
1JS46-10-8	OSPP400210000775000H00000	CE025S07S00V	TB320CFX
1JS46-12-10	OSPP400210000775000H0F000	CE025S07S09N	TB324CFX
1JS46-12-12	OSPP400210000775000H0F000	CE025S07S09NX480	TB324SSX
1JS46-16-12	OSPP40021000800000000000	CE025S07S11N	TB332CFX
1JS46-16-16	OSPP40021000800000000000	CE025S07U00N	TB332SSX
1JS46-20-20	OSPP40021200076000000000	CE025S07U08N	TB340CFX
1JS46-4-4	OSPP40021200076000000000	CE025S07U11N	TB348CFX
1JS46-6-4	OSPP400212000760000G00000	CE025S08S00N	TB364CFX
1JS46-6-5	OSPP400212000760000G00000	CE025S08S08N	TB380CFX
1JS46-6-6	OSPP40030000112900000000	CE025S08U00N	TB432CFX
1JS46-6-8	OSPP40030000112900000000	CE025S08U00V	TB440CFX
1JS46-8-6	OSPP40050000065600000000	CE025S10S00N	TB448CFX
1JS46-8-8	OSPP40050000065600000000	CE032B07U00NX425	TB464CFX
1JS48-10-10	OSPP40050000136000000000	CE032C01L00N	TB616CFX
1JS48-10-12	OSPP40050000136000000000	CE032C01L00V	TB616SSX
1JS48-10-8	OSPP40050000147000000000	CE032C01L11N	TB620CFX
1JS48-12-10	OSPP40050000147000000000	CE032C01L14V	TB624CFX
1JS48-12-12	OSPP40050000154000400000	CE032C01L99N	TB624SSX
1JS48-16-12	OSPP40050000154000400000	CE032C01N00N	TB632CFX
1JS48-16-16	OSPP40050000167000000000	CE032C01N00V	TB632SSX
1JS48-20-20	OSPP40050000167000000000	CE032C01N12N	TB880SX
1JS48-24-24	OSPP40050000175010400000	CE032C01N13N	TBF120/12TS
1JS48-4-4	OSPP40050000175010400000	CE032C01N99N	TBF120/7TS
1JS48-4-6	OSPP40050000180000000000	CE032C01S00N	TBF60/5I
1JS48-6-4	OSPP40050000180000000000	CE032C01S00V	TBF60/5R
1JS48-6-5	OSPP40050000207000000000	CE032C01S08N	TBF60/5R-T090
1JS48-6-6	OSPP40050000207000000000	CE032C01S11N	TBR100101CFX
1JS48-6-8	OSPP40050000270000000000	CE032C01S12N	TBR320-316-320CFX
1JS48-8-10	OSPP40050000270000000000	CE032C01S12N	TBR324-316-324CFX
1JS48-8-6	OSPP40050000350000000000	CE032C01S12NX480	TBR324-316-324SSX
1JS48-8-8	OSPP40050000350000000000	CE032C01S12V	TBR324-320-324CFX
1JS55-6-5	OSPP40051000160000000000	CE032C01S13N	TBR332-320-332CFX
1JS55-6-6	OSPP40051000160000000000	CE032C01T00N	TBR332-320-332SSX
1JS55-8-8	OSPP40051000324000000000	CE032C01T12N	TBR332-324-332CFX
1JS58-12-12	OSPP40051000324000000000	CE032C01U00V	TBR340-320-340CFX
1JS70-10-10-SM	OSPP40051000342000000000	CE032C01U08N	TBR340-332-340CFX
1JS70-10-8-SM	OSPP40051000342000000000	CE032C01U08V	TBR348-332-332CFX
1JS70-12-10-SM	OSPP400810001222000G00000	CE032C01U12N	TBR348-332-348CFX
1JS70-12-12-SM	OSPP400810001222000G00000	CE032C01U13N	TBR440-432-440CFX
1JS70-16-12-SM	OSPP400810001222010G00000	CE032C01U14N	TBR620-616-620CFX
1JS70-16-16-SM	OSPP400810001222010G00000	CE032C01U99N	TBR624-616-624CFX
1JS70-6-6-SM	OSPP400810001270010G00000	CE032C04L00N	TBR624-616-624SSX
1JS70-8-6-SM	OSPP400810001270010G00000	CE032C04L00V	TBR624-620-624CFX
1JS70-8-8-SM	OSPP400810001523010G00000	CE032C04L08N	TBR632-620-632CFX
1JS71-10-8	OSPP400810001523010G00000	CE032C04N00N	TBR632-624-632CFX
1JS71-12-12-SM	OSPP400810001622000G00000	CE032C04N00V	TBS120/2.5S-01
1JS71-16-12-SM	OSPP400810001622000G00000	CE032C04N99N	TBS120/3S-01
1JS71-16-16-SM	OSPP400810001622010G00000	CE032C04S00N	TBS200/10X1
1JS71-20-20-SM	OSPP400810001622010G00000	CE032C04S00N	TBS200/15Y1

1JS71-6-6	OSPP400810001726010G00000	CE032C04S12N	TBS200/15Y2
1JS71-8-8-SM	OSPP400810001726010G00000	CE032C04T00N	TBS200/3Z1
1JS73-12-12-SM	OSPP400810001930000G00000	CE032C04U00N	TBS250/10X1
1JS73-16-12-SM	OSPP400810001930000G00000	CE032C04U00V	TBS250/20Y1
1JS73-16-16-SM	OSPP400810001930010G00000	CE032C04U99N	TBT16-1/4CFX
1JS73-20-16-SM	OSPP400810001930010G00000	CE032C07N00N	TBT20-1/2CFX
1JS73-20-20-SM	OSPP400810001981000G00000	CE032C07N00NXG019	TBT20-1/4CFX
1JS73-24-20-SM	OSPP400810001981000G00000	CE032C07N99N	TBT24-1/2CFX
1JS73-24-24-SM	OSPP400810002050000G00000	CE032C07S00N	TBT24-1/4CFX
1JS78-12-12-SM	OSPP400810002050000G00000	CE032C07S09N	TBT32-1/2CFX
1JS78-16-12-SM	OSPP400810002750000H00000	CE032C07S11N	TBT32-1/4CFX
1JS78-16-16-SM	OSPP400810002750000H00000	CE032C07S12NXG019	TBT40-1/4CFX
1JS78-20-16-SM	OSPP400A00000080005000000	CE032C07S99N	TBT48-1/4CFX
1JS78-20-20-SM	OSPP400A00000080005000000	CE032C07T00N	TC-01 KEY
1JS78-24-20-SM	OSPP400A00000340000000000	CE032C07T00V	TC-02 KEY
1JS78-24-24-SM	OSPP400A00000340000000000	CE032C07U00N	TC1124
1JS79-16-16-SM	OSPP400A00000400000600000	CE032C07U12N	TC1125
1K771-24-24	OSPP400A00000400000600000	CE032C08L00N	TC1130
1K971-16-16	OSPP400A00000420005000000	CE032C08L08N	TC13125
1K971-20-20	OSPP400A00000420005000000	CE032C08N00N	TC13250
1KSQDT150P08500	OSPP400A00000500000000000	CE032C08N00V	TC13500
1KSQDT150P08500	OSPP400A00000500000000000	CE032C08N10N	TC9125
1KSQDX100P23000	OSPP400A00000500004000000	CE032C08N99N	TC9250
1KSQDX100P23000	OSPP400A00000500004000000	CE032C08S00N	TC9500
1L4NMS	OSPP400A00000500200000000	CE032C08S00V	TCJ4
1L4NMSS	OSPP400A00000500200000000	CE032C08S10N	TCJ6
1L948-12-12	OSPP400A00000515005000000	CE032C08S11N	TCJ9
1L948-16-16	OSPP400A00000515005000000	CE032C08S12N	TCK4
1L948-8-6	OSPP400A00000540000000000	CE032C08S99N	TCK6
1M2SC2-316	OSPP400A00000540000000000	CE032C08T00N	TCK9
1MB8X-6-04	OSPP400A00000575005000000	CE032C08U00N	TCP4X0.65/2-50
1MBC2N-316	OSPP400A00000575005000000	CE032C08U10N	TCP4X0.65/3-50
1MMO444BL	OSPP400A00000620000000000	CE032C10S00N	TCP4X0.65/5-50
1MMO444MS	OSPP400A00000620000000000	CE032F01L00N	TCP4X1/2-50
1MMS443BL	OSPP400A00000630000G00000	CE032F04L00N	TCP4X1/3-50
1MRO434BL	OSPP400A00000630000G00000	CE032F08L00V	TCP4X1/5-50
1MRS433BL	OSPP400A00000650001000000	CE032S04S00N	TCP6X1/2-50
1MSC1N-316	OSPP400A00000650001000000	CE032S04S00V	TCP6X1/3-50
1MSC2N-316	OSPP400A00000715005000000	CE032S04T00N	TCP6X1/5-50
1MSC2N-B	OSPP400A00000715005000000	CE032S04U00N	TCP8X1/2-50
1MSC2R-316	OSPP400A00000770005000000	CE032S04U00V	TCP8X1/3-50
1MSC4N-316	OSPP400A00000770005000000	CE032S07S00N	TCP8X1/5-50
1MSEL1N-316	OSPP400A00000800000000000	CE032S07S00V	TD001-13
1MSEL2N-316	OSPP400A00000800000000000	CE032S07S08N	TD002-13
1MSEL4N-316	OSPP400A00000800000200000	CE032S07S12N	TD004-13
1MTC1N-316	OSPP400A00000800000200000	CE032S07T00N	TDA016EW06B2NLW
1MTC2N-316	OSPP400A00000800005000000	CE032S07T12N	TDA016EW06B2NXW
1MTC2R-316	OSPP400A00000800005000000	CE032S07U00N	TDA016EW06B2VXW
1MTC2R-EDV-316	OSPP400A00000870005000000	CE032S07U12N	TDA016EW09A2NLW
1MTC4N-316	OSPP400A00000870005000000	CE032S08S00N	TDA016EW09A2NXW
1MTCM8X1-316	OSPP400A00000900000000000	CE032S08S00N	TDA016EW09B2NLW
1MU46-4-4	OSPP400A00000900000000000	CE032S08S00NXG019	TDA016EW09B2NXW
1MU46-6-6	OSPP400A00001000004000000	CE032S08S00V	TDA016EW09B2VXW

1MU46-8-8	OSPP400A00001000004000000	CE032S08S12N	TDA016EW29B2NXW
1MU48-4-4	OSPP400A00001060005000000	CE032S08S99N	TDA016EW49B2NXW
1MU48-6-4	OSPP400A00001060005000000	CE032S08U00N	TDA025EW06A2NXW
1MU48-6-6	OSPP400A00001129000000000	CE032S08U00V	TDA025EW06B2NLW
1MU48-8-8	OSPP400A00001129000000000	CE032S08U08V	TDA025EW06B2NXW
1MU70-8-8	OSPP400A00001150000000000	CE032S10S00N	TDA025EW06B2VLW
1MU71-8-8	OSPP400A00001150000000000	CE040C01L00N	TDA025EW09A2NLW
1MZ46-4-4	OSPP400A00001150001000000	CE040C01L00V	TDA025EW09A2NXW
1MZ46-6-6	OSPP400A00001150001000000	CE040C01N00N	TDA025EW09A2VXW
1MZ46-8-8	OSPP400A00001150005000000	CE040C01N00V	TDA025EW09B2NLW
1MZ48-4-4	OSPP400A00001150005000000	CE040C01N11N	TDA025EW09B2NXW
1MZ48-6-6	OSPP400A00001200003000000	CE040C01N12N	TDA025EW09B2VLW
1MZ48-8-8	OSPP400A00001200003000000	CE040C01N13N	TDA032EW09A2NLW
1NU1-316	OSPP400A00001200005000000	CE040C01N99N	TDA032EW09A2NXW
1NU1-B	OSPP400A00001200005000000	CE040C01S00N	TDA032EW09B2NLW
1NW46-15-4	OSPP400A00001250000000000	CE040C01S00V	TDA032EW09B2NXW
1NW46-15-5	OSPP400A00001250000000000	CE040C01S08N	TDA032EW09B2VXW
1NW46-15-6	OSPP400A00001420000000000	CE040C01S10N	TDA040EW09A2NLW
1NW48-15-4	OSPP400A00001420000000000	CE040C01S12N	TDA040EW09A2NXW
1NW48-15-5	OSPP400A00001770000B00000	CE040C01S13N	TDA040EW09A2VXW
1NW48-15-6	OSPP400A00001770000B00000	CE040C01S15N	TDA040EW09B2NLW
1P40NBL	OSPP400A00001810000B00000	CE040C01S99N	TDA040EW09B2NXW
1-P-436	OSPP400A00001810000B00000	CE040C01T00N	TDA040EW09B2VLW
1-P-451	OSPP400A00002080005000000	CE040C01T12N	TDA040EW09B2VXW
1P470-10-10	OSPP400A00002080005000000	CE040C01U00N	TDA050EW09A2NLW
1P470-12-12	OSPP400A00002325C0020000X	CE040C01U08N	TDA050EW09A2NXW
1P470-16-16	OSPP400A00002325C0020000X	CE040C01U08V	TDA050EW09B2NLW
1P470-8-8	OSPP400A00002325C0060000X	CE040C01U12N	TDA050EW09B2NXW
1-P-475	OSPP400A00002325C0060000X	CE040C01U13N	TDA050EW09B2VXW
1-P-507X	OSPP400A01000550001000000	CE040C01U14N	TDA063EW09A2NLW
1-P-584	OSPP400A01000550001000000	CE040C01U99N	TDA063EW09A2NXW
1-P-584X	OSPP400A01001800000000000	CE040C04A00N	TDA063EW09B2NLW
1-P-603X	OSPP400A01001800000000000	CE040C04L00N	TDA063EW09B2NXW
1-P-609X	OSPP400B00000200000000000	CE040C04L00V	TDA063EW09B2VLW
1PC1-316	OSPP400B00000200000000000	CE040C04N00N	TDA063EW09B2VXW
1PC2-316	OSPP400B00000200004000000	CE040C04N00V	TDA080EW09A2NLW
1PC4-316	OSPP400B00000200004000000	CE040C04N10N	TDA080EW09A2NXW
1PHPX-5.5-03S-LPG	OSPP400B00001150005000000	CE040C04S00N	TDA080EW09B2NLW
1PW46-10-4	OSPP400B00001150005000000	CE040C04S00V	TDA080EW09B2NXW
1PW46-10-5	OSPP401000000600000H00000	CE040C04S12N	TDA100EW09A2NXW
1PW46-10-6	OSPP401000000600000H00000	CE040C04S20N	TDA100EW09B2NLW
1PW46-11-4	OSPP40100000912000000000	CE040C04S99N	TDA100EW09B2NXW
1PW46-11-5	OSPP40100000912000000000	CE040C04T00N	TDAC287E32LAF
1PW48-10-4	OSPP401000001340000HH0000	CE040C04U00N	TDAC487E50LAF
1PW48-10-5	OSPP401000001340000HH0000	CE040C04U00V	TDADV1007P04LA
1PW48-10-6	OSPP40100000001800000000000	CE040C04U99N	TDADV1007P04MA
1PW48-11-4	OSPP40100000001800000000000	CE040C07L00N	TDAE297P25LAF
1PW48-11-5	OSPP40100010080000000000	CE040C07N00N	TDAEB5P20
1PXB100M09B1J1H	OSPP40100010080000000000	CE040C07N99N	TDAEX5P20
1PY70-10-10	OSPP40100010134000000000	CE040C07S00N	TDL063EH99B2NB0
1PY70-12-12	OSPP40100010134000000000	CE040C07S00V	TDL063EH99B2NB0X959
1PY70-16-16	OSPP401000101340000HH0000	CE040C07S10N	TDL080EH99B2NB0
1PZ70-10-10	OSPP401000101340000HH0000	CE040C07S12N	TDL100EH99B2NB0

1PZ70-12-12	OSPP40120010094800020000	CE040C07S13N	TDL100EH99B2NB0X959
1PZ70-16-16	OSPP40120010094800020000	CE040C07S15N	TDP032EH99C2NB0
1PZ70-8-8	OSPP40221210150000100000Y	CE040C07S99N	TDP032EH99C2VB0
1R8EX-11-012	OSPP40221210150000100000Y	CE040C07T00N	TDP032EH99C8NB0
1R8EX-11-012C	OSPP40221210220000100000Y	CE040C07U00N	TDP040EH79C2NB0
1R8EX-11-02	OSPP40221210220000100000Y	CE040C07U12N	TDP040EH99C2NB0
1RRP	OSPP40600000250000000000	CE040C08L00N	TDP050EH79C2NB0
1SC1-316	OSPP40600000250000000000	CE040C08L00V	TDP050EH99C2NB0
1SC1-B	OSPP40600000500000000000	CE040C08L20N	TDP050EH99C2NB0XG228
1SDLMS060P02500	OSPP40600000500000000000	CE040C08N00N	TDP050EH99C8NB0
1SDLMS060P02500	OSPP40600000600000200000	CE040C08N00V	TDP063EH99C2NB0
1SDPMQ095P05300	OSPP40600000600000200000	CE040C08N15N	TDP063EH99C8NB0
1SDPMQ095P05300	OSPP40600000770000000000	CE040C08S00N	TDP080EH99C2NB0
1TM2X-8-03-HPK	OSPP40600000770000000000	CE040C08S08N	TDP080EH99C8NB0
1TM2X-8-05-HPK	OSPP40600001000000000000	CE040C08S10N	TDP100EH99C2NB0
1TU55-8-8C	OSPP40600001000000000000	CE040C08S12N	TDP100EH99C8NB0
1TU91N-4-4C	OSPP40600001000003000000	CE040C08S13N	TDS120/12.5X
1TU91N-6-6C	OSPP40600001000003000000	CE040C08S99N	TDS120/1D
1TU91N-8-8C	OSPP40600100060000200000	CE040C08T00N	TDS120/1D-02
1TUCM6-316	OSPP40600100060000200000	CE040C08U00N	TDS120/25Y
1TUR2-316	OSPP406001000750300M02000	CE040F01L00N	TDS120A2.5Z
1TUR4-316	OSPP406001000750300M02000	CE040F04L00N	TDS120A2Z
1U05X-4-03	OSPP40610100060000200000	CE040F04L00V	TDW032EW99C2N91JWT129999
1U08X-4-04	OSPP40610100060000200000	CE040F04S00N	TDW050EW89C2N89JW0189999
1U08X-6-04	OSPP40620100025000200000	CE040F08L00N	TDW063EW89C2N09JW0209999
1U08X-6-06	OSPP40620100025000200000	CE040S04S00N	TDW063EW89C2N89JW0209999
1U0AX-4-04W	OSPP40620100040000200000	CE040S04S00V	TDW080EW89C2N09JW0259999
1U0LX-4-03	OSPP40620100040000200000	CE040S04S99N	TDW100EW99C2N00
1U0LX-4-03C	OSPP40680110727000020000	CE040S04U00N	TE0036CW260AAAA
1U0LX-4-04	OSPP40680110727000020000	CE040S04U00V	TE0036CW260AAAB
1U0NX-12-10	OSPP40C000000080000000000	CE040S07S00N	TE0036CW260BBCN
1U0NX-20-16	OSPP40C000000080000000000	CE040S07S00NXG019	TE0036CW260FSAB
1U0NX-4-04	OSPP40C000000150000000000	CE040S07S08N	TE0036CW260LAAY
1U0NX-6-05	OSPP40C000000150000000000	CE040S07S10N	TE0036CW261AAAB
1U0NX-6-06	OSPP40C000000160000000000	CE040S07S12N	TE0036CW280AAAB
1U0NX-8-08C2W	OSPP40C000000160000000000	CE040S07S12N	TE0036CW410AAAA
1U0PC-4-04	OSPP40C000000160000C00000	CE040S07S13NXG019	TE0036CW410AAAB
1U0PC-6-06	OSPP40C000000160000C00000	CE040S07S13VXG019	TE0036CW410FSAB
1U0PX-12-10C2W	OSPP40C000000160060C00000	CE040S07U00N	TE0036CW410LAAY
1U0PX-4-02	OSPP40C000000160060C00000	CE040S08S00N	TE0036CW410LACY
1U0PX-4-02C2W	OSPP40C000000165000000000	CE040S08S00NXG019	TE0036CW410LPCY
1U0PX-4-02C2WS	OSPP40C000000165000000000	CE040S08S00V	TE0036CY260AAAB
1U0PX-4-03	OSPP40C000000200000000000	CE040S08S00VXG019	TE0036DW260AAAB
1U0PX-4-03C2W	OSPP40C000000200000000000	CE040S08U00N	TE0036LW260AAAB
1U0PX-4-03-LPG	OSPP40C000000200060C00000	CE040S08U12N	TE0045CW260AAAB
1U0PX-4-04	OSPP40C000000200060C00000	CE040S10U00N	TE0045CW410LAAY
1U0PX-4-04C2W	OSPP40C000000206000000000	CE050B07U00N	TE0045CY260AAAB
1U0PX-6-04	OSPP40C000000206000000000	CE050C01L00N	TE0050CN260AAAB
1U0PX-6-05	OSPP40C000000220000000000	CE050C01L00V	TE0050CN261AAAB
1U0PX-6-05C2	OSPP40C000000220000000000	CE050C01N00N	TE0050CN410AAAB
1U0PX-6-05C2W	OSPP40C000000250000000000	CE050C01N00V	TE0050CW100AAAB
1U0PX-6-06	OSPP40C000000250000000000	CE050C01N08N	TE0050CW250AAAB
1U0PX-6-06C2W	OSPP40C000000254000000000	CE050C01S00N	TE0050CW260AAAA

1U0PX-8-06	OSPP40C000000254000000000	CE050C01S00V	TE0050CW260AAAB
1U0PX-8-08	OSPP40C000000280000000000	CE050C01S08N	TE0050CW260AAAH
1U0TX-4-025W	OSPP40C000000280000000000	CE050C01S08V	TE0050CW260AANC
1U0TX-4-03W	OSPP40C000000300000000000	CE050C01S12N	TE0050CW260BBCN
1U0TX-4-04W	OSPP40C000000300000000000	CE050C01S14V	TE0050CW260BBCP
1U0YX-12-10C2W	OSPP40C00000030000000F000	CE050C01S15N	TE0050CW260FSAA
1U0YX-2-03	OSPP40C00000030000000F000	CE050C01S20N	TE0050CW260FSAB
1U0YX-4-03	OSPP40C000000400000000000	CE050C01S99N	TE0050CW260KAAD
1U0YX-4-03C2W	OSPP40C000000400000000000	CE050C01T00N	TE0050CW260LAAY
1U0YX-4-04	OSPP40C000000405000000000	CE050C01T00V	TE0050CW261AAAA
1U0YX-4-04C2W	OSPP40C000000405000000000	CE050C01U00N	TE0050CW261AAAB
1U0YX-6-06	OSPP40C000000450000C00000	CE050C01U00V	TE0050CW410AAAB
1U0YX-6-06C2W	OSPP40C000000450000C00000	CE050C01U08N	TE0050CW410LAAY
1U0YX-8-08C2	OSPP40C000000500000000000	CE050C01U12N	TE0050CW411AAAB
1UT46-8-8	OSPP40C000000500000000000	CE050C01U15N	TE0050CW690AAAB
1UT48-8-8	OSPP40C000000530000000000	CE050C04A00N	TE0050CY260AAAB
1UT55-4-4	OSPP40C000000530000000000	CE050C04L00N	TE0050CY260FSAA
1UT55-6-6	OSPP40C000000540000004000	CE050C04N00N	TE0050CY260LAAY
1WE56-8-8-LOT	OSPP40C000000540000004000	CE050C04N99N	TE0050CY261AAAB
1WGG44B	OSPP40C000000565000000000	CE050C04S00N	TE0050DN261AAAB
1X1/2FFMSS	OSPP40C000000565000000000	CE050C04S00V	TE0050DW101AAAB
1X1/2FGMSS	OSPP40C000000570000000000	CE050C04S14N	TE0050DW260AAAB
1X1/2PTR34BL	OSPP40C000000570000000000	CE050C04S99N	TE0050DW261AAAB
1X1/2PTR34MS	OSPP40C000000570100000000	CE050C04T00N	TE0050DW691AAAB
1X1/2PTR34MSS	OSPP40C000000570100000000	CE050C04U00N	TE0050DW700AAAB
1X1/2PTRMSS	OSPP40C000000580000000000	CE050C04U00V	TE0050DY260AAAB
1X1F4OHGS	OSPP40C000000580000000000	CE050C04U99N	TE0050LW260AAAB
1X3/4FF33MS	OSPP40C000000600000000000	CE050C07L00N	TE0050MW100AAAB
1X3/4FF33MSS	OSPP40C000000600000000000	CE050C07N00N	TE0050MW260AAAB
1X3/4FFMSS	OSPP40C000000640000000000	CE050C07N99N	TE0065CN260AAAB
1X3/4FGMSS	OSPP40C000000640000000000	CE050C07S00N	TE0065CN260HAAU
1X3/4PTR34B	OSPP40C000000650000000000	CE050C07S12N	TE0065CN260LAAY
1X3/4PTR34BL	OSPP40C000000650000000000	CE050C07S14N	TE0065CN261AAAB
1X3/4PTR34MS	OSPP40C000000665000000000	CE050C07T00N	TE0065CN411AAAB
1X3/4PTR34MSS	OSPP40C000000665000000000	CE050C07U00N	TE0065CW100AAAB
1X3/4PTR44HBL	OSPP40C000000700000000000	CE050C07U15N	TE0065CW120AAAB
1X3/4PTRMSS	OSPP40C000000700000000000	CE050C08A99N	TE0065CW260AAAA
1X3/8PTR34MSS	OSPP40C000000715000000000	CE050C08L00N	TE0065CW260AAAB
1X548-20-20	OSPP40C000000715000000000	CE050C08N00N	TE0065CW260BBCN
1X548-24-24	OSPP40C000000750000000000	CE050C08N30N	TE0065CW260BBCP
1X548-32-32	OSPP40C000000750000000000	CE050C08S00N	TE0065CW260FSAB
1X577-12-12	OSPP40C000000750000C00000	CE050C08S10N	TE0065CW260FSAL
1X577-16-12	OSPP40C000000750000C00000	CE050C08S11N	TE0065CW260LAAY
1X577-16-16	OSPP40C000000800000000000	CE050C08S13N	TE0065CW261AAAB
1X748-20-20	OSPP40C000000800000000000	CE050C08S14N	TE0065CW261AAAH
1X748-24-24	OSPP40C000000800000C00000	CE050C08S15N	TE0065CW410AAAB
1X748-32-32	OSPP40C000000800000C00000	CE050C08S99N	TE0065CW410FSAB
1X777-12-12	OSPP40C000000820000000000	CE050C08T00N	TE0065CW410LAAY
1X777-16-12	OSPP40C000000820000000000	CE050C08U00N	TE0065CY260LAAY
1X777-16-16	OSPP40C000000850000000000	CE050C08U20N	TE0065CY690AAAB
1X948-20-20	OSPP40C000000850000000000	CE050C08U99N	TE0065DN100AAAB
1X948-24-24	OSPP40C000000885060C00000	CE050F04L00N	TE0065DN101AAAB
1X948-32-32	OSPP40C000000885060C00000	CE050S04S00N	TE0065DW100AAAB

1X977-12-12	OSPP40C000001000000000000	CE050S04U00N	TE0065DW101AAAB
1X977-16-12	OSPP40C000001000000000000	CE050S04U00V	TE0065DY260AAAB
1X977-16-16	OSPP40C000001000000C00000	CE050S07S00N	TE0065LW260AAAB
1X977-20-16	OSPP40C000001000000C00000	CE050S07S00V	TE0065MW100AAAB
1XA73-12-12-1P	OSPP40C000001050000C00000	CE050S07S12N	TE0065MW260AAAB
1XA73-16-12-1P	OSPP40C000001050000C00000	CE050S07S14N	TE0065MW410AAAB
1XA73-16-16-1P	OSPP40C000001100000000000	CE050S07S18N	TE0080CN260AAAB
1XA78-12-12-1P	OSPP40C000001100000000000	CE050S07S99N	TE0080CN261AAAB
1XA78-16-12-1P	OSPP40C000001100000C00000	CE050S07U00N	TE0080CN410AAAB
1XA78-16-16-1P	OSPP40C000001100000C00000	CE050S08A00N	TE0080CW100AAAB
1XA78-20-16-1P	OSPP40C000001150000000000	CE050S08N00N	TE0080CW260AAAA
1XA78-20-20-1P	OSPP40C000001150000000000	CE050S08S00N	TE0080CW260AAAB
1XA78-24-20-1P	OSPP40C000001150000C00000	CE050S08U00N	TE0080CW260AAAH
1XA78-24-24-1P	OSPP40C000001150000C00000	CE063C01L00N	TE0080CW260BBCN
1XE78-16-16-1P	OSPP40C000001200000C00000	CE063C01L00V	TE0080CW260FSAA
1XE78-24-24-1P	OSPP40C000001200000C00000	CE063C01N00N	TE0080CW260FSAB
1XF78-12-12-1P	OSPP40C000001210000000000	CE063C01N15N	TE0080CW260KAAD
1XF78-16-12-1P	OSPP40C000001210000000000	CE063C01N99N	TE0080CW260LAAY
1XF78-16-16-1P	OSPP40C000001220000000000	CE063C01S00N	TE0080CW260LABA
1XF78-20-16-1P	OSPP40C000001220000000000	CE063C01S00V	TE0080CW261AAAA
1XF78-20-20-1P	OSPP40C000001220010000000	CE063C01S13N	TE0080CW261AAAB
1XF78-24-20-1P	OSPP40C000001220010000000	CE063C01S15N	TE0080CW410AAAB
1XF78-24-24-1P	OSPP40C000001250000000000	CE063C01S15V	TE0080CW410AAAH
1XG78-12-12-1P	OSPP40C000001250000000000	CE063C01S99N	TE0080CW410FSAA
1XG78-16-16-1P	OSPP40C000001250000C00000	CE063C01U00N	TE0080CW410LAAY
1XG78-20-16-1P	OSPP40C000001250000C00000	CE063C01U10N	TE0080CW411AAAB
1XG78-20-20-1P	OSPP40C000001270000000000	CE063C01U14V	TE0080CW690AAAB
1XG78-24-24-1P	OSPP40C000001270000000000	CE063C01U99N	TE0080CY100AAAB
1XN73-12-12-1P	OSPP40C000001300000000000	CE063C04A00N	TE0080CY260AAAB
1XN73-16-16-1P	OSPP40C000001300000000000	CE063C04L00N	TE0080CY260FSAA
1XN73-20-20-1P	OSPP40C000001300000C00000	CE063C04L00V	TE0080CY260LAAY
1XN78-12-12-1P	OSPP40C000001300000C00000	CE063C04N00N	TE0080DN100AAAB
1XN78-16-12-1P	OSPP40C000001330000000000	CE063C04N00V	TE0080DW101AAAB
1XN78-16-16-1P	OSPP40C000001330000000000	CE063C04N99N	TE0080DW260AAAA
1XN78-20-16-1P	OSPP40C000001350000C00000	CE063C04S00N	TE0080DW260AAAB
1XN78-20-20-1P	OSPP40C000001350000C00000	CE063C04S00V	TE0080DW260AAAH
1XN78-24-20-1P	OSPP40C000001360000000000	CE063C04S25N	TE0080DW261AAAB
1XN78-24-24-1P	OSPP40C000001360000000000	CE063C04S99N	TE0080DW410AAAB
1XU46-10-10	OSPP40C000001370000000000	CE063C04U00N	TE0080DY260AAAB
1XU46-12-12	OSPP40C000001370000000000	CE063C04U00V	TE0080DY261AAAB
1XU46-16-16	OSPP40C000001400000000000	CE063C04U99N	TE0080LW260AAAB
1XU48-10-10	OSPP40C000001400000000000	CE063C07N00N	TE0080MW100AAAB
1XU48-12-12	OSPP40C000001400000C00000	CE063C07S00N	TE0100CN260AAAB
1XU48-16-16	OSPP40C000001400000C00000	CE063C08L00N	TE0100CN261AAAB
1XU70-10-10	OSPP40C000001400000C02000	CE063C08L00V	TE0100CN410AAAB
1XU70-12-12	OSPP40C000001400000C02000	CE063C08N00N	TE0100CN411AAAB
1XU70-16-16	OSPP40C000001420000C00000	CE063C08N30N	TE0100CW100AAAB
1XU71-10-10	OSPP40C000001420000C00000	CE063C08S00N	TE0100CW101AAAB
1XU71-12-12	OSPP40C000001500000000000	CE063C08S00V	TE0100CW260AAAA
1XU71-16-16	OSPP40C000001500000000000	CE063C08S20N	TE0100CW260AAAB
1XU73-12-12	OSPP40C000001520000C00000	CE063C08S99N	TE0100CW260BBCN
1XU73-16-16	OSPP40C000001520000C00000	CE063C08U00N	TE0100CW260FSAA
1Y2LX-9-06C	OSPP40C000001570000C00000	CE063C08U00V	TE0100CW260KAAD

1Y42X-4-025	OSPP40C000001570000C00000	CE063F01L00N	TE0100CW260LABA
1Y42X-4-03	OSPP40C000001660000000000	CE063F04L00N	TE0100CW260LABF
1Y42X-6-025	OSPP40C000001660000000000	CE063F04L00V	TE0100CW261AAAB
1Y42X-6-03	OSPP40C000001700000000000	CE063F08L00N	TE0100CW261AABK
1Y42X-6-05	OSPP40C000001700000000000	CE063S04A00N	TE0100CW261LAAC
1Y42X-9-03	OSPP40C000001800000000000	CE063S04S00N	TE0100CW410AAAA
1Y42X-9-05	OSPP40C000001800000000000	CE063S04U00N	TE0100CW410AAAB
1Y98X-4-04	OSPP40C000001875000000000	CE063S04U00V	TE0100CW410FSAA
1Y9LX-4-03	OSPP40C000001875000000000	CE063S07S00N	TE0100CW411AAAB
1YA5X-1-03	OSPP40C000001900000000000	CE063S07S20N	TE0100CW690AAAA
1YA5X-1-03C	OSPP40C000001900000000000	CE063S07U00N	TE0100CW690AAAB
1YA5X-3-03	OSPP40C000001950000000000	CE063S08S00N	TE0100CY260AAAB
1YAJX-1-025W	OSPP40C000001950000000000	CE063S08S00VXG019	TE0100CY260LAAY
1YAJX-3-025W	OSPP40C000002000000000000	CE063S08U00N	TE0100DN101AAAB
1YAJX-3-03W	OSPP40C000002000000000000	CE063S10U00N	TE0100DN260AAAB
1YAJX-6-03W	OSPP40C000002100000000000	CE080C01N00N	TE0100DW100AAAB
1YAKX-6-05W	OSPP40C000002100000000000	CE080C01N99N	TE0100DW101AAAB
1YALX-1-025	OSPP40C000002200000000000	CE080C01S00N	TE0100DW260AAAB
1YALX-1-025W	OSPP40C000002200000000000	CE080C01S16N	TE0100DW261AAAB
1YALX-1-03	OSPP40C000002300000000000	CE080C01U00N	TE0100DW700AAAB
1YALX-1-03C	OSPP40C000002300000000000	CE080C01U00V	TE0100LW260AAAB
1YALX-3-025W	OSPP40C000002400000000000	CE080C01U20N	TE0100LW260BBCN
1YALX-3-03	OSPP40C000002400000000000	CE080C01U99N	TE0100MW260AAAB
1YALX-3-03C	OSPP40C000002500000000000	CE080C04L00N	TE0130AS110AAAG
1YALX-3-03W	OSPP40C000002500000000000	CE080C04L00V	TE0130CN100AAAB
1YALX-3-04W	OSPP40C000002600000000000	CE080C04N00N	TE0130CN260AAAB
1YALX-6-03	OSPP40C000002600000000000	CE080C04N00V	TE0130CN261AAAB
1YALX-6-04	OSPP40C000002635000000000	CE080C04S00N	TE0130CN410AAAB
1YALX-6-05	OSPP40C000002635000000000	CE080C04S00V	TE0130CN411AAAB
1YALX-6-05C	OSPP40C00010065000000F000	CE080C04U00N	TE0130CN411HABB
1YALX-6-05W	OSPP40C00010065000000F000	CE080C04U00V	TE0130CW100AAAB
1YALX-6-06W	OSPP40C001000100000000000	CE080C04U99N	TE0130CW120AAAB
1YAVX-1-025W	OSPP40C001000100000000000	CE080C08N00N	TE0130CW250AAAB
1YAVX-3-03W	OSPP40C001000500000000000	CE080C08S00N	TE0130CW260AAAA
1YAVX-6-03W	OSPP40C001000500000000000	CE080C08S00V	TE0130CW260AAAB
1YAVX-6-05W	OSPP40C001000750000000000	CE080C08S08N	TE0130CW260BBCN
1YAZX-1-03W	OSPP40C001000750000000000	CE080C08S10N	TE0130CW260FSAA
1YAZX-3-03W	OSPP40C010000300000000000	CE080C08S16N	TE0130CW260KAAD
1YAZX-6-05W	OSPP40C010000300000000000	CE080C08U00N	TE0130CW260LAAY
1YB5X-4-03	OSPP40C010000380000000000	CE080F01L00N	TE0130CW261AAAB
1YB5X-4-03S3	OSPP40C010000380000000000	CE080F04L00N	TE0130CW410AAAB
1YBAX-4-05W	OSPP40C010000550000000000	CE080F04L00V	TE0130CW410LAAY
1YBKX-4-05W	OSPP40C010000550000000000	CE080S01S00N	TE0130CW411AAAB
1YBKX-6-05W	OSPP40C010000740000C00000	CE080S01U00N	TE0130CW411KAAD
1YBKY-4-05	OSPP40C010000740000C00000	CE080S04A00N	TE0130CW690AAAB
1YBKY-6-05	OSPP40C010000900000000000	CE080S04S00N	TE0130CY260AAAB
1YBLX-2-03	OSPP40C010000900000000000	CE080S04U00N	TE0130DW250AAAB
1YBLX-4-03	OSPP40C010000985000000000	CE080S08S00N	TE0130DW260AAAB
1YBLX-4-04S2	OSPP40C010000985000000000	CE100C01L00N	TE0130DW261AAAB
1YBLX-4-05	OSPP40C010001000100000000	CE100C01N00N	TE0130DY261AAAB
1YBTX-2-025	OSPP40C010001000100000000	CE100C01N30N	TE0130FS250AAAA
1YBTX-2-025W	OSPP40C010001833000C00000	CE100C01S00N	TE0130LW100AAAB
1YBTX-2-03W	OSPP40C010001833000C00000	CE100C01S00V	TE0130LW250AAAB

1YBTX-2-04W	OSPP40C010100500000000000	CE100C01U00N	TE0130LW260AAAB
1YBTX-4-025W	OSPP40C010100500000000000	CE100C04N00N	TE0130LW410BBCN
1YBTX-4-03W	OSPP40C010101535000000000	CE100C04N00V	TE0130MW100AAAB
1YBTX-4-04W	OSPP40C010101535000000000	CE100C04S00N	TE0130MW260AAAB
1YBTX-4-05W	OSPP40C100000450000C00000	CE100C04S25N	TE015001
1YM2X-6-03	OSPP40C100000450000C00000	CE100C04U00N	TE016000
1YM2X-6-05	OSPP40C110000850000000000	CE100C04U00V	TE0165CN250AAAB
1YMDX-6-05W	OSPP40C110000850000000000	CE100C08A99N	TE0165CN260AAAB
1YMJX-12-08W	OSPP40C11000085000000F000	CE100C08N00N	TE0165CN260HAAU
1YMJX-6-03W	OSPP40C11000085000000F000	CE100C08S00N	TE0165CN261AAAB
1YMLX-6-05W	OSPP40C210000740070C00000	CE100C08U00N	TE0165CN410AAAB
1YMVX-6-03W	OSPP40C210000740070C00000	CE100F04L00V	TE0165CN411AAAB
1YMZX-6-03W	OSPP40C500001300000000000	CE100S01U00N	TE0165CW100AAAB
1YMZX-6-05W	OSPP40C500001300000000000	CE100S04S00N	TE0165CW120AAAB
1YPEX-3-012	OSPP40C500002600000000000	CE100S04U00N	TE0165CW120AAAH
1YREX-10-012	OSPP40C500002600000000000	CE100S08S00N	TE0165CW250AAAB
1YREX-11-012	OSPP40CB0000080000000F000	CE100S08S99N	TE0165CW260AAAA
1YW91N-10-6C	OSPP40CB0000080000000F000	CE100S08U00N	TE0165CW260AAAB
1YW91N-12-8C	OSPP50000000004000000F000	CE387857	TE0165CW260AAAH
1YW91N-6-4C	OSPP50000000004000000F000	CF049824U014	TE0165CW260AABK
1YW91N-8-4C	OSPP50000000050000000000	CF049826	TE0165CW260BBCN
1YZTX-1-02WS	OSPP50000000050000000000	CF054424U014	TE0165CW260FSAA
1YZTX-2-025W	OSPP50000000050000300000	CF056719U014	TE0165CW260FSAB
1YZTX-2-02W	OSPP50000000050000300000	CF056719U016	TE0165CW260KAAD
1YZTX-4-025W	OSPP50000000080000000000	CF057273U016	TE0165CW260LAAY
1YZTX-4-03W	OSPP50000000080000000000	CF057274U014	TE0165CW261AAAB
1YZTX-5-025W	OSPP50000000008010000B000	CF057274U016	TE0165CW261AAAH
1YZTX-5-04W	OSPP50000000008010000B000	CF057366U016	TE0165CW410AAAB
1ZM73-22-12	OSPP50000000100000000000	CF385522U016	TE0165CW410BBCN
1ZM73-28-16	OSPP50000000100000000000	CF385524U016	TE0165CW410LAAY
1ZM73-35-16	OSPP50000000010000000F000	CF385524U022	TE0165CW411AAAB
1ZM78-28-16	OSPP50000000010000000F000	CF385525U016	TE0165CW690AAAA
2 ALOK-316-SET	OSPP50000000100100000000	CF4-1	TE0165CW690AAAB
2 ALOK-B-SET	OSPP50000000100100000000	CF4-35	TE0165CY260AAAB
2 BTX-S	OSPP50000000010010000B000	CF4-5	TE0165CY260LAAY
2 BU-S	OSPP50000000010010000B000	CF463139U014	TE0165CY261AAAB
2 BZ-B	OSPP50000000120000000000	CF4-65	TE0165DW100AAAB
2 BZI-SS	OSPP50000000120000000000	CF465340U016	TE0165DW101AAAB
2 BZP-SS	OSPP50000000120100000000	CF465341U016	TE0165DW250AAAB
2 BZ-SS	OSPP50000000120100000000	CF465526U016	TE0165DW260AAAB
2 C5OX-S	OSPP500000000120300M00000	CF465646U016	TE0165DY690AAAB
2 CP-B	OSPP500000000120300M00000	CF465947U016	TE0165LW120AAAB
2 CP-SS	OSPP50000000125000000000	CF466697U016	TE0165LW260BBCN
2 CP-SSHP	OSPP50000000125000000000	CF466767U016	TE0165MW261AAAB
2 CTX-S	OSPP500000000125000B00000	CF466768U016	TE0195CN100AAAB
2 ETX-S	OSPP500000000125000B00000	CF466796U016	TE0195CN260AAAB
2 F5OX-S	OSPP50000000125100000000	CF469820U016	TE0195CN260HAAP
2 FF-S	OSPP50000000125100000000	CF470348	TE0195CN261AAAB
2 FNTX-S	OSPP50000000012510000B000	CF470349	TE0195CN410AAAB
2 FNTX-SS	OSPP50000000012510000B000	CF4C15	TE0195CN410HAAP
2 FNZ-B	OSPP50000000135000000000	CF4C15	TE0195CN411AAAB
2 FNZ-SS	OSPP50000000135000000000	CF6-35	TE0195CN411HAAP
2 FTX-S	OSPP50000000160000000000	CF6-5	TE0195CW100AAAB

2 FX-SS	OSPP500000000160000000000	CF6-65	TE0195CW100BBCN
2 GG-S	OSPP500000000160000000F000	CF9-35	TE0195CW100BBCP
2 HBU-S	OSPP500000000160000000F000	CF9-5	TE0195CW250AAAB
2 HHP-S	OSPP500000000160100000000	CF9-65	TE0195CW260AAAA
2 HHP-SS	OSPP500000000160100000000	CFE-1002-P	TE0195CW260AAAB
2 HP5ON-S	OSPP500000000160100000B000	CFE-252-P	TE0195CW260BBCM
2 HP5ON-S BP	OSPP500000000160100000B000	CFE-372-P	TE0195CW260FSAB
2 HP5ON-S V0894	OSPP500000000170000000000	CFE-372-P-BULK	TE0195CW260KAAD
2 HP5ON-SS	OSPP500000000170000000000	CFE-372-PRD-BULK	TE0195CW261AAAB
2 HP-S	OSPP500000000180000400000	CFE-502-P	TE0195CW261LAAA
2 HTX-S	OSPP500000000180000400000	CFE-622-P	TE0195CW410AAAB
2 JBU-S	OSPP500000000200000000000	CFE-752-P	TE0195CW410BBCN
2 KBZ-B	OSPP500000000200000000000	CFPH05	TE0195CW411AAAB
2 KBZ-SS	OSPP500000000020000000F000	CFPH05	TE0195CW690AAAB
2 MDF-SS	OSPP500000000020000000F000	CFPH15	TE0195CY261AAAB
2 P5ON-S	OSPP500000000200000A00000	CFPH15	TE0195DN100AAAB
2 PANEL NUT-SS	OSPP500000000200000A00000	CG03410K	TE0195DW100AAAB
2 PH-B	OSPP500000000200001000000	CG4400	TE0195DW101AAAB
2 PHH-625	OSPP500000000200001000000	CG4800	TE0195DW250AAAB
2 PHH-6MO	OSPP500000000200005000000	CG8400	TE0195DW260AAAB
2 PHH-B	OSPP500000000200005000000	CG8600	TE0195DW260AAAH
2 PH-HC	OSPP500000000200100000000	CG8900	TE0195DW261AAAB
2 PHH-S	OSPP500000000200100000000	CG9800	TE0195DW261AAAH
2 PHH-SS	OSPP500000000020010000B000	CG9800-SOGWO	TE0195DW411AAAB
2 PH-SS	OSPP500000000020010000B000	CGL40	TE0195DY100AAAB
2 PNBZ-B	OSPP500000000220000000000	CGL40-316SOG	TE0195DY690AAAB
2 PNBZ-SS	OSPP500000000220000000000	CGL50	TE0195LW120AAAB
2 PNTX-S	OSPP500000000220005000000	CGL60	TE0195LW120AANE
2 TU-S	OSPP500000000220005000000	CGL60-316SOG	TE0195LW250AAAB
2 TX-S	OSPP500000000225000000000	CGL90	TE0195MN100AAAB
2 TZ-B	OSPP500000000225000000000	CGL90-316SOG	TE0195MW260AAAB
2 TZ-SS	OSPP500000000225000A00000	CGL90-316SOGMC	TE0230CN260AAAA
2 TZ-SS-C	OSPP500000000225000A00000	CGL90-HCSOG-HEX	TE0230CN260AAAB
2 TZ-T	OSPP500000000235000000000	CGLX120	TE0230CN410AAAB
2 TZ-ZY	OSPP500000000235000000000	CGLX120-25-4MOH	TE0230CN411AAAB
2 WLZ-SS	OSPP500000000250000000000	CGLX120-316SOG	TE0230CW100AAAB
2 X 1 1/2 PTR-S	OSPP500000000250000000000	CGLX120-SOGSMT	TE0230CW101AAAB
2 X 1 1/4 PTR-S	OSPP500000000025000000F000	CGLX160	TE0230CW120AAAB
2.00NLPV9X3.50	OSPP500000000025000000F000	CGLX160-316SOG	TE0230CW250AAAB
2.00NLPV9X3.50	OSPP500000000250000200000	CGLX240	TE0230CW260AAAB
20 AOEL6-S	OSPP500000000250000200000	CGLX40	TE0230CW260AAAH
20 BL-S	OSPP500000000250060B00000	CGLX40-316SOG	TE0230CW260FSAA
20 BL-SS	OSPP500000000250060B00000	CGLX40-MC	TE0230CW260KAAD
20 BODY DIE	OSPP500000000025010000B000	CGLX40-SMT	TE0230CW260LAAY
20 BTX-B	OSPP500000000025010000B000	CGLX40-SOGSMT	TE0230CW261AAAB
20 BTX-S	OSPP500000000300000000000	CGLX60	TE0230CW410AAAB
20 BTX-SS	OSPP500000000300000000000	CGLX60-316SOG	TE0230CW410BBCP
20 BU-S	OSPP500000000030000000F000	CGLX60-SMT	TE0230CW411AAAB
20 BZ-SS	OSPP500000000030000000F000	CGLX60-SOGSMT	TE0230CW690AAAB
20 C5BU-S	OSPP500000000300000200000	CGLX90	TE0230CY260AAAB
20 C5OLO-S	OSPP500000000300000200000	CGLX90-2507	TE0230CY260LAAY
20 C5OX-S	OSPP500000000300100000000	CGLX90-25-4MOH	TE0230DW100AAAB
20 C6BU-S	OSPP500000000300100000000	CGLX90-316SOG	TE0230DW260AAAB

20 C6LO-S	OSPP50000000030010000B000	CGLX90-IN625H	TE0230DY251AAAB
20 C6X-S	OSPP50000000030010000B000	CGLX90-SMT	TE0230LW250AAAB
20 C6X-S PLUG	OSPP50000000320000000000	CGLX90-SOGSMT	TE0230LW260AAAB
20 CBU-S	OSPP50000000320000000000	CGLX90-Z100	TE0230MW410AAAB
20 CLO-S	OSPP50000000320000100000	CG-PS60-004-50536/MU-324	TE0260CN260AAAB
20 CTX-B	OSPP50000000320000100000	CG-RS115-010-50629	TE0260CN261AAAB
20 CTX-S	OSPP500000000320000D00000	CG-RS142-050-50494/MU-078	TE0260CN411AAAB
20 DTX-S	OSPP500000000320000D00000	CH1/8-27PTF	TE0260CW100AAAB
20 EBU-S	OSPP50000000330000000000	CH110353	TE0260CW120AAAB
20 ELO-S	OSPP50000000330000000000	CH120114	TE0260CW260AAAB
20 F5BU-S	OSPP50000000350000000000	CH120154	TE0260CW260FSAA
20 F5OHAO-S	OSPP50000000350000000000	CH130035	TE0260CW260FSAB
20 F5OLO-S	OSPP50000000350000400000	CH130354	TE0260CW260KAAD
20 F5OX-S	OSPP50000000350000400000	CH150323	TE0260CW260LAAY
20 F65OL-S	OSPP500000000350000B00000	CH20R	TE0260CW261AAAB
20 F65OX-S	OSPP500000000350000B00000	CH20R	TE0260CW410AAAB
20 F6X-S	OSPP50000000360000000000	CH230014	TE0260CW690AAAB
20 FBU-S	OSPP50000000360000000000	CH25R	TE0260CY100AAAB
20 FBU-SS	OSPP50000000365000000000	CH25R	TE0260CY260AAAB
20 FF5OLO-S	OSPP50000000365000000000	CH390054	TE0260CY261AAAB
20 FLO-S	OSPP50000000370000000000	CH430014	TE0260DW100AAAB
20 FLO-SS	OSPP50000000370000000000	CH430024	TE0260DW101AAAB
20 FNLBA-S	OSPP50000000380000000000	CH540033	TE0260DW260AAAB
20 FNL-S	OSPP50000000380000000000	CH570044	TE0260DW261KAAD
20 FNTX-B	OSPP50000000400000000000	CH570084	TE0260LW120AAAB
20 FNTX-S	OSPP50000000400000000000	CH580025	TE0260LW120AANE
20 FNU-S	OSPP50000000400000800000	CH580164	TE0260MW260AAAB
20 FNZ-SS	OSPP50000000400000800000	CH590016	TE0260MW410KAAD
20 G6X-S	OSPP500000000400000A00000	CH590075	TE0295AS100AAAA
20 GTX-S	OSPP500000000400000A00000	CH590085	TE0295CN260LABF
20 HBU-S	OSPP50000000400000005000000	CH590095	TE0295CN411AAAB
20 HLO-S	OSPP50000000400000005000000	CH590554	TE0295CW100AAAB
20 HP5ON-S	OSPP50000000400100000000	CI463511	TE0295CW260AAAB
20 HP5ON-S V0894	OSPP50000000400100000000	CI465593	TE0295CW260KAAD
20 HTX-S	OSPP50000000040010000B000	CI465859	TE0295CW261AAAB
20 JBU-S	OSPP50000000040010000B000	CI465892U014	TE0295CW410AAAB
20 JLO-S	OSPP50000000041500001000	CI465892U020	TE0295CW690AAAB
20 JTX-S	OSPP50000000041500001000	CI468595U015	TE0295CY260LAAY
20 KLO-S	OSPP50000000420000000000	CI470441U005	TE0295DW100BBCN
20 LHQ1-S	OSPP50000000420000000000	CI470521U001	TE0295DW101AAAB
20 LHQ2-S	OSPP50000000430000000000	CI470559U008	TE0295DW250AAAB
20 LOEQ2-S	OSPP50000000430000000000	CJ12501	TE0295DW250AAKA
20 LOHB3-S	OSPP50000000440000000000	CJ12501	TE0295DW260AAAB
20 LOHQ1-S	OSPP50000000440000000000	CK049161	TE0295LW250LABG
20 LOHQ2-S	OSPP500000000440000H00000	CK4402	TE0295MN260AAAB
20 LOVQ1-S	OSPP500000000440000H00000	CK466151U018	TE0295MS260AAAA
20 LOVQ2-S	OSPP50000000450000000000	CK467240	TE0295MW260AAAB
20 LVQ1-S	OSPP50000000450000000000	CK6602	TE0330AW260AAAA
20 LVQ2-S	OSPP50000000450005000000	CK9902	TE0330CN260AAAB
20 NUT DIE	OSPP50000000450005000000	CK9902-SOGWO	TE0330CN260HAAP
20 OTX-S	OSPP500000000450005A00000	CKCBXCN	TE0330CN261AAAB
20 P5ON-S	OSPP500000000450005A00000	CKEVXCN	TE0330CN411AAAB
20 PH-SS	OSPP50000000046000000F000	CKGB-XCN	TE0330CW100AAAB

20 PNBZ-SS	OSPP50000000046000000F000	CKO4400	TE0330CW101AAAB
20 PNLO-S	OSPP50000000480005000000	CKO4400-SOG	TE0330CW260AAAA
20 PNTX-S	OSPP50000000480005000000	CKO4400-SOGWO	TE0330CW260AAAB
20 R5OLO-S	OSPP50000000500000000000	CKO6600	TE0330CW260BBCP
20 R5OX-S	OSPP50000000500000000000	CKO6600-SOGWO	TE0330CW260FSAB
20 R6LO-S	OSPP50000000050000000F000	CKO6600-SOGWOTO	TE0330CW260KAAF
20 R6X-S	OSPP50000000050000000F000	CKO6600-TO	TE0330CW260LAAY
20 RTX-S	OSPP50000000500000200000	CKO9900	TE0330CW261AAAB
20 S5OLO-S	OSPP50000000500000200000	CKO9900-SOG	TE0330CW411KAAD
20 S6LO-S	OSPP50000000500000300000	CKO9900-SOGWO	TE0330DN260AAAB
20 S6X-S	OSPP50000000500000300000	CKO9900-TO	TE0330DW260AAAB
20 S6X-SS	OSPP50000000500005000000	CKR105	TE0330LW120AAAB
20 SBR	OSPP50000000500005000000	CKR105	TE0330LW250AAAB
20 STX-S	OSPP50000000520000000000	CKR364Y	TE0330LW250LABG
20 TL-S	OSPP50000000520000000000	CKR364Y	TE0330LW260AAAB
20 TPL-S	OSPP500000000520000D00000	CL4400	TE0330MN260AAAB
20 TPL-SS	OSPP500000000520000D00000	CL4400-PM	TE0330MW260AAAB
20 TU-S	OSPP50000000520005000000	CL4400-SOG	TE0365CW100AAAB
20 TU-SS	OSPP50000000520005000000	CL4400-SOGWO	TE0365CW260AAAA
20 TX-B	OSPP50000000550000000000	CL4445	TE0365CW260AAAB
20 TX-S	OSPP50000000550000000000	CL5500	TE0365CY260AAAB
20 TX-SS	OSPP50000000550000600000	CL6600	TE0365DW260AAAB
20 TZ-SS	OSPP50000000550000600000	CL6600-K	TE0365MW260AAAB
20 V5OLO-S	OSPP50000000550005000000	CL6600-SOG	TE0365MW261AAAB
20 V5OX-S	OSPP50000000550005000000	CL6645	TE0365MW411LAAY
20 V6LO-S	OSPP50000000560000000000	CL9900	TE0390CN260AAAB
20 V6X-B	OSPP50000000560000000000	CL9900-SOG	TE0390CW100AAAB
20 V6X-S	OSPP50000000590000400000	CL9900-SOGWO	TE0390CW260AAAA
20 VTX-S	OSPP50000000590000400000	CL9945	TE0390CW260AAAB
20 WELO-S	OSPP50000000600000000000	CL9945-316SOG	TE0390CW260FSAB
20 WELO-WLNL-S	OSPP50000000600000000000	CLF4400	TE0390CW260KAAD
20 WETX-WLN-S	OSPP50000000600000200000	CLF4400-10/35	TE0390CW261AAAB
20 WLNL-S	OSPP50000000600000200000	CLF4400-5/10	TE0390CW690AAAB
20 WLN-S	OSPP50000000600001000000	CLF6600	TE0390CY260FSAB
20 WLO-S	OSPP50000000600001000000	CLF6600-10/35	TE0390DW261AAAB
20 WLO-WLNL-S	OSPP50000000610000000000	CLF6600-5/10	TE0390LW120AAAB
20 WNLO-S	OSPP50000000610000000000	CLF9900	TE0390LW120AANE
20 WNLO-WLNL-S	OSPP50000000620000000000	CLF9900-10/35	TE0390LW121AAAB
20 WNTX-WLN-S	OSPP50000000620000000000	CLF9900-5/10	TE0390LW250AAAB
20 XHL6-S	OSPP50000000620005000000	CLFX9900	TE0390LW250LABG
20 XHLO-S	OSPP50000000620005000000	CLFX9900-10/35	TE0390LW251LABG
20 XHQ1-S	OSPP50000000650000000000	CLFX9900-5/10	TE0390MW260AAAB
20 XHQ2-S	OSPP50000000650000000000	CLIP 04 00	TE04LLMCF
20 XVQ2-S	OSPP50000000065000000F000	CLIP 06 00	TE04LLRCF
20000-PSN	OSPP50000000065000000F000	CLIP 08 00	TE04LLRCFX
20000-PSV	OSPP50000000650000200000	CLIP 10 00	TE06L1/8NPTCF
20000-PSV	OSPP50000000650000200000	CLIP 12 00	TE06LLMCF
20001-01	OSPP50000000650003000000	CLIP 14 00	TE06LLR71
2000-25-00100-0000-000000	OSPP50000000650003000000	CLS110-04	TE06LLRCF
2000-25-00100-0000-000000	OSPP50000000650005000000	CLS110-06	TE06LLRCFX
2000-25-00125-0000-000000	OSPP50000000650005000000	CLS110-10	TE06LLRMS
2000-25-00125-0000-000000	OSPP50000000680000200000	CLS46	TE06LMCF
2000-25-00135-0000-000000	OSPP50000000680000200000	CLS46CONNECTOR	TE06LMCFX

2000-25-00135-0000-000000	OSPP500000000700000000000	CLS46S01	TE06LR71
2000-25-00140-0000-000000	OSPP500000000700000000000	CLX12	TE06LRCF
2000-25-00140-0000-000000	OSPP500000000700000600000	CLX12-SOG	TE06LRCFX
2000-25-00150-0000-000000	OSPP500000000700000600000	CLX12-SOGWO	TE06LRSPH71
2000-25-00150-0000-000000	OSPP500000000700000D00000	CLX12-WOD	TE06SMCFX
2000-25-00160-0000-000000	OSPP500000000700000D00000	CLX16	TE06SR71
2000-25-00160-0000-000000	OSPP500000000700005000000	CLX1645	TE06SRCF
2000-25-00177-0000-000000	OSPP500000000700005000000	CLX16-WO	TE06SRCFX
2000-25-00177-0000-000000	OSPP500000000720000000000	CLX24	TE08LLMCF
2000-25-00180-0000-000000	OSPP500000000720000000000	CLX4400	TE08LLR71
2000-25-00180-0000-000000	OSPP500000000725000000000	CLX6600	TE08LLRCF
2000-25-00190-0000-000000	OSPP500000000725000000000	CLX9900	TE08LLRCFX
2000-25-00190-0000-000000	OSPP500000000750000000000	CLX9900-SOG	TE08LMCF
2000-25-00200-0000-000000	OSPP500000000750000000000	CLX9945	TE08LMCFX
2000-25-00200-0000-000000	OSPP500000000750004000000	CM052666	TE08LR71
2000-25-00200-0000-000020	OSPP500000000750004000000	CM056316U050	TE08LRCF
2000-25-00200-0000-000020	OSPP500000000750005000000	CM056316U100	TE08LRCFX
2000-25-00220-0000-000000	OSPP500000000750005000000	CM057375U300	TE08LRMS
2000-25-00220-0000-000000	OSPP500000000755000000000	CM163CJ-116898	TE08SM71
2000-25-00230-0000-000000	OSPP500000000755000000000	CM233XR-116833	TE08SRCF
2000-25-00230-0000-000000	OSPP500000000770000000000	CM2AAFV	TE08SRCFX
2000-25-00240-0000-000000	OSPP500000000770000000000	CM2AAV	TE08SRMS
2000-25-00240-0000-000000	OSPP500000000800000000000	CM2BBFV	TE10/06
2000-25-00250-0000-000000	OSPP500000000800000000000	CM2BBV	TE10/08
2000-25-00250-0000-000000	OSPP500000000800000200000	CM2DDFV	TE10/10
2000-25-00250-1000-000000	OSPP500000000800000200000	CM2DDV	TE10L1/4NPTCF
2000-25-00250-1000-000000	OSPP500000000800000B00000	CM2PPV	TE10LLRCF
2000-25-00260-0000-000000	OSPP500000000800000B00000	CM2PPVXG047	TE10LMCF
2000-25-00260-0000-000000	OSPP500000000800001000000	CM2PTV	TE10LR71
2000-25-00296-0000-000000	OSPP500000000800001000000	CM2TTV	TE10LR71X
2000-25-00296-0000-000000	OSPP500000000800004000000	CM385828	TE10LRCF
2000-25-00300-0000-000000	OSPP500000000800004000000	CM387063	TE10LRCFX
2000-25-00300-0000-000000	OSPP500000000800005000000	CM389812	TE10LRMS
2000-25-00300-1000-000000	OSPP500000000800005000000	CM3AAFV	TE10LRSPH71
2000-25-00300-1000-000000	OSPP500000000800200200000	CM3AAV	TE10SR71
2000-25-00300-1101-000000	OSPP500000000800200200000	CM3BBFV	TE10SRCF
2000-25-00300-1101-000000	OSPP500000000805000000000	CM3BBV	TE10SRMS
2000-25-00310-0000-000000	OSPP500000000805000000000	CM3DDFV	TE12LLRCF
2000-25-00310-0000-000000	OSPP500000000810005000000	CM3DDV	TE12LMCF
2000-25-00320-0000-000000	OSPP500000000810005000000	CM3PPV	TE12LR71
2000-25-00320-0000-000000	OSPP500000000830000000000	CM3TTV	TE12LR71X
2000-25-00340-0000-000000	OSPP500000000830000000000	CM465943U001	TE12LRCF
2000-25-00340-0000-000000	OSPP500000000850000000000	CM466571	TE12LRCFX
2000-25-00350-0000-000000	OSPP500000000850000000000	CM466582	TE12SMCF
2000-25-00350-0000-000000	OSPP500000000850005000000	CM466587	TE12SRCF
2000-25-00360-0000-000000	OSPP500000000850005000000	CM466588	TE13/06
2000-25-00360-0000-000000	OSPP500000000870000H00000	CM466589U001	TE13/08
2000-25-00365-0000-000000	OSPP500000000870000H00000	CM466771	TE13/10
2000-25-00365-0000-000000	OSPP500000000890000000000	CM466772	TE15LMCF
2000-25-00369-0000-000000	OSPP500000000890000000000	CM467762U001	TE15LR71
2000-25-00369-0000-000000	OSPP500000000900000000000	CM467762U002	TE15LR71X
2000-25-00375-0000-000000	OSPP500000000900000000000	CM467762U003	TE15LRCF
2000-25-00375-0000-000000	OSPP500000000900005000000	CM467781U001	TE15LRCFX

2000-25-00380-0000-000000	OSPP50000000900005000000	CM468466U001	TE15LRMS
2000-25-00380-0000-000000	OSPP50000000930000000000	CM471050	TE15X200MBPW
2000-25-00385-0000-000000	OSPP50000000930000000000	CM702XE-117736	TE16SR71
2000-25-00385-0000-000000	OSPP50000000950000000000	CMD04-1	TE16SRCF
2000-25-00400-0000-000000	OSPP50000000950000000000	CMD04-1	TE16SRCFX
2000-25-00400-0000-000000	OSPP50000000970005000000	CMD06-1	TE18LR71
2000-25-00400-1000-010000	OSPP50000000970005000000	CMD06-1	TE18LR71X
2000-25-00400-1000-010000	OSPP50000001000000000000	CMD06-2	TE18LRCF
2000-25-00405-0000-000000	OSPP50000001000000000000	CMD06-2	TE18LRCFX
2000-25-00405-0000-000000	OSPP50000001000000200000	CMD07-1B	TE18LRMS
2000-25-00430-0000-000000	OSPP50000001000000200000	CMD07-1B	TE20SRCF
2000-25-00430-0000-000000	OSPP50000001000000700000	CMD08-2	TE22LR71
2000-25-00450-0000-000000	OSPP50000001000000700000	CMD08-2	TE22LRCF
2000-25-00450-0000-000000	OSPP50000001000000800000	CMD09-2B	TE22LRCFX
2000-25-00470-0000-000000	OSPP50000001000000800000	CMD09-2B	TE22LRMS
2000-25-00470-0000-000000	OSPP50000001000001000000	CMD10-2	TE25SR71
2000-25-00475-0000-000000	OSPP50000001000001000000	CMD10-2	TE25SRCF
2000-25-00475-0000-000000	OSPP50000001000005000000	CMD12-2	TE25SRCFX
2000-25-00476-0000-000000	OSPP50000001000005000000	CMD12-2	TE28LR71
2000-25-00476-0000-000000	OSPP50000001050000000000	CMDG1-1	TE28LR71X
2000-25-00500-0000-000000	OSPP50000001050000000000	CMDG1-1	TE28LRCF
2000-25-00500-0000-000000	OSPP50000001050000200000	CN44010-316	TE28LRCFX
2000-25-00525-0000-000000	OSPP50000001050000200000	CN44012-304	TE2PMK4-6
2000-25-00525-0000-000000	OSPP50000001080000000000	CN44012-316	TE30SRCF
2000-25-00540-0000-000000	OSPP50000001080000000000	CN44012-316SOG	TE35LR71
2000-25-00540-0000-000000	OSPP50000001100000000000	CN4402-304	TE35LRCF
2000-25-00550-0000-000000	OSPP50000001100000000000	CN4402-316	TE35LRCFX
2000-25-00550-0000-000000	OSPP50000001100000200000	CN4402-316SOG	TE38SRCF
2000-25-00550-0101-000000	OSPP50000001100000200000	CN4403-304	TE42LM71
2000-25-00550-0101-000000	OSPP50000001100000800000	CN4403-316	TE42LRCF
2000-25-00576-0000-000000	OSPP50000001100000800000	CN4403-316SOG	TE42LRCFX
2000-25-00576-0000-000000	OSPP500000001100000A00000	CN4404-304	TEA025EW09A2NLWJ
2000-25-00580-0000-000000	OSPP500000001100000A00000	CN4404-316	TEA025EW09A2NXWJ
2000-25-00580-0000-000000	OSPP500000001100000H00000	CN4404-316SOG	TEA025EW09B2NLWJ
2000-25-00600-0000-000000	OSPP500000001100000H00000	CN4406-316	TEA025EW09B2NXWJ
2000-25-00600-0000-000000	OSPP50000000112500001I00000	CN4406-316SOG	TEA032EW09A2NLWJ
2000-25-00650-0000-000000	OSPP50000000112500001I00000	CN4407-316	TEA032EW09A2NXWJ
2000-25-00650-0000-000000	OSPP50000001125100000000	CN4408-304	TEA032EW09B2NLWJ
2000-25-00650-1000-000000	OSPP50000001125100000000	CN4408-316	TEA032EW09B2NXWJ
2000-25-00650-1000-000000	OSPP50000001150000000000	CN4408-316SOG	TEA032EW09B2VXWJ
2000-25-00670-0000-000000	OSPP50000001150000000000	CN55010-316	TEA040EW09A2NLWJ
2000-25-00670-0000-000000	OSPP500000001150003A00000	CN55012-316	TEA040EW09B2NLWJ
2000-25-00675-0000-000000	OSPP500000001150003A00000	CN5504-316	TEA040EW09B2NXWJ
2000-25-00675-0000-000000	OSPP50000001200000000000	CN5506-316	TEA040EW09B2VLWJ
2000-25-00676-0000-000000	OSPP50000001200000000000	CN5508-316	TEA040EW09B2VXWJ
2000-25-00676-0000-000000	OSPP500000001200000B00000	CN66010-316	TEA050EW09A2NLWJ
2000-25-00680-0000-000000	OSPP500000001200000B00000	CN66012-316	TEA050EW09A2NXWJ
2000-25-00680-0000-000000	OSPP50000001200001000000	CN6603-304	TEA050EW09B2NLWJ
2000-25-00700-0000-000000	OSPP50000001200001000000	CN6603-316	TEA050EW09B2NLWU
2000-25-00700-0000-000000	OSPP50000001200004000000	CN6603-316SOG	TEA050EW09B2NXWJ
2000-25-00800-0000-000000	OSPP50000001200004000000	CN6604-304	TEA050EW09B2NXWJXG011
2000-25-00800-0000-000000	OSPP50000001200005000000	CN6604-316	TEA050EW09B2VLWJ
2000-25-00820-0000-000000	OSPP50000001200005000000	CN6604-316SOG	TEA050EW09B2VXWJ

2000-25-00820-0000-000000	OSPP50000000120010000000	CN6606-304	TEA063EW09A2NLWJ
2000-25-00850-0000-000000	OSPP50000000120010000000	CN6606-316	TEA063EW09B2NLWJ
2000-25-00850-0000-000000	OSPP50000000122000000000	CN6608-304	TEA063EW09B2NLWJX824
2000-25-00950-0000-000000	OSPP50000000122000000000	CN6608-316	TEA063EW09B2NXWJ
2000-25-00950-0000-000000	OSPP50000000124000000000	CN99010-316	TEA063EW09B2NXWJX793
2000-25-01000-0000-000000	OSPP50000000124000000000	CN99010-316SOG	TEA063EW09B2VLWJ
2000-25-01000-0000-000000	OSPP50000000125000000000	CN99012-316	TEA080EW09A2NXWJ
2000-25-01050-0000-000000	OSPP50000000125000000000	CN99012-316SOG	TEA080EW09B2NLWJ
2000-25-01050-0000-000000	OSPP50000000125000500000	CN9904-304	TEA080EW09B2NLWJX683
2000-25-01070-0000-000000	OSPP50000000125000500000	CN9904-316	TEA080EW09B2NLWJX824
2000-25-01070-0000-000000	OSPP50000000130000000000	CN9904-316SOG	TEA080EW09B2NXWJ
2000-25-01200-0000-000000	OSPP50000000130000000000	CN9906-316	TEA100EW09A2NLWJ
2000-25-01200-0000-000000	OSPP50000000130000000F000	CN9906-316SOG	TEA100EW09A2NXWJ
2000-25-01450-0000-000000	OSPP50000000130000000F000	CN9908-316	TEA100EW09B2NLWJ
2000-25-01450-0000-000000	OSPP50000000130000800000	CN9908-316SOG	TEA100EW09B2NLWJX683
2000-25-01500-0000-000000	OSPP50000000130000800000	CNLX12010-316	TEA100EW09B2NXWJ
2000-25-01500-0000-000000	OSPP50000000130000300000	CNLX12012-316	TEA100EW09B2NXWJX683
2000-25-01600-0000-000000	OSPP50000000130000300000	CNLX1206-316	TEANB497E70LAF
2000-25-01600-0000-000000	OSPP50000000132000040000	CNLX1208-316	TEANV1007P10LA
2000-25-01625-0000-030000	OSPP50000000132000040000	CNLX16010-316	TEANV1007P10MA
2000-25-01625-0000-030000	OSPP50000000135000000000	CNLX16012-316	TEANV1007P10MAX29
2000-25-01700-0000-000000	OSPP50000000135000000000	CNLX1606-316	TEAPV1007P04LA
2000-25-01700-0000-000000	OSPP50000000140000000000	CNLX1608-316	TEAPV1007P04MA
2000-25-01750-0000-000000	OSPP50000000140000000000	CNLX24010-316	TEE06L7/16UNFOMDCF
2000-25-01750-0000-000000	OSPP50000000140000000F000	CNLX24012-316	TEE06LMOMDCF
2000-25-01800-0000-000000	OSPP50000000140000000F000	CNLX2406-316	TEE06LMOROMDCF
2000-25-01800-0000-000000	OSPP50000000140000200000	CNLX99010-316	TEE06LRCF
2000-25-01820-0000-000000	OSPP50000000140000200000	CNLX99012-316	TEE06LROMDCF
2000-25-01820-0000-000000	OSPP500000001400000D00000	CNLX9904-316	TEE06SROMDCF
2000-25-01860-1000-000000	OSPP500000001400000D00000	CNLX9906-316	TEE06ZLRCF
2000-25-01860-1000-000000	OSPP500000001400000H00000	CNLX9908-316	TEE08L7/16UNFCF
2000-25-01950-0000-000000	OSPP500000001400000H00000	CNR1/4	TEE08LMOMDCF
2000-25-01950-0000-000000	OSPP50000000140000100000	CNR1/4	TEE08LRCF
2000-25-02120-0000-000000	OSPP50000000140000100000	CNRC1/2-20	TEE08LROMDCF
2000-25-02120-0000-000000	OSPP50000000140000500000	CNRC1/2-20	TEE08SROMDCF
2000-25-02500-0000-000000	OSPP50000000140000500000	CNRP1/4	TEE08ZLRCF
2000-25-02500-0000-000000	OSPP50000000141000000000	CNRP1/4	TEE10L9/16UNFCF
2000-25-02650-0000-000000	OSPP50000000141000000000	CNRP1/8	TEE10L9/16UNFOMDCF
2000-25-02650-0000-000000	OSPP50000000145000000000	CNRP1/8	TEE10LMOMDCF
2000-25-02800-0000-000000	OSPP50000000145000000000	CNX12010-316	TEE10LMOROMDCF
2000-25-02800-0000-000000	OSPP50000000150000000000	CNX12012-316	TEE10LRBOMD71
2000-25-02900-0000-000000	OSPP50000000150000000000	CNX1204-316	TEE10LRCF
2000-25-02900-0000-000000	OSPP50000000150000200000	CNX1206-316	TEE10LROMDCF
2000-25-04200-0100-000000	OSPP50000000150000200000	CNX1208-316	TEE10LRVITOMDCF
2000-25-04200-0100-000000	OSPP50000000150000800000	CNX16010-316	TEE10SMCF
2000-25-04400-0000-000000	OSPP50000000150000800000	CNX16012-316	TEE10SROMDCF
2000-25-04400-0000-000000	OSPP500000001500000B00000	CNX1606-316	TEE10ZLRCF
20-002SS	OSPP500000001500000B00000	CNX1606-316SG10	TEE10ZSRCF
200030R0141	OSPP500000001500000D00000	CNX1606-316SOG	TEE12L3/4UNFCF
200044R4008	OSPP500000001500000D00000	CNX1606-316SOG10	TEE12L3/4UNFOMDCF
200049R0004	OSPP50000000150000400000	CNX1608-316	TEE12LMOMDCF
200049R0091	OSPP50000000150000400000	CNX1608-316SOG	TEE12LMORCF
20005FIL	OSPP50000000150000500000	CNX44010-316	TEE12LRBOMD71

20005FIL	OSPP500000001500005000000	CNX44012-316	TEE12LRCF
20006FIL	OSPP500000001550000000000	CNX4402-316	TEE12LROMDCF
20006FIL	OSPP500000001550000000000	CNX4402316E1648	TEE12SMOMDCF
20007FIL	OSPP500000001550004000000	CNX4403-316	TEE12SRCF
20007FIL	OSPP500000001550004000000	CNX4404-316	TEE12SROMDCF
20008FIL	OSPP500000001600000000000	CNX4406-316	TEE12ZL9/16UNFCF
20008FIL	OSPP500000001600000000000	CNX4408-316	TEE12ZLMNBR71
20008FIL	OSPP500000001600000800000	CNX66010-316	TEE12ZLRCF
20008FIL	OSPP500000001600000800000	CNX66012-316	TEE12ZSRCF
20009-01	OSPP500000001600000808000	CNX6603-316	TEE15L7/8UNFOMDCF
20009FIL	OSPP500000001600000808000	CNX6604-316	TEE15LMOMDCF
20009FIL	OSPP500000001625004000000	CNX6606-316	TEE15LRCF
2000PM-OR	OSPP500000001625004000000	CNX6606-316SOG	TEE15LROMDCF
2000SM-OR	OSPP500000001650000000000	CNX6606-ESR1648	TEE15ZLRCF
2000-VALVE	OSPP500000001650000000000	CNX6608-316	TEE16SRCF
2000-VALVE	OSPP500000001650005000000	CNX99010-316	TEE16SROMDCF
20010 RV	OSPP500000001650005000000	CNX99012-304	TEE16ZSRCF
20010 RV	OSPP500000001700000000000	CNX99012-316	TEE18L11/16UNOMDCF
20010 RVUV	OSPP500000001700000000000	CNX9903-316	TEE18LMOROMDCF
20010 RVUV	OSPP500000001700000800000	CNX9904-316	TEE18LRCF
20010 UV	OSPP500000001700000800000	CNX9904-316SG10	TEE18LROMDCF
20010 UV	OSPP500000001700005000000	CNX9904-316SOG	TEE18ZLRCF
20010 V	OSPP500000001700005000000	CNX9905-316	TEE20S11/16UNCF
20010 V	OSPP500000001720000000000	CNX9906-316	TEE20SRCF
20010 VUV	OSPP500000001720000000000	CNX9906-316SG10	TEE20SROMDCF
20010 VUV	OSPP500000001750000000000	CNX9908-316	TEE20ZSRCF
20010FIL	OSPP500000001750000000000	CO055192	TEE22LM27X2ORVOMDCF
20010FIL	OSPP50000000175000000F000	CO055193	TEE22LRCF
20010-QC	OSPP50000000175000000F000	CO055253	TEE22LROMDCF
20010-QC	OSPP500000001750000H00000	CO055255	TEE22ZLRCF
20011-04	OSPP500000001750000H00000	CO055930	TEE25SRCF
20015-00145	OSPP500000001750000H0F000	CO055931	TEE25SROMDCF
20015-00145	OSPP500000001750000H0F000	CO056935	TEE28LRCF
20015-00220	OSPP500000001750001000000	CO057283	TEE28LROMDCF
20015-00220	OSPP500000001750001000000	CO057284	TEE28ZLRCF
20015-00400	OSPP500000001800000000000	CO057776	TEE30SROMDCF
20015-00400	OSPP500000001800000000000	CO057960	TEE30SRVITOMDCF
20015-00500	OSPP500000001800000D00000	CO356413	TEE35LROMDCF
20015-00500	OSPP500000001800000D00000	CO356417	TEE35LRVITOMDCF
20015-00600	OSPP500000001850000000000	CO387886	TEE35ZLRCF
20015-00600	OSPP500000001850000000000	CO389062	TEE38SROMDCF
20015-01000	OSPP500000001920000000000	CO389113	TEE42LRCF
20015-01000	OSPP500000001920000000000	CO389114	TEE42LROMDCF
20015-01200	OSPP500000002000000000000	CO389115	TEE42ZLRCF
20015-01200	OSPP500000002000000000000	CO389936U401	TEH025EL09B2NWG
20015-01215	OSPP500000002050000000000	CO389936U402	TEH025EL09B2NWJ
20015-01215	OSPP500000002050000000000	CO389936U403	TEH032EL09B2NWJ
20015-01300	OSPP500000002100000000000	CO463367	TEH040EL09A2NWJ
20015-01300	OSPP500000002100000000000	CO465188U105	TEH040EL09B2NWJ
20015-01403	OSPP50000000217000000F000	CO466448U015	TEH050EL09A2NWJ
20015-01403	OSPP50000000217000000F000	CO466448U040	TEH050EL09B2NWJ
20015-01500	OSPP500000002200000000000	CO466448U070	TEH050EL09B2NWU
20015-01500	OSPP500000002200000000000	CO466448U110	TEH063EL09A2NWJ

20015-02200	OSPP500000002300000000000	CO466448U165	TEH063EL09B2NWJ
20015-02200	OSPP500000002300000000000	CO466449U015	TEH063EL09B2NWU
20015-QC	OSPP500000002300000600000	CO466449U040	TEH100EL09A2NWJ
20015-QC	OSPP500000002300000600000	CO466449U070	TEH100EL09B2NWJ
20016-00250	OSPP500000002300000H0F000	CO466449U110	TELTEC-WELL500-062-3.94
20016-00250	OSPP500000002300000H0F000	CO466449U165	TELTEC-WELL500-062-4.27
20017-00650	OSPP500000002300005000000	CO466636	TELTEC-WELL500-062-5.0
20017-00650	OSPP500000002300005000000	CO466709U038	TELTEC-WELL500-062-98.5
20017-00700	OSPP500000002310000B00000	CO466709U050	TELTEC-WELL500-062VI
20017-00700	OSPP500000002310000B00000	CO466709U073	TELTEC-WELL750-062-3.94
2001X-05	OSPP500000002350000000000	CO466709U083	TELTEC-WELL750-062-4.27
20020 RUV	OSPP500000002350000000000	CO466737	TELTEC-WELL750-062-5.0
20020 RUV	OSPP500000002350005000000	CO467842U020	TELTEC-WELL750-062-5.25
20020 RV	OSPP500000002350005000000	CO468325U018	TELTEC-WELL750-062-600MM
20020 RV	OSPP500000002400005000000	CO468325U055	TELTEC-WELL750-062VI
20020 UV	OSPP500000002400005000000	CO468325U110	TEPB4-6
20020 UV	OSPP500000002500000000000	CO468325U315	TF0080EN460AAAB
20020 V	OSPP500000002500000000000	CO468326U018	TF0080EW260AAAB
20020 V	OSPP500000002600000000000	CO468326U055	TF0080EW260AABM
20020-QC	OSPP500000002600000000000	CO468326U110	TF0080EW260BBBF
20020-QC	OSPP500000002800000H00000	CO468326U315	TF0080EW260FSAB
20024FIL	OSPP500000002800000H00000	CO469299	TF0080EW410AAAB
20024FIL	OSPP500000002850000000000	CO469334	TF0080EW460AAAB
20025FIL	OSPP500000002850000000000	CO470653	TF0080EW460AAAH
20025FIL	OSPP500000003050000000000	CO471265	TF0080EW470AAAB
20025-QC	OSPP500000003050000000000	CODESYS V3 MOTION RTE	TF0080HV080AAAB
20025-QC	OSPP500000003400000000000	COL1422	TF0080HV260AAAB
20026FIL	OSPP500000003400000000000	CONENC82M	TF0080HV260LABB
20026FIL	OSPP500000004000000200000	CONMOT10508	TF0080HV450AAAB
20027FIL	OSPP500000004000000200000	CONMOT105F	TF0080HV450LABB
20027FIL	OSPP500000004000100H00000	CONMOT105M	TF0080HW080AABP
20028FIL	OSPP500000004000100H00000	CONMOT14508	TF0080HW260AAAB
20028FIL	OSPP500000004200000I00000	CONMOT145F	TF0080HW460AAAB
2002-VALVE	OSPP500000004200000I00000	CONMOT145M	TF0080HX460AAAB
2002-VALVE	OSPP500000004950000000000	CONMOT205F	TF0080MV280AAAB
20033-00400	OSPP500000004950000000000	CONMOT205M	TF0080MV470AAAB
20033-00400	OSPP500000005350000000000	CONMOT6F	TF0080MV470BBBF
20033-00700	OSPP500000005350000000000	CONMOT82F	TF0080MW080AAAB
20033-00700	OSPP500000005350000000F000	CONMOT82M	TF0080MW260AAAB
20033-00750	OSPP500000005350000000F000	CONRES08	TF0080VL441AAAB
20033-00750	OSPP500000006000000000000	CONRES105F	TF0080VX260AAAB
20033-01900	OSPP500000006000000000000	CONRES105M	TF0080VX460AAAB
20033-01900	OSPP500000100100000000000	CONRES12F	TF0080VY460AAAB
20-034	OSPP500000100100000000000	CONRES82F	TF0100AM050AAAA
20034-00500	OSPP500000100225000A00000	CONRES82M	TF0100EN260AAAB
20034-00500	OSPP500000100225000A00000	CONVENT105F	TF0100EN260HAAX
20034-00800	OSPP500000100400000000000	COR4BMB16-1/2	TF0100EN410AAAB
20034-00800	OSPP500000100400000000000	COR4BMB4-1/8	TF0100EN410AABK
20034-01930	OSPP500000100600000000000	COR4BMB6-1/4	TF0100EN450AAAB
20034-01930	OSPP500000100600000000000	COR4BMB8-1/4	TF0100EN460AAAB
20034FIL	OSPP500000100700000000000	COR4BPL4/6-1/4	TF0100EW260AAAB
20034FIL	OSPP500000100700000000000	COR4BPL4/6-1/8	TF0100EW261LAAY
20035-01300	OSPP500000100700000000F000	COR4BPL6/8-1/4	TF0100EW410AAAB

20035-01300	OSPP50000010070000000F000	COR4BPL6/8-1/8	TF0100EW440AAAB
20037FIL	OSPP50000101100000000000	COR4BRAB8-1/4	TF0100EW450AAAB
20037FIL	OSPP50000101100000000000	COR4PB4-1/8	TF0100EW460AAAB
20-038	OSPP50000101700000000000	COR4PB6-1/4	TF0100EW470AAAB
20038FIL	OSPP50000101700000000000	COR4PB6-1/8	TF0100HV260LABB
20038FIL	OSPP50000100011000000000	COR4PB8-1/4	TF0100HV450LABB
20039FIL	OSPP50000100011000000000	COR4PB8-1/8	TF0100HV460AAAB
20039FIL	OSPP50000100012500000000	COR8PB4M5	TF0100HV460LABB
2003U10 01	OSPP50000100012500000000	COR8PB6M10	TF0100HW260AAAB
2003U10 02	OSPP50000100013500000000	COR8PB6M12	TF0100HW460AAAB
2003U10 03	OSPP50000100013500000000	CORG-10	TF0100MV080AAAB
2003U10 04	OSPP500001000160000B00000	CORG-12	TF0100MV260AAAB
2003U10 05	OSPP500001000160000B00000	CORG-16	TF0100MV450AAAB
2003U10 06	OSPP500001000170060D00000	CORG-20	TF0100MV460AABK
2003U10R01	OSPP500001000170060D00000	CORG-24	TF0100MV470AAAB
2003U10R04	OSPP500001000260000B00000	CORG-32	TF0100MW260AAAB
2003U10R08	OSPP500001000260000B00000	CORG-4	TF0100MW460AAAB
2003-VALVE	OSPP50000100026200000000	CORG-6	TF0100MW470AAAB
2003-VALVE	OSPP50000100026200000000	CORG-8	TF0100VL441AAAB
20040FIL	OSPP50000100030000000000	CORPB4-10	TF0100VX260AAAB
20040FIL	OSPP50000100030000000000	CORPB4-5	TF0100VX440AAAB
20-050	OSPP500001000300060D00000	CORPB6-10	TF0100VX460AAAB
20051-12	OSPP500001000300060D00000	CORPB6-13	TF0100VY460AAAB
20051-3	OSPP50000100040000100000X	CORPB8-10	TF0130EN260AAAB
20051-4	OSPP50000100040000100000X	CORPB8-13	TF0130EN260HAAU
20051-5	OSPP50000100049001000000	CP*OEM750X-10436	TF0130EN410AAAB
20051-6	OSPP50000100049001000000	CP*OEM750X-12110	TF0130EN411AAAH
20051-8	OSPP50000100049000100000Y	CP016C07S00N	TF0130EN450AAAB
20053-4	OSPP50000100049000100000Y	CP016C07U00N	TF0130EN460AAAB
2005P04C00	OSPP50000100050000000000	CP025C07N00V	TF0130EW260AAAB
2005P04C00 27	OSPP50000100050000000000	CP025C07N99N	TF0130EW410AAAB
2005P04C01	OSPP50000100060000000000	CP025C07S00N	TF0130EW411AAAH
2005P04C01 27	OSPP50000100060000000000	CP025C07S11N	TF0130EW440AAAB
2005P04C04	OSPP500001000600060D00000	CP025C07U00N	TF0130EW460AAAB
2005P04C04 27	OSPP500001000600060D00000	CP025C07U11N	TF0130HV080AABP
2005P06C01	OSPP50000100065000000000	CP032C07S00N	TF0130HV440AAAB
2005P06C04	OSPP50000100065000000000	CP032C07S12N	TF0130HV450AAAB
2005P08 00	OSPP50000100067000000000	CP032S07S09V	TF0130HV460AAAB
2005P08 01	OSPP50000100067000000000	CP032S07U00N	TF0130HV470AAAB
2005P08 02	OSPP50000100070000000000	CP040C07S00N	TF0130HW260AAAB
2005P08 03	OSPP50000100070000000000	CP040C07S13N	TF0130HX080AABP
2005P08 04	OSPP500001000700000A00000	CP050C07S00N	TF0130MN470AAAB
2005P08 05	OSPP500001000700000A00000	CP050C07S14N	TF0130MV260AAAB
2005P08 06	OSPP50000100074000000000	CP050C07U00N	TF0130MV440AAAB
2005P08C00	OSPP50000100074000000000	CP050S07S14N	TF0130MW080AAAB
2005P08C01	OSPP50000100075000000000	CP063C07S00N	TF0130MW260AAAB
2005P08C04	OSPP50000100075000000000	CP063C07S14N	TF0130VX460AAAB
2005P08R00	OSPP50000100077000000000	CP063S07S14N	TF0140EN260AAAA
2005P08R01	OSPP50000100077000000000	CP100208	TF0140EW260AAAB
2005P08R02	OSPP50000100078000000000	CP100338	TF0140EW410AAAB
2005P08R03	OSPP50000100078000000000	CP102427	TF0140EW450AAAB
2005P08R04	OSPP50000100080000000000	CP103676	TF0140EW460AAAB
2005P10 00	OSPP50000100080000000000	CP104144	TF0140MW450AAAB

2005P10 01	OSPP500001000825000000000	CP104243	TF0140VX460AAAB
2005P10 02	OSPP500001000825000000000	CP105803	TF0170EN260AAAB
2005P10 03	OSPP500001000900000000000	CP106814	TF0170EN450HAAX
2005P10 04	OSPP500001000900000000000	CP108023	TF0170EW080AAAB
2005P10 05	OSPP500001000950000000000	CP108441	TF0170EW260AAAA
2005P10 06	OSPP500001000950000000000	CP1200S40M	TF0170EW260AAAB
2005P10C00	OSPP500001001000000000000	CP1200S5M	TF0170EW260FSAB
2005P10C01	OSPP500001001000000000000	CP12P5ONM301561S	TF0170EW260FSBG
2005P10C04	OSPP500001001000000200000	CP200017	TF0170EW261LAAY
2005P10R00	OSPP500001001000000200000	CP-3	TF0170EW410AAAB
2005P10R01	OSPP500001001085000000000	CP300035	TF0170EW450AAAB
2005P10R02	OSPP500001001085000000000	CP40	TF0170EW460AAAB
2005P10R03	OSPP500001001200000000000	CP40-316SOG	TF0170EW460FSAB
2005P10R04	OSPP500001001200000000000	CP50	TF0170EY261LAAY
2005U08 01	OSPP500001001350000000000	CP60	TF0170HK260AAAB
2005U08 02	OSPP500001001350000000000	CP600S40M	TF0170HV460AAAB
2005U08 03	OSPP500001001400000000000	CP600S5M	TF0170HW260AAAB
2005U08 04	OSPP500001001400000000000	CP60-316SOG	TF0170HW460AAAB
2005U08 05	OSPP500004000350000204000	CP90	TF0170MV450AAAB
2005U08 06	OSPP500004000350000204000	CP90-316SOG	TF0170VX460AAAB
2005U08R01	OSPP500004000350000404000	CPB4400	TF0170VX460LAAY
2005U08R04	OSPP500004000350000404000	CPB8800	TF0170VY460AAAB
2005U08R08	OSPP500004000450000404000	CPBSWVE12LM307933CF	TF0195EA260AAAB
2005U10 04	OSPP500004000450000404000	CPC101P	TF0195EN260AAAB
20092FIL	OSPP500004000500000400000	CPC5OMLO301510S	TF0195EN410AAAB
20092FIL	OSPP500004000500000400000	CPD084P	TF0195EN410AAFG
20092FIL	OSPP500004000500000404000	CPDA12LOR307771CF	TF0195EN410AAKA
20092FIL	OSPP500004000500000404000	CPF42EDMLO301621S	TF0195EN460AAAB
20093FIL	OSPP500004000600000404000	CPF42EDMLO301622S	TF0195EN460HAAU
20093FIL	OSPP500004000600000404000	CPFF87OMLO104392S	TF0195EN460HAAX
20094FIL	OSPP500004000650000204000	CPGE06LM307858CF	TF0195EN470AAAB
20094FIL	OSPP500004000650000204000	CPGE10LRD307887CF	TF0195EV470AAAB
20095FIL	OSPP500004000900000204000	CPGE15LR307813CF	TF0195EW080AABP
20095FIL	OSPP500004000900000204000	CPH104P	TF0195EW260AAAA
20096FIL	OSPP500010000300000600000	CPHMLO300071CF	TF0195EW260AAAB
20096FIL	OSPP500010000300000600000	CPIFF-2P-15	TF0195EW260BBBN
20097FIL	OSPP500010000580701000000	CPIFF-2P-5	TF0195EW410AAAB
20097FIL	OSPP500010000580701000000	CPIFF-3P-5	TF0195EW440AAAB
20098FIL	OSPP500010000580801000000	CPIFF-3RP-15	TF0195EW450AAAB
20098FIL	OSPP500010000580801000000	CPIFF-4P-15	TF0195EW460AAAB
20099FIL	OSPP500010000600000000000	CPIFF-6P-25	TF0195EW460BBBN
20099FIL	OSPP500010000600000000000	CPIFF-6P-5	TF0195EW461AAAB
2009FIL	OSPP500010000600000B00000	CPIFF-6RP-15	TF0195EW461AAAH
2009FIL	OSPP500010000600000B00000	CPIFF-6RP-25	TF0195EW470AAAB
200AF-025	OSPP500010000750000000000	CPIFF-6RP-5	TF0195EY260AAAB
200AF-04	OSPP500010000750000000000	CPIFF-8P-5	TF0195GS080AATN
200AF-05	OSPP500010000900000600000	CPIFF-8P-5A	TF0195HK410AAKA
200AF-06	OSPP500010000900000600000	CPIFF-8RP-5	TF0195HK410AAXD
200BF-025	OSPP500010001000000000000	CPIFF-8S-5	TF0195HK410HAAH
200BF-04	OSPP500010001000000000000	CPO12	TF0195HK461AAAB
200BF-05	OSPP500010001100000000000	CPO12-TO	TF0195HV080AAAA
20-1 1/4 F5OG-S	OSPP500010001100000000000	CPO4400	TF0195HV080AAAB
20-102	OSPP500010001450000000000	CPO4400-TO	TF0195HV080AABP

20-10-20JMTXS	OSPP500010001450000000000	CPO6600	TF0195HV081AAAB
2010-5583	OSPP500010001500000000000	CPO6600-TO	TF0195HV260AAAB
2010-5686	OSPP500010001500000000000	CPO880	TF0195HV450AAAB
201-06001-0	OSPP500010001540000000000	CPO8800-TO	TF0195HW080AAAB
2010-6184	OSPP500010001540000000000	CPOM2AA25V	TF0195HW080AABP
2010-6281	OSPP500010001700000000000	CPOM2AA50V	TF0195HW080AAFX
2010-6452	OSPP500010001700000000000	CPOM2AA70V	TF0195HW260AAAB
2010-6453	OSPP500010001860000000000	CPOM2AAHTV	TF0195HW260AABK
2010-6453-DA	OSPP500010001860000000000	CPOM2AAV	TF0195HW410BBBN
2010-6453-YB	OSPP500010002050000000000	CPOM2BB25V	TF0195HW450AAAA
2010-6454	OSPP500010002050000000000	CPOM2BB50V	TF0195HW450AAAB
2010-6455	OSPP500010002100000000000	CPOM2BB70V	TF0195HW450AABK
2010-6456	OSPP500010002100000000000	CPOM2BBHTV	TF0195HY460AAAB
2010-6456-D	OSPP500010002150000000000	CPOM2BBV	TF0195MS070AAAB
2010-6456-DA	OSPP500010002150000000000	CPOM2DD25V	TF0195MV080AABP
2010-6456-YB	OSPP500010002200000000000	CPOM2DD50V	TF0195MV081AAAB
2010-6457	OSPP500010002200000000000	CPOM2DD70V	TF0195MV260AAAB
2010-6485	OSPP50001000250000000F000	CPOM2DDHTV	TF0195MV410AAAB
2010-6922	OSPP50001000250000000F000	CPOM2DDV	TF0195MV440AAAB
2010-7035	OSPP500010003210000600000	CPOM2DDVX309X692	TF0195MV450AAAB
2010-7036	OSPP500010003210000600000	CPOM2DDVX893	TF0195MV470AAAB
2010-7037	OSPP500012001300000400000	CPOM2DDVXG048	TF0195MV470AABK
2010-7245	OSPP500012001300000400000	CPOM2DDVXG227	TF0195MW080AAAB
2010-7823	OSPP500012100650000204000	CPOM3AAV	TF0195MW260AAAB
2010-7844	OSPP500012100650000204000	CPOM3BBHTV	TF0195MW410AAAB
201-08001-0	OSPP500100000500000000000	CPOM3BBV	TF0195MW450AAAB
2010FIL	OSPP500100000500000000000	CPOM3DDHTV	TF0195MW460AAAB
2010FIL	OSPP500100000650000000000	CPOM3DDV	TF0195MW470AAAB
2010H-025V00	OSPP500100000650000000000	CPOM4AAHTV	TF0195MW470BBBJ
2010N-016V30	OSPP500100000750000000000	CPOM4BBHTV	TF0195VX460AAAB
2010P04 00 27	OSPP500100000750000000000	CPOM4DDHTN	TF0240EB450AAAB
2010P04 01 27	OSPP500100000825000000000	CPOM4DDHTV	TF0240EN260AAAB
2010P04 02 27	OSPP500100000825000000000	CPOM6AAV	TF0240EN410AAAB
2010P04 03 27	OSPP500100000840000000000	CPOM6BBN	TF0240EN460AAAB
2010P04 04 27	OSPP500100000840000000000	CPOM6BBV	TF0240EW260AAAB
2010P04 05 27	OSPP500100001000000000000	CPOM6DDN	TF0240EW260AAFA
2010P04 06 27	OSPP500100001000000000000	CPOM6DDV	TF0240EW410AAAB
2010P04C00	OSPP500100001150003A00000	CPR8OMLO108097S	TF0240EW440AAFX
2010P04C00 27	OSPP500100001150003A00000	CPRHD28L10B301781CF	TF0240EW460AAAB
2010P04C01	OSPP500100001200000000000	CPS1200S40M	TF0240HK460AAAB
2010P04C01 27	OSPP500100001200000000000	CPS1200S5M	TF0240HV080AAAB
2010P04C04	OSPP500100001400000000000	CPS1200S5MV	TF0240HV080AABP
2010P04C04 27	OSPP500100001400000000000	CPS600S40M	TF0240HV080LABU
2010P04R00	OSPP50010000165000000F000	CPS600S5M	TF0240HV440AAAB
2010P04R01	OSPP50010000165000000F000	CPS600S5MV	TF0240HV460AAAB
2010P04R02	OSPP500100001700000000000	CPSWVE10LR30786971	TF0240HW080AAAB
2010P04R03	OSPP500100001700000000000	CPVSTI1/4308002CF	TF0240HW460AAAB
2010P04R04	OSPP500101000300000000000	CPVSTI14105953CUAL	TF0240MV080AABP
2010P06 00	OSPP500101000300000000000	CPX120	TF0240MV410AAAB
2010P06 01	OSPP500101000500000000000	CPX120-25-4MO	TF0240MV450AAAB
2010P06 02	OSPP500101000500000000000	CPX120-316SOG	TF0240MV460AAAB
2010P06 03	OSPP500101000750000000000	CPX160	TF0240MW440AAAB
2010P06 04	OSPP500101000750000000000	CPX160-316SOG	TF0240MW470AAAB

2010P06 05	OSPP500101101025000000000	CPX240	TF0240VB080AAAB
2010P06 06	OSPP500101101025000000000	CPX40	TF0240VX460AAAB
2010P06C00	OSPP500200000340000000000	CPX40-316SOG	TF0240VY460AAAB
2010P06C01	OSPP500200000340000000000	CPX60	TF0280EN260AAAB
2010P06C04	OSPP500200000340001000000	CPX60-25-4MO	TF0280EN460AAAB
2010P06R00	OSPP500200000340001000000	CPX60-316SOG	TF0280EN460HAAX
2010P06R01	OSPP500200000380000000000	CPX60-ESR1648	TF0280EN470AAAB
2010P06R02	OSPP500200000380000000000	CPX60-IN625	TF0280EW260AAAB
2010P06R03	OSPP500200000800000000000	CPX90	TF0280EW410AAAB
2010P06R04	OSPP500200000800000000000	CPX90-316SOG	TF0280EW440AAAB
2010PM-OR	OSPP500200000910000000000	CPX90-WO	TF0280EW450AAAB
2010SM-OR	OSPP500200000910000000000	CQ100077	TF0280EW460AAAB
2010TM-OR	OSPP500200001000000600000	CR-25	TF0280EW461AAAB
20-10TRLOS	OSPP500200001000000600000	CRH3V	TF0280EW470AAAB
20-10TRTXS	OSPP500200001250000D0X000	CRK2	TF0280EY461AAAB
2010U04 01	OSPP500200001250000D0X000	CRN150	TF0280HK260AAAA
2010U04 02	OSPP500200002000000000000	CRN150	TF0280HV080AAAA
2010U04 03	OSPP500200002000000000000	CRN150-280-40-T	TF0280HV080AAAB
2010U04 04	OSPP500200101140000I00000	CRN150-280-40-T	TF0280HV080AABP
2010U04 05	OSPP500200101140000I00000	CRN150-90-45-T	TF0280HV260AAAB
2010U04 06	OSPP500201000150000000000	CRN150-90-45-T	TF0280HV410AAAB
2010U04R01	OSPP500201000150000000000	CRN300	TF0280HV450AAAB
2010U04R04	OSPP500201000150000200000	CRN300	TF0280HV460AAAB
2010U04R08	OSPP500201000150000200000	CRN50	TF0280HW080AAAB
2010U06 01	OSPP500201000250000200000	CRN50	TF0280HW450AAAB
2010U06 02	OSPP500201000250000200000	CRN50-180-45-T	TF0280HW460AAAB
2010U06 03	OSPP500201000350000000000	CRN50-180-45-T	TF0280MN470AABK
2010U06 04	OSPP500201000350000000000	CRP-16-012-000	TF0280MV080AABP
2010U06 05	OSPP500201000380000000000	CRP-16-012-000	TF0280MV410AAAB
2010U06 06	OSPP500201000380000000000	CRP-95-027	TF0280MV450AAAB
2010U06R01	OSPP500201000380001000000	CRP-95-027	TF0280MV460AAAB
2010U06R04	OSPP500201000380001000000	CRP-95-028	TF0280MV470AAAB
2010U06R08	OSPP500201000400000400000	CRP-95-028	TF0280MV470AABK
201-10	OSPP500201000400000400000	CRP-95-187	TF0280MW260AAAB
201-12	OSPP500201000500000400000	CRP-95-187	TF0280MW410AAAB
201-16	OSPP500201000500000400000	CS041BV	TF0280MW450AAAB
2-011-N552-9	OSPP500201000600000000000	CS06005N	TF0280MW460BBDP
2-011N552-90	OSPP500201000600000000000	CS06006N	TF0280MW470AAAB
2-011-V894-9	OSPP500201000830000000000	CS06008N	TF0280MY470AAAB
2-012	OSPP500201000830000000000	CS06013N	TF0280VX460AAAA
20-12 F5OG5-S	OSPP500201000850000000000	CS06015N	TF0280VX460AAAB
20-12 F5OX-S	OSPP500201000850000000000	CS06018N	TF0280VY460AAAB
20-12 RB-S	OSPP500201000950000000000	CS06023N	TF0360EN010AAAB
20-12 RB-SS	OSPP500201000950000000000	CS06040N	TF0360EN260AAAB
20-12 TRLO-S	OSPP500201001000000000000	CS06047N	TF0360EN460HAAU
20-12 TRTX-S	OSPP500201001000000000000	CS06049N	TF0360EW260AAAB
201-20	OSPP500201001200000000000	CS06069N	TF0360EW260BBBJ
201-24	OSPP500201001200000000000	CS06078N	TF0360EW450AAAB
20-12F42EDMLOS	OSPP500201001390000000000	CS06080N	TF0360EW460AAAB
20-12F42EDMLOSBPNB	OSPP500201001390000000000	CS06080V	TF0360EW460FSAN
20-12F42EDMXS	OSPP500201001500000000000	CS06082N	TF0360HK260AAAB
20-12F42EDMXSS	OSPP500201001500000000000	CS06086N	TF0360HV080AAAA
20-12F4OMXS	OSPP500201101025000000000	CS10009N	TF0360HV081AAAB

2012FIL	OSPP500201101025000000000	CS10011N	TF0360HW460AAAB
2012FIL	OSPP500210000800000000000	CS10019N	TF0360HY460AAAB
20-12HMK4S	OSPP500210000800000000000	CS10034N	TF0360MW260AAAB
20-12HMK4SS	OSPP500500000600000000000	CS10035N	TF0360MW450AAAB
20-12HMTXS	OSPP500500000600000000000	CS10046N	TF0360MW460AAAA
2-012-N552-9	OSPP500500000650000000000	CS10051N	TF0360MW460AAAB
2-012N552-90	OSPP500500000650000000000	CS10054N	TF0360US170AABB
20-12TRMTXSS	OSPP500500000750000000000	CS1200S	TF0360VX460AAAA
20-12TRTXS	OSPP500500000750000000000	CS1600S	TF0360VX460AAAB
2-012-V709-90	OSPP500500000850000000000	CS2017	TF0360VY460AAAB
2-012-V894-9	OSPP500500000850000000000	CS2UP1F1R0007	TF0365GS030AAAB
201-32	OSPP500500000980000000000	CS2UP1F1R0010	TF0365GS050AAAB
20137FIL	OSPP500500000980000000000	CS2UP1F1R0012	TF0405EB450AAAB
20137FIL	OSPP500601100520000000000	CS2UP1F1R0015	TF0405EN450AAAB
20137FIL	OSPP500601100520000000000	CS2UP1F1R0020	TF0405EN450HAAU
20137FIL	OSPP500601101025000000000	CS387462	TF0405EN460AAAB
20138FIL	OSPP500601101025000000000	CS400S65	TF0405EN460HAAU
20138FIL	OSPP50060110102500000X000	CS4600-1/2F	TF0405EW260AAAB
20139FIL	OSPP50060110102500000X000	CS4600-1/2F-CE	TF0405EW460AAAB
20139FIL	OSPP500A00000900000000000	CS4600-1/4A	TF0405HV080AABP
20139FIL	OSPP500A00000900000000000	CS4600-1/4A-CE	TF0405HW450AAAB
20139FIL	OSPP500A00000900005000000	CS4600-3/16F	TF0405HW460AAAB
2-013-N552-9	OSPP500A00000900005000000	CS465994U100	TF0405MV450AAAB
201-4	OSPP500A00001260001000000	CS466195U010	TF0405MW460BBDX
201-40	OSPP500A00001260001000000	CS466260U050	TF0405VX080AAAB
2-014-N552-9	OSPP500A00001700000000000	CS466260U140	TF0405VX080AABP
2-014N552-90	OSPP500A00001700000000000	CS466261U070	TF0405VX460AAAB
2-014-V894-9	OSPP500A00002350005000000	CS466261U100	TF0475EB460AAAB
201-5	OSPP500A00002350005000000	CS470407U010	TF0475EW260AAAB
20152FIL	OSPP500A00101275000000000	CS470407U030	TF0475EW441AAAB
20152FIL	OSPP500A00101275000000000	CS470407U040	TF0475HK440AAAB
20153-00400	OSPP500A00101275000H00000	CS470408U050	TF0475HW010BBBN
20153-00400	OSPP500A00101275000H00000	CS470408U080	TF0475HW080AAAB
20153-00420	OSPP500A01002700000000000	CS470408U125	TF0475HW081AAAB
20153-00420	OSPP500A01002700000000000	CS470408U200	TF0475MV450AAAB
20153-00475	OSPP500A01002700005000000	CS470408U800	TF0475VX460AAAB
20153-00475	OSPP500A01002700005000000	CS470445U050	TF0475VY460AAAB
20153-00570	OSPP500B00000900000000000	CS470469U060	TF1/219
20153-00570	OSPP500B00000900000000000	CS470469U150	TF1/2-3/8
20154FIL	OSPP500B00001100000000000	CS470469U200	TF1/4/100
20154FIL	OSPP500B00001100000000000	CS470956U020	TF1/4/150
20155FIL	OSPP501000000610000000000	CS481039	TF1/4/200
20155FIL	OSPP501000000610000000000	CS481079	TF1/4/50
20157FIL	OSPP501000000750100000000	CS481082	TF1/4-1/8
20157FIL	OSPP501000000750100000000	CS481083	TF1/410
20157FIL	OSPP501000001800000000000	CS481088	TF1/413
20157FIL	OSPP501000001800000000000	CS481099	TF1/8/100
20158FIL	OSPP506000000320000000000	CS4UA1F1R0005	TF1/8/150
20158FIL	OSPP506000000320000000000	CS4UA1F1R0010	TF1/8/200
20158FIL	OSPP506000000460000000000	CS4UP1F1R0005	TF1/8/50
20158FIL	OSPP506000000460000000000	CS4UP1F1R0010	TF1/810
20158FIL	OSPP506000000750000000000	CS4UV1F3R0010	TF10/120
20158FIL	OSPP506000000750000000000	CS4UV1F3R0020	TF10/240

20159FIL	OSPP50600000800000000000	CS4UV1F3R0030	TF124LOMDCF
20159FIL	OSPP50600000800000000000	CS4UV1F3R0050	TF13/150
201-6	OSPP50600000091000000000	CS600S	TF13/300
20-16 C5OLO-S	OSPP50600000091000000000	CS600S65	TF132LOMDCF
20-16 C5OX-S	OSPP50600000095000100000	CS600SV	TF132LOMDSS
20-16 CTX-S	OSPP50600000095000100000	CS6600-1/2F	TF140LOMDCF
20-16 F5OG5-S	OSPP50600000135000000000	CS6600-1/4A	TF140LOMDSS
20-16 F5OLO-S	OSPP50600000135000000000	CS6600-1/4A-CE	TF14-10
20-16 F5OX-S	OSPP50600000135000100000	CS6600-3/16F	TF148LOMDCF
20-16 FTX-S	OSPP50600000135000100000	CS6600-3/16F-CE	TF148LOMDSS
20-16 LOHL6-S	OSPP50600000160000000000	CS800S	TF164LOMDCF
20-16 MHN-SS	OSPP50600000160000000000	CS800S65	TF164LOMDSS
20-16 RA-SS	OSPP50600000190000000000	CS9600-1/2F	TF180LOMDCF
20-16 RB-SS	OSPP50600000190000000000	CS9600-1/4A	TF180LOMDSS
20-16 TL-S	OSPP50600000220020020000	CS9600-1/4A-CE	TF18-14
20-16 TRBU-S	OSPP50600000220020020000	CS9600-1/4AOP	TF196LOMDCF
20-16 TRLON-S	OSPP50600000260000000000	CS9600-1/4ASOG	TF24-16
20-16 TRTX-S	OSPP50600000260000000000	CS9600-3/16F	TF24CFX
20160FIL	OSPP50600010045000000000	CS9600-3/16F-CE	TF3/4-1/2
20160FIL	OSPP50600010045000000000	CSPH161P-16T	TF3/419
20161FIL	OSPP50600100160000000000	CSX4600-1/2F	TF3/8/100
20161FIL	OSPP50600100160000000000	CSX4600-1/2F-CE	TF3/8/150
20162FIL	OSPP50600110044000000000	CSX4600-1/4A	TF3/8/200
20162FIL	OSPP50600110044000000000	CSX4600-1/4A-CE	TF3/8-1/4
20163FIL	OSPP50601210155000000000	CSX4600-3/16F	TF3/810
20163FIL	OSPP50601210155000000000	CSX4600-3/16FCE	TF3/813
20163FIL	OSPP50610000050000000000	CSX6600-1/2F	TF32CFX
20163FIL	OSPP50610000050000000000	CSX6600-1/4A	TF32SSX
20164FIL	OSPP50610100100000000000	CSX6600-1/4A-CE	TF40CFX
20164FIL	OSPP50610100100000000000	CSX6600-1/4AOP	TF48CFX
20165FIL	OSPP50610110150000100000	CSX6600-3/16F	TFB0814
20165FIL	OSPP50610110150000100000	CSX9600-1/2F	TFB1016
20166FIL	OSPP50620000070000000000	CSX9600-1/2F-CE	TFB1318
20166FIL	OSPP50620000070000000000	CSX9600-1/4A	TFB2232
20167-00080	OSPP50620100025000020000	CSX9600-1/4A-CE	TFC1/2
20167-00080	OSPP50620100025000020000	CSX9600-1/4AOP	TFC1/4
20167-00650	OSPP50620100090000000000	CT1F	TFC14
20167-00650	OSPP50620100090000000000	CT1F	TFC16
20169FIL	OSPP50620100090000020000	CT1P	TFC24
20169FIL	OSPP50620100090000020000	CT1P	TFC3/4
20-16C3MXS	OSPP50620100100000000000	CT2F	TFC3/8
20-16C4OMLOS	OSPP50620100100000000000	CT2F	TFD1/2
20-16C4OMLOSS	OSPP50620100120000000000	CT2F6	TFD1/2-14
20-16C4OMXS	OSPP50620100120000000000	CT2F6	TFD1/2-16
20-16C4OMXSS	OSPP50620100150000000000	CT2P	TFD1/4
20-16CMTXS	OSPP50620100150000000000	CT2P	TFD14
20-16F3MXS	OSPP50620110150000100000	CT2PP	TFD14-1/4
20-16F42EDMLOS	OSPP50620110150000100000	CT2PP	TFD16
20-16F42EDMLOSS	OSPP50621210140000002000	CT-3L	TFD16-3/8
20-16F42EDMXS	OSPP50621210140000002000	CT-3L	TFD24-1/2
20-16F42EDMXSS	OSPP50C000000200070C00000	CT-3R	TFD3/4
20-16F4OMXS	OSPP50C000000200070C00000	CT-3R	TFD3/4-24
20-16F5OMLOS	OSPP50C000000300000000000	CT4440	TFD3/8

20-16F642EDMLS	OSPP50C000000300000000000	CT4440-PM.32	TFDE_THREADIDBOARD
20-16F642EDMXS	OSPP50C000000320000000000	CT4440-SOG	TFE10X1
20-16F642EDMXSS	OSPP50C000000320000000000	CT4440-SOGWO	TFE12X1
20-16F64OMXS	OSPP50C000000440000000000	CT464646	TFE4X1
20-16FMTXSS	OSPP50C000000440000000000	CT5550	TFE6X1
20-16HMK4S	OSPP50C000000450000000000	CT6660	TFE8X1
20-16HMK4SS	OSPP50C000000450000000000	CT6660-K	TFI1/410
20-16HMLOS	OSPP50C000000457000000000	CT6660-SOG	TFI1/413
20-16HMTXS	OSPP50C000000457000000000	CT6660-WO	TFI1/810
20-16HMTXSS	OSPP50C000000500000000000	CT6MP	TFI3/813
2-016-N552-9	OSPP50C000000500000000000	CT6MP	TFIM1410
2-016N552-90	OSPP50C000000540000000000	CT9990	TFIM1613
20-16TRMLONSS	OSPP50C000000540000000000	CT9990-K	TFK1510
20-16TRMTXSS	OSPP50C000000540000C00000	CT9990-SOG	TFK1610
20-16TRTXS	OSPP50C000000540000C00000	CT9990-SOGWO	TFK1810
2-016-V894-9	OSPP50C000000570100000000	CT-DST-1204-P	TFK1913
20-16XEMQ1CF	OSPP50C000000570100000000	CT-DST-1204-P	TFK2013
20-16XEMQ1SS	OSPP50C000000800000000000	CT-DST-1403-P	TFK2213
20-16XEMQ2CF	OSPP50C000000800000000000	CT-DST-1403-P	TFK2313
20-16XEMQ2SS	OSPP50C000000900000C00000	CTF-10-G1	TFK2919
20170FIL	OSPP50C000000900000C00000	CTF-10-G1	TFKM10
20170FIL	OSPP50C000001000000000000	CTF-30-G1	TFKM10B
20172FIL	OSPP50C000001000000000000	CTF-30-G1	TFKM10R
20172FIL	OSPP50C000001100000000000	CTF-30-G2	TFKM13
20173FIL	OSPP50C000001100000000000	CTF-30-G2	TFKM13B
20173FIL	OSPP50C000001150000000000	CTF-90-G2	TFKM13R
20174FIL	OSPP50C000001150000000000	CTF-90-G2	TFLM10
20174FIL	OSPP50C000001220000000000	CTFLB6	TFLM12
201-8	OSPP50C000001220000000000	CTFLB6	TFLM14
20183-00200	OSPP50C000001220000C00000	CTM-10-G1	TFLR1/2
20183-00200	OSPP50C000001220000C00000	CTM-10-G1	TFLR1/4
20183-00500	OSPP50C000001300000000000	CTM-10-M5	TFLR1/8
20183-00500	OSPP50C000001300000000000	CTM-10-M5	TFLR3/8
20186FIL	OSPP50C000001450000000000	CTM-10-M6	TFM1010
20186FIL	OSPP50C000001450000000000	CTM-10-M6	TFM1213
20187FIL	OSPP50C000001500000000000	CTM12C	TFM1413
20187FIL	OSPP50C000001500000000000	CTM12C-2	TFM1613
20188FIL	OSPP50C000001520000C00000	CTM16BXX	TFM2419
20188FIL	OSPP50C000001520000C00000	CTM16C	TFM810
20189FIL	OSPP50C000001600000000000	CTM16C-2	TFO10S
20189FIL	OSPP50C000001600000000000	CTM-30-G1	TFO13S
2-018-N552-9	OSPP50C000001600000C00000	CTM-30-G1	TFP100
2-018N552-90	OSPP50C000001600000C00000	CTM-30-G2	TFP100S_10
2-018-V894-9	OSPP50C000001620000C00000	CTM-30-G2	TFP100S_11
20191FIL	OSPP50C000001620000C00000	CTM-30-M6	TFP10B
20191FIL	OSPP50C000002500000000000	CTM-30-M6	TFP10R
20195-00250	OSPP50C000002500000000000	CTM4C	TFP10T
20195-00250	OSPP50C001100765000000000	CTM4C-2	TFP13B
20195-00500	OSPP50C001100765000000000	CTM5B	TFP13R
20195-00500	OSPP50C010002280000000000	CTM5C	TFP13T
20195-00600	OSPP50C010002280000000000	CTM5C-2	TFP19T
20195-00600	OSPP50C012000640000C00000	CTM6-B2-20IW6-016K	TFR1/2
20195-00610	OSPP50C012000640000C00000	CTM6-B2-20IW6-016K	TFR1/2C

20195-00610	OSPP50CA00000700000000000	CTM6-B2-2BIW6-016K	TFR1/4
20195-00650	OSPP50CA00000700000000000	CTM6-B2-2BIW6-016K	TFR1/4C
20195-00650	OSPP50CA00000860000000000	CTM6-B3-20IW4-016K	TFR1/8
20195-00900	OSPP50CA00000860000000000	CTM6-B3-20IW4-016K	TFR1/8C
20195-00900	OSPP63000000000120000000000	CTM6-B3-2BIW4-016K	TFR3/8
20195-01100	OSPP63000000000120000000000	CTM6-B3-2BIW4-016K	TFR3/8C
20195-01100	OSPP63000000000200000000000	CTM6C	TFRM10
20195-03500	OSPP63000000000200000000000	CTM6C-2	TFRM10C
20195-03500	OSPP63000000000300000000000	CTM-90-G1	TFRM12
20196-00256	OSPP63000000000300000000000	CTM-90-G1	TFRM12C
20196-00256	OSPP63000000000320000000000	CTM-90-G2	TFRM14
20196-00270	OSPP63000000000320000000000	CTM-90-G2	TFRM14C
20196-00270	OSPP63000000000320001000000	CTM9B40	TFRM8
20196-00300	OSPP63000000000320001000000	CTM9C	TFRM8C
20196-00300	OSPP63000000000350003000000	CTM9C-2	TFS10
20196-00400	OSPP63000000000350003000000	CTP-3L	TFS10B
20196-00400	OSPP63000000000380000000000	CTP-3L	TFS10R
20196-00500	OSPP63000000000380000000000	CTP-3R	TFS13
20196-00500	OSPP63000000000400000000000	CTP-3R	TFS13B
20196-00550	OSPP63000000000400000000000	CTRFL	TFS13R
20196-00550	OSPP63000000000420000000000	CTRFL	TFTF-8-8
20196-00700	OSPP63000000000420000000000	CTSA	TFV1/219
20196-00700	OSPP63000000000420003000000	CTSA	TFV1/410
20196-00900	OSPP63000000000420003000000	CTSK032	TFV1/413
20196-00900	OSPP63000000000430003000000	CTSK032	TFV1/810
20196-00935	OSPP63000000000430003000000	CTSK040	TFV3/813
20196-00935	OSPP63000000000440000000000	CTSK040	TFVM1010
20196-01000	OSPP63000000000440000000000	CTSK050	TFVM1413
20196-01000	OSPP63000000000440000000F000	CTSK050	TFVM2419
20196-01650	OSPP63000000000440000000F000	CTSK063	TFVS10
20196-01650	OSPP63000000000440004000000	CTSK063	TFVS12
20196-01900	OSPP63000000000440004000000	CTSK080	TFVS16
20196-01900	OSPP63000000000450000000000	CTSK080	TFVS6
201A-2648	OSPP63000000000450000000000	CTSK080V	TFVS8
201A-2649	OSPP63000000000450003000000	CTSK080V	TFW10B
201A-2656	OSPP63000000000450003000000	CTSK100	TFW10R
201A-2911	OSPP63000000000450005000000	CTSK100	TFW10S
201A-2916	OSPP63000000000450005000000	CTSK100V	TFW13B
201A-2946	OSPP63000000000460004000000	CTSK100V	TFW13R
201A-2947	OSPP63000000000460004000000	CTX12	TFW13S
201A-2948	OSPP63000000000500000000000	CTX12-WO	TFW19B
201A-2949	OSPP63000000000500000000000	CTX16	TFW19R
201A-2950	OSPP63000000000500000200000	CTX24	TFW19S
201A-2951	OSPP63000000000500000200000	CTX4440	TG0140EN440AAAB
201A-2952	OSPP63000000000550000000000	CTX4440-PM	TG0140EN440HABA
201A-2953	OSPP63000000000550000000000	CTX6660	TG0140EN460AAAB
201A-2956	OSPP63000000000550004000000	CTX6660-PM	TG0140EW010AAAB
201A-2957	OSPP63000000000550004000000	CTX6660-WO	TG0140EW440AAAB
201A-3066	OSPP63000000000550005000000	CTX9990	TG0140EW441BBBW
201A-3914	OSPP63000000000550005000000	CTX9990-PM	TG0140EW450AAAB
201A-4287	OSPP63000000000600000000000	CTX9990-SOGWO	TG0140EW450AAFX
201A-4344	OSPP63000000000600000000000	CTX9990-WO	TG0140EW450LABB
201A-4437	OSPP63000000000600000400000	CU464078	TG0140EW460AAAA

201A-4466	OSPP63000000600000400000	CU464740	TG0140EW460AAAB
201A-4468	OSPP63000000600005000000	CU467049	TG0140EW460FSAB
201A-4470	OSPP63000000600005000000	CU62062Z	TG0140EW461LAAY
201A-5288	OSPP63000000620005000000	CU63052Z	TG0140HV450AAAB
201A-5289	OSPP63000000620005000000	CV03-1/2-NT	TG0140HW450AAAB
201A-5290	OSPP63000000635005000000	CV03-1/4-NT	TG0140HW460AAAB
201A-5372	OSPP63000000635005000000	CV03-3/8-NT	TG0140HW460BBCG
201A-5768	OSPP63000000700000000000	CV05HSCKG	TG0140MV010AAAB
201A-8698	OSPP63000000700000000000	CV05HSCKG	TG0140MV450AAAB
201A-8699	OSPP63000000700004000000	CV05HSG	TG0140MV460AAAB
201A-8736	OSPP63000000700004000000	CV05HSG	TG0140MV920AAAB
201A-8745	OSPP63000000700005000000	CV05LSCKG	TG0140MW440AAAB
201B-2046	OSPP63000000700005000000	CV05LSCKG	TG0140MW450AAAB
201B-3228	OSPP63000000710000000000	CV05LSG	TG0140MW460AAAB
201B-5453	OSPP63000000710000000000	CV05LSG	TG0140MW461AAAB
201B-7756	OSPP63000000720005000000	CV1000SK	TG0140SZ080LAAD
201B-9558	OSPP63000000720005000000	CV10HSCKG	TG0140VX460AAAB
201C-0389	OSPP63000000750000000000	CV10HSCKG	TG0140VX461AAAB
201C-1478	OSPP63000000750000000000	CV10HSG	TG0170EW010AAAB
201D-0085	OSPP63000000760000000000	CV10HSG	TG0170EW440AAAB
201D-0099	OSPP63000000760000000000	CV10HSGBODY	TG0170EW460AAAA
201D-0159	OSPP63000000770000400000	CV10HSGBODY	TG0170EW460AAAB
201D-0198	OSPP63000000770000400000	CV10LSCKG	TG0170EW460FSAB
201D-0277	OSPP63000000800000000000	CV10LSCKG	TG0170EW460FSAL
201D-0424	OSPP63000000800000000000	CV10LSG	TG0170EW460LAAY
201D-0447	OSPP63000000800001000000	CV10LSG	TG0170EW461LAAY
201D-0496	OSPP63000000800001000000	CV10LSGBODY	TG0170HV080AAAB
201D-0558	OSPP63000000800004000000	CV10LSGBODY	TG0170HV450AAAB
201D-0595	OSPP63000000800004000000	CV15HSCKG	TG0170HW450AAAB
201D-0596	OSPP63000000800005000000	CV15HSCKG	TG0170HW460AAAB
201D-0783	OSPP63000000800005000000	CV15HSG	TG0170HW460AAAH
201D-0878	OSPP63000000820000000000	CV15HSG	TG0170MN440HABA
201D-1613	OSPP63000000820000000000	CV15HSGBODY	TG0170MW441AAAB
201E-1564	OSPP63000000840000000000	CV15HSGBODY	TG0170MW460AAAH
201LG1GVG2	OSPP63000000840000000000	CV15LSCKG	TG0170MW460BBBN
201LG1GVG2	OSPP63000000850000000000	CV15LSCKG	TG0170MW461AAAB
201LG1JVG2	OSPP63000000850000000000	CV15LSG	TG0170VX440AAAB
201LG1JVG2	OSPP63000000850005000000	CV15LSG	TG0170VX441AAAB
201LG2JVG2	OSPP63000000850005000000	CV15LSGBODY	TG0170VX460AAAB
201LG2JVG2	OSPP63000000880003000000	CV15LSGBODY	TG0195EN440AAAB
201LG2NVG7	OSPP63000000880003000000	CV16-10-P-O-5	TG0195EN460AAAB
201LG2NVG7	OSPP63000000900000000000	CV20HSCKG	TG0195EN460HAAU
201LG2PVG7	OSPP63000000900000000000	CV20HSCKG	TG0195EW080AAAB
201LG2PVG7	OSPP63000000090000000F000	CV20HSG	TG0195EW080AABP
201LG3SVG7	OSPP63000000090000000F000	CV20HSG	TG0195EW440AAAB
201LG3SVG7	OSPP63000000900001000000	CV20HSGBODY	TG0195EW450AAAB
201LG3UVG7	OSPP63000000900001000000	CV20HSGBODY	TG0195EW460AAAA
201LG3UVG7	OSPP63000000900004000000	CV20HSTTG	TG0195EW460AAAB
201LG4SVG7	OSPP63000000900004000000	CV20HSTTG	TG0195EW460BBBJ
201LG4SVG7	OSPP63000000900005000000	CV20LSCKG	TG0195EW460FSAB
201LG4UVG7	OSPP63000000900005000000	CV20LSCKG	TG0195EW461FSAB
201LG4UVG7	OSPP630000000975001A00000	CV20LSG	TG0195HB080AAGP
20-20 CBZ-SS	OSPP630000000975001A00000	CV20LSG	TG0195HB080AANG

20-20 EBZ-SS	OSPP63000000001000000000000	CV20LSGBODY	TG0195HK080AABP
20-20 FBZ-SS	OSPP63000000001000000000000	CV20LSGBODY	TG0195HV080AAAB
20-20 HBZ-SS	OSPP63000000001000000400000	CV25HSG	TG0195HV080AABP
20-20 MHN-SS	OSPP63000000001000000400000	CV25HSG	TG0195HV080AAFX
20-20 SE-SS	OSPP63000000001000005000000	CV25HSTTG	TG0195HV440AAAB
20-20-10JMTXS	OSPP63000000001000005000000	CV25HSTTG	TG0195HV450AAAB
20-20-12JMTXS	OSPP63000000001020001000000	CV25LSG	TG0195HV450LABB
2020-149W	OSPP63000000001020001000000	CV25LSG	TG0195HW080AAAB
20-20-16JMTXS	OSPP63000000001030000000000	CV25LSGBODY	TG0195HW080AAAF
20-20-20 FT-SS	OSPP63000000001030000000000	CV25LSGBODY	TG0195HW081AAAB
20-20-20 JBZ-SS	OSPP63000000001090000000000	CV30AHSG	TG0195HW440AAAB
2020-4015	OSPP63000000001090000000000	CV30AHSG	TG0195HW450AAAB
2020-5583	OSPP63000000001100000000000	CV30AHSGBODY	TG0195HW460AAAB
2020-5686	OSPP63000000001100000000000	CV30AHSGBODY	TG0195HW460AAAH
2020-6183	OSPP63000000001100000000F000	CV30ALSG	TG0195MN460AAAB
2020-6184	OSPP63000000001100000000F000	CV30ALSG	TG0195MV450AAAA
2020-6281	OSPP63000000001100005000000	CV30ALSGBODY	TG0195MV450AAAB
2020-6452	OSPP63000000001100005000000	CV30ALSGBODY	TG0195MW010AAAB
2020-6453	OSPP63000000001150000000000	CV4501-08L	TG0195MW020AAAB
2020-6453-DA	OSPP63000000001150000000000	CV463124U010	TG0195MW440AAAB
2020-6453-YB	OSPP63000000001150005000000	CV463124U015	TG0195MW450AAAB
2020-6454	OSPP63000000001150005000000	CV463124U025	TG0195MW450BBCG
2020-6454-YB	OSPP63000000001200005000000	CV464730U035	TG0195MW460AAAB
2020-6455	OSPP63000000001200005000000	CV464744U015	TG0195VX460AAAB
2020-6456	OSPP63000000001220000000000	CV465115U050	TG0240EN450AAAB
2020-6456-YB	OSPP63000000001220000000000	CV465336U012	TG0240EN460AAAB
2020-6457	OSPP63000000001250000000000	CV465337U012	TG0240EW080AAAB
2020-6485	OSPP63000000001250000000000	CV465346U012	TG0240EW440AAAB
2020-7036	OSPP63000000001300000000000	CV465417U012	TG0240EW440AAFX
2020-7310	OSPP63000000001300000000000	CV465418U012	TG0240EW440BBCG
2020-8566	OSPP63000000001300000400000	CV465419U012	TG0240EW450AAAB
2020-8586	OSPP63000000001300000400000	CV465433U075	TG0240EW460AAAB
20-20-8JMTXS	OSPP63000000001300001000000	CV465433U100	TG0240EW461LAAY
2020FIL	OSPP63000000001300001000000	CV465528U225	TG0240EY440LAAY
2020FIL	OSPP63000000001300005000000	CV465528U300	TG0240HK440AAAB
2020N-012V30	OSPP63000000001300005000000	CV465528U450	TG0240HK460AAAB
2020N-012V50	OSPP63000000001400000000000	CV465601U012	TG0240HK460AAAH
2020N-012V50-DL	OSPP63000000001400000000000	CV467897U050	TG0240HK460HAAH
2020N-016V30	OSPP63000000001400004000000	CV467917U150	TG0240HK461AAAB
2020N-025V30	OSPP63000000001400004000000	CV50130U24	TG0240HV080AAAB
2020N-025V30-DL	OSPP63000000001400005000000	CV50130U24	TG0240HV080AABP
2020N-025V30-RL	OSPP63000000001400005000000	CV6001-08L	TG0240HV190AAAF
2020N-02V30	OSPP63000000001420000000000	CV820SK	TG0240HV190AABP
2020N-02V30-DL	OSPP63000000001420000000000	CVA210HS4BL	TG0240HV440AAAB
2020PM-OR	OSPP63000000001460000000000	CVA210HS4BL	TG0240HV450AAAB
2020SM-OR	OSPP63000000001460000000000	CVA-DN	TG0240HV450BBBC
2020T-012V32	OSPP63000000001500000000000	CVA-DN	TG0240HV450BBCG
2020TM-OR	OSPP63000000001500000000000	CVA-V	TG0240HV460AAAB
2-021-N552-9	OSPP63000000001500005000000	CVA-V	TG0240HW080AAAB
2-021N552-90	OSPP63000000001500005000000	CVGVXCN	TG0240HW440BBCG
2-021-V894-9	OSPP63000000001520000000000	CVH081P	TG0240HW450AAAB
2022N-04V91-10K	OSPP63000000001520000000000	CVH103P	TG0240HW460AAAB
2022N-06V91-5K	OSPP63000000001520005000000	CVH161P20	TG0240HW460BBBF

2022N-08V15-10K	OSPP630000001520005000000	CVH161P20V	TG0240HW460BBBN
20-24 C5OLO-S	OSPP630000001570005000000	CVK-D201G	TG0240HW460BBCG
20-24 C5OX-S	OSPP630000001570005000000	CVK-D201G	TG0240HW461AAAB
20-24 CTX-S	OSPP630000001600000000000	CVK-E	TG0240HY460AAAB
20-24 F5OG5-S	OSPP630000001600000000000	CVK-E	TG0240HZ460AAWE
20-24 F5OLO-S	OSPP630000001600001000000	CVK-F	TG0240HZ460AAWG
20-24 F5OX-S	OSPP630000001600001000000	CVK-F	TG0240HZ460AAWH
20-24 LOHB3-S	OSPP630000001620000000000	CVK-S	TG0240LS080AABU
20-24C4OMLOS	OSPP630000001620000000000	CVK-S	TG0240MN440HABA
20-24F3MXS	OSPP630000001650000000000	CVM105M	TG0240MN460AAAB
20-24F42EDMLOS	OSPP630000001650000000000	CVQ25HS6224BDG	TG0240MV450AAAB
20-24F42EDMLOSV	OSPP630000001650004000000	CVQ25HS6224BDG	TG0240MW010AAAB
20-24F42EDMXS	OSPP630000001650004000000	CVQ30HS0224BDG	TG0240MW051BBDL
20-24F42EDMXSS	OSPP630000001700000000000	CVQ30HS0224BDG	TG0240MW051LABE
20-24F4OMXS	OSPP630000001700000000000	CVQ30HS2224BDG	TG0240MW440AAAB
2024FIL	OSPP630000001700003000000	CVQ30HS2224BDG	TG0240MW440BBCG
2024FIL	OSPP630000001700003000000	CVR105M	TG0240MW450AAAB
20-24LEMQ1SS	OSPP630000001700005000000	CW047379	TG0240MW460AAAB
20-24LEMQ2SS	OSPP630000001700005000000	CW-110-1M-NC-15196	TG0240MY440LAAY
20-24LOEMQ1CF	OSPP630000001770000000000	CW-210-2C-NC-15052	TG0240VX460AAAB
20-24XEMQ1CF	OSPP630000001770000000000	CW-210-3B-NC-15238	TG0240VY460AAAB
20-24XEMQ1SS	OSPP630000001800000000000	CW-210-4C-NC-15031	TG0280EN440AAAB
20-24XEMQ2CF	OSPP630000001800000000000	CW-310-2A-AC-15166	TG0280EN440AAFG
20-24XEMQ2SS	OSPP630000001850000000000	CW-310-3N-NC-14852	TG0280EN440AAKA
2-025-N552-9	OSPP630000001850000000000	CW-310-4M-NC-15108	TG0280EN460AAAB
2-025-V894-9	OSPP630000002000000000000	CW-310-6A-NC-15175	TG0280EW080AABP
20260FIL	OSPP630000002000000000000	CW-410-4N-AC-15120	TG0280EW440AAAB
20260FIL	OSPP630000002000003000000	CW463166	TG0280EW450AAAB
20261FIL	OSPP630000002000003000000	CW464321U016	TG0280EW460AAAA
20261FIL	OSPP630000002200000000000	CW465114	TG0280EW460AAAB
20267FIL	OSPP630000002200000000000	CW465385	TG0280EW461LAAY
20267FIL	OSPP630000002300001000000	CW467141	TG0280EY440LAAY
20268FIL	OSPP630000002300001000000	CW467410U016	TG0280HK080AABP
20268FIL	OSPP630000002300004000000	CW467554	TG0280HK460AAAB
20269FIL	OSPP630000002300004000000	CWCA-LIN	TG0280HK460HAAM
20269FIL	OSPP630000002350000000000	CWGA-LHN	TG0280HV080AAAB
2026FIL	OSPP630000002350000000000	CWGA-LIN	TG0280HV080AAAF
2026FIL	OSPP630000002500000000000	CWGK-LHN	TG0280HV080AABP
20270FIL	OSPP630000002500000000000	CWGK-LIN	TG0280HV190AAAF
20270FIL	OSPP630000002500000M00000	CWIA-LHN	TG0280HV450AAAB
20274FIL	OSPP630000002500000M00000	CW-MLX-HED-15102	TG0280HV460AAAB
20274FIL	OSPP630000002800000000000	CW-R7-HED-RC-14056	TG0280HV460BBCG
20278FIL	OSPP630000002800000000000	CX4444	TG0280HW080AAAF
20278FIL	OSPP630000002950000000000	CX4444-PM	TG0280HW080AABP
20282FIL	OSPP630000002950000000000	CX4444-SOG	TG0280HW080BBCG
20282FIL	OSPP630000003000000200000	CX4444-SOGWO	TG0280HW460AAAB
20285-00340	OSPP630000003000000200000	CX5555	TG0280HW460AAAH
20285-00340	OSPP630000003200004000000	CX6666	TG0280HW460BBCG
20285-00420	OSPP630000003200004000000	CX6666-PM	TG0280HX080AAAB
20285-00420	OSPP630000003300000000000	CX9999	TG0280ML440LAAY
20285-00500	OSPP630000003300000000000	CX9999-SOG	TG0280MV450AAAB
20285-00500	OSPP630000003300000200000	CX9999-SOGWO	TG0280MV451AAAB
20286-00420	OSPP630000003300000200000	CXB12	TG0280MW010AAAB

20286-00420	OSPP630000003300000A00000	CXB16	TG0280MW020AAAB
20286-00500	OSPP630000003300000A00000	CXB16-LT	TG0280MW080AAAB
20286-00500	OSPP630000003380005A00000	CXB24	TG0280MW440AAAB
20286-00503	OSPP630000003380005A00000	CXB24-CP	TG0280MW440AAAH
20286-00503	OSPP630000003500001000000	CXB4400	TG0280MW441AAAB
20286-00950	OSPP630000003500001000000	CXB6600	TG0280MW441AAAH
20286-00950	OSPP630000003900004000000	CXB6600-SOGWO	TG0280MW450AAAB
20286-01200	OSPP630000003900004000000	CXB9900	TG0280MW450AAAH
20286-01200	OSPP630000003986004000000	CXB9900-SOG	TG0280MW460AAAB
20287-00175	OSPP630000003986004000000	CXB9900-SOGWO	TG0280MY440LAAY
20287-00175	OSPP630000004000001A00000	CXB9902	TG0280VX440AAAB
20287-00300	OSPP630000004000001A00000	CXF16-10	TG0280VX460AAAB
20287-00300	OSPP630000004000005000000	CXF16-35	TG0335EN440FSBL
20287-00320	OSPP630000004000005000000	CXF16-5	TG0335EN450AAAB
20287-00320	OSPP630000005000000000000	CXF16-65	TG0335EN460AAAB
20287-00550	OSPP630000005000000000000	CXF4-35	TG0335EN460BBBF
20287-00550	OSPP630000100350000000000	CXF4-5	TG0335EN460HAAP
20287-00650	OSPP630000100350000000000	CXF4-65	TG0335EN460HABA
20287-00650	OSPP630000100900000000000	CXF6-10	TG0335EW440AAAB
20287-00700	OSPP630000100900000000000	CXF6-35	TG0335EW440AAFX
20287-00700	OSPP630000101000000000000	CXF6-5	TG0335EW450AAAB
20287-00800	OSPP630000101000000000000	CXF6-65	TG0335EW450LABB
20287-00800	OSPP630000101600000000000	CXF9-35	TG0335EW460AAAB
20288-00600	OSPP630000101600000000000	CXF9-5	TG0335EW460AAFX
20288-00600	OSPP630001000150000000000	CXF9-5-WO	TG0335EW460AAGE
20288-02720	OSPP630001000150000000000	CXF9-65	TG0335EW460BBBF
20288-02720	OSPP630001000400000000000	CXHAXAN	TG0335EW460FSAB
20288FIL	OSPP630001000400000000000	CXK1202	TG0335EW460FSAL
20288FIL	OSPP630001000750004000000	CXK1602	TG0335EW461LAAY
20290-00410	OSPP630001000750004000000	CXK4402	TG0335EX460AAAA
20290-00410	OSPP630001000850000200000	CXK6602	TG0335EX460AAAB
20295-00910	OSPP630001000850000200000	CXK9902	TG0335HB080AABP
20295-00910	OSPP630001000850004200000	CXO12	TG0335HK440BBBF
20298-00550	OSPP630001000850004200000	CXO12-BO	TG0335HK460AAAB
20298-00550	OSPP630001000900000000000	CXO12-TO	TG0335HK460HAAM
2-029-N552-9	OSPP630001000900000000000	CXO16	TG0335HV080AAAA
2-029-V894-9	OSPP630001001000000000000	CXO16-TO	TG0335HV080AAAB
202A-0582	OSPP630001001000000000000	CXO4400	TG0335HV080AABP
202A-0673	OSPP630001001830000000000	CXO4400-10	TG0335HV080AAFX
202A-2648	OSPP630001001830000000000	CXO6600	TG0335HV080LABU
202A-2658	OSPP630001004000000000000	CXO6600-ESR1648	TG0335HV440AAAB
202A-2916	OSPP630001004000000000000	CXO6600-TO	TG0335HV450AAAB
202A-2948	OSPP630004000400000004000	CXO9900	TG0335HV460AAAB
202A-2949	OSPP630004000400000004000	CXO9900-100	TG0335HW080AAAB
202A-2950	OSPP630004000600000004000	CXO9900-45	TG0335HW080AAAF
202A-2953	OSPP630004000600000004000	CXO9900-50	TG0335HW080AABP
202A-2954	OSPP630004000800000004000	CXO9900-70	TG0335HW080BBCG
202A-2955	OSPP630004000800000004000	CXO9900-BO	TG0335HW440BBBF
202A-4220	OSPP630004001000000000000	CXO9900-SOG	TG0335HW450AAAB
202A-4221	OSPP630004001000000000000	CXO9900-SOGTO	TG0335HW460AAAB
202A-4222	OSPP630010000350000000000	CXO9900-SOGTO10	TG0335HW460BBBJ
202A-4230	OSPP630010000350000000000	CXO9900-TO	TG0335HW460BBCG
202A-4430	OSPP630010000445000000000	CXX12	TG0335HY460AAAB

202A-4466	OSPP630010000445000000000	CXX12-WO	TG0335MN460HAAP
202A-4467	OSPP630010001090000000000	CXX16	TG0335MS050AAAA
202A-4481	OSPP630010001090000000000	CXX24	TG0335MV080AABP
202A-4482	OSPP630010001100004000000	CXX4444	TG0335MV440AAAB
202A-4483	OSPP630010001100004000000	CXX4444-PM	TG0335MV441AAAB
202A-4484	OSPP630010001220000000000	CXX6666	TG0335MV450AAAA
202A-4485	OSPP630010001220000000000	CXX6666-PM	TG0335MV450AAAB
202A-4486	OSPP630010001400000000000	CXX9999	TG0335MV460AAAA
202A-4487	OSPP630010001400000000000	CXX9999-SOGWO	TG0335MW440AAAB
202A-4488	OSPP630010001880000000000	CY054981	TG0335MW450AAAB
202A-5290	OSPP630010001880000000000	CY055383	TG0335MW450AAAH
202B-4928	OSPP630010002000000000000	CY389842	TG0335MW460AAAB
202B-4929	OSPP630010002000000000000	CY463082	TG0335MW460AAAH
202D-0596	OSPP630010002400000000000	CY464088	TG0335US170AABB
202D-0596-R	OSPP630010002400000000000	CY464144	TG0335VX460AAAB
20303-01140	OSPP630010003400000000000	CY464490	TG0405EN460AAAB
20303-01140	OSPP630010003400000000000	CY465108	TG0405EW440AAAB
2030-4015	OSPP630010003400000200000	CY466271	TG0405EW450AAAB
2030-4634	OSPP630010003400000200000	CY466533	TG0405EW460AAAB
2030-6184	OSPP630012000750004000000	CY466780U025	TG0405EW460FSAB
2030-6281	OSPP630012000750004000000	CY467459	TG0405EX460AAAB
2030-6453	OSPP630012001050004000000	CY467538	TG0405HA080AAAB
2030-6453-DA	OSPP630012001050004000000	CY468560U010	TG0405HB080AAAB
2030-6453-YB	OSPP630012001150004000000	CY468709U400	TG0405HB080AABP
2030-6454	OSPP630012001150004000000	CY469609	TG0405HV080AABP
2030-6454-DA	OSPP630012002000004000000	CYB04559R102	TG0405HV440AAAB
2030-6454-YB	OSPP630012002000004000000	CZ463068	TG0405HV450AAAB
2030-6456	OSPP630100000590000000000	CZ463112	TG0405HV460AAAB
2030-6456-DA	OSPP630100000590000000000	CZ465143	TG0405HW080AABP
2030-6456-YB	OSPP630100001000000000000	D01BD0	TG0405HW440AAAB
2030-6457	OSPP630100001000000000000	D01BD0	TG0405HW460AAAB
2030-6457-DA	OSPP630100001000005000000	D01P-02-70	TG0405HX080AABP
2030-6457-YB	OSPP630100001000005000000	D01P-02-70	TG0405HY080AAAB
20307-00450	OSPP630100001190001000000	D02B2-0.2N	TG0405MN460AAAB
20307-00450	OSPP630100001190001000000	D02B2-0.2V	TG0405MV450AAAB
2030-7036	OSPP630100001300000000000	D02B2-1.0N	TG0405MW440AAAB
2030-7038	OSPP630100001300000000000	D02B2-1.5N	TG0405MW441AAAB
2030-7041	OSPP630100001450005000000	D02B2-10.0N	TG0405MW460AAAB
2030-7043	OSPP630100001450005000000	D02B2-2.1N	TG0405MW460BBBN
2030-7071	OSPP630100003140000000000	D02B2-2.5N	TG0405VX460AAAB
2030-7245	OSPP630100003140000000000	D02B2-2.5N181	TG0475EN440AAAB
2030-7310	OSPP630110001050003000000	D02B2-25.0N	TG0475EN460AAAB
20308-00370	OSPP630110001050003000000	D02B2-3.4N	TG0475EW080AABP
20308-00370	OSPP630110101200001000000	D02B2-4.0N	TG0475EW440AAAB
2030FIL	OSPP630110101200001000000	D02B2-6.0N	TG0475EW440LABC
2030FIL	OSPP630200000590000000000	D02BD0	TG0475EW450AAAB
20-30MMLOHB3S	OSPP630200000590000000000	D02BD0	TG0475EW460AAAB
2030T-03V70	OSPP630200000875000000000	D02P-01-70	TG0475EW460FSAB
2030T-03V70-DL	OSPP630200000875000000000	D02P-01-70	TG0475HK080AABP
2030T-03V70-RL	OSPP630200001050000000000	D04B2-0.0N	TG0475HK440AAAB
2030T-04CON	OSPP630200001050000000000	D04B2-0.2N	TG0475HK450AAAB
2030T-04R14	OSPP630200001100000000000	D04B2-0.2V	TG0475HK460AAAB
2030T-04V70	OSPP630200001100000000000	D04B2-1.0N	TG0475HK460HAAH

2030T-04V70-DL	OSPP63020000136000000000	D04B2-15.0N	TG0475HK460HAAM
2030T-04V70-RL	OSPP63020000136000000000	D04B2-2.1N	TG0475HV080AAAB
2030T-05R14	OSPP63020000140000000000	D04B2-2.1V	TG0475HV080AABP
2030T-05V70	OSPP63020000140000000000	D04B2-6.9N	TG0475HV190AAAF
2030T-05V70-DL	OSPP63020000165000000000	D04B2-6.9V	TG0475HV440AAAH
2030T-06CON	OSPP63020000165000000000	D04LL71X	TG0475HV450AAAB
2030T-06R14	OSPP63020000181500000000	D04LLMSX	TG0475HV460AAAB
2030T-06V70	OSPP63020000181500000000	D04LLOFF71X	TG0475HW440AAAB
2030T-06V70-DL	OSPP63020010100000000000	D04LLUNGEHC3AX	TG0475HW450AAAB
2030T-06V70-LL	OSPP63020010100000000000	D04LLVOLX	TG0475HW460AAAB
2030T-06V70-RL	OSPP63020010145000000000	D04LLX	TG0475HW460AAAH
2030T-08CON	OSPP63020010145000000000	D04LLXBP	TG0475MS200AAAA
2030T-08R14	OSPP63020100160000000000	D05LLMSX	TG0475MV010AAAA
2030T-08V70	OSPP63020100160000000000	D05LLX	TG0475MV080AAAB
2030T-10CON	OSPP63020110035000040000	D06B2H0.1N	TG0475MV080AABP
2030T-10R14	OSPP63020110035000040000	D06B2H1.0N	TG0475MV440AAAB
2030T-10V70	OSPP63020110206000000000	D06B2H2.1N	TG0475MV450AAAA
2030T-12CON	OSPP63020110206000000000	D06B2H3.4N	TG0475MV450AAAB
2030T-12R14	OSPP63021000080000000000	D06B2P0.0N	TG0475MV460AAAB
2030T-12V70	OSPP63021000080000000000	D06B2P0.1N	TG0475MW440AAAB
2030T-12V70-DL	OSPP63021210180000040000Y	D06B2P1.0N	TG0475MW450AAAB
2030T-16CON	OSPP63021210180000040000Y	D06B2P1.0V	TG0475MW460AAAB
2030T-16R14	OSPP63100000220000000000	D06B2P2.1N	TG0475VX460AAAB
2030T-16V70	OSPP63100000220000000000	D06C2-2.5N	TG0530EW080AAAB
2030TB-04CON	OSPP63600000032000000000	D06LL71X	TG0530EW080AABP
2030TB-06CON	OSPP63600000032000000000	D06LLMSX	TG0530EW440AAAB
2030TB-08CON	OSPP63600000050000000000	D06LLX	TG0530EW450AAAB
2030TB-10CON	OSPP63600000050000000000	D06LMSX	TG0530EW460AAAB
2030TB-10V70	OSPP63600000100000000000	D06SDX	TG0530HK440AAAB
2030TB-12CON	OSPP63600000100000000000	D08.5SX	TG0530HK460AAAB
2030TB-16CON	OSPP63600000100000300000	D08-02-FKG0	TG0530HV080AAAF
20310-06100	OSPP63600000100000300000	D08-02-FKG0	TG0530HV080AABP
20310-06100	OSPP63600000115000000000	D08-C1-FKG0	TG0530HV440AAAB
20311FIL	OSPP63600000115000000000	D08-C1-FKG0	TG0530HV460AAAB
20311FIL	OSPP63600000140000000000	D08-C2-FK00	TG0530HW080AAAF
20312FIL	OSPP63600000140000000000	D08-C2-FK00	TG0530HW450AAAB
20312FIL	OSPP63600110117500000000	D08-C2-FKG0	TG0530HW460BBBN
20313FIL	OSPP63600110117500000000	D08-C2-FKG0	TG0530HY440AAAB
20313FIL	OSPP63601010315000100000	D08-C2-FL00	TG0530HY460AAAB
20314FIL	OSPP63601010315000100000	D08-C2-FL00	TG0530MN440AAAB
20314FIL	OSPP63610000065000300000	D08-C2-FLG0	TG0530MT200AAAB
20338FIL	OSPP63610000065000300000	D08-C2-FLG0	TG0530MV440AAAB
20338FIL	OSPP63610000090000000000	D08-C2-FR00	TG0530MV450AAAB
20339FIL	OSPP63610000090000000000	D08-C2-FR00	TG0530MW450AAAB
20339FIL	OSPP63C000000200000000000	D08LL71X	TG0530MW460AAAB
2033T-04V70	OSPP63C000000200000000000	D08LLMSX	TG0625EN440AAAB
2033T-05V70	OSPP63C000000270000000000	D08LLX	TG0625EW440AAAA
2033T-06V70	OSPP63C000000270000000000	D08LMSX	TG0625EW440AAAB
2033T-08V70	OSPP63C000000300000000000	D093-178	TG0625EW450AAAB
2033T-10V70	OSPP63C000000300000000000	D093-178	TG0625EW460AAAB
2033T-12V70	OSPP63C000000370000000000	D0AB-6-025	TG0625HK460AAAB
2033T-16V70	OSPP63C000000370000000000	D0AB-8-04	TG0625HV450AAAB
20340FIL	OSPP63C000000450000000000	D0WB2-0.3N	TG0625HV460AAAB

20340FIL	OSPP63C000000450000000000	D-10	TG0625HW080AABP
20341-00100	OSPP63C000000800000000000	D1000-23-01	TG0625HW460AAAB
20341-00100	OSPP63C000000800000000000	D1005-23-01	TG0625MV450AAAB
20341-00250	OSPP63C000000890000000000	D1008-11	TG0625MV460AAAB
20341-00250	OSPP63C000000890000000000	D1008-21-01	TG0625MW440AAAB
20341-00285	OSPP63C000000900000000000	D1008-22-01	TG0625MW460AAAB
20341-00285	OSPP63C000000900000000000	D1008-23-01	TG0785EW440AAAB
20341-00300	OSPP63C000001000000000000	D100C2	TG0785EW450AAAB
20341-00300	OSPP63C000001000000000000	D100C2	TG0785EW460AAAB
20341-00350	OSPP63C000001050000000000	D100P3	TG0785HL080AABP
20341-00350	OSPP63C000001050000000000	D100P3	TG0785HV460AAAB
20341-00370	OSPP63C000001200000000000	D100Q3	TG0785HW440AAAB
20341-00370	OSPP63C000001200000000000	D100Q3	TG0785HW460AAAB
20341-00400	OSPP63C000001220000000000	D1011-23-01	TG0785HY460AAAB
20341-00400	OSPP63C000001220000000000	D1013-22-01	TG0785MN440HAAP
20341-00470	OSPP63C000001300000000000	D1017-23-01	TG0785MN450AAAB
20341-00470	OSPP63C000001300000000000	D1018-21-01	TG0785MS030AAAB
20341-00500	OSPP63C000001400000000000	D1019-22-01	TG0785MV440AAAB
20341-00500	OSPP63C000001400000000000	D1020-23-01	TG0785MV450AAAB
20341-00600	OSPP63C000001500000000000	D1023-21-01	TG0785MW440AAAB
20341-00600	OSPP63C000001500000000000	D1024-22-01	TG0785MW460AAAB
20341-00650	OSPP63C000001500001000000	D1025-23-01	TG0960EW460AAAB
20341-00650	OSPP63C000001500001000000	D10LL71X	TG0960HV440AAAB
20341-01000	OSPP63C000001750000000000	D10LLMSX	TG0960HV440AAAH
20341-01000	OSPP63C000001750000000000	D10LLX	TG0960HV450AAAB
20341-01510	OSPP63C000002000000000000	D10LMSX	TG0960HW440AAAB
20341-01510	OSPP63C000002000000000000	D111FBB31LC4NF00	TG0960MV450AAAB
20341FIL	OSPP63C000002400000000000	D111FBE01LC2NF00	TG0960VL460AAAB
20341FIL	OSPP63C000002400000000000	D111FBE01LC2NF08	TH0140UX310AAAB
20342-00120	OSPP63C000002700000000000	D111FBE01LC4NJW0	TH0170US320AAAB
20342-00120	OSPP63C000002700000000000	D111FBE02LC2NKW0	TH0195MW490BBCG
20342-00125	OSPP63C000002900000000000	D111FHB11L2NB00	TH0195UX320AAAB
20342-00125	OSPP63C000002900000000000	D111FHB11L2NB08	TH0240MS320AAAB
20342-00150	OSPP63C000003100000000000	D111FHB11L2VB08	TH0240MS320BBBF
20342-00150	OSPP63C000003100000000000	D111FHB31H1NB00	TH0240MW490BBCG
20342-00200	OSPP63C000003185000000000	D111FHB31L1NB00	TH0240US310AAAB
20342-00200	OSPP63C000003185000000000	D111FHB31L1NE00	TH0240US310AAAF
20342-00280	OSPP63C010000800000000000	D111FHB31L1NS00	TH0240US310AABP
20342-00280	OSPP63C010000800000000000	D111FHB31L2NB00	TH0240UW490BBCG
20342-00300	OSPP63C010002413000000000	D111FHB31L2NE00	TH0280MS310AABP
20342-00300	OSPP63C010002413000000000	D111FHB31L2NE00X807	TH0280UB310AABP
20342-00310	OSPP63C010002796000000000	D111FHB31L2NS00	TH0280UL310AABP
20342-00310	OSPP63C010002796000000000	D111FHB31L4NE00	TH0280UL310HAAX
20342-00320	OSPP800000000150000000000	D111FHB32H1NB00	TH0280US310AAAB
20342-00320	OSPP800000000150000000000	D111FHB32H2NE00	TH0280US310AABP
20342-00360	OSPP800000000200000000000	D111FHB32H4NB00	TH0280US360AAAB
20342-00360	OSPP800000000200000000000	D111FHB32H5VS00	TH0280UW490BBCG
20342-00380	OSPP800000000260005000000	D111FHB32L1NB00	TH0335MS320AAAB
20342-00380	OSPP800000000260005000000	D111FHB32L1NB20	TH0335MS320BBBF
20342-00410	OSPP800000000270004000000	D111FHB32L1NE00	TH0335UB310AABP
20342-00410	OSPP800000000270004000000	D111FHB32L1NS00	TH0335US310AAAB
20342-00420	OSPP800000000300000000000	D111FHB32L1VB00	TH0335US310AABP
20342-00420	OSPP800000000300000000000	D111FHB32L2NB00	TH0335US320AAAB

20342-00560	OSPP80000000300000003000	D111FHB32L2NE00	TH0335US320BBBF
20342-00560	OSPP80000000300000003000	D111FHB32L2NS00	TH0335UX311AABP
20342-00600	OSPP80000000330005000000	D111FHB32L4NB00	TH0405MX320AAAB
20342-00600	OSPP80000000330005000000	D111FHE01H1NB00	TH0405UA310AABP
20342-00650	OSPP80000000340000000000	D111FHE01H1NE00	TH0405UB310AABP
20342-00650	OSPP80000000340000000000	D111FHE01H2NB00	TH0405US310AAAF
20342-00780	OSPP80000000360005000000	D111FHE01H2NE00X807	TH0405US310AAAH
20342-00780	OSPP80000000360005000000	D111FHE01H4NB00	TH0405US320AAAB
20342-00800	OSPP80000000380000000000	D111FHE01H5NB00	TH0405UX310AAAB
20342-00800	OSPP80000000380000000000	D111FHE01L1NB00	TH0475MS320AAAB
20342-01050	OSPP80000000400000000000	D111FHE01L1NS00	TH0475MS320BBBN
20342-01050	OSPP80000000400000000000	D111FHE01L1VB00	TH0475MW490BBCG
20342-01060	OSPP80000000400005000000	D111FHE01L2NB00	TH0475US310AAAB
20342-01060	OSPP80000000400005000000	D111FHE01L2NB08	TH0475US310AAAF
20342-01300	OSPP80000000415000000000	D111FHE01L2NB08X726	TH0475US310AABP
20342-01300	OSPP80000000415000000000	D111FHE01L2NE00	TH0475US310BBCG
20342-01690	OSPP80000000450000000000	D111FHE01L2NE00X807	TH0475US320AAAB
20342-01690	OSPP80000000450000000000	D111FHE01L2NS00	TH0475UW490BBCG
20342-02000	OSPP80000000465005000000	D111FHE01L2VB08	TH0475UX320AAAB
20342-02000	OSPP80000000465005000000	D111FHE01L4NB00	TH0530MW320AAAB
20342-02200	OSPP80000000480000000000	D111FHE01L4NB08	TH0530UB320AAAB
20342-02200	OSPP80000000480000000000	D111FHE01L5NB00	TH0530UL310AAAB
20343-00300	OSPP80000000500000000000	D111FHE01L5NB08	TH0530US310AABP
20343-00300	OSPP80000000500000000000	D111FHE02H2NB00	TH0530US310BBBN
20343-00400	OSPP80000000500000200000	D111FHE02H2NB20	TH0530US310BBDH
20343-00400	OSPP80000000500000200000	D111FHE02H2NE00	TH0530US730BBDN
20343-00450	OSPP80000000550000000000	D111FHE02H5VB00	TH0625MS310AAAB
20343-00450	OSPP80000000550000000000	D111FHE02L1NB00	TH0625MS310AABP
20343-00550	OSPP80000000550005000000	D111FHE02L1NB20	TH0625US320AAAB
20343-00550	OSPP80000000550005000000	D111FHE02L2NB00	TH0625US320BBBJ
20343-01500	OSPP80000000560000000000	D111FHE02L4NB00	TH0625UY320AAAB
20343-01500	OSPP80000000560000000000	D111FHE02L4VB00	TH06LM71X
20343-02000	OSPP80000000600004000000	D111FHE02L5VB00	TH06LMCF
20343-02000	OSPP80000000600004000000	D111FPB31LC2NK00	TH06LMKDSCF
20343-03500	OSPP80000000600005000000	D111FPB61LB2NK00	TH06LMKDSOMDCF
20343-03500	OSPP80000000600005000000	D111FPE01LC2NK00	TH06LMOMD71
20347-02000	OSPP80000000620000000000	D111FPE01LC2VK70	TH06LMOMDCF
20347-02000	OSPP80000000620000000000	D111FPE02LC2NS00	TH06LR71
20349FIL	OSPP80000000620004000000	D111FPE52LB2NS00	TH06LRCF
20349FIL	OSPP80000000620004000000	D111FPE56LC2VK70	TH06LRKDSCF
20350FIL	OSPP80000000650000000000	D111FSA31L2NXW0	TH06LRKDSOMDCF
20350FIL	OSPP80000000650000000000	D111FSA32L4VXW0	TH06LROMD71
20351FIL	OSPP80000000700000000000	D111FSA34L4NXW0	TH06LROMDCF
20351FIL	OSPP80000000700000000000	D111FSA80L2NXW0	TH06SMCF
20352FIL	OSPP80000000700004000000	D111FSA80L5NXW0	TH06SMKDSOMDCF
20352FIL	OSPP80000000700004000000	D111FSA86L4NXW0	TH06SMOMDCF
20353FIL	OSPP80000000700005000000	D111FSB31L2NXW0	TH06SR71
20353FIL	OSPP80000000700005000000	D111FSB31L4NLW0	TH06SRCF
20354FIL	OSPP80000000740000000000	D111FSB31L4NXW0	TH06SRKDSCF
20354FIL	OSPP80000000740000000000	D111FSB32L2NXW0	TH06SRKDSOMDCF
20355FIL	OSPP80000000780004000000	D111FSB34L4NXW0	TH06SROMDCF
20355FIL	OSPP80000000780004000000	D111FSB80L2NXW0	TH06ZLMKDSCF
20356FIL	OSPP80000000820000000000	D111FSE01L1NLW0	TH06ZLRKDSCF

20356FIL	OSPP80000000820000000000	D111FSE01L1NXW0	TH06ZSMKDSCF
20357FIL	OSPP80000000850000000000	D111FSE01L2NLW0	TH06ZSRKDSCF
20357FIL	OSPP80000000850000000000	D111FSE01L2NXW0	TH0785MS360AAAB
20358FIL	OSPP80000000850003000000	D111FSE01L4NLW0	TH0785UX320AAAB
20358FIL	OSPP80000000850003000000	D111FSE01L4NXW0	TH08LMCF
20361FIL	OSPP80000000850005000000	D111FSE01L4VXW0	TH08LMCFX
20361FIL	OSPP80000000850005000000	D111FSE01L5NLW0	TH08LMKDSCF
20362FIL	OSPP80000000900000000000	D111FSE01L5NXW0	TH08LMKDSOMDCF
20362FIL	OSPP80000000900000000000	D111FSE02L1NLW0	TH08LMOMDCF
20363FIL	OSPP80000000930005000000	D111FSE02L1NXW0	TH08LR71
20363FIL	OSPP80000000930005000000	D111FSE02L2NLW0	TH08LRCF
203A-2648	OSPP80000000950000000000	D111FSE02L2NXW0	TH08LRKD71
203A-2656	OSPP80000000950000000000	D111FSE02L2VXW0	TH08LRKDOMD71
203A-2657	OSPP80000000095000000F000	D111FSE02L4NLW0	TH08LRKDSCF
203A-2658	OSPP80000000095000000F000	D111VW001C1NJW	TH08LRKDSOMDCF
203A-2713	OSPP80000000950004000000	D111VW001C2NJW	TH08LROMDCF
203A-2916	OSPP80000000950004000000	D111VW001C2NJWTI6N	TH08LRVITCF
203A-2946	OSPP80000001000000000000	D111VW001C2NJWTI6NX129	TH08SMCF
203A-2947	OSPP80000001000000000000	D111VW001C2NYW3A	TH08SMKDSCF
203A-2948	OSPP80000001000004000000	D111VW001C4NJW	TH08SMKDSOMDCF
203A-2949	OSPP80000001000004000000	D111VW001E4NJW	TH08SMOMDCF
203A-2950	OSPP80000001000005000000	D111VW009C2NJW	TH08SR71
203A-2951	OSPP80000001000005000000	D111VW009C2NJW3A	TH08SRCF
203A-2952	OSPP80000001040005000000	D111VW020B2NJW	TH08SRKDOMD71
203A-5290	OSPP80000001040005000000	D111VW020B2NJW3A	TH08SRKDSCF
203B-0624	OSPP80000001050000000000	D111VW020H2NJW	TH08SRKDSOMDCF
203D-0596	OSPP80000001050000000000	D111VW043E2NJWTI5NX129	TH08SROMDCF
2040-149W	OSPP80000001050005000000	D111VW054C1NJW	TH08ZLMKDSCF
2040-4634	OSPP80000001050005000000	D111VW054C2NJW	TH08ZLRKDSCF
204-0600100-NT-25MT	OSPP80000001100004000000	D111VW054C2NJW3A	TH08ZLRKDSVITCF
204-0600100-NT-500	OSPP80000001100004000000	D111VW054C4NJW	TH08ZSMKDSCF
2040-6111	OSPP80000001120000000000	D111VW059C1NJW3A	TH08ZSR71
2040-6183	OSPP80000001120000000000	D111VW082C1NJW	TH08ZSRKDSCF
2040-7038	OSPP80000001130005000000	D111VW082C4NJW	TH10LMCF
2040-7042	OSPP80000001130005000000	D119V001C4N	TH10LMKDSCF
2040-7310	OSPP80000001150000000000	D119V081C4N	TH10LMKDSOMDCF
2040-8566	OSPP80000001150000000000	D1200S	TH10LMOMDCF
20408FIL	OSPP800000001200000A00000	D12-C2-FKG0	TH10LMSTL1OMDCF
20408FIL	OSPP800000001200000A00000	D12-C2-FKG0	TH10LR71
20409-00250	OSPP80000001202100000000	D12LL71X	TH10LRCF
20409-00250	OSPP80000001202100000000	D12LLMSX	TH10LRDPR71CF
20409-00320	OSPP80000001202105000000	D12LLX	TH10LRKDSCF
20409-00320	OSPP80000001202105000000	D12LMSX	TH10LRKDSDPR71CF
20409-00450	OSPP80000001260005000000	D14SMSX	TH10LRKDSOMDCF
20409-00450	OSPP80000001260005000000	D-15	TH10LRKDSVITOMDCF
20409-00555	OSPP80000001270000000000	D15LL71X	TH10LROMD71
20409-00555	OSPP80000001270000000000	D15LLAQUAKLT	TH10LROMDCF
20409-00800	OSPP80000001270005000000	D15LLMSX	TH10SMCF
20409-00800	OSPP80000001270005000000	D15LMSX	TH10SMKDSOMDCF
20409-02676	OSPP80000001300000000000	D16SMSX	TH10SR71
20409-02676	OSPP80000001300000000000	D18-04-FK00	TH10SRCF
2040-9461	OSPP800000001300000A00000	D18-04-FK00	TH10SRKDSCF
2040-9645	OSPP800000001300000A00000	D18-04-FKG0	TH10SRKDSOMDCF

2040FIL	OSPP8000000013500000000000	D18-04-FKG0	TH10SROMDCF
2040FIL	OSPP8000000013500000000000	D18-C2-FK00	TH10ZLMKD71
2040H-03-03V10V10	OSPP8000000014000000000000	D18-C2-FK00	TH10ZLMKDSCF
2040H-03V05	OSPP8000000014000000000000	D18-C3-FG00	TH10ZLRKDSCF
2040H-03V10	OSPP8000000014000001000000	D18-C3-FG00	TH10ZSM71
2040H-03V10-DL	OSPP8000000014000001000000	D18-C3-FGG0	TH10ZSRKDSCF
2040H-03V10-RL	OSPP8000000014000005000000	D18-C3-FGG0	TH11-3
2040H-04-04-04V10	OSPP8000000014000005000000	D18-C3-FH00	TH12LMCF
2040H-04-04V10V10	OSPP8000000015000000000000	D18-C3-FH00	TH12LMKDSCF
2040H-04-04V10V10-DL	OSPP8000000015000000000000	D18-C3-FHG0	TH12LMKDSOMDCF
2040H-04V10	OSPP8000000015000001000000	D18-C3-FHG0	TH12LMOMDCF
2040H-04V10-DL	OSPP8000000015000001000000	D18-C3-FK00	TH12LRCF
2040H-04V10-LL	OSPP8000000015300000000000	D18-C3-FK00	TH12LRKD71
2040H-05-05-05V10V10V10	OSPP8000000015300000000000	D18-C3-FKG0	TH12LRKDSCF
2040H-05-05V10V10	OSPP8000000016000000000000	D18-C3-FKG0	TH12LRKDSOMDCF
2040H-05-05V10V10-DL	OSPP8000000016000000000000	D18-C3-FL00	TH12LROMD71
2040H-05-05V11V11	OSPP8000000016500000000000	D18-C3-FL00	TH12LROMDCF
2040H-05V10	OSPP8000000016500000000000	D18-C3-FLG0	TH12SMCF
2040H-05V10-4FACH	OSPP8000000017000000000000	D18-C3-FLG0	TH12SMKDSCF
2040H-05V10-DL	OSPP8000000017000000000000	D18-C4-FAP0	TH12SMKDSOMDCF
2040H-05V10-LL	OSPP8000000017000003000000	D18-C4-FAP0	TH12SMOMDCF
2040H-05V10-RL	OSPP8000000017000003000000	D18-C4-FG00	TH12SR71
2040H-06-06-06V10V10V10	OSPP8000000018000000000000	D18-C4-FG00	TH12SRCF
2040H-06-06V10V10	OSPP8000000018000000000000	D18-C4-FGG0	TH12SRKDOMD71
2040H-06-06V10V10-DL	OSPP8000000018250001000000	D18-C4-FGG0	TH12SRKDSCF
2040H-06V10	OSPP8000000018250001000000	D18-C4-FH00	TH12SRKDSOMDCF
2040H-06V10-4FACH	OSPP8000000018500000000000	D18-C4-FH00	TH12SROMDCF
2040H-06V10-DL	OSPP8000000018500000000000	D18-C4-FHG0	TH12ZLRKDSCF
2040H-06V10-RL	OSPP8000000018500000400000	D18-C4-FHG0	TH12ZSRKDSCF
2040H-08-08V10V10	OSPP8000000018500000400000	D18-C4-FK00	TH14SMCF
2040H-08-08V11V11	OSPP8000000018500005000000	D18-C4-FK00	TH14SRCF
2040H-08V10	OSPP8000000018500005000000	D18-C4-FKG0	TH14SRKD71
2040H-08V10-4FACH	OSPP8000000019000001000000	D18-C4-FKG0	TH15LMCF
2040H-10V10	OSPP8000000019000001000000	D18-C4-FL00	TH15LMKDSCF
2040H-12-16V10V10	OSPP8000000020000000000000	D18-C4-FL00	TH15LMKDSOMDCF
2040H-12V10	OSPP8000000020000000000000	D18-C4-FLG0	TH15LMOMDCF
2040H-12V10-DL	OSPP8000000020000004000000	D18-C4-FLG0	TH15LRCF
2040H-16V10	OSPP8000000020000004000000	D18-C4-GL00	TH15LRKD71
2040H-16V10-DL	OSPP8000000020000005000000	D18-C4-GL00	TH15LRKDOMD71
2040N-025V00	OSPP8000000020000005000000	D18LA6C+AQUAX	TH15LRKDSCF
2040N-02V00	OSPP8000000020500000000000	D18LMSX	TH15LRKDSOMDCF
2040N-02V00-DL	OSPP8000000020500000000000	D1A025-0.2N	TH15LROMDCF
2040N-02V00-P	OSPP8000000021500000000000	D1A025-10.0N	TH15ZLRKD71
2040N-02V22	OSPP8000000021500000000000	D1A025-2.5N	TH15ZLRKDSCF
2040N-02V22-RL	OSPP8000000022000003000000	D1A025-5.0N	TH16SMCF
2040N-03V00	OSPP8000000022000003000000	D1A060-0.2N	TH16SMKDSCF
2040N-03V00-DL	OSPP8000000022000004000000	D1A060-10.0N	TH16SMKDSOMDCF
2040N-03V00-LL-P	OSPP8000000022000004000000	D1A060-2.0N	TH16SMOMDCF
2040N-03V00-P	OSPP8000000022000005000000	D1A060-3.0N	TH16SR71
2040N-03V00-RL	OSPP8000000022000005000000	D1A060-5.0N	TH16SRCF
2040N-03V02	OSPP8000000024000000000000	D1A060-7.0N	TH16SRKD71
2040N-03V03	OSPP8000000024000000000000	D1B125-0.1N	TH16SRKDOMD71
2040N-03V03-RL	OSPP8000000024000004000000	D1B125-0.2N	TH16SRKDSCF

2040N-03V05	OSPP800000002400004000000	D1B125-0.2V	TH16SRKDSOMDCF
2040N-03V05-RL	OSPP800000002495000000000	D1B125-1.0N	TH16SROMDCF
2040N-03V22	OSPP800000002495000000000	D1B125-2.0N	TH16ZSRKDSCF
2040N-03V30	OSPP800000002500004000000	D1B125-3.0N	TH18LMCF
2040N-04-04V00V00	OSPP800000002500004000000	D1B125-5.0N	TH18LMKDSCF
2040N-04V00	OSPP800000002610000000000	D1DW001CNJW	TH18LMKDSOMDCF
2040N-04V00-DL	OSPP800000002610000000000	D1DW001CNJW4DC06X575	TH18LMOMD71
2040N-04V00-LL	OSPP800000002850000000000	D1DW001CNJWC06X575	TH18LMOMDCF
2040N-04V00-P	OSPP800000002850000000000	D1DW001E9NJW	TH18LR71
2040N-04V00-RL	OSPP800000003200000000000	D1DW001ENJW	TH18LRCF
2040N-04V02	OSPP800000003200000000000	D1DW001M9NKW	TH18LRKD71
2040N-04V03	OSPP800000003700005000000	D1DW002CVJW	TH18LRKDOMD71
2040N-04V05	OSPP800000003700005000000	D1DW002ENJDLJ5C06X575	TH18LRKDSCF
2040N-04V30	OSPP800000003975000000000	D1DW002EVJDLJ5C06X575	TH18LRKDSDPR71CF
2040N-04V74	OSPP800000003975000000000	D1DW002KNJW4DC06X575	TH18LRKDSOMDCF
2040N-04V74-P	OSPP800000004500000000000	D1DW002KNJWC06X575	TH18LROMD71
2040N-04V78	OSPP800000004500000000000	D1DW003FNJWI2N	TH18LROMDCF
2040N-04V80	OSPP800000005000000000000	D1DW004CNJW	TH18ZLMKDSCF
2040N-05-05V00V00	OSPP800000005000000000000	D1DW004CNJW4DC06X575	TH18ZLRKDSCF
2040N-05V00	OSPP800000006000000000000	D1DW004CNJWC06X575	TH20SM71
2040N-05V00-P	OSPP800000006000000000000	D1DW006CNJW	TH20SMCF
2040N-05V00-RL	OSPP800000100685000000000	D1DW006CVJW	TH20SMKDSOMDCF
2040N-05V02	OSPP800000100685000000000	D1DW006ENJW	TH20SMOMDCF
2040N-05V30	OSPP800000101610000000000	D1DW008ENJWC06X575	TH20SRCF
2040N-06-06V00V00	OSPP800000101610000000000	D1DW008ENJWS3	TH20SRKDOMD71
2040N-06V00	OSPP800000102000004000000	D1DW009CNJW	TH20SRKDSCF
2040N-06V00-DL	OSPP800000102000004000000	D1DW009ENGW	TH20SRKDSOMDCF
2040N-06V00-P	OSPP800001000300001000000	D1DW020BNGW	TH20SROMD71
2040N-06V00-RL	OSPP800001000300001000000	D1DW020BNJW	TH20ZSMKD71
2040N-06V02	OSPP800001000380000000000	D1DW020BNJW4DC06X575	TH20ZSRKDSCF
2040N-06V07	OSPP800001000380000000000	D1DW020BNJWC06X575	TH2-10-3PH
2040N-06V30	OSPP800001001100000400000	D1DW020BNJWI5N	TH2-11EK
2040N-08-08V00V00	OSPP800001001100000400000	D1DW020BNJWI5NC06X575	TH2-11EL
2040N-08V00	OSPP800001001800000000000	D1DW020BNJWTI5N	TH2-11EL-1
2040N-08V00-4WAYS	OSPP800001001800000000000	D1DW020BNJWX624	TH2-11ES
2040N-08V00-DL	OSPP800001002000001000000	D1DW020BNUW	TH2-11ES-1
2040N-08V00-LL	OSPP800001002000001000000	D1DW020BNUWC06X575	TH2-11M-10
2040N-08V00-P	OSPP800001003200000000000	D1DW020BVJW	TH2-11M-12
2040N-08V30	OSPP800001003200000000000	D1DW020BVUW	TH2-11M-16
2040N-10V00	OSPP800001003500000000000	D1DW020DNJW	TH2-11M-20
2040N-10V00-DL	OSPP800001003500000000000	D1DW020HNJW	TH2-11M-24
2040N-12V00	OSPP800010000300000000000	D1DW020HNJW4DC06X575	TH2-11M-32
2040N-12V00-DL	OSPP800010000300000000000	D1DW020HNJWI4NXG199	TH2-11M-4
2040N-12V00-P	OSPP800010000300001000000	D1DW020HNUW	TH2-11M-6
2040N-16V00	OSPP800010000300001000000	D1DW022C9NJW	TH2-11M-8
2040N-16V00-DL	OSPP800010001010004000000	D1DW022MNJW	TH2-12NK-1012
2040N-16V00-LL	OSPP800010001010004000000	D1DW030BNGWC06X575	TH2-12NK-1620
2040PM-OR	OSPP800010100460000000000	D1DW030BNJW	TH2-12NK-2432
2040SM-OR	OSPP800010100460000000000	D1DW069B9NJPTX939	TH2-12NK-8
2040TM-OR	OSPP800100001600000000000	D1DW069B9NJW	TH2-12NT-10
204-1000100-NT-100	OSPP800100001600000000000	D1DW069B9VJPTX939	TH2-12NT-12
204-1000100-NT-25MT	OSPP800100002850000000000	D1DW069B9VJW	TH2-12NT-16
204-1000100-NT-50	OSPP800100002850000000000	D1DW076KNJW	TH2-12NT-20

20411-02000	OSPP80010100104000000000	D1DW076KNUW	TH2-12NT-24
20411-02000	OSPP80010100104000000000	D1DW078ENJW	TH2-12NT-32
20423FIL	OSPP80011000220000500000	D1DW079CNJW	TH2-12NT-6
20423FIL	OSPP80011000220000500000	D1DW082CNJWC06X575	TH2-12NT-8
20425-00400	OSPP80020000012500020000	D1DW098KNJWC06X575	TH2-13-3PH
20425-00400	OSPP80020000012500020000	D1DW098KNJWI4NC06X575	TH2-13EL-1
20425FIL	OSPP80020000056000000000	D1DW101BNJW	TH2-13ES-1
20425FIL	OSPP80020000056000000000	D1DW101BNJWC06X575	TH2-13ET
20430FIL	OSPP80020000060000000000	D1DW101HNJWTI4NC06X575	TH2-13M-10
20430FIL	OSPP80020000060000000000	D1DW102ENJDLJ5	TH2-13M-12
20432FIL	OSPP80020000068000000000	D1DW102ENJW4DC06X575	TH2-13M-16
20432FIL	OSPP80020000068000000000	D1DW102ENJWC06X575	TH2-13M-20
20433FIL	OSPP80020000095000000000	D1DW102ENJWL	TH2-13M-24
20433FIL	OSPP80020000095000000000	D1FBA31FC0NJW0	TH2-13M-32
20434FIL	OSPP80020000096500100000	D1FBA31FC0NMW0	TH2-13M-8
20434FIL	OSPP80020000096500100000	D1FBA31FE0NMW0	TH22LMCF
20435FIL	OSPP80020000200000000000	D1FBA31HC0NJW0	TH22LMKDSCF
20435FIL	OSPP80020000200000000000	D1FBA31HC0NMW0	TH22LMKDSOMDCF
20436FIL	OSPP80020000220000000000	D1FBA31HE0NMW0	TH22LMOMDCF
20436FIL	OSPP80020000220000000000	D1FBA32FC0NJW0	TH22LR71
20438FIL	OSPP80020100150000000000	D1FBA32FC0NMW0	TH22LRCF
20438FIL	OSPP80020100150000000000	D1FBA32FE0NMW0	TH22LRKD71
20439FIL	OSPP80020100360000000000	D1FBA32HC0NJW0	TH22LRKDSCF
20439FIL	OSPP80020100360000000000	D1FBA32HC0NMW0	TH22LRKDSOMDCF
20440FIL	OSPP80020110260000000000	D1FBA32HE0NMW0	TH22LROMD71
20440FIL	OSPP80020110260000000000	D1FBA81HC0NJW0	TH22LROMDCF
20444FIL	OSPP80020110340000000000	D1FBB31FC0NF00	TH22ZLMKDSCF
20444FIL	OSPP80020110340000000000	D1FBB31FC0NJW0	TH22ZLRKDSCF
20446FIL	OSPP80021000050000020000	D1FBB31FC0NMW0	TH25SMCF
20446FIL	OSPP80021000050000020000	D1FBB31FC0NS00	TH25SMKDSOMDCF
20451FIL	OSPP80100000298400000000	D1FBB31FC0VMW0	TH25SRCF
20451FIL	OSPP80100000298400000000	D1FBB31FE0NMW0	TH25SRKDSCF
20452FIL	OSPP80300000120210500000	D1FBB31HC0NF00	TH25SRKDSOMDCF
20452FIL	OSPP80300000120210500000	D1FBB31HC0NG00	TH25SROMDCF
20453FIL	OSPP80600000126000000000	D1FBB31HC0NJW0	TH25ZSRKDSCF
20453FIL	OSPP80600000126000000000	D1FBB31HC0NMW0	TH28LMCF
20454FIL	OSPP80600000140000000000	D1FBB31HC0VMW0	TH28LMKDSOMDCF
20454FIL	OSPP80600000140000000000	D1FBB31HE0NMW0	TH28LR71
20456FIL	OSPP80600000140000500000	D1FBB32FC0NF00	TH28LRCF
20456FIL	OSPP80600000140000500000	D1FBB32FC0NJW0	TH28LRKD71
20457FIL	OSPP80600000190000000000	D1FBB32FC0NMW0	TH28LRKDSCF
20457FIL	OSPP80600000190000000000	D1FBB32FE0NMW0	TH28LRKDSOMDCF
20459FIL	OSPP80600000200000000000	D1FBB32HC0NF00	TH28LROMDCF
20459FIL	OSPP80600000200000000000	D1FBB32HC0NJW0	TH28ZLMKDSCF
20460FIL	OSPP80600000600000000000	D1FBB32HC0NMW0	TH28ZLRKDSCF
20460FIL	OSPP80600000600000000000	D1FBB32HE0NMW0	TH2-9-1PH
20462FIL	OSPP80600100500000400000	D1FBB60HC0NS00	TH2-9-3PH
20462FIL	OSPP80600100500000400000	D1FBE01CC0NF00	TH30SMCF
20463FIL	OSPP80600100532000000000	D1FBE01CC0NG00	TH30SMKDSOMDCF
20463FIL	OSPP80600100532000000000	D1FBE01CC0NJW0	TH30SRCF
20464FIL	OSPP80620000184000000000	D1FBE01CC0NMW0	TH30SRKDSOMDCF
20464FIL	OSPP80620000184000000000	D1FBE01CC0NMW0X921	TH30ZSRKDSCF
20465FIL	OSPP80620000200000000000	D1FBE01CC0NMW0X930	TH3-2-12VDC

20465FIL	OSPP80620000020000000000	D1FBE01CC0NS00	TH35LMKDSOMDCF
20466FIL	OSPP80C000000500000000000	D1FBE01CC0NW50	TH35LRCF
20466FIL	OSPP80C000000500000000000	D1FBE01CC0VMW0	TH35LRKDSCF
20467FIL	OSPP80C000000600000000000	D1FBE01CE0NMW0	TH35LRKDSOMDCF
20467FIL	OSPP80C000000600000000000	D1FBE01CK0NMW0	TH35LROMDCF
20468FIL	OSPP80C000000700000000000	D1FBE01CK0VMW0	TH38SMKDSOMDCF
20468FIL	OSPP80C000000700000000000	D1FBE01FC0NF00	TH38SRCF
20469FIL	OSPP80C000000830000000000	D1FBE01FC0NF00XG216	TH38SRKDSOMDCF
20469FIL	OSPP80C000000830000000000	D1FBE01FC0NF03	TH38SROMDCF
2046H-04V70	OSPP80C000000850000000000	D1FBE01FC0NG00	TH4-10
2046H-10V70	OSPP80C000000850000000000	D1FBE01FC0NJW0	TH42LMOMDCF
20471FIL	OSPP80C000000930000000000	D1FBE01FC0NJW0X930	TH42LRKDSOMDCF
20471FIL	OSPP80C000000930000000000	D1FBE01FC0NJW3	TH42ZLRKDSCF
20477FIL	OSPP80C000001300000000000	D1FBE01FC0NJW3XG091	TH4-4U
20477FIL	OSPP80C000001300000000000	D1FBE01FC0NKW3	TH4-7
20479FIL	OSPP80C000001450000000000	D1FBE01FC0NMW0	TH4-8
20479FIL	OSPP80C000001450000000000	D1FBE01FC0NS00	TH4-9
2047B	OSPP80C000001610000000000	D1FBE01FE0NF00	TH4-9-1
2047B	OSPP80C000001610000000000	D1FBE01FE0NJW0	TH4E-11
20480FIL	OSPPBG2500000001500000000	D1FBE01FE0NKW3	TH5-3
20480FIL	OSPPBG2500000001500000000	D1FBE01FE0NMW0	TH5-3-BM
20482FIL	OSPPBG2500000004000000000	D1FBE01FE0VJW0	TH6-10-EL-7
20482FIL	OSPPBG2500000004000000000	D1FBE01FK0NF00	TH6-10-HL-9-2
20486FIL	OSPPBG2500000009500000000	D1FBE01FK0NMW0	TH6-10-P10
20486FIL	OSPPBG2500000009500000000	D1FBE01GM0NJW3	TH6-10-P14
20488FIL	OSPPBG2500000010000000000	D1FBE01HC0NF00	TH6-10-P18
20488FIL	OSPPBG2500000010000000000	D1FBE01HC0NF00XG216	TH6-10-P22
20490FIL	OSPPBG2500000014000000000	D1FBE01HC0NF03	TH6-10-P26
20490FIL	OSPPBG2500000014000000000	D1FBE01HC0NG00	TH6-10-P33
20491FIL	OSPPBG2500010004040000000	D1FBE01HC0NJW0	TH6-10-P40
20491FIL	OSPPBG2500010004040000000	D1FBE01HC0NJW3	TH6-10-P50
20496FIL	OSPPBG2500011005000000T00	D1FBE01HC0NJW3XG091	TH6-10-P60
20496FIL	OSPPBG2500011005000000T00	D1FBE01HC0NKP5X950	TH6-6
20497FIL	OSPPBG2500040006500000000	D1FBE01HC0NKW3	TH6-7
20497FIL	OSPPBG2500040006500000000	D1FBE01HC0NMJ0XG020	TH6-7-30
20498FIL	OSPPBG2501100007000000000	D1FBE01HC0NMP5X950	TH6-7-55
20498FIL	OSPPBG2501100007000000000	D1FBE01HC0NMW0	TH7-12
204A-0580	OSPPBG2502000008000000000	D1FBE01HC0NMW0X944	TH7-13
204A-2468	OSPPBG2502000008000000000	D1FBE01HC0VMW0	TH7-14
204A-2713	OSPPBG250A000001701000000	D1FBE01HE0NF00	TH7-15
204A-2713-C	OSPPBG250A000001701000000	D1FBE01HE0NJW0	TH8E-380-BM
204A-2916	OSPPBG3200000003200000000	D1FBE01HE0NJW3XG091	TH8E-530
204A-2953	OSPPBG3200000003200000000	D1FBE01HE0NKW3	TH8E-530-12VDC
204A-2954	OSPPBG3200000006000000000	D1FBE01HE0NMW0	TH8E-530-BM
204A-2955	OSPPBG3200000006000000000	D1FBE01HE0NMW0XG091	TH8E-535-BM
204A-2956	OSPPBG3200000006500000000	D1FBE01HE0NW50	TI10
204A-2957	OSPPBG3200000006500000000	D1FBE01HK0NKW3	TI10E
204A-4610	OSPPBG3200000025000000000	D1FBE01HK0NMW0	TI10N
204B-3759	OSPPBG3200000025000000000	D1FBE01HK0VKW3	TI121/2
204KLAW10EEX	OSPPBG3200100005500000000	D1FBE01KC0NF03	TI13
204KLAW10EVX	OSPPBG3200100005500000000	D1FBE01KC0NF03XG216	TI13E
204KLAW10MEN	OSPPBG3202010019000000200	D1FBE01KC0NJW3	TI13N
204KLAW10MPN	OSPPBG3202010019000000200	D1FBE01KC0NKW3	TI163/4

204KLAW13EVX	OSPPBG4000000018000000000	D1FBE01KC0NS03	TI17
204KLAW13MPN	OSPPBG4000000018000000000	D1FBE01KE0NF03	TI17E
204KLAW13MVN	OSPPBG4000001006000000000	D1FBE01KE0NJW3	TI17N
204KLIW10EEX	OSPPBG4000001006000000000	D1FBE01KE0NKW3	TI21
204KLIW10EVX	OSPPBG4000001007000000000	D1FBE01KE0NKW3XG091	TI21E
204KLIW10MPN	OSPPBG4000001007000000000	D1FBE01KE0NS03	TI21N
204KLIW10MVN	OSPPBG4000010004000000000	D1FBE01KE0NS03XG216	TI26
204KLIW13EVX	OSPPBG4000010004000000000	D1FBE01KK0NF03	TI26E
204KLIW13MEN	OSPPBG4000010005000000000	D1FBE01KK0NJW3XG091	TI33
204KLIW13MPN	OSPPBG4000010005000000000	D1FBE01KK0NKW3	TI601/4
204KLIW13MVN	OSP-P-ET-25-000-01000-M	D1FBE02CC0NF00	TI651/4
20-4R6O4MXS	OSP-P-ET-25-000-01000-M	D1FBE02CC0NG00	TI651/4OV
20-4R6P4MLOS	OSP-P-ET-25-000-01400-M	D1FBE02CC0NJW0	TI653/8
20-4R6P4MXS	OSP-P-ET-25-000-01400-M	D1FBE02CC0NMW0	TI653/8OV
204SLAW10EVX	OSP-P-ET-25-C00-01800-M	D1FBE02CC0NMW0X930	TI701/4
204SLAW10MEN	OSP-P-ET-25-C00-01800-M	D1FBE02CC0NS00	TI701/4OV
204SLAW10MPN	OSP-P-ET-32-000-00800-M	D1FBE02CE0NMW0	TI701/8
204SLAW13EEX	OSP-P-ET-32-000-00800-M	D1FBE02FC0NF00	TI701/8OV
204SLAW13EVX	OSP-P-ET-32-000-00850-M	D1FBE02FC0NJW0	TI703/8
204SLAW13MPN	OSP-P-ET-32-000-00850-M	D1FBE02FC0NJW3	TI703/8OV
204SLIW10EEX	OSP-P-ET-32-002-00300-0	D1FBE02FC0NKW3	TI801/4
204SLIW10EVX	OSP-P-ET-32-002-00300-0	D1FBE02FC0NMW0	TI901/4
204SLIW10MPN	OSP-P-ET-50-002-00450-0	D1FBE02FC0NMW0X930	TI901/4OV
204SLIW10MVN	OSP-P-ET-50-002-00450-0	D1FBE02FC0NS00	TI903/8
204SLIW13EVX	OSP-P-ET-50-002-00600-0	D1FBE02FC0NW50	TI903/8OV
204SLIW13MEN	OSP-P-ET-50-002-00600-0	D1FBE02FC0VJW0	TI90M16
204SLIW13MPN	OSP-P-ET-63-002-00400-0	D1FBE02FE0NMW0	TI90M16OV
204SLIW13MVN	OSP-P-ET-63-002-00400-0	D1FBE02FK0NF00	TI93/8
20506-02000-01100-00900	OSP-P-ET-63-002-00600-0	D1FBE02HC0NF00	TI951/4
20506-02000-01100-00900	OSP-P-ET-63-002-00600-0	D1FBE02HC0NF03	TI951/4OV
20507-04000	OSP-P-ET-63-002-01000-0	D1FBE02HC0NG00	TI953/8
20507-04000	OSP-P-ET-63-002-01000-0	D1FBE02HC0NJW0	TI953/8OV
20508-04980	OSP-P-ET-63-002-01200-0	D1FBE02HC0NJW0X942	TIZ 10 (6)-SS
20508-04980	OSP-P-ET-63-002-01200-0	D1FBE02HC0NJW3	TIZ 10 (8)-B
2050FIL	OSV1766190	D1FBE02HC0NKW3	TIZ 10 (8)-SS
2050FIL	OSV1766190	D1FBE02HC0NMW0	TIZ 10 (8)-TI
20512FIL	OSV1835985	D1FBE02HC0NS00	TIZ 12 (10)-B
20512FIL	OSV1835985	D1FBE02HC0NS03	TIZ 12 (10)-SS
20513FIL	P.316102.B	D1FBE02HC0VKW3	TIZ 12 (8)-B
20513FIL	P.583201	D1FBE02HC0VMW0	TIZ 12 (8)-SS
20514FIL	P.623211	D1FBE02HE0NF00	TIZ 6 (4)-B
20514FIL	P.682802	D1FBE02HE0NJW0	TIZ 6 (4)-M
20516FIL	P.682802.P	D1FBE02HE0NMW0	TIZ 6 (4)-SS
20516FIL	P.694105	D1FBE02HE0NS00	TIZ 8 (6)-B
20517FIL	P.766101	D1FBE02HE0VMW0	TIZ 8 (6)-SS
20517FIL	P.982215	D1FBE02HK0NMW0	TJ0036UW080AAAB
20518FIL	P-0125	D1FBE02KC0NJE3EE	TJ0050UW080AAAB
20518FIL	P-0128	D1FBE02KC0NJW3	TJ0065UW080AAAB
20518FIL	P-0129	D1FBE02KC0NKE3EE	TJ0065UW080BBCP
20518FIL	P-0132SS	D1FBE02KC0NKW3	TJ0130UW080AAAB
20519FIL	P-0135SS	D1FBE02KC0NS03	TJ0165UW081AAAB
20519FIL	P-0139SS	D1FBE02KC0VF03	TJ0195UW080AAAB
20519FIL	P-0140CU	D1FBE02KE0NJW3	TJ0260US080AAAJ

20519FIL	P-0140SS	D1FBE02KK0NKW3	TJ0390UW080AABP
20520FIL	P-0144CU	D1FBE03CC0NMW0	TJ0390UW080AANE
20520FIL	P-0144SS	D1FBE03CE0NMW0	TJ0390UW080AAWB
20521FIL	P-0153	D1FBE03FC0NJW0	TJ0390UW081AABP
20521FIL	P01531	D1FBE03FC0NMW0	TJ0390UW081AANE
20522FIL	P01531	D1FBE03FE0NF00	TK012002A1
20522FIL	P01913	D1FBE03FE0NMW0	TK016001
20523FIL	P01913	D1FBE03HC0NMW0	TK019001
20523FIL	P-0194	D1FBE03HE0NMW0	TK019003
20524FIL	P01N10X1.25STS	D1FBE05HC0NF00	TK019004
20524FIL	P01N10X1STS	D1FBE05HC0NMW0	TK02507003
20525FIL	P01N12X1STS	D1FBE50CC0NJW0	TK0250K4360AAAB
20525FIL	P01N12X1STS-100	D1FBE50CC0NS00	TK0250K4640AAAB
20526FIL	P01N4X0.65STS	D1FBE50CC0VF00	TK0250K5360AAAB
20526FIL	P01N4X0.65STS-100	D1FCA31HC0NMW0	TK0250K5640AAAB
20527FIL	P01N6X1STS	D1FCE01CC0NMW0	TK0315K5640AAAB
20527FIL	P01N6X1STS-100	D1FCE01FC0NMW0	TK0400K4361AAAB
20528FIL	P01N8X1.25STS	D1FCE01HC0NMW0	TK0400K4640AAAB
20528FIL	P01N8X1STS	D1FCE02CC0NMW0	TK0400K5640AAAB
20-529842	P01N8X1STS/04	D1FCE02FC0NMW0	TK0400T5630AAAA
20-529842	P01N8X1STS-100	D1FCE02HC0NMW0	TK0400T5640AAAB
20529FIL	P01N8X1STS-500	D1FEE01HC9NB03	TK05
20529FIL	P-0216	D1FEE01KC9VB03	TK0500K5320AAAB
20530FIL	P-0270	D1FEE02KC9NB03	TK0500K5360AAAB
20530FIL	P-0270C	D1FPB31CC9NB00	TK0500K5640AAAA
20532FIL	P-0270CX	D1FPB31CC9NE00	TK0500K5640AAAB
20532FIL	P-0271	D1FPB31FC9NB00	TK0500K6640AAAB
20534FIL	P-0271C	D1FPB31GC9NS00	TK0500T4631AAAA
20534FIL	P-0271C150	D1FPB31GC9NS50	TK05A
20535FIL	P-0272	D1FPB31HC9NB00	TK0630K4361AAAB
20535FIL	P-0281	D1FPB31MC9NB00	TK0630K5320AAAB
20536FIL	P-0282	D1FPB31MC9NE00	TK0630K5360AAAA
20536FIL	P-0285	D1FPB32CC9NB00	TK0630K5640AAAB
20537FIL	P-0286	D1FPB32FC9NB00	TK0800K4640AAAB
20537FIL	P-0287	D1FPB32GC9NS00	TK0800K5360AAAB
20538FIL	P-0288	D1FPB32HC9NB00	TK0800K5640AAAB
20538FIL	P-0289	D1FPB32MC9NB00	TK10
20539FIL	P-0300	D1FPB32MC9NB50	TK10003000
20539FIL	P-0323	D1FPB32MC9NE50	TK1000K5640AAAB
20540FIL	P03N4X0.65STS-100	D1FPB32MC9NS00	TK10A
20540FIL	P03N6X1STS	D1FPB32MC9VB00	TK13
20541FIL	P03N6X1STS-100	D1FPB60CA9VB00	TK13A
20541FIL	P03N8X1STS	D1FPB60CB9NB00	TK13N
20542FIL	P03N8X1STS-100	D1FPB60FB9NB00XG183	TK1405
20542FIL	P04082	D1FPB60GB9NB00	TK1407
20543FIL	P04082	D1FPB60HB9NB00	TK1409
20543FIL	P-0426SS	D1FPB60HH9NB00	TK1411
20544FIL	P-0439	D1FPB60HJ9NS00	TK1413
20544FIL	P-0448	D1FPB60MA9NB00	TK1415
20545FIL	P-0453	D1FPB60MA9VB00	TK1416
20545FIL	P-0461	D1FPB60MB9NB00	TK1418
20546FIL	P-0466	D1FPB60MB9NB00XG183	TK1422
20546FIL	P-0467	D1FPB60MB9NS00	TK1423

20547FIL	P-0468-CG	D1FPE01BC9NB00	TK1427
20547FIL	P-0478-CG	D1FPE01BC9NB00X956	TK1428
20548FIL	P-0479-CG	D1FPE01BC9NB50	TK1432
20548FIL	P-0480-CG	D1FPE01BC9NE00	TK1434
20549FIL	P-0481-CG	D1FPE01BC9NE50	TK1436
20549FIL	P-0482B-CG	D1FPE01BC9NS00	TK1438
20550FIL	P-0482-CG	D1FPE01BC9NS50	TK1446
20550FIL	P-0483B-CG	D1FPE01CC9NB00	TK1450
20550JFIL	P-0483-CG	D1FPE01CC9NB50	TK1453
20550JFIL	P-0487B-CG	D1FPE01CC9NE00	TK1454
20551FIL	P-0487-CG	D1FPE01CC9NE50	TK1455
20551FIL	P-0488B-CG	D1FPE01CC9NS00	TK1460
20552FIL	P-0488-CG	D1FPE01FC9NB00	TK1466
20552FIL	P-0489B-CG	D1FPE01FC9NB50	TK1469
20553FIL	P-0489-CG	D1FPE01FC9NE00	TK1470
20553FIL	P-0490-CG	D1FPE01FC9NS00	TK1473
20554FIL	P-0492	D1FPE01HC9NB00	TK1474
20554FIL	P-0499-CG	D1FPE01HC9NB00X956	TK1475
20556FIL	P04N4X0.65STS-25	D1FPE01HC9NB50	TK1476
20556FIL	P-0500	D1FPE01HC9NB70	TK1478
20558FIL	P-0551	D1FPE01HC9NE00	TK1479
20558FIL	P-0557	D1FPE01HC9NS00	TK1482
20559FIL	P05-601-575	D1FPE01MC9NB00	TK1484
20559FIL	P05-601-575	D1FPE01MC9NB00X956	TK1486
20-561527	P05-601-576	D1FPE01MC9NB50	TK1487
20-561527	P05-601-576	D1FPE01MC9NB70	TK1488
20-561528	P-0561	D1FPE01MC9NE00	TK1489
20-561528	P-0562	D1FPE01MC9NS00	TK1490
20-561577	P05N4X0.65STS	D1FPE01MC9NS50	TK1491
20-561577	P05N4X0.65STS-100	D1FPE01MC9VB00	TK1492
20562FIL	P05N6X1STS	D1FPE02BC9NB00	TK1493
20562FIL	P05N6X1STS-100	D1FPE02BC9NE50	TK1494
20564FIL	P05N8X1STS	D1FPE02CC9NB00	TK1495
20564FIL	P05N8X1STS-100	D1FPE02CC9NB50	TK1496
20566FIL	P-0650	D1FPE02CC9NE00	TK1497
20566FIL	P-0677	D1FPE02CC9NS50X956	TK1498
20574FIL	P-0679	D1FPE02FC9NB00	TK17
20574FIL	P-0680	D1FPE02FC9NB50	TK17A
20578FIL	P-0683	D1FPE02FC9NS00	TK-M10NUT
20578FIL	P-0685	D1FPE02FC9NS50X956	TK-M5NUT
20580FIL	P-0713	D1FPE02HC9NB00	TK-M6NUT
20580FIL	P-0714	D1FPE02HC9NB50	TKW132HFKCB2R1000
205A-2649	P-0727	D1FPE02HC9NS00	TKY-W-6X4
205A-2656	P-0729	D1FPE02HC9NS50X956	TKY-W-6X4
205A-2658	P-0732	D1FPE02MC9HB00	TL012010
205A-2713	P-0736	D1FPE02MC9NB00	TL019006
205A-2916	P-0759	D1FPE02MC9NB50	TL0240US080AAAB
205A-4467	P-0762	D1FPE02MC9NE00	TL0240US080AAAF
205A-4610	P-0764	D1FPE02MC9NS00	TL0280US080AAAB
205B-4929	P-0766	D1FPE02MC9NS00XG075	TL03601W1C0LABG
205B-6908	P-0776	D1FPE02MC9NS50X956	TL03601W1C0LACT
2060-4634	P-0794	D1FPE02MC9VB00	TL03601W1C1LABG
2060-6184	P07N4X0.65STS-100	D1FPE50BA9NB00	TL0360US081AAAA

2060-6281	P07N6X1STS	D1FPE50BA9NB50	TL0360UW080AANE
20606FIL	P07N6X1STS-100	D1FPE50BA9NE00	TL0360UW081AANE
20606FIL	P07N8X1STS	D1FPE50BA9NS00	TL12013
20606FIL	P07N8X1STS-100	D1FPE50BA9NS50	TL12016
20606FIL	P-0803	D1FPE50BB9NB00	TL1216
2060-7037	P-0804	D1FPE50BB9NS00	TL1619
2060-7038	P-0805	D1FPE50BH9NB00	TL2019
20607FIL	P-0808	D1FPE50BJ9NB00	TL2019OV
20607FIL	P-0810	D1FPE50BJ9NS00	TL-2-220
20608FIL	P08-2	D1FPE50CA9NB00	TL-4-119
20608FIL	P-0825	D1FPE50CA9NB50	TL-4-200
2060-9461	P-0829	D1FPE50CA9NE00	TL5019
2060FIL	P08-3	D1FPE50CA9NE50	TL5019OV
2060FIL	P-0830	D1FPE50CA9NS00	TL6010
206-12	P-0831	D1FPE50CA9NS50	TL6510
206-16	P-0832	D1FPE50CB9NB00	TL6510OV
206168-F	P-0833	D1FPE50CB9NB50	TL6510OVSL
206168-F-V	P-0837	D1FPE50CB9NE00	TL6510SL
206168-H	P-0838	D1FPE50CB9NE00X807	TL7006
206168-H-V	P08-3C	D1FPE50CB9NS00	TL7006OV
206168-M	P08-4	D1FPE50CB9NS50	TL7006OVSL
206168-M-V	P-0840	D1FPE50CH9NB00	TL7006SL
206168-W	P-0841	D1FPE50CH9NE00	TL7010
206168-W-V	P-0844	D1FPE50CJ9NB00	TL7010OV
206168-W-V-X884	P-0847	D1FPE50FA9NB00	TL7010OVSL
206176-F	P-0848	D1FPE50FA9NB00XG183	TL7010SL
206176-F-V	P-0853	D1FPE50FA9NB50	TL8008
206176-H	P-0854	D1FPE50FA9NE00	TL8010
206176-M	P-0855	D1FPE50FA9NE50	TL8010-PL
206176-M-V	P-0857	D1FPE50FA9NS00	TL8012
206176-W	P-0858	D1FPE50FA9NS50	TL8012-PL
206176-W-V	P-0860	D1FPE50FB9NB00	TL9013
206-20	P-0861	D1FPE50FB9NB00XG183	TL9013OV
206-24	P-0863	D1FPE50FB9NE00	TL9013OVSL
206-32	P-0864	D1FPE50FB9NE00X807	TL9013SL
206-4	P-0865	D1FPE50FB9NS00	TL912
206-40	P-0867	D1FPE50FB9NS00X999	TL9510
206-5	P-0868	D1FPE50FB9NS00XG030	TL9510OV
206-6	P-0870	D1FPE50FB9NS50	TL9510OVSL
20-665373	P-0874	D1FPE50FH9NB00	TL9510SL
20-665373	P-0875	D1FPE50FJ9NB00	TL9513
20-665374	P-0877	D1FPE50FJ9NB70	TL9513OV
20-665374	P-0878	D1FPE50GB9NB00	TL9513OVSL
20-665715	P-0880	D1FPE50GB9NS70	TL9513SL
20-665715	P-0881	D1FPE50GH9NB00	TLS10
20-665716	P-0883	D1FPE50HA9NB00	TLS10-8
20-665716	P-0885	D1FPE50HA9NB00XG183	TLS12
20-665717	P-0886	D1FPE50HA9NB50	TLS16
20-665717	P-0887	D1FPE50HA9NE00	TLS16-15
20-665718	P-0896	D1FPE50HA9NS00	TLS20
20-665718	P-0914	D1FPE50HA9VS00	TLS20-18
206-8	P-0928	D1FPE50HB9HB00	TLS25
20690-4-4C	P-0931	D1FPE50HB9NB00	TLS25-22

206A-2648	P-0932	D1FPE50HB9NB00XG183	TLS32
206A-2649	P-0934	D1FPE50HB9NB50	TLS32-28
206A-2656	P-0950	D1FPE50HB9NE00X807	TLS32-30
206A-2713	P-0979	D1FPE50HB9NS00	TLS38
206A-2916	P-10011	D1FPE50HH9NB00	TLS50
206A-2954	P-10044	D1FPE50HH9NE00	TLS6
206A-2955	P-10045	D1FPE50HJ9NB00	TLS6-8
206KLAW13MPN	P-10074CX	D1FPE50HJ9NB70	TLS8
206KLAW17EEX	P-10075CX	D1FPE50MA9HS00	TLSS10
206KLAW17EVX	P-10076	D1FPE50MA9NB00	TLSS12
206KLAW17MEN	P10-2	D1FPE50MA9NB00XG183	TLSS32-30
206KLAW17MPN	P-1025	D1FPE50MA9NB50	TLSS6
206KLAW17MVN	P-1028	D1FPE50MA9NE00	TLT
206KLAW21EEX	P1028PA01SRM5AT02R000PB00	D1FPE50MA9NS00	TM10020
206KLAW21EVX	P10-2V	D1FPE50MA9NS00XG075	TM10021
206KLAW21MPN	P10-3A	D1FPE50MA9NS00XG109	TM-101-SP
206KLAW21MVN	P10-3C	D1FPE50MA9NS50	TM-103-SP
206KLIW13MEN	P10-4	D1FPE50MA9VB00	TM-133-SP
206KLIW13MVN	P1060PS01SRM5AL00S000PB00	D1FPE50MA9VE00	TM-138-SP
206KLIW17EEX	P1060PS01SRM5AL00T00Q0000	D1FPE50MB9HB00	TM-139-SP
206KLIW17EKX	P-1066	D1FPE50MB9HB70L00	TM-158-SP
206KLIW17EVX	P1075PA02SRM5AL20S0000000	D1FPE50MB9HB70L63	TM160X2,5X20
206KLIW17MEN	P1075PC01SRM5AL00S0000000	D1FPE50MB9HB70L63XG028	TM-187-SP
206KLIW17MPN	P1075PC01SRM5AL00S1000000	D1FPE50MB9HB70L80XG028	TM-204-SP
206KLIW17MVN	P-1085	D1FPE50MB9HB70P50	TM-206-SP
206KLIW21EEX	P-1106	D1FPE50MB9HB70Q50	TM-210K
206KLIW21EVX	P-1108	D1FPE50MB9HE00X807	TM-214K
206KLIW21MPN	P-1109	D1FPE50MB9NB00	TM-215-SP
206KLTF10MEN	P-1112	D1FPE50MB9NB00XG183	TM-218-SP
206KLTS10MEN	P-1117	D1FPE50MB9NB50	TM-219-SP
206SLAW13MPN	P-1125	D1FPE50MB9NB70Q40	TM-220-SP
206SLAW17EEX	P-1126	D1FPE50MB9NE00	TM-226-SP
206SLAW17EVX	P1140XA01SLM5AXY2T00BPB00	D1FPE50MB9NE00X807	TM-249-SP
206SLAW17MEN	P-1158	D1FPE50MB9NE50	TM-258K
206SLAW17MPN	P-1165	D1FPE50MB9NS00	TM-261-SP
206SLAW17MVN	P-1211	D1FPE50MB9NS50	TM4-2B
206SLAW21EEX	P-1240	D1FPE50MB9VB00	TM4-2R
206SLAW21EVX	P-1247	D1FPE50MN9NB00XG281	TM4B
206SLAW21MPN	P-1254	D1FPE55CA9NB00	TM4R
206SLAW21MVN	P-1255	D1FPE55CB9NB00	TM6-2B
206SLIW13MEN	P-1262	D1FPE55FB9NB00	TM6-2R
206SLIW13MVN	P-1264	D1FPE55FH9NB00	TM6B
206SLIW17EEX	P-1265	D1FPE55HA9NB00	TM6R
206SLIW17EVX	P-1266	D1FPE55HA9NB50	TM8-2B
206SLIW17MEN	P-1267	D1FPE55HA9NS00	TM8-2R
206SLIW17MPN	P-1269	D1FPE55HB9NB00	TM8B
206SLIW17MVN	P-1275	D1FPE55HH9NB00	TM8R
206SLIW21EEX	P-1278	D1FPE55MA9NB00	TMA/TMB1/4571X
206SLIW21EVX	P-1280	D1FPE55MB9NB00	TMA/TMB1VERZX
206SLIW21MEN	P12-C2-A000	D1FPE55MB9NS00	TMB10A
206SLIW21MPN	P12-C2-A000	D1FPE55MN9NB00XG281	TMB12A
206SLTF10MEN	P12-C2-D000	D1FVE02BCVF0A	TMB14A
206SLTS10MEN	P12-C2-D000	D1FVE02BCVG0A	TMB16A

20-6TRTXS	P12-C3-F000	D1FVE02BCVLB	TMB24571X
2070-4015	P12-C3-F000	D1FVE02BCVLW	TMB2VZX
2070-7037-C	P12N6X1STS	D1FVE02BCVLWX726	TMB2X
20788-00500	P12N6X1STS-100	D1FVE02BCVXW	TMB4A
20788-00500	P12N8X1STS	D1FVE02CC0NJW3	TMB6A
20789-00640	P12N8X1STS-100	D1FVE02CC0NKW3	TMB8A
20789-00640	P-1300	D1FVE02CC0NL03	TMBR-8
20792FIL	P-1309	D1FVE02CC0NM03	TMBR9
20792FIL	P-1311	D1FVE02CC0NW53	TMC120B
20794-01750	P-1312	D1FVE02CC0VF03	TMC120R
20794-01750	P-1313	D1FVE02CC0VJW3	TMC120S
20794139B	P-1315	D1FVE02CC0VKW3	TMC14571X
20796-00130	P-1385	D1FVE02CC0VKW3X726	TMC1VZX
20796-00130	P-1391	D1FVE02CC0VS03	TMC44571X
20796-00580	P15-02-000	D1FVE02CE0NKE3EE	TMC4VZX
20796-00580	P15-02-000	D1FVE02CE0VKW3	TMC80B
20796FIL	P-1524	D1FVE02CK0NKW3	TMC80R
20796FIL	P-1558	D1FVE02DC0VJW3	TMC80S
20797-00370	P-1599	D1FVE02DC0VKW3	TMCAP-8
20797-00370	P15-C2-000	D1FVE50BCVLB	TMDC1
20797-00820	P15-C2-000	D1FVE50BCVLBX726	TMDC1C-SP
20797-00820	P15-C3-000	D1FVE50BCVLBX826	TMDC1Q
20797-01215	P15-C3-000	D1I/DOL	TMDC2Q
20797-01215	P15-C4-000	D1MW001CNJA	TMDC2-SP
20797FIL	P15-C4-000	D1MW001CNJA91X868	TMDC3
20797FIL	P16-03-L00	D1MW001CNJAP	TMDC3Q
20798-00150	P16-03-L00	D1MW001CNJAT	TMEF2-00
20798-00150	P16-04-H00	D1MW001CNJJW1P	TMEF2-SP
20798FIL	P16-04-H00	D1MW001CNJW1P	TMEM2-P6-00
20798FIL	P-1605	D1MW001CNJW1PX624	TMEM2-P6-SP
20799-00400	P-1606	D1MW001CNJWW	TMEM2-P7-00
20799-00400	P-1607	D1MW001CNJWW1P	TMEM2-P7-SP
20799-00500	P-1614	D1MW001CNKA	TMFC3333
20799-00500	P-1633	D1MW001CNKA91X868	TMFC3333A
20799-01000	P-1638	D1MW001CNKAS3	TMFC3333AAR
20799-01000	P-1639	D1MW001CNTWW	TMFC3333B
20799-01320	P-1640	D1MW001CNTWWX624	TMFC3333BBR
20799-01320	P-1641	D1MW001CNYWW	TMFC3333Q
20799FIL	P-1642	D1MW001CNYWWX624	TMFC3333QA
20799FIL	P-1643	D1MW001CVJW1P	TMFC3333QAAR
207A-2649	P-1645	D1MW001ENJW1P	TMFC3333QB
207A-2916	P-1650	D1MW001ENJWW	TMFC3333QBBR
207ACBH-2	P-1652	D1MW001KNKA	TMFC3333R
207ACBH-4	P-1655	D1MW001MNJW1P	TMFC33WB
207ACBH-6	P-1656	D1MW002CNJA	TMFC33WBBR
207ACBH-8	P-1658	D1MW002CNJW1P	TMFC33YB
207B-0599	P-1659	D1MW002CNJWW	TMFC33YBBR
207B-4929	P-1661	D1MW002CNKA	TMFC5533
207P-2	P-1662	D1MW002CVKJ	TMFC5533A
207P-4	P-1664	D1MW002ENJJW1P	TMFC5533AAR
207P-6	P-1665	D1MW002ENJW1P	TMFC5533B
207P-8	P-1666	D1MW002ENJW1PX5056	TMFC5533BBR
20-8 F5OG5-S	P-1667	D1MW002ENJWW	TMFC5533Q

20804-01000	P-1668	D1MW002ENKA	TMFC5533R
20804-01000	P-1669	D1MW002ENTWW	TMFC5555
2080-6281	P-1670	D1MW002ENYWW	TMFC5555A
20806FIL	P-1671	D1MW002KNJA	TMFC5555AAR
20806FIL	P-1672	D1MW004CNJA	TMFC5555B
2080-7037-C	P-1673	D1MW004CNJA91X868	TMFC5555BBR
20807FIL	P-1674	D1MW004CNJAP	TMFC5555Q
20807FIL	P-1678	D1MW004CNJAWX921	TMFC5555R
20808FIL	P-1679	D1MW004CNJJ1P	TMFC555W
20808FIL	P-1680	D1MW004CNJJW	TMFC555WB
20809FIL	P-1681	D1MW004CNJW1P	TMFC555Y
20809FIL	P-1682	D1MW004CNJW1PX5056	TMFC555YA
20810FIL	P-1683	D1MW004CNJWS21P	TMFC555YB
20810FIL	P-1685	D1MW004CNJWW	TMFC555YBBR
20811FIL	P-1686	D1MW004CNJWW1P	TMFC55B
20811FIL	P-1687	D1MW004CNKJ1P	TMFC55BBR
20812FIL	P-1688	D1MW004CNKJ91X868	TMFC55QB
20812FIL	P-1689	D1MW004CNKW1P	TMFC55QBBR
20813FIL	P-1690	D1MW004CNTWW	TMFC55WB
20813FIL	P-1691	D1MW004CNYWW	TMFC55WBBR
20814FIL	P16-C2-000	D1MW004CNYWWX624	TMFC55YB
20814FIL	P16-C2-000	D1MW004ENJW1P	TMFC55YBBR
20815FIL	P16-C2-H00	D1MW004ENJWW	TMFC5Y33A
20815FIL	P16-C2-H00	D1MW004KNJJ1P	TMFC5Y33B
20816FIL	P16-C2-L00	D1MW005CNKA91X868	TMFC5Y33BBR
20816FIL	P16-C2-L00	D1MW006CNJWW	TMFC7753B
20817FIL	P16-C2-LN0	D1MW006ENJA	TMFC7753BBR
20817FIL	P16-C2-LN0	D1MW008CNJA	TMFC7755
20818FIL	P16-C3-H00	D1MW008CNJJ1P	TMFC7755A
20818FIL	P16-C3-H00	D1MW008CNJW1P	TMFC7755AAR
20819FIL	P16-C4-000	D1MW008CNKJ91X868	TMFC7755B
20819FIL	P16-C4-000	D1MW008CNKW1P	TMFC7755Q
20-8-20JMTXS	P16-C4-H00	D1MW008CVKJ	TMFC7755QA
20821FIL	P16-C4-H00	D1MW009CNJA91X868	TMFC7755QBBR
20821FIL	P16-C4-L00	D1MW009CNKA	TMFC7755QR
20822FIL	P16-C4-L00	D1MW015MNKWW	TMFC7755R
20822FIL	P16-C4-V00	D1MW020BNJA	TMFC775W
20829-04000	P16-C4-V00	D1MW020BNJAP	TMFC775WAAR
20829-04000	P16N6X0.85/68	D1MW020BNJJ1P91X864	TMFC775WBBR
20829-08500	P17-02-B00	D1MW020BNJW1P	TMFC775WR
20829-08500	P17-02-B00	D1MW020BNJWW	TMFC775Y
20833FIL	P17-02-F00	D1MW020BNKW1P91X864	TMFC775YBBR
20833FIL	P17-02-F00	D1MW020BNTWW	TMFC775YR
20834FIL	P-1718	D1MW020BVKJ	TMFC77B
20834FIL	P-1719	D1MW020DNJW1P	TMFC77BBR
20837FIL	P-1720	D1MW020DVJWW	TMFC77QB
20837FIL	P-1722	D1MW020DVTWW	TMFC77QBBR
20837FIL	P-1723	D1MW020HNJW1P	TMFC77W3
20837FIL	P-1724	D1MW020HNJW1PX5056	TMFC77W3BBR
20838FIL	P-1725	D1MW020HNJWI4N1PXG199	TMFC77W3R
20838FIL	P-1726	D1MW020HNJWW	TMFC77Y3
20840FIL	P-1726CX	D1MW020HNKA	TM-FMP2
20840FIL	P-1727	D1MW021CNJJW1P	TM-FMP3K

20841FIL	P-1728	D1MW022CNJW1PX624	TM-FMP4K
20841FIL	P-1729	D1MW026BNJWW	TM-FMP5K
20842FIL	P-1730	D1MW026BNSWWXG170	TM-FMP6K
20842FIL	P-1731	D1MW026BNTWW	TMG-M12
20846-00550	P-1732	D1MW030BNJW1P	TM-L02A-SP
20846-00550	P-1733	D1MW030BNJWW	TM-L02BBR-SP
20846-00900	P-1734	D1MW030HNJWW	TM-L02-SP
20846-00900	P-1736	D1MW079CNJA91X868	TM-L03BBR-SP
20846-02600	P-1738	D1MW079MNJJ	TM-L03B-SP
20846-02600	P-1740	D1MW083BNJW1P91X864	TM-L12BBR-SP
20846-03400	P17408	D1MW083HVJWW	TM-L12B-SP
20846-03400	P17414	D1MW083HVTWW	TMM8KS13
20849FIL	P17418	D1MW086CNJW1P	TMM8NS13
20849FIL	P17422	D1SE30BNGW	TMMC3333
20850FIL	P17432	D1SE30BNJW	TMMC3333Q
20850FIL	P17438	D1SE30BNKW	TMMC33W
20851FIL	P-1744	D1SE30BNUW	TMMC33Y
20851FIL	P-1745	D1SE30BVGW	TMMC55
20855-00165	P-1746-1	D1SE30BVJW	TMMC5533
20855-00165	P-1747	D1SE83BNGW	TMMC5533Q
20855-00324	P-1748	D1SE83BNJW	TMMC5555
20855-00324	P-1749	D1SE83BNJWX952	TMMC555W
20855-00363	P-1750	D1SE83BNKW	TMMC555Y
20855-00363	P-1752	D1SE83BNUW	TMMC55Q
20855-00402	P-1753	D1SE83BVGW	TMMC55W
20855-00402	P-1755	D1SE83BVJW	TMMC55Y
20855-00442	P-1758	D1VA001CN4L	TMMC5W33
20855-00442	P-1759	D1VA002CN4L	TMMC5Y33
20855-00480	P-1761	D1VA004CN4L	TMMC77
20855-00480	P-1764	D1VA009CN4L	TMMC7753
20856-00100	P-1765	D1VA020BN4L	TMMC7755
20856-00100	P-1766	D1VA020DN4L	TMMC7755Q
20856-00150	P-1767	D1VC001EN4M	TMMC775W
20856-00150	P-1768	D1VC020BN4M	TMMC775Y
20856-00200	P-1769	D1VC020HN4M	TMMC77Q
20856-00200	P-1771	D1VC030BN4M	TMMC77W3
20856-00250	P-1773	D1VD020BN4M	TMMC77Y3
20856-00250	P-1776	D1VL001CN1P4J	TMN120B
20856-00300	P-1777	D1VL001CN4J	TMN120R
20856-00300	P-1779	D1VL001CN4K	TMN120S
20856-00430	P-1780	D1VL001CV4J	TMN80B
20856-00430	P-1781	D1VL001KN4J	TMN80R
20856-00500	P-1783	D1VL001NN4J	TMN80S
20856-00500	P-1784	D1VL001NN4K	TMPC3333
20856-00600	P-1785	D1VL001RN4J	TMPC3333Q
20856-00600	P-1786	D1VL002CN4J	TMPC5555Q
20856-00900	P-1787	D1VL002CN4K	TMPC555-SP
20856-00900	P-1788	D1VL002NN1P4J91XG187	TMPC77
20856-01000	P-1790	D1VL002NN4J	TMPC77Q
20856-01000	P-1791	D1VL002NN4K	TMRG-8
20856-02000	P-1792	D1VL002RN4J	TMRG-9
20856-02000	P-1793	D1VL002SN4J	TMW304LEK22UPR1022
20857-00200	P-1795	D1VL004CN4J	TMW306LBC30RPR1020

20857-00200	P-1796	D1VL004CN4K	TMW30ALJK22UPR1019
20857-00350	P-1797	D1VL004CN4K1P	TMW30ALQB00UZR8012
20857-00350	P17-C2-B00	D1VL004EN4J	TMW408LBK30UPR1018
20857-00450	P17-C2-B00	D1VL004NN4J	TN1201/2
20857-00450	P17-C2-F00	D1VL004NN4K	TN1203/4
20857-00500	P17-C2-F00	D1VL004NN4K1P	TN1203/8
20857-00500	P17-C2-FH0	D1VL004NN4KC999912	TN121/2
20857-01060	P17-C2-FH0	D1VL009CN4J	TN121/2V
20857-01060	P-1814	D1VL009CN4K	TN123/4
20857-01196	P-1828	D1VL009CV4J	TN123/4V
20857-01196	P-1830	D1VL009EN4J	TN123/8
20857-01310	P-1831	D1VL009KN4J	TN123/8V
20857-01310	P-1834	D1VL009NN4J	TN154CFX
20857-01422	P-1835	D1VL009NN4K	TN161/1V
20857-01422	P-1836	D1VL009NV4J	TN163/4
20857-01474	P-1837	D1VL009SN4J	TN163/4V
20857-01474	P-1840	D1VL020BN4J	TN201/2
20857-01525	P-1842	D1VL020BN4K	TN2013
20857-01525	P-1844	D1VL020DN4J	TN2019
20857-01710	P-1851	D1VL020DN4K	TN2021/500
20857-01710	P-1852	D1VL020DN4K1P	TN2021/800
20857-02010	P-1866	D1VL020HN4J	TN203/4
20857-02010	P-1877	D1VL020HN4K	TN203/4V
20857-02210	P-1878	D1VLB001CN4J	TN20M24
20857-02210	P-1879	D1VLB001EN4J	TN20M24V
20857-02610	P-1892	D1VLB001NN4J	TN501/2
20857-02610	P-1893	D1VLB002CN4J	TN5019
20857-03011	P-1894	D1VLB002CN4K	TN503/4
20857-03011	P19-02-A00	D1VLB002EN4J	TN601/4
20858-00630	P19-02-A00	D1VLB002NN4J	TN601/4/100
20858-00630	P19-02-H00	D1VLB002SN4J	TN601/4/50
20858-00700	P19-02-H00	D1VLB004CN4J	TN601/8
20858-00700	P-1917	D1VLB004CN4K	TN601/8/100
20858-00850	P-1918	D1VLB004CV4J	TN601/8/50
20858-00850	P-1948	D1VLB004NN4J	TN6010
20858-00900	P-1987	D1VLB006NN4J	TN603/8
20858-00900	P-1988	D1VLB009CN4J	TN60DB
20858-01035	P-1995	D1VLB009CV4J	TN6508/100
20858-01035	P-1998	D1VLB009EN4J	TN6508/63
20858-01300	P-1999	D1VLB009KN4J	TN651/4
20858-01300	P19-C2-A00	D1VLB009NN4J	TN651/4/100
20858-01475	P19-C2-A00	D1VLB020BN4J	TN651/4INOX
20858-01475	P19-C2-C00	D1VLB020BV4J	TN651/4V
20858-01530	P19-C2-C00	D1VLB020DN4J	TN651/8
20858-01530	P19-C2-D00	D1VLB020DN4K1P	TN651/8/100
20858-01750	P19-C2-D00	D1VLB020DV4J	TN651/8INOX
20858-01750	P19-C2-H00	D1VLB020HN4K	TN6510
20858-02050	P19-C2-H00	D1VLB042CN4J	TN6510/120
20858-02050	P19N6X1STS	D1VLB042CN4K	TN6510/240
20859-01085	P19N6X1STS-100	D1VP001CN90	TN6510/360
20859-01085	P-1A1-25	D1VP001CV90	TN653/8
20859-01525	P-1A1-50	D1VP001FN4L	TN65M10
20859-01525	P1A-2CCB	D1VP001FN90	TN65M10INOX

20860-00180	P1A-2CCB	D1VP002CN90	TN65M12
20860-00180	P1A-2DCB	D1VP004CN90	TN65M14
20860-00350	P1A-2DCB	D1VP008CN90	TN65M14V
20860-00350	P1A-2FCC	D1VP009CN4L	TN65M8
20862-01730	P1A-2FCC	D1VP009EN90	TN65M8INOX
20862-01730	P1A-2HCB	D1VP009KN90	TN701/4
20864-00150	P1A-2HCB	D1VP015CN90	TN701/4/100
20864-00150	P1A-2JCC	D1VP016FN90	TN701/4V
20864-00200	P1A-2JCC	D1VP020AV90	TN701/8
20864-00200	P1A-2XMK	D1VP020BN4L	TN701/8/100
20864-00500	P1A-2XMK	D1VP020BN90	TN7010
20864-00500	P1A-2XML	D1VP020BN90XG057	TN7010/100
20865-00050	P1A-2XML	D1VP020BN90XG058	TN7010/150
20865-00050	P1A-2XMP	D1VP020DN90	TN7010/250
20865-00350	P1A-2XMP	D1VP020HN90	TN703/8
20865-00350	P1A-4CMB	D1VP026DN4L	TN70M10
20865-00870	P1A-4CMB	D1VP026HN90XG126	TN801/4
20865-00870	P1A-4CMF	D1VP026HV90XG126	TN801/4/100
20866-00700	P1A-4CMF	D1VP030BN4L	TN801/4/150
20866-00700	P1A-4CMJ	D1VP030BN90	TN801/4/200
20866-01500	P1A-4CMJ	D1VP030DN90	TN801/4/50
20866-01500	P1A-4CMJZ	D1VP030HN90	TN801/8
20866-04267	P1A-4CMJZ	D1VP069BV90X717	TN801/8/100
20866-04267	P1A-4CMT	D1VP209KN90X864	TN801/8/150
20867-00100	P1A-4CMT	D1VW001ANJW	TN801/8/50
20867-00100	P1A-4CRC	D1VW001ANJW91X908	TN803/8
20867-00325	P1A-4CRC	D1VW001CNAW	TN80M10
20867-00325	P1A-4CRS	D1VW001CNGW	TN901/4
20867-00700	P1A-4CRS	D1VW001CNGWS3	TN901/4/100
20867-00700	P1A-4DMB	D1VW001CNGWT	TN901/4INOX
20867-01000	P1A-4DMB	D1VW001CNGWX651	TN901/4V
20867-01000	P1A-4DMF	D1VW001CNJD	TN901/8
20867-01200	P1A-4DMF	D1VW001CNJDJ5	TN9010
20867-01200	P1A-4DMJ	D1VW001CNJDL	TN9013
20867-01900	P1A-4DMJ	D1VW001CNJDLJ5	TN9014/150
20867-01900	P1A-4DMJZ	D1VW001CNJEE	TN9014/300
20874-00450	P1A-4DMJZ	D1VW001CNJEEP	TN9014/450
20874-00450	P1A-4DMT	D1VW001CNJEEXG013	TN903/8
20874-00710	P1A-4DMT	D1VW001CNJG	TN903/8/100
20874-00710	P1A-4DRC	D1VW001CNJW	TN903/8INOX
20874-01010	P1A-4DRC	D1VW001CNJW4D	TN903/8V
20874-01010	P1A-4DRH-0050	D1VW001CNJW91X908	TN90M14
20874-01050	P1A-4DRH-0050	D1VW001CNJWI6N	TN90M16
20874-01050	P1A-4DRH-0080	D1VW001CNJWL	TN90M16V
20875-00450	P1A-4DRH-0080	D1VW001CNJWS2	TN91/2
20875-00450	P1A-4DRK-0010	D1VW001CNJWS3	TN91/2V
20875-00851	P1A-4DRK-0010	D1VW001CNJWS391X868	TN91/4
20875-00851	P1A-4DRK-0100	D1VW001CNJWT	TN91/4V
20875-03011	P1A-4DRK-0100	D1VW001CNJWTI3N	TN93/8
20875-03011	P1A-4DRK-0125	D1VW001CNJWTI6N	TN93/8V
20877FIL	P1A-4DRK-0125	D1VW001CNJWX129	TN951/2
20877FIL	P1A-4DRS	D1VW001CNJWX5056	TN951/4
20878FIL	P1A-4DRS	D1VW001CNJWX624	TN951/4/100

20878FIL	P1A-4HMB	D1VW001CNJWX651	TN951/4V
20879FIL	P1A-4HMB	D1VW001CNJWX670	TN9513
20879FIL	P1A-4HMF	D1VW001CNKW	TN9514/150
20882FIL	P1A-4HMF	D1VW001CNNEE	TN9514/250
20882FIL	P1A-4HMJ	D1VW001CNNEE92X761	TN953/8
20883FIL	P1A-4HMJ	D1VW001CNPEE	TN953/8/100
20883FIL	P1A-4HMJZ	D1VW001CNQW	TN953/8V
20884FIL	P1A-4HMJZ	D1VW001CNSWX5163	TNI1201/2
20884FIL	P1A-4HMT	D1VW001CNSWX610	TNI1203/8
20885FIL	P1A-4HMT	D1VW001CNTEE	TNI121/2
20885FIL	P1A-4HRC	D1VW001CNTW	TNI163/4
20886FIL	P1A-4HRC	D1VW001CNTWT	TNI163/4V
20886FIL	P1A-4HRH-0050	D1VW001CNUW	TNI601/4
20892-00710	P1A-4HRH-0050	D1VW001CNUWX651	TNI601/8
20892-00710	P1A-4HRH-0080	D1VW001CNYG6	TNI651/4
20892-00720	P1A-4HRH-0080	D1VW001CNYW	TNI651/8
20892-00720	P1A-4HRK-0100	D1VW001CVJDLJ5	TNI701/4
20897-00200	P1A-4HRK-0100	D1VW001CVJW	TNI701/8
20897-00200	P1A-4HRS	D1VW001CVJW4D	TNI703/8
20897-00220	P1A-4HRS	D1VW001CVJW91X129X999	TNI801/4
20897-00220	P1A-4JRC	D1VW001CVJWL	TNI801/8
20897-00300	P1A-4JRC	D1VW001CVTW	TNI901/4
20897-00300	P1A-4JRH-0025	D1VW001CVYW	TNI91/4V
20897-00320	P1A-4JRH-0025	D1VW001ENGW	TNI93/8
20897-00320	P1A-4JRH-0050	D1VW001ENJW	TNI93/8V
20897-00340	P1A-4JRH-0050	D1VW001ENJW91X864	TNI951/4
20897-00340	P1A-4JRH-0320	D1VW001ENJWI5N	TNI953/8
20897-00480	P1A-4JRH-0320	D1VW001ENJWL	TN-PK-100-M10
20897-00480	P1A-4JRK-0050	D1VW001ENJWS2	TN-PK-100-M10
20897-00520	P1A-4JRK-0050	D1VW001ENJWTI5N	TN-PK-F-G3
20897-00520	P1A-4JRK-0080	D1VW001ENKW	TN-PK-F-G3
20897-00920	P1A-4JRK-0080	D1VW001ENSWX5163	TNV201/2
20897-00920	P1A-4JRK-0320	D1VW001ENTW	TNV20M24
20897-01000	P1A-4JRK-0320	D1VW001ENUWX129	TNV601/4
20897-01000	P1A-4JRS	D1VW001ENYW	TNV601/8
20897-02000	P1A-4JRS	D1VW001FNGW	TNV651/4
20897-02000	P1A-S010DS-0010	D1VW001FNJDLJ5	TNV651/8
20897-02475	P1A-S010DS-0010	D1VW001FNJW	TNV65M10
20897-02475	P1A-S010DS-0015	D1VW001FNJW91X999	TNV65M8
20898-00160	P1A-S010DS-0015	D1VW001FNJWI2N	TNV701/4
20898-00160	P1A-S010DS-0020	D1VW001FNJWI5N	TNV701/8
20898-00240	P1A-S010DS-0020	D1VW001FNJWL	TNV70M10
20898-00240	P1A-S010DS-0025	D1VW001FNJWTI5N	TNV801/4/45
20898-00290	P1A-S010DS-0025	D1VW001FNKW	TNV801/4/90
20898-00290	P1A-S010DS-0030	D1VW001FNTW	TNV801/8/45
20898-00350	P1A-S010DS-0030	D1VW001FNYW	TNV801/8/90
20898-00350	P1A-S010DS-0040	D1VW001FVJW	TNV803/8/90
20898-00420	P1A-S010DS-0040	D1VW001KNGW	TNV901/4
20898-00420	P1A-S010DS-0050	D1VW001KNGWX651	TNV903/8
20898-00520	P1A-S010DS-0050	D1VW001KNJDLJ5	TNV90M14
20898-00520	P1A-S010DS-0060	D1VW001KNJEE	TNV951/4
20898-00860	P1A-S010DS-0060	D1VW001KNJW	TNV953/8
20898-00860	P1A-S010DS-0080	D1VW001KNJW4D	TP2200J

20898-00880	P1A-S010DS-0080	D1VW001KNJW91X999	TP2200K
20898-00880	P1A-S010DS-0100	D1VW001KNJWI4N	TP2201J
20898-00950	P1A-S010DS-0100	D1VW001KNJWL	TP2201K
20898-00950	P1A-S010DS-0105	D1VW001KNJWTI4N	TP2202J
20898-02000	P1A-S010DS-0105	D1VW001KNJWX651	TP2202K
20898-02000	P1A-S010DS-0125	D1VW001KNKW	TP4400J
20899-00120	P1A-S010DS-0125	D1VW001KNTW	TP4400K
20899-00120	P1A-S010DS-0160	D1VW001KNTW91X868	TP4401J
20899-00250	P1A-S010DS-0160	D1VW001KNUW	TP4401K
20899-00250	P1A-S010KS-0080	D1VW001KNYW	TP4402J
20899-00800	P1A-S010KS-0080	D1VW001KVKW	TP4402K
20899-00800	P1A-S010SS-0010	D1VW001KVYW	TP6600J
20899-01520	P1A-S010SS-0010	D1VW001MNGW	TP6600K
20899-01520	P1A-S010SS-0015	D1VW001MNJW	TP6601J
20899-01990	P1A-S010SS-0015	D1VW001MNJWI4N	TP6601K
20899-01990	P1A-S010SS-0025	D1VW001MNJWS3	TP6602J
20899-06520	P1A-S010SS-0025	D1VW001MNKW	TP6602K
20899-06520	P1A-S010SS-0040	D1VW001MNTW	TP8800J
20899-06900	P1A-S010SS-0040	D1VW001SNJW	TP8800K
20899-06900	P1A-S010SS-0050	D1VW002CNAW	TP8801J
208A-0673	P1A-S010SS-0050	D1VW002CNGW	TP8801K
208A-2916	P1A-S010SS-0080	D1VW002CNGWS3	TP8802J
20-8TRTXS	P1A-S010SS-0080	D1VW002CNGWX651	TP8802K
20900-01990	P1A-S012DS-0010	D1VW002CNHW	TPDM0202DE7
20900-01990	P1A-S012DS-0010	D1VW002CNJDJ5	TPDM050505DE5
20900-02500	P1A-S012DS-0015	D1VW002CNJDL	TPDM0505DE7
20900-02500	P1A-S012DS-0015	D1VW002CNJDLJ5	TPDM05D
20901-00300	P1A-S012DS-0020	D1VW002CNJEE	TPDM0808DE5
20901-00300	P1A-S012DS-0020	D1VW002CNJG	TPDM10D
2090-25-01000-0000-000000	P1A-S012DS-0025	D1VW002CNJW	TPLS10
2090-25-01000-0000-000000	P1A-S012DS-0025	D1VW002CNJW4D	TPLS10BP
2090-25-01220-0000-000000	P1A-S012DS-0029	D1VW002CNJW4N	TPLS12
2090-25-01220-0000-000000	P1A-S012DS-0029	D1VW002CNJW91X864	TPLS12-10
2090-4015	P1A-S012DS-0030	D1VW002CNJW91X908	TPLS12BP
20914FIL	P1A-S012DS-0030	D1VW002CNJW91X999	TPLS14
20914FIL	P1A-S012DS-0040	D1VW002CNJWI6N	TPLS15
20915FIL	P1A-S012DS-0040	D1VW002CNJWL	TPLS15BP
20915FIL	P1A-S012DS-0050	D1VW002CNJWP	TPLS16
20916FIL	P1A-S012DS-0050	D1VW002CNJWS2	TPLS16BP
20916FIL	P1A-S012DS-0060	D1VW002CNJWS291X868	TPLS18
20917FIL	P1A-S012DS-0060	D1VW002CNJWS3	TPLS18BP
20917FIL	P1A-S012DS-0080	D1VW002CNJWX651	TPLS18BPBLKOEL
20918FIL	P1A-S012DS-0080	D1VW002CNKW	TPLS20
20918FIL	P1A-S012DS-0100	D1VW002CNKW91X908	TPLS20BP
20919FIL	P1A-S012DS-0100	D1VW002CNNEE	TPLS22
20919FIL	P1A-S012DS-0125	D1VW002CNSW91XG161	TPLS25
20920FIL	P1A-S012DS-0125	D1VW002CNSWX5102	TPLS25BP
20920FIL	P1A-S012DS-0160	D1VW002CNSWX5163	TPLS28
20923FIL	P1A-S012DS-0160	D1VW002CNSWX610	TPLS30
20923FIL	P1A-S012DS-0200	D1VW002CNTW	TPLS30BP
20925FIL	P1A-S012DS-0200	D1VW002CNTW91X868	TPLS32
20925FIL	P1A-S012DV-0140	D1VW002CNUW	TPLS35
20926FIL	P1A-S012DV-0140	D1VW002CNUWS2	TPLS38

20926FIL	P1A-S012SS-0010	D1VW002CNYW	TPLS6
20927FIL	P1A-S012SS-0010	D1VW002CVJW	TPLS6CF
20927FIL	P1A-S012SS-0015	D1VW002CVJW4D	TPLS8
20930FIL	P1A-S012SS-0015	D1VW002CVJWS3	TPLS8-6
20930FIL	P1A-S012SS-0025	D1VW002CVTW	TPLS8-6BP
20931FIL	P1A-S012SS-0025	D1VW002CVYW	TPLS8BP
20931FIL	P1A-S012SS-0029	D1VW002ENAW	TPLSS10
20971FIL	P1A-S012SS-0029	D1VW002ENGW	TPLSS10.2
20971FIL	P1A-S012SS-0040	D1VW002ENGWI5N	TPLSS12
20974-01850	P1A-S012SS-0040	D1VW002ENGWS3	TPLSS13.5
20974-01850	P1A-S012SS-0050	D1VW002ENGWX651	TPLSS15
20977FIL	P1A-S012SS-0050	D1VW002ENJD	TPLSS16
20977FIL	P1A-S012SS-0080	D1VW002ENJDJ5	TPLSS17.2
20993FIL	P1A-S012SS-0080	D1VW002ENJDLJ5	TPLSS18
20993FIL	P1A-S016DS-0005	D1VW002ENJEE	TPLSS20
20997FIL	P1A-S016DS-0005	D1VW002ENJW	TPLSS21.3
20997FIL	P1A-S016DS-0010	D1VW002ENJW4D	TPLSS25
209FL5JV4D6B	P1A-S016DS-0010	D1VW002ENJW4N	TPLSS26.9
209FL5JV4D6B	P1A-S016DS-0012	D1VW002ENJWI5N	TPLSS30
209KLIW21EEX	P1A-S016DS-0012	D1VW002ENJWL	TPLSS6
209KLIW21EVX	P1A-S016DS-0015	D1VW002ENJWP	TPLSS8
209KLIW21MEN	P1A-S016DS-0015	D1VW002ENJWS2	TPQ032WH25T2NB0
209KLIW21MENS	P1A-S016DS-0020	D1VW002ENJWS3	TPQ040WH25U2NB0
209KLIW21MPN	P1A-S016DS-0020	D1VW002ENJWTI5N	TPQ040WH25U2VB0
209KLIW21MVN	P1A-S016DS-0025	D1VW002ENJWX651	TPQ040WH25U2VS0
209KLIW26EEX	P1A-S016DS-0025	D1VW002ENKW	TPQ050WH25P8HB0
209KLIW26EVX	P1A-S016DS-0030	D1VW002ENKW91X868	TPQ050WH25T2NB0
209KLIW26MEN	P1A-S016DS-0030	D1VW002ENKWTI5N	TPQ050WH25U8HB0
209KLIW26MPN	P1A-S016DS-0040	D1VW002ENNEE	TPQ063WH25T2NB0
209KLIW26MVN	P1A-S016DS-0040	D1VW002ENSWX5163	TPQ080WH25T2NB0
209P-12-6	P1A-S016DS-0050	D1VW002ENSWX610	TPR1005QLBP2E2G241
209P-12-8	P1A-S016DS-0050	D1VW002ENTW	TPR1005QLBS2E2G241
209P-4-2	P1A-S016DS-0080	D1VW002ENUW	TPR1010QLBG2EG241
209P-6-2	P1A-S016DS-0080	D1VW002ENUWS3	TPR1010QLBP2E2G241
209P-6-4	P1A-S016DS-0100	D1VW002ENYW	TPR1010QLBS2E2G206
209P-8-4	P1A-S016DS-0100	D1VW002EVJDLJ5	TPR1010QLBS2E2G241
209P-8-6	P1A-S016DS-0105	D1VW002EVJW	TPR1020QLBG2EG241
209SFIW21MENS	P1A-S016DS-0105	D1VW002EVJWX651	TPR105QBG2EG12E
209SLIW21EEX	P1A-S016DS-0116	D1VW002EVYW	TPR105QBP2EG12E
209SLIW21EVX	P1A-S016DS-0116	D1VW002FNJW	TPR105QBS2EG12E
209SLIW21MEN	P1A-S016DS-0125	D1VW002KNGW	TPR10XXXLBP2E2G241
209SLIW21MPN	P1A-S016DS-0125	D1VW002KNGWI1N	TPR1105QLBS2E2G241
209SLIW21MVN	P1A-S016DS-0140	D1VW002KNGWS2	TPR110CBG2EG12E
209SLIW26EEX	P1A-S016DS-0140	D1VW002KNJDLJ5	TPR110QBG2EG121
209SLIW26EVX	P1A-S016DS-0160	D1VW002KNJEE	TPR110QBG2EG12E
209SLIW26MEN	P1A-S016DS-0160	D1VW002KNJW	TPR110QBG2EG12K
209SLIW26MPN	P1A-S016DS-0200	D1VW002KNJW4D	TPR110QBP2EG121
209SLIW26MVN	P1A-S016DS-0200	D1VW002KNJW91X908	TPR110QBP2EG126
20AP1CF	P1A-S016DS-0250	D1VW002KNJWI4N	TPR110QBP2EG12E
20AP2CF	P1A-S016DS-0250	D1VW002KNJWL	TPR110QBP2EG12T
20BAFM9FM12	P1A-S016DS-0320	D1VW002KNJWS2	TPR110QBS2EG121
20BAMJ4FM12	P1A-S016DS-0320	D1VW002KNJWS3	TPR110QBS2EG12E
20BAMJ4FM4	P1A-S016DS-0400	D1VW002KNJWTI4N	TPR110QLBG2EG121

20BAMJ4FM6	P1A-S016DS-0400	D1VW002KNKW	TPR110QLBP2EG121
20BAMJ6FM4	P1A-S016DS-0500	D1VW002KNSWX5099	TPR110QLBP2EG12E
20BAMJ6FM6	P1A-S016DS-0500	D1VW002KNTW	TPR110QLBS2EG121
20BAMJ6FM9	P1A-S016DS-0600	D1VW002KNTW91X868	TPR110QLBS2EG126
20BAMJ8FM12	P1A-S016DS-0600	D1VW002KNUW	TPR110QLBS3EG121
20BAMJ8FM6	P1A-S016DS-0700	D1VW002KNYW	TPR1110QLBG2H2G241
20BAMJ8FM9	P1A-S016DS-0700	D1VW002KVJW	TPR1110QLBP2E2G241
20BAMM6FM6	P1A-S016KS-0160	D1VW002KVUW	TPR1110QLBS2E2G241
20BAMM9FM4	P1A-S016KS-0160	D1VW002KVYW	TPR1110QLBS2EG241
20BAMRH12FM16	P1A-S016MS-0010	D1VW002MNJW	TPR1120QLBG2E2G241
20BAMRH12FM9	P1A-S016MS-0010	D1VW002MNJWS391X868	TPR1120QLBP2E2G241
20BAMRH16FM16	P1A-S016MS-0015	D1VW002MNYW	TPR120QBG2EG12K
20BAMRH9FM6	P1A-S016MS-0015	D1VW003CNJDLJ5	TPR120QBG2EG12S
20BAMRH9FM9	P1A-S016MS-0020	D1VW003CNJW	TPR120QBP2EG121
20BBMTXS	P1A-S016MS-0020	D1VW003CNJWL	TPR120QBP2EG12E
20BC20-316	P1A-S016MS-0025	D1VW003CNJWTI6N	TPR120QLBG2EG121
20BF20-316	P1A-S016MS-0025	D1VW003CNJWX651	TPR120QLBP2EG12E
20BFX12	P1A-S016MS-0030	D1VW003CNKW	TPR120QLBS2EG121
20BFX16	P1A-S016MS-0030	D1VW003CNTW	TPR205QBG2EG12E
20BFX4466	P1A-S016MS-0040	D1VW003CNYW	TPR205QBG2EG12M
20BFX4466-SOG	P1A-S016MS-0040	D1VW003EVJW	TPR205QBP2EG121
20BFX6666	P1A-S016MS-0045	D1VW003FNGWTI2N	TPR205QBS2EG12L
20BFX9966	P1A-S016MS-0045	D1VW003FNJW	TPR205QLBG2EG121
20BFX9966-SOGWO	P1A-S016MS-0050	D1VW003FNJWT	TPR205QLBS2EG121
20BLEN20-316	P1A-S016MS-0050	D1VW003FNJWTI2N	TPR205QLBS2EG12E
20BLP20-316	P1A-S016MS-0060	D1VW003FNJWTI5N	TPR210CBG2EG12E
20BMLS	P1A-S016MS-0060	D1VW003FVJWTI2N	TPR210QBG2EG121
20BMLSS	P1A-S016MS-0075	D1VW003KNJW	TPR210QBG2EG126
20BMTXS	P1A-S016MS-0075	D1VW004ANJW	TPR210QBG2EG12E
20BMTXSS	P1A-S016MS-0080	D1VW004ANJW91X620	TPR210QBP2EG121
20BV6002	P1A-S016MS-0080	D1VW004CNAW	TPR210QBP2EG12E
20BV6002-SOG	P1A-S016MS-0100	D1VW004CNGW	TPR210QBP2EG12L
20BV9002	P1A-S016MS-0100	D1VW004CNGW4D	TPR210QBP2EG12T
20BV9002-SOG	P1A-S016MS-0125	D1VW004CNGWS3	TPR210QBP2ES12T
20C3MXS	P1A-S016MS-0125	D1VW004CNGWX651	TPR210QBS2EG121
20C4OMLOS	P1A-S016MS-0140	D1VW004CNHW	TPR210QBS2EG12E
20C4OMXS	P1A-S016MS-0140	D1VW004CNHW91X868	TPR210QBS2EG12K
20C4OMXSS	P1A-S016MS-0160	D1VW004CNHW91XG039	TPR210QBS2EG12S21
20C5OMLOSS	P1A-S016MS-0160	D1VW004CNJD	TPR210QLBG2EG121
20C5OMXS	P1A-S016MS-0200	D1VW004CNJDJ5	TPR210QLBG2EG12L
20C6MK4S	P1A-S016MS-0200	D1VW004CNJDJS35	TPR210QLBP2EG121
20C6MK4SS	P1A-S016MS-0210	D1VW004CNJDL	TPR210QLBP2EG12E
20C6MLOS	P1A-S016MS-0210	D1VW004CNJDLJ5	TPR210QLBP2EG12L
20C6MXS	P1A-S016MS-0225	D1VW004CNJEE	TPR210QLBS2EG121
20C6MXSS	P1A-S016MS-0225	D1VW004CNJEEP	TPR220QBG2EG121
20CC02EV4D6B	P1A-S016MS-0250	D1VW004CNJEEXG013	TPR220QBG2EG12E
20CC02EV4D6B	P1A-S016MS-0250	D1VW004CNJG	TPR220QBG2EG12M
20CC02EV4T2G	P1A-S016MS-0267	D1VW004CNJW	TPR220QBP2EG121
20CC02EV4T2G	P1A-S016MS-0267	D1VW004CNJW4D	TPR220QBP2EG12E
20CC02GV4	P1A-S016MS-0280	D1VW004CNJW4N	TPR220QBP2EG12L
20CC02GV4	P1A-S016MS-0280	D1VW004CNJW91X864	TPR220QBP2EG12S
20CC02GV4B4A	P1A-S016MS-0300	D1VW004CNJW91X908	TPR220QLBG2EG121
20CC02GV4B4A	P1A-S016MS-0300	D1VW004CNJWI3N	TPR220QLBP2EG12L

20CC02JV4C4B	P1A-S016MS-0320	D1VW004CNJWI6N	TPR220QLBS2EG121
20CC02JV4C4B	P1A-S016MS-0320	D1VW004CNJWL	TPR2XXXLBP2EG121
20CC02JV4T2B	P1A-S016MS-0400	D1VW004CNJWLX624	TPR2XXXLBP2EG12E
20CC02JV4T2B	P1A-S016MS-0400	D1VW004CNJWP	TPR505QLBP2E2G201
20CC02PV4B4G	P1A-S016MS-0450	D1VW004CNJWS2	TPR510QLBG2E2G201
20CC02PV4B4G	P1A-S016MS-0450	D1VW004CNJWS3	TPR510QLBG2EG201
20CC02PV4C4A	P1A-S016SS-0010	D1VW004CNJWT	TPR510QLBP2E2G201
20CC02PV4C4A	P1A-S016SS-0010	D1VW004CNJWTI3N	TPR510QLBP2EG241
20CC02PV4C4G	P1A-S016SS-0015	D1VW004CNJWTI6N	TPR510QLBS2E2G201
20CC02PV4C4G	P1A-S016SS-0015	D1VW004CNJWTX129	TPR510QLBS2EG201
20CC02PV4D6B	P1A-S016SS-0025	D1VW004CNJWX129	TPR520QLBG2EG201
20CC02PV4D6B	P1A-S016SS-0025	D1VW004CNJWX5448	TPR520QLBP2E2G201
20CC02PV4T2B	P1A-S016SS-0040	D1VW004CNJWX624	TPR520QLBP2EG201
20CC02PV4T2B	P1A-S016SS-0040	D1VW004CNJWX651	TPR520QLBS2EG201
20CC02PV4T2G	P1A-S016SS-0050	D1VW004CNKW	TPR5XXXLBP2E2G201
20CC02PV4T2G	P1A-S016SS-0050	D1VW004CNKW91X864	TPR605QLBP2E2G241
20CF02LV4D6B	P1A-S016SS-0080	D1VW004CNKWS3	TPR605QLBS4E2G201
20CF02LV4D6B	P1A-S016SS-0080	D1VW004CNNEE	TPR610QLBG2E2G201
20CF02LV4T2B	P1A-S016TS-0010	D1VW004CNPEE	TPR610QLBG2E2G241
20CF02LV4T2B	P1A-S016TS-0010	D1VW004CNSWX5099	TPR610QLBG2E2G246
20CPM1CF	P1A-S016TS-0015	D1VW004CNSWX5163	TPR610QLBP2E2G241
20CPM2CF	P1A-S016TS-0015	D1VW004CNSWX610	TPR610QLBP2EG241
20CPM2SS	P1A-S016TS-0025	D1VW004CNTEE	TPR610QLBS2E2G241
20DBNVM9M4	P1A-S016TS-0025	D1VW004CNTW	TPR705QLBP2E2G241
20DV12077	P1A-S016TS-0040	D1VW004CNUW	TPR710QLBG2E2G246
20DV12077-LT	P1A-S016TS-0040	D1VW004CNUWS2	TPR710QLBP2E2G241
20DV16077	P1A-S016TS-0050	D1VW004CNUWX651	TPR710QLBS2E2G241
20DV16077-LT	P1A-S016TS-0050	D1VW004CNYW	TPR720QLBP2E2G241
20DV9077	P1A-S020DF-0025	D1VW004CVJDJ5	TPR720QLBS2E2G201
20E6MK4S	P1A-S020DF-0025	D1VW004CVJDLJ5	TPR7XXXLBP2E2G241
20EE20-316	P1A-S020DS-0010	D1VW004CVJW	TPR902QLBP2E2G241
20EMK4S	P1A-S020DS-0010	D1VW004CVJW4D	TPR905QLBP2E2G241
20EMK4SS	P1A-S020DS-0012	D1VW004CVJW91X129X999	TPS1235
20EMTXS	P1A-S020DS-0012	D1VW004CVJWL	TPU10X1.5/1-100
20EMTXSS	P1A-S020DS-0015	D1VW004CVJWX129	TPU10X1.5/1-25
20ET20-316	P1A-S020DS-0015	D1VW004CVJWX651	TPU10X1.5/13-100
20F121666	P1A-S020DS-0020	D1VW004CVKW	TPU10X1.5/13-25
20F121666-K	P1A-S020DS-0020	D1VW004CVTW	TPU10X1.5/3-100
20F12463	P1A-S020DS-0025	D1VW004ENGW	TPU10X1.5/3-25
20F12563	P1A-S020DS-0025	D1VW004ENHW	TPU10X1.5/3-50
20F12663	P1A-S020DS-0030	D1VW004ENJDJ5	TPU10X1.5/5-100
20F12963	P1A-S020DS-0030	D1VW004ENJDLJ5	TPU10X1.5/5-25
20F16463	P1A-S020DS-0035	D1VW004ENJEE	TPU12X2/1-100
20F16663	P1A-S020DS-0035	D1VW004ENJW	TPU12X2/1-25
20F16963	P1A-S020DS-0040	D1VW004ENJW91X999	TPU12X2/3-100
20F3MK4S	P1A-S020DS-0040	D1VW004ENJWI5N	TPU12X2/3-25
20F3MK4SS	P1A-S020DS-0050	D1VW004ENJWL	TPU12X2/5-100
20F3MXS	P1A-S020DS-0050	D1VW004ENJWS2	TPU12X2/5-25
20F41266	P1A-S020DS-0060	D1VW004ENJWS3	TPU16X2.5/3-25
20F41666	P1A-S020DS-0060	D1VW004ENJWT	TPU4X0.75/1-100
20F42EDMLOS	P1A-S020DS-0070	D1VW004ENJWTX129	TPU4X0.75/1-25
20F42EDMLOSV	P1A-S020DS-0070	D1VW004ENJWX129	TPU4X0.75/3-100
20F42EDMXS	P1A-S020DS-0075	D1VW004ENKW	TPU4X0.75/3-25

20F42EDMXSS	P1A-S020DS-0075	D1VW004ENKW91X868	TPU4X0.75/5-100
20F4463	P1A-S020DS-0080	D1VW004ENTW	TPU4X0.75/5-25
20F4563	P1A-S020DS-0080	D1VW004ENUW	TPU4X0.75/7-100
20F4663	P1A-S020DS-0100	D1VW004ENYW	TPU6X1/1-100
20F4666	P1A-S020DS-0100	D1VW004EVJW	TPU6X1/1-1000
20F4963	P1A-S020DS-0125	D1VW004FNGW	TPU6X1/1-25
20F4966	P1A-S020DS-0125	D1VW004FNJW	TPU6X1/13-100
20F4OMXS	P1A-S020DS-0150	D1VW004FNJWT	TPU6X1/2-25
20F4OMXSS	P1A-S020DS-0150	D1VW004FNTW	TPU6X1/3-100
20F5OMLOS	P1A-S020DS-0160	D1VW004KNGW	TPU6X1/3-25
20F5OMLOSS	P1A-S020DS-0160	D1VW004KNHW	TPU6X1/3-50
20F5OMXS	P1A-S020DS-0200	D1VW004KNJEE	TPU6X1/5-100
20F5OMXSS	P1A-S020DS-0200	D1VW004KNJEEP	TPU6X1/5-25
20F5OMXSV	P1A-S020DS-0250	D1VW004KNJW	TPU6X1/7-25
20F61266	P1A-S020DS-0250	D1VW004KNJWI4N	TPU6X1D/3/5-50
20F61666	P1A-S020DS-0320	D1VW004KNJWL	TPU8X1.25/1-100
20F63MXS	P1A-S020DS-0320	D1VW004KNJWS2	TPU8X1.25/1-25
20F642EDMLS	P1A-S020DS-0365	D1VW004KNJWT	TPU8X1.25/13-100
20F642EDMXS	P1A-S020DS-0365	D1VW004KNJWX651	TPU8X1.25/1-50
20F642EDMXSS	P1A-S020DS-0400	D1VW004KNKW	TPU8X1.25/2-100
20F6463	P1A-S020DS-0400	D1VW004KNTW	TPU8X1.25/2-25
20F64OMXS	P1A-S020DS-0450	D1VW004KNUWT	TPU8X1.25/3-100
20F6563	P1A-S020DS-0450	D1VW004KNYW	TPU8X1.25/3-25
20F6663	P1A-S020DS-0500	D1VW004KVJW	TPU8X1.25/3-50
20F6963	P1A-S020DS-0500	D1VW004MNJW	TPU8X1.25/5-100
20F6966	P1A-S020DS-0700	D1VW005CNJW	TPU8X1.25/5-25
20F6MXSS	P1A-S020DS-0700	D1VW005CNKW	TPU8X1.25/7-100
20F91266	P1A-S020FS-0120	D1VW005CNTW	TR00003
20F91666	P1A-S020FS-0120	D1VW005CNYW	TR00010
20F9463	P1A-S020KF-0050	D1VW005ENJW	TR02055
20F9663	P1A-S020KF-0050	D1VW005ENJWI5N	TR02061
20F9963	P1A-S020KS-0010	D1VW005ENJWTI5N	TR02062
20FA20N-316	P1A-S020KS-0010	D1VW005ENKW	TR04/08/04LLCF
20FF20-316	P1A-S020KS-0015	D1VW005MNJW	TR04/08/04LLCFX
20FMTXB	P1A-S020KS-0015	D1VW006CNAW	TR06/04/06LLCF
20FMTXS	P1A-S020KS-0080	D1VW006CNGW	TR06/04/06LLCFX
20FMTXSS	P1A-S020KS-0080	D1VW006CNJEE	TR06/04/06ZLLCF
20FNMK4S	P1A-S020KS-0085	D1VW006CNJW	TR06/08/06L71X
20FNMLS	P1A-S020KS-0085	D1VW006CNJW91X868	TR06/08/06LCF
20FNMLSS	P1A-S020KS-0320	D1VW006CNJWL	TR06/08/06LCFX
20FNMTXS	P1A-S020KS-0320	D1VW006CNJWS3	TR06/08/06ZLCF
20FNMTXSS	P1A-S020MS-0020	D1VW006CNJWT	TR06/10/06L71
20FSC20N-316	P1A-S020MS-0020	D1VW006CNJWX651	TR06/10/06LCF
20FX12	P1A-S020MS-0025	D1VW006CNKW	TR06/10/06LCFX
20FX16	P1A-S020MS-0025	D1VW006CNTW	TR06/10/06ZLCF
20FX16-K	P1A-S020MS-0030	D1VW006CNUW	TR08/04/08LLCF
20FX4466	P1A-S020MS-0030	D1VW006CNYW	TR08/06/08L71
20FX4466-SOG	P1A-S020MS-0035	D1VW006CVJW	TR08/06/08L71X
20FX6666	P1A-S020MS-0035	D1VW006ENGW	TR08/06/08LCF
20FX6666-SOG	P1A-S020MS-0040	D1VW006ENJDJ5	TR08/06/08LCFX
20FX6666-WO	P1A-S020MS-0040	D1VW006ENJW	TR08/06/08ZL71
20FX9966	P1A-S020MS-0050	D1VW006ENJWC999912	TR08/06/08ZLCF
20FX9966-SOG	P1A-S020MS-0050	D1VW006ENKW	TR08/10/08L71

20G4MXS	P1A-S020MS-0065	D1VW006ENTW	TR08/10/08L71X
20G5Q1BSXK	P1A-S020MS-0065	D1VW006FNJW	TR08/10/08LCF
20GV6078	P1A-S020MS-0070	D1VW006FNSWX610	TR08/10/08LCFX
20GV6078SOG	P1A-S020MS-0070	D1VW006FNUW	TR08/10/08LMS
20GV9078	P1A-S020MS-0075	D1VW006FVJW	TR08/10/08ZL71
20GV9078-SOG	P1A-S020MS-0075	D1VW006KNGW	TR08/10/08ZLCF
20H6MK4S	P1A-S020MS-0080	D1VW006KNJDJ5	TR08/12/08L71X
20HMK4S	P1A-S020MS-0080	D1VW006KNJDLJ5	TR08/12/08LCF
20HMK4SS	P1A-S020MS-0085	D1VW006KNJW	TR08/12/08LCFX
20HMLOSS	P1A-S020MS-0085	D1VW006KNJW91X868	TR08/12/08ZL71
20HMLOSSV	P1A-S020MS-0100	D1VW006KNJWL	TR08/12/08ZLCF
20HMTXS	P1A-S020MS-0100	D1VW006KNJWS3	TR08035
20HMTXSS	P1A-S020MS-0125	D1VW006KNJWX5056	TR10/06/06LCF
20J6MK4S	P1A-S020MS-0125	D1VW006KNKW	TR10/06/10L71
20JC6	P1A-S020MS-0160	D1VW006KNTW	TR10/06/10L71X
20JC6	P1A-S020MS-0160	D1VW006KNUW	TR10/06/10LBLKOEL
20JC8	P1A-S020MS-0200	D1VW006KNYW	TR10/06/10LCF
20JMK4S	P1A-S020MS-0200	D1VW006KVJW	TR10/06/10LCFX
20JMTXS	P1A-S020MS-0230	D1VW006KVTW	TR10/06/10LMS
20JMTXSS	P1A-S020MS-0230	D1VW006MNJW	TR10/06/10LMSX
20KAAF05MPN	P1A-S020MS-0250	D1VW006MNJWT	TR10/06/10SCF
20KAAF05MPNS	P1A-S020MS-0250	D1VW006MNYW	TR10/06/10SCFX
20KAAF05MPX	P1A-S020MS-0260	D1VW007CNJW	TR10/06/10SMS
20KAAF05MVN	P1A-S020MS-0260	D1VW007CNTW	TR10/06/10ZLCF
20KAAK10MPX	P1A-S020MS-0280	D1VW007KNJW	TR10/06/10ZSCF
20KAAM05EEX	P1A-S020MS-0280	D1VW008CNAW	TR10/08/10L71
20KAAM05EVX	P1A-S020MS-0300	D1VW008CNGW	TR10/08/10L71X
20KAAM05MEN	P1A-S020MS-0300	D1VW008CNGWP	TR10/08/10LCF
20KAAM05MPD	P1A-S020MS-0320	D1VW008CNGWS2	TR10/08/10LCFX
20KAAM05MPN	P1A-S020MS-0320	D1VW008CNGWX651	TR10/08/10LMS
20KAAM05MPNS	P1A-S020MS-0400	D1VW008CNJD	TR10/08/10ZLCF
20KAAM05MPNS_03	P1A-S020MS-0400	D1VW008CNJDLJ5	TR10/10/06L71
20KAAM05MPNS_06	P1A-S020MS-0500	D1VW008CNJEE	TR10/10/06LCF
20KAAM05MPNS_10	P1A-S020MS-0500	D1VW008CNJW	TR10/10/06LCFX
20KAAM05MPX	P1A-S020MS-0520	D1VW008CNJW4D	TR10/12/10LCF
20KAAM05MPXS	P1A-S020MS-0520	D1VW008CNJW91X908	TR10/12/10LCFX
20KAAM05MVC	P1A-S020MS-0600	D1VW008CNJW91X999	TR10/12/10LMS
20KAAM05MVN	P1A-S020MS-0600	D1VW008CNJWL	TR10/15/10L71
20KAAM05MVX	P1A-S020MS-0700	D1VW008CNJWS2	TR10/15/10L71X
20KAAM05REX	P1A-S020MS-0700	D1VW008CNJWS3	TR10/15/10LCF
20KAAM05RVX	P1A-S020MS-0800	D1VW008CNJWT	TR10/15/10LCFX
20KAAM05RVXS	P1A-S020MS-0800	D1VW008CNJWX651	TR10/15/10ZL71
20KAAM05RVXS_01	P1A-S020MS-0900	D1VW008CNJWX670	TR10/15/10ZLCF
20KAAM06MPX	P1A-S020MS-0900	D1VW008CNKW	TR12/06/06L71
20KAAN10MPN	P1A-S020SS-0010	D1VW008CNKW4D	TR12/06/12L71
20KAAN10MPX	P1A-S020SS-0010	D1VW008CNKWS2	TR12/06/12L71X
20KAAN10MVX	P1A-S020SS-0015	D1VW008CNKWS3	TR12/06/12LCF
20KAAN10RVX	P1A-S020SS-0015	D1VW008CNKWX703	TR12/06/12LCFX
20KAAN13MPX	P1A-S020SS-0020	D1VW008CNNEE	TR12/06/12LMS
20KAAW10EVX	P1A-S020SS-0020	D1VW008CNTW	TR12/06/12SCFX
20KAAW10MEN	P1A-S020SS-0025	D1VW008CNUW	TR12/06/12ZLCF
20KAAW10MEXS_01	P1A-S020SS-0025	D1VW008CNYW	TR12/08/08LCF
20KAAW10MPCS_04	P1A-S020SS-0035	D1VW008CVJW	TR12/08/08LCFX

20KAAW10MPN	P1A-S020SS-0035	D1VW008CVKW	TR12/08/08LMS
20KAAW10MPNS	P1A-S020SS-0040	D1VW008CVTW	TR12/08/08SCF
20KAAW10MPNS_08	P1A-S020SS-0040	D1VW008ENGW	TR12/08/08SCFX
20KAAW10MPX	P1A-S020SS-0050	D1VW008ENJEE	TR12/08/08ZLCF
20KAAW10MPXS_05	P1A-S020SS-0050	D1VW008ENJW	TR12/08/08ZSCF
20KAAW10MVX	P1A-S020SS-0080	D1VW008ENJWS2	TR12/08/12L71
20KAAW10REX	P1A-S020SS-0080	D1VW008ENJWS3	TR12/08/12L71X
20KAAW10RVX	P1A-S020TS-0015	D1VW008ENJWX651	TR12/08/12LCF
20KAAW10RVXS_03	P1A-S020TS-0015	D1VW008ENKW	TR12/08/12LCFX
20KAIF05MPN	P1A-S020TS-0020	D1VW008ENTW	TR12/08/12LMS
20KAIF05MPX	P1A-S020TS-0020	D1VW008ENYW	TR12/08/12S71
20KAIM05EVX	P1A-S020TS-0025	D1VW008FNJW	TR12/08/12S71X
20KAIM05MPN	P1A-S020TS-0025	D1VW008FNKW91X868	TR12/08/12SCF
20KAIM05MPNS	P1A-S020TS-0040	D1VW008KNAW	TR12/08/12SCFX
20KAIM05MPX	P1A-S020TS-0040	D1VW008KNGW	TR12/08/12ZL71
20KAIM05MPXS	P1A-S020TS-0050	D1VW008KNJDJ5	TR12/08/12ZLCF
20KAIM05MPXS_01	P1A-S020TS-0050	D1VW008KNJDL	TR12/08/12ZSCF
20KAIM05MVC	P1A-S020TS-0080	D1VW008KNJEE	TR12/10/10L71
20KAIM05MVN	P1A-S020TS-0080	D1VW008KNJW	TR12/10/10L71X
20KAIM05RVX	P1A-S020ZS-0080	D1VW008KNJW91X908	TR12/10/10LCF
20KAIM05RVXS_01	P1A-S020ZS-0080	D1VW008KNJWS2	TR12/10/10LCFX
20KAIN10MPN	P1A-S025DF-0025	D1VW008KNJWX651	TR12/10/10ZLCF
20KAIN10MPX	P1A-S025DF-0025	D1VW008KNKW	TR12/10/12L71
20KAIW10EEX	P1A-S025DF-0030	D1VW008KNKWX703	TR12/10/12L71X
20KAIW10EEXS	P1A-S025DF-0030	D1VW008KNTW	TR12/10/12LCF
20KAIW10EVX	P1A-S025DF-0050	D1VW009CNAW	TR12/10/12LCFX
20KAIW10MED	P1A-S025DF-0050	D1VW009CNGW	TR12/10/12LDPR71CF
20KAIW10MEX	P1A-S025DF-0080	D1VW009CNGWS3	TR12/10/12LMS
20KAIW10MPN	P1A-S025DF-0080	D1VW009CNJEE	TR12/10/12SCF
20KAIW10MPNS	P1A-S025DF-0100	D1VW009CNJG	TR12/10/12SCFX
20KAIW10MPX	P1A-S025DF-0100	D1VW009CNJW	TR12/10/12ZLCF
20KAIW10MPXS	P1A-S025DF-0200	D1VW009CNJW4D	TR12/10/12ZS71
20KAIW10MPXS_01	P1A-S025DF-0200	D1VW009CNJW91X864	TR12/10/12ZSCF
20KAIW10MVN	P1A-S025DF-0220	D1VW009CNJWL	TR12/12/08LCF
20KAIW10REX	P1A-S025DF-0220	D1VW009CNJWS2	TR12/12/10L71
20KAIW10RVX	P1A-S025DS-0010	D1VW009CNJWS291X868	TR12/12/10L71X
20KAIW10RVXS	P1A-S025DS-0010	D1VW009CNJWS3	TR12/12/10LCF
20KAKO04EVX	P1A-S025DS-0012	D1VW009CNJWT	TR12/12/10LCFX
20KAKO04MPC	P1A-S025DS-0012	D1VW009CNKW	TR12/12/10LDPR71CF
20KAKO04MPN	P1A-S025DS-0015	D1VW009CNKW91X864	TR12/12/10ZL71
20KAKO04MPNS	P1A-S025DS-0015	D1VW009CNKWS3	TR12/15/12L71
20KAKO04MPX	P1A-S025DS-0020	D1VW009CNSWX610	TR12/15/12L71X
20KAKO04MPXS	P1A-S025DS-0020	D1VW009CNTW	TR12/15/12LCF
20KAKO04MPXS_01	P1A-S025DS-0025	D1VW009CNUW	TR12/15/12LCFX
20KAKO04MVN	P1A-S025DS-0025	D1VW009CNYW	TR12/15/12ZLCF
20KAKO04RVX	P1A-S025DS-0030	D1VW009CVTW	TR12/16/12S71
20KAKO04RVXS	P1A-S025DS-0030	D1VW009ENJW	TR12/16/12S71X
20KAKO05EVX	P1A-S025DS-0037	D1VW009ENKW	TR12/16/12SCF
20KAKO05MEN	P1A-S025DS-0037	D1VW009ENKW91X868	TR12/16/12SCFX
20KAKO05MPN	P1A-S025DS-0040	D1VW009ENTW	TR12/16/12ZS71
20KAKO05MPNS	P1A-S025DS-0040	D1VW009ENYW	TR12/16/12ZSCF
20KAKO05MPX	P1A-S025DS-0045	D1VW009EVJW	TR12/18/12L71
20KAKO05MPXS	P1A-S025DS-0045	D1VW009FNJW	TR12/18/12LCF

20KAKO05MPXS_01	P1A-S025DS-0050	D1VW009FNJWT	TR12/18/12LCFX
20KAKO05RVX	P1A-S025DS-0050	D1VW009KNJDLJ5	TR12/18/12ZL71
20KAKO06EVX	P1A-S025DS-0052	D1VW009KNJW	TR12/18/12ZLCF
20KAKO06MPC	P1A-S025DS-0052	D1VW009KNJW91X620	TR15/06/15L71X
20KAKO06MPD	P1A-S025DS-0060	D1VW009KNKW	TR15/06/15LCF
20KAKO06MPN	P1A-S025DS-0060	D1VW009KNTW	TR15/06/15LCFX
20KAKO06MPNS	P1A-S025DS-0075	D1VW009KNUW	TR15/06/15ZLCF
20KAKO06MPNS_05	P1A-S025DS-0075	D1VW010CNJEE	TR15/08/15LCF
20KAKO06MPNS_06	P1A-S025DS-0080	D1VW010CNJW	TR15/08/15LCFX
20KAKO06MPNS_10	P1A-S025DS-0080	D1VW010CNTW	TR15/10/10LCF
20KAKO06MPX	P1A-S025DS-0090	D1VW010ENJW	TR15/10/10LCFX
20KAKO06MPXS	P1A-S025DS-0090	D1VW010ENTW	TR15/10/15L71
20KAKO06MPXS_02	P1A-S025DS-0100	D1VW010KNJWS2	TR15/10/15L71X
20KAKO06MPXS_04	P1A-S025DS-0100	D1VW010MNJWT	TR15/10/15LCF
20KAKO06MVN	P1A-S025DS-0125	D1VW011CNJD	TR15/10/15LCFX
20KAKO06MVX	P1A-S025DS-0125	D1VW011CNJDJ5	TR15/10/15LDPR71CF
20KAKO06RVX	P1A-S025DS-0150	D1VW011CNJDJS25	TR15/10/15LMS
20KAKO06RVXS	P1A-S025DS-0150	D1VW011CNJDJS35	TR15/10/15ZL71
20KAKO36MPN	P1A-S025DS-0160	D1VW011CNJDL	TR15/10/15ZLCF
20KAKO46MPX	P1A-S025DS-0160	D1VW011CNJDLJ5	TR15/12/12L71
20KAKS04MPN	P1A-S025DS-0200	D1VW011CNJGS27Y	TR15/12/12L71X
20KAKS04MPNS	P1A-S025DS-0200	D1VW011CNJW	TR15/12/12LCF
20KAKS04MPX	P1A-S025DS-0250	D1VW011CNJW91X868	TR15/12/12LCFX
20KAKS04MPXS	P1A-S025DS-0250	D1VW011CNJWL	TR15/12/12LDPR71CF
20KAKS04RVX	P1A-S025DS-0270	D1VW011CNJWS2	TR15/12/12ZLCF
20KAKS05MPN	P1A-S025DS-0270	D1VW011CNJWS3	TR15/12/15L71
20KAKS05MPX	P1A-S025DS-0300	D1VW011CNJWT	TR15/12/15L71X
20KAKS05RVX	P1A-S025DS-0300	D1VW011CNKW	TR15/12/15LCF
20KAKS06MEN	P1A-S025DS-0320	D1VW011CNTW	TR15/12/15LCFX
20KAKS06MPC	P1A-S025DS-0320	D1VW011CNYWX129	TR15/12/15LMS
20KAKS06MPN	P1A-S025DS-0350	D1VW011CVJW	TR15/12/15ZLCF
20KAKS06MPNS	P1A-S025DS-0350	D1VW011CVJWS2	TR15/15/08LCFX
20KAKS06MPNS_01	P1A-S025DS-0400	D1VW011CVTW	TR15/15/10LCFX
20KAKS06MPNS_04	P1A-S025DS-0400	D1VW011ENJDJ5	TR15/15/12L71
20KAKS06MPNS_08	P1A-S025DS-0420	D1VW011ENJW	TR15/15/12L71X
20KAKS06MPNS_09	P1A-S025DS-0420	D1VW011ENKW	TR15/15/12LCF
20KAKS06MPX	P1A-S025DS-0450	D1VW011FNJW	TR15/15/12LCFX
20KAKS06MPXS	P1A-S025DS-0450	D1VW014CNJDLJ5	TR15/15/12ZLCF
20KAKS06MVC	P1A-S025DS-0500	D1VW014CNJW	TR15/18/15LCFX
20KAKS06RVX	P1A-S025DS-0500	D1VW014CNKW	TR15/22/15LCF
20KARP04MPN	P1A-S025DS-0600	D1VW014CNTW	TR15/22/15LCFX
20KASM10MPNS	P1A-S025DS-0600	D1VW014CNYW	TR16/06/16SCF
20KATF03MPN	P1A-S025DS-0650	D1VW014ENJDLJ5	TR16/06/16SCFX
20KATF03MPNS	P1A-S025DS-0650	D1VW014ENJW	TR16/08/16S71
20KATF03MPX	P1A-S025DS-0700	D1VW014KNJW	TR16/08/16S71X
20KATF03MPXS	P1A-S025DS-0700	D1VW014KNJWS3	TR16/08/16SCF
20KATF03MVN	P1A-S025DS-0800	D1VW015CNJW	TR16/08/16SCFX
20KATF03MVX	P1A-S025DS-0800	D1VW015CNJW91X868	TR16/10/16S71
20KATF03RVX	P1A-S025DS-1000	D1VW015CNJWX5056	TR16/10/16S71X
20KATF04EVX	P1A-S025DS-1000	D1VW015CNJWX651	TR16/10/16SCF
20KATF04MED	P1A-S025KF-0050	D1VW015CNKW	TR16/10/16SCFX
20KATF04MPC	P1A-S025KF-0050	D1VW015CNTW	TR16/10/16ZS71
20KATF04MPCS_04	P1A-S025KS-0015	D1VW015CVJW	TR16/10/16ZSCF

20KATF04MPN	P1A-S025KS-0015	D1VW015ENJW	TR16/12/16S71
20KATF04MPNS	P1A-S025KS-0020	D1VW015EVJW	TR16/12/16S71X
20KATF04MPX	P1A-S025KS-0020	D1VW015KNJWTI4N	TR16/12/16SCF
20KATF04MPXS	P1A-S025KS-0025	D1VW015MNJW	TR16/12/16SCFX
20KATF04MVN	P1A-S025KS-0025	D1VW015MNJWT	TR16/12/16SMS
20KATF04MVNS	P1A-S025MS-0010	D1VW015MNJWTI4N	TR16/12/16ZS71
20KATF04MVX	P1A-S025MS-0010	D1VW015MNKW	TR16/12/16ZSCF
20KATF04RVX	P1A-S025MS-0015	D1VW016CNJW	TR16/16/12SCFX
20KATF05MPC	P1A-S025MS-0015	D1VW016FNJW	TR16/20/16S71
20KATF05MPN	P1A-S025MS-0020	D1VW016MNJW	TR16/20/16SCF
20KATF05MPNS_01	P1A-S025MS-0020	D1VW016MNJWTI4N	TR16/20/16SCFX
20KATF05MPX	P1A-S025MS-0025	D1VW020BNAW	TR16/20/16ZS71
20KATF05MPXS_01	P1A-S025MS-0025	D1VW020BNGW	TR16/20/16ZSCF
20KATF05MVN	P1A-S025MS-0030	D1VW020BNGW91X908	TR18/06/18LCFX
20KATF05MVX	P1A-S025MS-0030	D1VW020BNGWI5N	TR18/08/18LCF
20KATF05RVX	P1A-S025MS-0040	D1VW020BNGWS2	TR18/08/18LCFX
20KATS03MEN	P1A-S025MS-0040	D1VW020BNGWS3	TR18/10/10L71
20KATS03MPN	P1A-S025MS-0050	D1VW020BNGWT	TR18/10/10LCF
20KATS03MPNS	P1A-S025MS-0050	D1VW020BNHW	TR18/10/10LCFX
20KATS03MPX	P1A-S025MS-0060	D1VW020BNJD	TR18/10/18L71
20KATS03MPXS	P1A-S025MS-0060	D1VW020BNJDJ5	TR18/10/18L71X
20KATS04MPC	P1A-S025MS-0070	D1VW020BNJDJS35	TR18/10/18LCF
20KATS04MPN	P1A-S025MS-0070	D1VW020BNJDL	TR18/10/18LCFX
20KATS04MPX	P1A-S025MS-0080	D1VW020BNJDLJ5	TR18/10/18LDPR71CF
20KATS06MPN	P1A-S025MS-0080	D1VW020BNJEE	TR18/10/18ZL71
20KATS06MPX	P1A-S025MS-0089	D1VW020BNJEEP	TR18/10/18ZLCF
20KBAF05MPX	P1A-S025MS-0089	D1VW020BNJG	TR18/12/12LCF
20KBAM05EVX	P1A-S025MS-0092	D1VW020BNJW	TR18/12/12LCFX
20KBAM05MEN	P1A-S025MS-0092	D1VW020BNJW4D	TR18/12/18L71
20KBAM05MPN	P1A-S025MS-0100	D1VW020BNJW91X864	TR18/12/18L71X
20KBAM05MPNS	P1A-S025MS-0100	D1VW020BNJW91X908	TR18/12/18LCF
20KBAM05MPNS_01	P1A-S025MS-0110	D1VW020BNJW91X999	TR18/12/18LCFX
20KBAM05MPX	P1A-S025MS-0110	D1VW020BNJWI2N	TR18/12/18LDPR71CF
20KBAM05MPXS_03	P1A-S025MS-0115	D1VW020BNJWI5N	TR18/12/18LMS
20KBAM05MVN	P1A-S025MS-0115	D1VW020BNJWI5NX982	TR18/12/18ZL71
20KBAM05MVNS	P1A-S025MS-0125	D1VW020BNJWL	TR18/12/18ZLCF
20KBAM05MVX	P1A-S025MS-0125	D1VW020BNJWLX944	TR18/15/15LCFX
20KBAM05RVX	P1A-S025MS-0140	D1VW020BNJWP	TR18/15/18L71
20KBAM05RVXS_04	P1A-S025MS-0140	D1VW020BNJWS2	TR18/15/18L71X
20KBAN10MPN	P1A-S025MS-0150	D1VW020BNJWS3	TR18/15/18LCF
20KBAN10MPX	P1A-S025MS-0150	D1VW020BNJWT	TR18/15/18LCFX
20KBAN10RVX	P1A-S025MS-0160	D1VW020BNJWTI5N	TR18/15/18LDPR71CF
20KBAW10EEX	P1A-S025MS-0160	D1VW020BNJWTI5NXG145	TR18/15/18ZLCF
20KBAW10EVX	P1A-S025MS-0200	D1VW020BNJWX5448	TR18/18/10L71
20KBAW10MED	P1A-S025MS-0200	D1VW020BNJWX624	TR18/18/10L71X
20KBAW10MEN	P1A-S025MS-0230	D1VW020BNJWX651	TR18/18/10LCF
20KBAW10MPN	P1A-S025MS-0230	D1VW020BNKW	TR18/18/10LCFX
20KBAW10MPNS_01	P1A-S025MS-0235	D1VW020BNKW4N	TR18/18/10LDPR71CF
20KBAW10MPNS_02	P1A-S025MS-0235	D1VW020BNKW91X864	TR18/18/10ZL71
20KBAW10MPNS_03	P1A-S025MS-0250	D1VW020BNKWS2	TR18/18/10ZLCF
20KBAW10MPX	P1A-S025MS-0250	D1VW020BNNEE	TR18/18/12LCFX
20KBAW10MPXS	P1A-S025MS-0265	D1VW020BNPEE	TR18/18/15LCFX
20KBAW10MVN	P1A-S025MS-0265	D1VW020BNSWI2NX5099	TR18/22/18LCFX

20KBAW10MVNS_01	P1A-S025MS-0280	D1VW020BNSWI5NX5099	TR20/08/20SCFX
20KBAW10MVX	P1A-S025MS-0280	D1VW020BNSWX5099	TR20/10/20S71
20KBAW10REX	P1A-S025MS-0290	D1VW020BNSWX5102	TR20/10/20S71X
20KBAW10RVX	P1A-S025MS-0290	D1VW020BNSWX5163	TR20/10/20SCF
20KBAW10RVXS_01	P1A-S025MS-0300	D1VW020BNSWX610	TR20/10/20SCFX
20KBIF05MPX	P1A-S025MS-0300	D1VW020BNTEE	TR20/10/20ZSCF
20KBIF05RVX	P1A-S025MS-0320	D1VW020BNTW	TR20/12/20S71
20KBIM05EVX	P1A-S025MS-0320	D1VW020BNTW91X868	TR20/12/20S71X
20KBIM05EVXS	P1A-S025MS-0340	D1VW020BNTWT	TR20/12/20SCF
20KBIM05MPN	P1A-S025MS-0340	D1VW020BNUW	TR20/12/20SCFX
20KBIM05MPNS_01	P1A-S025MS-0400	D1VW020BNUWI2N	TR20/12/20ZSCF
20KBIM05MPX	P1A-S025MS-0400	D1VW020BNUWI5N	TR20/16/20S71
20KBIM05MPXS_01	P1A-S025MS-0406	D1VW020BNUWS2	TR20/16/20S71X
20KBIM05RCX	P1A-S025MS-0406	D1VW020BNUWTI5N	TR20/16/20SCF
20KBIM05RVX	P1A-S025MS-0420	D1VW020BNUWX651	TR20/16/20SCFX
20KBIM12MPNS	P1A-S025MS-0420	D1VW020BNXG107	TR20/16/20ZS71
20KBIN10RVX	P1A-S025MS-0483	D1VW020BNYW	TR20/16/20ZSCF
20KBIW10EVX	P1A-S025MS-0483	D1VW020BNYWT	TR20/25/20S71X
20KBIW10MEX	P1A-S025MS-0500	D1VW020BVGW	TR20/25/20SCF
20KBIW10MPN	P1A-S025MS-0500	D1VW020BVJDLJ5	TR20/25/20SCFX
20KBIW10MPNS_01	P1A-S025MS-0530	D1VW020BVJEE	TR20/25/20ZSCF
20KBIW10MPNS_02	P1A-S025MS-0530	D1VW020BVJW	TR22/10/22L71
20KBIW10MPX	P1A-S025MS-0550	D1VW020BVJW4D	TR22/10/22L71X
20KBIW10MPXS_01	P1A-S025MS-0550	D1VW020BVJWI2N	TR22/10/22LCF
20KBIW10MVN	P1A-S025MS-0560	D1VW020BVJWI5N	TR22/10/22LCFX
20KBIW10MVX	P1A-S025MS-0560	D1VW020BVJWL	TR22/10/22LDPR71CF
20KBIW10RVX	P1A-S025MS-0600	D1VW020BVTW	TR22/10/22ZL71
20KBKO04EVX	P1A-S025MS-0600	D1VW020BVUWI5N	TR22/10/22ZLCF
20KBKO04MPC	P1A-S025MS-0640	D1VW020BVYW	TR22/12/12LCFX
20KBKO04MPN	P1A-S025MS-0640	D1VW020DEJWXG053	TR22/12/22L71
20KBKO04MPX	P1A-S025MS-0700	D1VW020DNAW	TR22/12/22L71X
20KBKO04MPXS	P1A-S025MS-0700	D1VW020DNGW	TR22/12/22LCF
20KBKO04MVN	P1A-S025MS-0750	D1VW020DNGWS3	TR22/12/22LCFX
20KBKO04REX	P1A-S025MS-0750	D1VW020DNJD	TR22/12/22LMS
20KBKO04RVX	P1A-S025MS-0800	D1VW020DNJDJ5	TR22/12/22ZLCF
20KBKO05EVX	P1A-S025MS-0800	D1VW020DNJDL	TR22/15/15L71
20KBKO05MPN	P1A-S025MS-0900	D1VW020DNJDLJ5	TR22/15/15L71X
20KBKO05MPX	P1A-S025MS-0900	D1VW020DNJDT	TR22/15/15LCF
20KBKO05MPXS_01	P1A-S025MS-1000	D1VW020DNJEE	TR22/15/15LCFX
20KBKO05MVX	P1A-S025MS-1000	D1VW020DNJW	TR22/15/22L71
20KBKO05RVX	P1A-S025MV-0080	D1VW020DNJWI3N	TR22/15/22L71X
20KBKO06EVX	P1A-S025MV-0080	D1VW020DNJWL	TR22/15/22LCF
20KBKO06MEN	P1A-S025SS-0010	D1VW020DNJWP	TR22/15/22LCFX
20KBKO06MPC	P1A-S025SS-0010	D1VW020DNJWS2	TR22/15/22LDPR71CF
20KBKO06MPN	P1A-S025SS-0015	D1VW020DNJWS3	TR22/15/22LMS
20KBKO06MPNS	P1A-S025SS-0015	D1VW020DNJWT	TR22/15/22ZL71
20KBKO06MPX	P1A-S025SS-0020	D1VW020DNJWX5448	TR22/15/22ZLCF
20KBKO06MPXS	P1A-S025SS-0020	D1VW020DNKW	TR22/18/18L71
20KBKO06MVN	P1A-S025SS-0025	D1VW020DNNEE	TR22/18/18L71X
20KBKO06MVX	P1A-S025SS-0025	D1VW020DNPEE	TR22/18/18LCF
20KBKO06REX	P1A-S025SS-0037	D1VW020DNSWX5099	TR22/18/18LCFX
20KBKO06RVX	P1A-S025SS-0037	D1VW020DNTW	TR22/18/18LDPR71CF
20KBKO46MPNS	P1A-S025SS-0040	D1VW020DNUW	TR22/18/18ZLCF

20KBKS04MPN	P1A-S025SS-0040	D1VW020DNYW	TR22/18/22L71
20KBKS04MPX	P1A-S025SS-0050	D1VW020DVGW	TR22/18/22L71X
20KBKS04MPXS_01	P1A-S025SS-0050	D1VW020DVJDLJ5	TR22/18/22LCF
20KBKS04MVN	P1A-S025SS-0080	D1VW020DVJW	TR22/18/22LCFX
20KBKS04RVX	P1A-S025SS-0080	D1VW020DVJWL	TR22/18/22LDPR71CF
20KBKS05MPN	P1A-S025TS-0012	D1VW020DVTW	TR22/18/22LMS
20KBKS05MPX	P1A-S025TS-0012	D1VW020HNGW	TR22/18/22ZL71
20KBKS06MPC	P1A-S025TS-0020	D1VW020HNJDJ5	TR22/18/22ZLCF
20KBKS06MPN	P1A-S025TS-0020	D1VW020HNJDL	TR22/22/15LCFX
20KBKS06MPNS_02	P1A-S025TS-0025	D1VW020HNJDLJ5	TR22/22/18L71
20KBKS06MPX	P1A-S025TS-0025	D1VW020HNJEE	TR22/22/18L71X
20KBKS06MPXS	P1A-S025TS-0037	D1VW020HNJG	TR22/22/18LCF
20KBKS06MVN	P1A-S025TS-0037	D1VW020HNJGI4N4D	TR22/22/18LCFX
20KBKS06RVX	P1A-S025TS-0040	D1VW020HNJW	TR22/22/18ZLCF
20KBMP08MPX	P1A-S025TS-0040	D1VW020HNJW4N	TR22/28/22L71
20KBTF03MPN	P1A-S025TS-0050	D1VW020HNJW91X908	TR25/10/25ZS71
20KBTF03MPX	P1A-S025TS-0050	D1VW020HNJWI1N	TR25/12/25SCFX
20KBTF03RVX	P1A-S025TS-0060	D1VW020HNJWI4N	TR25/16/25S71
20KBTF04EVX	P1A-S025TS-0060	D1VW020HNJWI4NX982	TR25/16/25S71X
20KBTF04MED	P1A-S025TS-0080	D1VW020HNJWL	TR25/16/25SCF
20KBTF04MPN	P1A-S025TS-0080	D1VW020HNJWS2	TR25/16/25SCFX
20KBTF04MPX	P1C-4KMA	D1VW020HNJWS3	TR25/16/25ZS71
20KBTF04MPXS_02	P1C-4KMA	D1VW020HNJWT	TR25/16/25ZSCF
20KBTF04MVX	P1C-4KMB	D1VW020HNJWTI4N	TR25/20/25S71
20KBTF04RVX	P1C-4KMB	D1VW020HNJWX651	TR25/20/25S71X
20KBTF05MEN	P1C-4KMCA	D1VW020HNKW	TR25/20/25SCF
20KBTF05MPC	P1C-4KMCA	D1VW020HNKW91X868	TR25/20/25SCFX
20KBTF05MPN	P1C-4KMD	D1VW020HNNEE	TR25/20/25ZSCF
20KBTF05MPX	P1C-4KMD	D1VW020HNSWX5099	TR25/30/25S71
20KBTF05MVN	P1C-4KMDB	D1VW020HNSWX610	TR25/30/25S71X
20KBTF05RVX	P1C-4KMDB	D1VW020HNTEE	TR25/30/25SCF
20KBTS03MPN	P1C-4KME	D1VW020HNTW	TR25/30/25SCFX
20KBTS03MPNS_01	P1C-4KME	D1VW020HNUW	TR25/30/25ZSCF
20KBTS03MPX	P1C-4KMF	D1VW020HNUWTI4N	TR28/10/28L71
20KBTS04MPN	P1C-4KMF	D1VW020HNYW	TR28/10/28L71X
20KBTS04MPNS_01	P1C-4KMK	D1VW020HVJW	TR28/10/28LCF
20KBTS04MPX	P1C-4KMK	D1VW020HVJWI1N	TR28/10/28LCFX
20KBTS06MPN	P1C-4KML	D1VW020HVJWI4N	TR28/10/28ZLCF
20KBVS4CT	P1C-4KML	D1VW020HVUWI4N	TR28/12/28L71
20KBVS4PH	P1C-4KMP	D1VW021CNGW91X817	TR28/12/28L71X
20KBVS6CT	P1C-4KMP	D1VW021CNJDJ5	TR28/12/28LCF
20KBVS6PH	P1C-4KMQA	D1VW021CNJW	TR28/12/28LCFX
20KBVS8PH	P1C-4KMQA	D1VW021CNJWTI6N	TR28/12/28ZLCF
20KBVS9CT	P1C-4KMSA	D1VW021CNJWX651	TR28/15/28L71
20KBVSM10PH	P1C-4KMSA	D1VW021CNKW91X817	TR28/15/28L71X
20KBVSM12PH	P1C-4KMT	D1VW021CNKW91X868	TR28/15/28LCF
20KBVSM14PH	P1C-4KMT	D1VW021CNTW	TR28/15/28LCFX
20KBVSM6PH	P1C-4KMTB	D1VW021CNYW	TR28/15/28LMS
20KBVSM8PH	P1C-4KMTB	D1VW021CVJWX651	TR28/15/28ZL71
20KFAF05MPN	P1C-4KMZ	D1VW021ENJW	TR28/15/28ZLCF
20KFAM05MPC	P1C-4KMZ	D1VW021ENSWX5099	TR28/18/18LCF
20KFAM05MPN	P1C-4KRC	D1VW021FNJW	TR28/18/28L71
20KFAM05MPX	P1C-4KRC	D1VW021FNJW91X864	TR28/18/28L71X

20KFAN10MPN	P1C-4KRF	D1VW021FNTW	TR28/18/28LCF
20KFAW10MPN	P1C-4KRF	D1VW021KNGW	TR28/18/28LCFX
20KFAW10MVN	P1C-4KRS	D1VW021KNJW	TR28/18/28LDPR71CF
20KFIM05MPN	P1C-4KRS	D1VW021MNJW	TR28/18/28LMS
20KFIM05MPX	P1C-4KRVA	D1VW022CNJW	TR28/18/28ZL71
20KFIW10MPN	P1C-4KRVA	D1VW022CNJWL	TR28/18/28ZLCF
20KFIW10RVX	P1C-4LMA	D1VW022CNTW	TR28/22/22L71
20KFKO04MPN	P1C-4LMA	D1VW022ENJW	TR28/22/22L71X
20KFKO04MPX	P1C-4LMB	D1VW022ENJW91X868	TR28/22/22LCF
20KFKO04RVX	P1C-4LMB	D1VW022ENKW	TR28/22/22LCFX
20KFKO05MPN	P1C-4LMCA	D1VW022KNJDLJ5	TR28/22/22ZLCF
20KFKO06MPN	P1C-4LMCA	D1VW022KNJW	TR28/22/28L71
20KFKO06MPX	P1C-4LMD	D1VW022MNGW	TR28/22/28L71X
20KFKO06RVX	P1C-4LMD	D1VW022MNJW	TR28/22/28LCF
20KFKS04MPN	P1C-4LMDB	D1VW026BNGW	TR28/22/28LCFX
20KFKS04RVXS	P1C-4LMDB	D1VW026BNJEE	TR28/22/28LDPR71CF
20KFKS06MPN	P1C-4LME	D1VW026BNJEEXG013	TR28/22/28LMS
20KFKS06RVX	P1C-4LME	D1VW026BNJW	TR28/22/28ZLCF
20KFTF03MPN	P1C-4LMF	D1VW026BNJW91X864	TR28/28/22LCF
20KFTF03MPX	P1C-4LMF	D1VW026BNJWI5N	TR28/28/22LCFX
20KFTF04MPC	P1C-4LML	D1VW026BNJWS3	TR2PK10-4
20KFTF04MPN	P1C-4LML	D1VW026BNJWT	TR2PK10-6
20KFTF04MPX	P1C-4LMMA	D1VW026BNJWTI3N	TR2PK10-8
20KFTF04RVX	P1C-4LMMA	D1VW026BNJWTI5N	TR2PK12-10
20KFTF05MPC	P1C-4LMP	D1VW026BNKW	TR2PK12-6
20KFTF05MPN	P1C-4LMP	D1VW026BNNEE	TR2PK12-8
20KFTF05MPX	P1C-4LMSA	D1VW026BNTW	TR2PK14-10
20KFTS03MPN	P1C-4LMSA	D1VW026BNYW	TR2PK14-12
20KFTS04MPN	P1C-4LMT	D1VW026BVJW	TR2PK14-8
20KNVS4CT	P1C-4LMT	D1VW026DNJW	TR2PK6-4
20KNVS4PH	P1C-4LMTB	D1VW026DNUW	TR2PK8-4
20KNVS6CT	P1C-4LMTB	D1VW026DVJW	TR2PK8-6
20KNVS6PH	P1C-4LMZ	D1VW026HNGW	TR30/16/30S71
20KNVS8PH	P1C-4LMZ	D1VW026HNJEE	TR30/16/30SCF
20KNVS9CT	P1C-4LRC	D1VW026HNJW	TR30/20/30S71X
20KNVSM10PH	P1C-4LRC	D1VW026HNJWI1N	TR30/20/30SCF
20KNVSM12PH	P1C-4LRF	D1VW026HNJWI4N	TR30/20/30SCFX
20KNVSM14PH	P1C-4LRF	D1VW026HNJWI4NX982	TR30/20/30ZS71
20KNVSM6PH	P1C-4LRS	D1VW026HNJWP	TR30/25/25SCFX
20KNVSM8PH	P1C-4LRS	D1VW026HNJWS391X868	TR30/25/30S71X
20KRAM08MPNS_01	P1C-4MMA	D1VW026HNJWTI4N	TR30/25/30SCF
20KRKO04MPX	P1C-4MMA	D1VW026HNJWXG168	TR30/25/30SCFX
20KSAM05MPNS	P1C-4MMB	D1VW026HNKW	TR30/25/30ZS71
20KSAM05MPNS_01	P1C-4MMB	D1VW026HNTW	TR30/38/30SCFX
20KSKO04MPX	P1C-4MMCA	D1VW026HNYW	TR35/12/35ZLCF
20LEMQ1CF	P1C-4MMCA	D1VW026HVJW	TR35/18/35L71
20LEMQ1SS	P1C-4MMD	D1VW026HVJWI1N	TR35/18/35LCF
20LEMQ2SS	P1C-4MMD	D1VW026HVJWI4N	TR35/18/35LCFX
20LOEMQ1CF	P1C-4MMDB	D1VW030BNGW	TR35/22/22LCFX
20LOEMQ2CF	P1C-4MMDB	D1VW030BNHW	TR35/22/35LCF
20M1212K6	P1C-4MME	D1VW030BNJEE	TR35/22/35LCFX
20M1216K6	P1C-4MME	D1VW030BNJEEXG013	TR35/28/28LCF
20M1216K6-OP	P1C-4MMF	D1VW030BNJG	TR35/28/35L71

20M124K3	P1C-4MMF	D1VW030BNJW	TR35/28/35LCF
20M124K3-OP	P1C-4MMG	D1VW030BNJW4D	TR35/28/35LCFX
20M124K6	P1C-4MMG	D1VW030BNJWI2N	TR35/28/35LDPR71CF
20M124K6-OP	P1C-4MMK	D1VW030BNJWL	TR38/25/38S71X
20M125K3	P1C-4MMK	D1VW030BNJWS2	TR38/25/38SCF
20M126K3	P1C-4MML	D1VW030BNJWS3	TR38/25/38SCFX
20M126K6	P1C-4MML	D1VW030BNJWT	TR38/25/38ZS71
20M126K6-OP	P1C-4MMMA	D1VW030BNJWTI2N	TR38/30/38S71X
20M129K3	P1C-4MMMA	D1VW030BNJWTI5N	TR42/12/42LCFX
20M129K3-OP	P1C-4MMP	D1VW030BNJWX670	TR42/18/42LCFX
20M129K40	P1C-4MMP	D1VW030BNKW	TR42/22/42LCF
20M129K6	P1C-4MMQA	D1VW030BNKWS2	TR42/22/42LCFX
20M1612K6	P1C-4MMQA	D1VW030BNTW	TR42/28/42LCFX
20M1612K6-OP	P1C-4MMS	D1VW030BNTWT	TR42/35/42LCFX
20M1616K6	P1C-4MMS	D1VW030BNYW	TRA120/10DD
20M164K3	P1C-4MMSA	D1VW030BVJW	TRA120/10ED
20M164K6	P1C-4MMSA	D1VW030BVTW	TRA60/6DSA
20M166K3	P1C-4MMT	D1VW030DNJW	TRBMB10-8
20M166K6	P1C-4MMT	D1VW030DNJWX651	TRBMB12-10
20M169K3	P1C-4MMTB	D1VW030DNKW	TRBMB12-8
20M169K3-OP	P1C-4MMTB	D1VW030DNTW	TRBMB14-12
20M169K6	P1C-4MMZ	D1VW030DNUWX651	TRBMB6-4
20M169K6-OP	P1C-4MMZ	D1VW030DNYW	TRBMB8-6
20M1SC20-316	P1C-4MRC	D1VW030DVJW91X999	TRBRAB10-8
20M33F87OMLOS	P1C-4MRC	D1VW030HNGW	TRBRAB14-8
20M412B6	P1C-4MRF	D1VW030HNGWS2	TRBZ 10-6-SS
20M412K6	P1C-4MRF	D1VW030HNHW	TRBZ 10-8-SS
20M416K6	P1C-4MRS	D1VW030HNJEE	TRBZ 12-10-SS
20M42C87OMLOS	P1C-4MRS	D1VW030HNJEEXG013	TRBZ 12-6-SS
20M42C87OMXS	P1C-4MRVA	D1VW030HNJW	TRBZ 12-8-SS
20M42C8OMLOS	P1C-4MRVA	D1VW030HNJWI4N	TRBZ 16-12-SS
20M42C8OMXS	P1C-4MRWA	D1VW030HNJWS2	TRBZ 6-10-SS
20M42F682EDMXS	P1C-4MRWA	D1VW030HNJWTI4N	TRBZ 6-3-SS
20M42F82EDMLOS	P1C-4NMA	D1VW030HNKW	TRBZ 6-8-SS
20M42F82EDMXS	P1C-4NMA	D1VW030HNKWS2	TRBZ 8-10-SS
20M42F82EDMXSS	P1C-4NMB	D1VW030HNNEE	TRBZ 8-6-SS
20M42F87OMLOS	P1C-4NMB	D1VW030HNTW	TRC25-0482
20M42F87OMXS	P1C-4NMCA	D1VW030HNUW	TRC25-0585
20M42F8OMXS	P1C-4NMCA	D1VW030HNYW	TRC25-0611
20M42R87OMLOS	P1C-4NMD	D1VW030HVJW	TRC25-0636
20M42V87OMLOS	P1C-4NMD	D1VW030HVKW	TRC25-0662
20M44B6	P1C-4NMDB	D1VW031CNJW	TRC25-0713
20M44B6-OP	P1C-4NMDB	D1VW031CNJW4D	TRC25-0765
20M44K3	P1C-4NME	D1VW032CNJW	TRC25-0790
20M44K3-OP	P1C-4NME	D1VW032ENTW	TRC25-1072
20M46B6	P1C-4NMF	D1VW032ENYW	TRC25-1226
20M46B6-OP	P1C-4NMF	D1VW034CNJDJ5	TRC38-0693
20M46K3	P1C-4NMG	D1VW034CNJW	TRC38-0800
20M46K6	P1C-4NMG	D1VW034CNTW	TRC38-1014
20M49B6	P1C-4NML	D1VW034CNYW	TRC38-1335
20M49B6-OP	P1C-4NML	D1VW034FNJW	TRC38-1513
20M49K3	P1C-4NMMA	D1VW034KNJW	TRC38-1620
20M49K6	P1C-4NMMA	D1VW034KNJWX651	TRF60/5

20M49K6-OP	P1C-4NMP	D1VW035CNJDJ5	TRM/BUS-2S
20M512B6	P1C-4NMP	D1VW035CNJDLJ5	TRM/BUS-S
20M54B6	P1C-4NMQA	D1VW035CNJEE	TRM24/5S1
20M59B6	P1C-4NMQA	D1VW035CNJW	TRM24/5S2
20M612B6	P1C-4NMSA	D1VW035CNJW91XG066	TRM24/5S3
20M612K6	P1C-4NMSA	D1VW035CNJWL	TRM60/5-M203
20M616B6	P1C-4NMT	D1VW035CVJDJ5	TRPB10-6
20M616K6	P1C-4NMT	D1VW035CVJDJ5X129	TRPB10-8
20M64B6	P1C-4NMTB	D1VW035CVJW	TRPB12-10
20M64K3	P1C-4NMTB	D1VW035ENJW	TRPB12-6
20M64K3-OP	P1C-4NRVA	D1VW035KNJG	TRPB12-8
20M64K3-SOG	P1C-4NRVA	D1VW035MNJW	TRPB14-12
20M64K6	P1C-4PMA	D1VW036CNJW	TRPB14-8
20M64K6-OP	P1C-4PMA	D1VW043ENJW	TRPB6-4
20M65K3	P1C-4PMB	D1VW043ENJWI5N	TRPB8-4
20M66B6	P1C-4PMB	D1VW043ENJWTI5N	TRPB8-6
20M66K3	P1C-4PMCA	D1VW048FNJW	TRS/BUS-K
20M66K6	P1C-4PMCA	D1VW048FNJW4D	TRS120/10WPH
20M66K6-OP	P1C-4PMD	D1VW048FNJWL	TRS120/10WPZ
20M69B6	P1C-4PMD	D1VW049BNJW	TRS120/20LW
20M69B6-OP	P1C-4PMDB	D1VW049HNJW	TRS120/2S
20M69K3	P1C-4PMDB	D1VW051CNJW	TRS120/2Z
20M69K6	P1C-4PME	D1VW051CNTW	TRS25
20M69K6-OP	P1C-4PME	D1VW055CNJW	TRS38
20M69K6-WO	P1C-4PMF	D1VW061CNJW	TS11A/B171X
20M912B6	P1C-4PMF	D1VW067CNJW	TS11A/B1VZX
20M912B6-OP	P1C-4PMK	D1VW067KNGWI4N	TS11A/B1X
20M912G6	P1C-4PMK	D1VW067KNJWI4N	TS11A/B271X
20M912K6	P1C-4PML	D1VW069BNJW	TS11A/B2VZX
20M912K6-OP	P1C-4PML	D1VW069BNJWTI5N	TS11A/B2X
20M912K6-SMT	P1C-4PMMA	D1VW069HNJW	TS11CAP
20M916B6	P1C-4PMMA	D1VW069HNJWTI4N	TS12CAP
20M916B6-OP	P1C-4PMP	D1VW069HNKW	TS13CAP
20M916K6	P1C-4PMP	D1VW073CNJW	TS14A/B171X
20M916K6-OP	P1C-4PMQA	D1VW073KNGWTI4N	TS14A/B1VZX
20M94B6	P1C-4PMQA	D1VW073KNJW	TS14A/B1X
20M94B6-OP	P1C-4PMSA	D1VW073KNJWT	TS14A/B231B71X
20M94K3	P1C-4PMSA	D1VW073KNJWTI1N	TS14A/B271X
20M94K3-OP	P1C-4PMT	D1VW073KNJWTI4N	TS14A/B2VZX
20M94K6	P1C-4PMT	D1VW076CNJW	TS14A/B2X
20M96B6	P1C-4PMTB	D1VW076ENJEE	TS16CAP
20M96K3	P1C-4PMTB	D1VW076KNJW	TS20160
20M96K3-SOG	P1C-4PRC	D1VW076KNJWS2	TS20315
20M96K6	P1C-4PRC	D1VW076KNUW	TS20500
20M96K6-K	P1C-4PRF	D1VW076KVJW	TS30A/B1VZX
20M96K6-OP	P1C-4PRF	D1VW078ENGW	TS30A/B1X
20M96K6-SOG	P1C-4PRS	D1VW078ENJW	TS30A/B2VZX
20M99B6	P1C-4PRS	D1VW078ENJWL	TS30A/B2X
20M99B6-OP	P1C-4PRVA	D1VW078ENTW	TS4CAP
20M99B6-SOG	P1C-4PRVA	D1VW078ENUW	TS50160
20M99K3	P1C-4QMA	D1VW078EVGWI2N	TS50315
20M99K3-OP	P1C-4QMA	D1VW078EVJW	TS50500
20M99K6	P1C-4QMB	D1VW078KNGW	TS60125

20M99K6-OP	P1C-4QMB	D1VW078KNJW	TS60250
20MA20N-316	P1C-4QMCA	D1VW078KNJWI4N	TS60500
20MAH4J4	P1C-4QMCA	D1VW078KNTW	TS65125
20MAH4J6	P1C-4QMD	D1VW078KNUW	TS65250
20MAH4J8	P1C-4QMD	D1VW079CNJW	TS65500
20MAH6J4	P1C-4QMDB	D1VW079MNJW	TS6CAP
20MAH6J6	P1C-4QMDB	D1VW080CNJW	TS70125
20MAH6J8	P1C-4QME	D1VW081CNGW	TS70250
20MAH9J4	P1C-4QME	D1VW081CNGWS2	TS70500
20MAH9J6	P1C-4QMF	D1VW081CNJDLJ5	TS8003/00/00
20MAH9J8	P1C-4QMF	D1VW081CNJW	TS8006/00/00
20MAH9RH21	P1C-4QML	D1VW081CNJWL	TS8008/00/02
20MAJ4J4	P1C-4QML	D1VW081CNJWS2	TS8010/00/02
20MAJ4RH9	P1C-4QMMA	D1VW081CNJWS3	TS8CAP
20MAJ6J6	P1C-4QMMA	D1VW081CNJWX129	TS90125
20MAJ6RH9	P1C-4QMSA	D1VW081CNSWS2X610	TS90250
20MAJ8J8	P1C-4QMSA	D1VW081CNTW	TS90500
20MAM12H4	P1C-4QMT	D1VW081CNUW	TS95125
20MAM12H6	P1C-4QMT	D1VW081CNYW	TS95250
20MAM12H9	P1C-4QMTB	D1VW081FNJW	TS95500
20MAM12J4	P1C-4QMTB	D1VW082CNJDJ5	TSB1610T1000
20MAM12J6	P1C-4QRVA	D1VW082CNJDLJ5	TSB4010T800
20MAM12J8	P1C-4QRVA	D1VW082CNJW	TSC0.268X
20MAM12M12	P1C-4RMA	D1VW082CNJWI3N4D	TSC0.5X
20MAM12M16	P1C-4RMA	D1VW082CNJWL	TSC14571X
20MAM12RH12	P1C-4RMB	D1VW082CNJWS2	TSC1VERZX
20MAM12RH16	P1C-4RMB	D1VW082CNJWS3	TSC1X
20MAM12RH9	P1C-4RMCA	D1VW082CVJW	TSC24571X
20MAM16H4	P1C-4RMCA	D1VW082ENJW	TSC2VERZX
20MAM16H6	P1C-4RMD	D1VW082ENJWS2	TSC2X
20MAM16H9	P1C-4RMD	D1VW083BNGW	TSC40604571X
20MAM16J4	P1C-4RMDB	D1VW083BNJW	TSC40804571X
20MAM16J6	P1C-4RMDB	D1VW083BNJW91X908	TSC60
20MAM16J8	P1C-4RME	D1VW083BNJWT	TSC65
20MAM16M16	P1C-4RME	D1VW083BNKW	TSC70
20MAM16RH12	P1C-4RMF	D1VW083BNTW	TSC90
20MAM16RH16	P1C-4RMF	D1VW083BNYW	TSC95
20MAM16RH21	P1C-4RML	D1VW083HNJW	TSJ12
20MAM16RH9	P1C-4RML	D1VW083HNJW91X864	TSJ16
20MAM4H4	P1C-4RMP	D1VW083HNJW91X908	TSJ4
20MAM4H6	P1C-4RMP	D1VW083HNKW91X864	TSJ6
20MAM4H9	P1C-4RMQA	D1VW086CNJW	TSJ9
20MAM4J4	P1C-4RMQA	D1VW101BNJDJ5	TSK06
20MAM4J6	P1C-4RMSA	D1VW101BNJDJS35	TSK06N
20MAM4J8	P1C-4RMSA	D1VW101BNJDLJ5	TSK08
20MAM4M12	P1C-4RMT	D1VW101BNJW	TSK10
20MAM4M16	P1C-4RMT	D1VW101BNJWS2	TSK12
20MAM4M4	P1C-4RMTB	D1VW101BNJWS3	TSK16
20MAM4M6	P1C-4RMTB	D1VW101BNKWS2	TSK4
20MAM4M9	P1C-4RRC	D1VW101BNYW	TSK6
20MAM4RH12	P1C-4RRC	D1VW101DNJDJ5	TSK9
20MAM4RH16	P1C-4RRF	D1VW101DNJDLJ5	TSST08SA1X
20MAM4RH9	P1C-4RRF	D1VW101DNJW	TSV12

20MAM6H4	P1C-4RRS	D1VW101DNJWS3	TT10005
20MAM6H6	P1C-4RRS	D1VW101HNJDJS35XG040	TT15008
20MAM6H9	P1C-4RRVA	D1VW101HNJEE	TT20002
20MAM6J4	P1C-4RRVA	D1VW101HNJW	TTF1005QLBP2EG24A
20MAM6J6	P1C-4SMB	D1VW101HNJWS2	TTF1010QBP2EG244
20MAM6J6	P1C-4SMB	D1VW101HNNEE	TTF1010QBP2EG24B
20MAM6J8	P1C-4SME	D1VW102CNJW	TTF1010QBP2EG32B
20MAM6M12	P1C-4SME	D1VW102CNJWS2	TTF1010QBP2EG32BS16
20MAM6M16	P1C-4SMF	D1VW102ENJDJS25	TTF1010QBS1EG24A
20MAM6M6	P1C-4SMF	D1VW102ENJWS2	TTF1010QLBG1EG24A
20MAM6M6	P1C-4SMT	D1VW102KNJW	TTF1010QLBP2EG243
20MAM6M9	P1C-4SMT	D1VW102KNJWS2	TTF1010QLBP2EG24A
20MAM6RH12	P1C-4SRC	D1VW103CNTW	TTF1010QLBP2HG24A
20MAM6RH16	P1C-4SRC	D1VW104KNGW	TTF1020QLBS1EG24A
20MAM6RH9	P1C-4SRS	D1VW104KNJW	TTF1020QLVG1HG243
20MAM9H4	P1C-4SRS	D1VW104KNJWS2	TTF2040WBG1EG125
20MAM9H6	P1C-4TMB	D1VW104KNTW	TTF210CBPBG129
20MAM9H9	P1C-4TMB	D1VW104KNUW	TTF210CBPEG129
20MAM9J4	P1C-4TME	D1VW104KNYW	TTF210QBG1EG121
20MAM9J6	P1C-4TME	D1VW104KVGW	TTF210QBG1EG129S202
20MAM9J8	P1C-4TMF	D1VW104KVUW	TTF210QBG1EG163
20MAM9M12	P1C-4TMF	D1VW105CNJWT	TTF210QBPEG129
20MAM9M16	P1C-4TMT	D1VW105KNGW	TTF210QBS1EG121
20MAM9M9	P1C-4TMT	D1VW105KNTW	TTF210QLBP2EG129
20MAM9RH12	P1C-4TMTB	D1VW105KNUW	TTF210QLBPEG121
20MAM9RH14	P1C-4TMTB	D1VW105KNYW	TTF210QLBS1EG121
20MAM9RH16	P1C-6080/S90026	D1VW105KVGW	TTF210QLBS1EG129
20MAM9RH9	P1C-6080/S90026	D1VW105KVUW	TTF220QBPEG129
20MARH21RH21	P1C-S063AS-0560	D1VW200CNJW	TTF220QLBG1EG121
20MFAJ12M12	P1C-S063AS-0560	D1VW204CNJW	TTF220QVS1EG161
20MFAJ12M16	P1C-S080/S90008	D1VW204CVJW	TTF302QLBP2EG129
20MFAJ12M4	P1C-S080/S90008	D1VW204KNJW	TTF302QLVG1EG123
20MFAJ12M6	P1D-4080MC10080N1NNF	D1VW205CNJW	TTF3040WBP2BG161
20MFAJ16M4	P1D-4080MC10080N1NNF	D1VW207KNJWI2N	TTF305QLBG1EG121
20MFAJ16M6	P1D4J050MC-0100NNNNN	D1VW207KNJWI5N	TTF305QLBP2EG123
20MFAJ16M9	P1D4J050MC-0100NNNNN	D1VW208BNGWI2N	TTF305QLBP2EG129
20MFAJ4H6	P1D-4KMY	D1VW208BNJW	TTF305QLBS1EG121
20MFAJ4M12	P1D-4KMY	D1VW208BNKW	TTF305QVP2EG161
20MFAJ4M16	P1D-4KMYF	D1VW208BNTW	TTF310CBG3BG161
20MFAJ4M4	P1D-4KMYF	D1VW209KNJW91X864	TTF310CBPBG161
20MFAJ4M6	P1D-4KMYT	D1VW211CNJW	TTF310CBPBG169
20MFAJ4M9	P1D-4KMYT	D1VW211CNJW91X864	TTF310CBPEG129
20MFAJ6M12	P1D-4LMY	D1VW212CNHW	TTF310CBS9BG169
20MFAJ6M16	P1D-4LMY	D1VW215HNJW	TTF310QBP2EG123
20MFAJ6M4	P1D-4LMYF	D1VW216HNJW	TTF310QBP2EG129
20MFAJ6M6	P1D-4LMYF	D2/PLC	TTF310QBP2EG164
20MFAJ6M9	P1D-4LMYT	D200C2	TTF310QBS1EG121
20MFAJ8M12	P1D-4LMYT	D200C2	TTF310QLBG1EG121
20MFAJ8M16	P1D-4MMY	D20SMSX	TTF310QLBP2EG121
20MFAJ8M4	P1D-4MMY	D22LMSX	TTF310QLBP2EG123
20MFAJ8M6	P1D-4MMYF	D25SMSX	TTF310QLBP2EG161
20MFAJ8M9	P1D-4MMYF	D28-04-FHG0	TTF310QLBS1EG129
20MFAM4J4	P1D-4MMYT	D28-04-FHG0	TTF320QLBG1EG121

20MFAM6J6	P1D-4MMYT	D28-04-FKG0	TTF320QLBP2EG121
20MFHJ4H4	P1D-4NMY	D28-04-FKG0	TTF402QBG1EG169
20MFHJ4H9	P1D-4NMY	D28-06-FLG0	TTF405QBG1EG169S223
20MSC16N-316	P1D-4NMYF	D28-06-FLG0	TTF405QBPEG169
20MSC20N-316	P1D-4NMYF	D28-C4-001Q	TTF405QLBS1EG169S226
20MSEL20N-316	P1D-4NMYT	D28-C4-001Q	TTF410CBPEG169
20MVBB	P1D-4NMYT	D28-C4-FG00	TTF410QBG1BG16A
20MVBB6	P1D-4PMY	D28-C4-FG00	TTF410QBPEG169
20MVBB6-B	P1D-4PMY	D28-C4-FH00	TTF410QBS1HG121
20MVBB-ESR1648	P1D-4PMYF	D28-C4-FH00	TTF410QLBP2EG129
20NU20-316	P1D-4PMYF	D28-C4-FHG0	TTF410QLBPEG169
20PFMQ1CF	P1D-4PMYT	D28-C4-FHG0	TTF420QBG1EG123
20PFMQ2CF	P1D-4PMYT	D28-C4-FK00	TTF420QBP2EG163
20PMQ1CF	P1D-4QMY	D28-C4-FK00	TTF420QBP2EG169
20PNMK4S	P1D-4QMY	D28-C4-FL00	TTF502QLBP2HG16E
20PNMK4SS	P1D-4QMYF	D28-C4-FL00	TTF502QLBS1EG163
20PNMTXSS	P1D-4QMYF	D28-C6-FG00	TTF505QLBS1EG163
20R4OMLOS	P1D-4QMYT	D28-C6-FG00	TTF505QLVP2EG163
20R4OMXS	P1D-4QMYT	D28-C6-FGG0	TTF510QBP2EG124
20R4OMXSS	P1D-4RMY	D28-C6-FGG0	TTF510QLBG1HG161
20R6MK4S	P1D-4RMY	D28-C6-FH00	TTF510QLBP2EG161
20R6MXS	P1D-4RMYT	D28-C6-FH00	TTF510QLBP2EG163
20RHDMLOSCF	P1D-4RMYT	D28-C6-FK00	TTF510QLBP2EG164
20RHDMTXS0.2BCF	P1D-6KRH	D28-C6-FK00	TTF510QLBPEG163
20RHDMTXS2.5BCF	P1D-6KRH	D28-C6-FL00	TTF510QLBS1EG161
20RHDMTXSCF	P1D-6KRN	D28-C6-FL00	TTF510QLBS1EG163
20RHDMTXSVIT	P1D-6KRN	D28-C6-FLG0	TTF520QBG1EG161
20RHV42EDMLOSCF	P1D-6KRNL	D28-C6-FLG0	TTF520QBP2EG163
20RHV42EDMXSCF	P1D-6KRNL	D28LMSX	TTF520QBPG161
20RHZ42EDMLOSCF	P1D-6KRV	D2A060-0.1N	TTF520QLBP2EG161
20RHZ5OMLOSCF	P1D-6KRV	D2A060-1.0N	TTF520QLBS1EG161
20RHZ5OMXSS	P1D-6LRD	D2A060-2.0N	TTF605QBP2EG201
20RVP9072	P1D-6LRD	D2A060-2.5N	TTF605QBP2EG203
20RVP9072-CE	P1D-6LRF	D2A060-5.0N	TTF605QLBP2EG201
20RVP9072-HT	P1D-6LRF	D2D2-14-14W	TTF610CBP2EG203S64
20RVS9072	P1D-6LRN	D2D2-16-16W	TTF610CBPBG241
20S4OMLOS	P1D-6LRN	D2D2-16-25W	TTF610CBPEG203
20S4OMXS	P1D-6LRNL	D2D2-25-25W	TTF610QBG1EG203
20S6MK4S	P1D-6LRNL	D2D2-30-30W	TTF610QBP2EG204
20S6MLOS	P1D-6LRV	D2I	TTF610QBP2EG20B
20SASR24MXN	P1D-6LRV	D300C2	TTF610QBS1EG203
20SASR24MXNS_14	P1D-6MRD	D300C2	TTF610QLBG1EG201
20SBAF05RVX	P1D-6MRD	D30D1VW1CNYP70	TTF610QLBG1EG243
20SBAM05EEXS_02	P1D-6MRF	D30D1VW2ENYP70	TTF610QLBG3BG201
20SBAM05EVX	P1D-6MRF	D30FPB60UB4NB03	TTF610QLBP2EG161
20SBAM05MEN	P1D-6MRH	D30FPE01UC4NB03	TTF610QLBP2EG203
20SBAM05MPN	P1D-6MRH	D30FPE50UA4NB03	TTF610QLBS1EG201
20SBAM05MPNS	P1D-6MRN	D30FPE50UB4NB03	TTF620QLBG1EG201
20SBAM05MPX	P1D-6MRN	D30SMSX	TTF620QLBP2EG203
20SBAM05MVX	P1D-6MRNL	D31DW001C1NJWTI6N	TTF702QLBP2EG203
20SBAM05RVX	P1D-6MRNL	D31DW001C1NUW	TTF7040WBG1BG243
20SBAM06MPN	P1D-6MRQ	D31DW001C1VTW	TTF7040WBPEG203
20SBAN10MPN	P1D-6MRQ	D31DW001C2NGWTI6N	TTF705QLBG1EG203

20SBAN10MPX	P1D-6MRV	D31DW001C2NJWI6N	TTF705QLBG2E2G243
20SBAW10EVX	P1D-6MRV	D31DW001C2NJWTI6N	TTF705QLBP2EG203
20SBAW10MED	P1D-6NRD	D31DW001C4NJEE	TTF705QLS1EG243S125
20SBAW10MEN	P1D-6NRD	D31DW001C4NJW	TTF710CBG1BG203
20SBAW10MPN	P1D-6NRF	D31DW001C4NJW3A	TTF710CBPBG243
20SBAW10MPNS	P1D-6NRF	D31DW001C4NJW3F	TTF710CBPEG203
20SBAW10MPX	P1D-6NRN	D31DW001C4NJW3K	TTF710QBG1EG203
20SBAW10MVN	P1D-6NRN	D31DW001C4NJWI2N	TTF710QBG1EG203S74
20SBAW10MVX	P1D-6NRNL	D31DW001C4NJWI5N	TTF710QBG1EG241
20SBAW10RVX	P1D-6NRNL	D31DW001C4NJWI6N	TTF710QBP2EG203
20SBIF05MPX	P1D-6NRV	D31DW001C4NJWTI6N	TTF710QBP2EG203S75
20SBIM05EVX	P1D-6NRV	D31DW001C4NTW	TTF710QBP2EG20B
20SBIM05MPN	P1D-6PRD	D31DW001C4NUWI3N	TTF710QBP2EG243
20SBIM05MPNS	P1D-6PRD	D31DW001C4NYW	TTF710QBP2EG244
20SBIM05MPX	P1D-6PRF	D31DW001C4VJW	TTF710QBP2EG24B
20SBIM05MVX	P1D-6PRF	D31DW001C5NJWI6N	TTF710QBPEG203
20SBIM05RCX	P1D-6PRN	D31DW001E1NJW	TTF710QBPEG243
20SBIM05RVX	P1D-6PRN	D31DW001F5NJW	TTF710QBS1EG243S66
20SBIW10EVX	P1D-6PRNL	D31DW001K1NJWI1N	TTF710QLBG1EG203
20SBIW10MED	P1D-6PRNL	D31DW001K1NJWI4N	TTF710QLBG1S70
20SBIW10MEN	P1D-6PRV	D31DW001K2NJW	TTF710QLBP2EG243
20SBIW10MPN	P1D-6PRV	D31DW001K2NJWI4N	TTF710QLBP2EG324
20SBIW10MPNS_01	P1D-6QRD	D31DW001K2NJWTI4N	TTF710QLBPEG203
20SBIW10MPX	P1D-6QRD	D31DW002C1NJEEX729	TTF710QLBS1EG203
20SBIW10MVN	P1D-6QRF	D31DW002C1NTW3RX729	TTF710QLBS1EG203S206
20SBIW10MVX	P1D-6QRF	D31DW002C5NJW	TTF7120WBP2EG241
20SBIW10RVX	P1D-6QRH	D31DW002C5NJW3B	TTF720QBG1EG243
20SBKO04EVX	P1D-6QRH	D31DW003C4NJW	TTF720QBPEG203S76
20SBKO04MPN	P1D-6QRN	D31DW003C4VJW	TTF720QBPEG243
20SBKO04MPX	P1D-6QRN	D31DW003C5NJWI6N	TTF720QLBP2EG243
20SBKO04MVN	P1D-6QRNL	D31DW004C1NJW	TTF802QLBP2EG323
20SBKO04REX	P1D-6QRNL	D31DW004C1NTW	TTF805QBG1EG204
20SBKO04RVX	P1D-6QRV	D31DW004C2NJW	TTF805QLBG1EG243
20SBKO05EVX	P1D-6QRV	D31DW004C2NJW3A	TTF805QLBP2EG203
20SBKO05MPN	P1D-6RRD	D31DW004C2NJW3B	TTF805QLBS1EG203
20SBKO05MPX	P1D-6RRD	D31DW004C2NJWTI6N	TTF805QLBS1EG243
20SBKO05RVX	P1D-6RRF	D31DW004C4NJDLJ5	TTF805QLVP2EG243
20SBKO06EVX	P1D-6RRF	D31DW004C4NJEE	TTF805QLVP2EG244
20SBKO06MEN	P1D-6RRN	D31DW004C4NJEEP	TTF805QLVP2EG245
20SBKO06MPC	P1D-6RRN	D31DW004C4NJW	TTF810QBG1EG241
20SBKO06MPN	P1D-6RRNL	D31DW004C4NJW3A	TTF810QBP2EG203S175
20SBKO06MPX	P1D-6RRNL	D31DW004C4NJW3B	TTF810QBP2EG243
20SBKO06MVN	P1D-6RRV	D31DW004C4NJW3F	TTF810QBP2HG241
20SBKO06MVX	P1D-6RRV	D31DW004C4NJW3K	TTF810QBPEG203S87
20SBKO06REX	P1D-8032DG-0050	D31DW004C4NJWI1N	TTF810QBPEG203S90
20SBKO06RVX	P1D-8032DG-0050	D31DW004C4NJWI2N	TTF810QBPEG241
20SBKO46MPNS	P1D-8032DG-0350	D31DW004C4NJWI3N4D	TTF810QBS1EG243
20SBKS04MPN	P1D-8032DG-0350	D31DW004C4NJWI4N	TTF810QLBG1EG203
20SBKS04MPX	P1D-8040DG-0025	D31DW004C4NJWI6N	TTF810QLBG1EG243
20SBKS04MVN	P1D-8040DG-0025	D31DW004C4NJWTI6N	TTF810QLBP2EG203
20SBKS04RVX	P1D-8040DG-0060	D31DW004C4NKW	TTF810QLBP2EG241
20SBKS05MPN	P1D-8040DG-0060	D31DW004C4NPEE	TTF810QLBP2EG243
20SBKS05MPX	P1D-8040DG-0100	D31DW004C4NSWX5099	TTF810QLBS1EG241

20SBKS05RVX	P1D-8040DG-0100	D31DW004C4NTEE	TTF810QLBS1EG243
20SBKS06EVX	P1D-8040FH-0160	D31DW004C4NTW	TTF820QLBP2EG201
20SBKS06MPN	P1D-8040FH-0160	D31DW004C4NTW3A	TTF820QLBP2EG243
20SBKS06MPX	P1D-8050DG-0075	D31DW004C4VJW	TTF910QLBP2EG243
20SBKS06RVX	P1D-8050DG-0075	D31DW004C4VJWI6N	TTF910QLBP2EG24A
20SBMP08MPX	P1D-8050DG-0125	D31DW004E4NJDLJ5	TU121/2
20SBTF03MPN	P1D-8050DG-0125	D31DW004K4NJWTI4N	TU163/4
20SBTF03MPNS	P1D-8050DG-0200	D31DW006E4NJW	TU201/2
20SBTF03MPX	P1D-8050DG-0200	D31DW008C5NJW	TU201/2OV
20SBTF03MVN	P1D-8050DG-0220	D31DW009C1NJWX729	TU201/2S
20SBTF03RVX	P1D-8050DG-0220	D31DW009C2NJW	TU203/4
20SBTF04EEX	P1D-8050DG-0250	D31DW009C2NJWTI6N	TU203/4OV
20SBTF04EVX	P1D-8050DG-0250	D31DW009C2NYW	TU20M24
20SBTF04MED	P1D-8050DG-0320	D31DW009C5NJW	TU20M24OV
20SBTF04MEN	P1D-8050DG-0320	D31DW011C1NJW	TU501/2
20SBTF04MPN	P1D-8050DG-0450	D31DW011C4NJDLJ3G	TU501/2OV
20SBTF04MPNS	P1D-8050DG-0450	D31DW011C4NJW	TU503/4
20SBTF04MPX	P1D-8050DG-0600	D31DW015C4NJW	TU503/4OV
20SBTF04MVN	P1D-8050DG-0600	D31DW015C4NJWI3NX129	TU601/4
20SBTF04MVX	P1D-8063AA-0500	D31DW020B1NJW	TU603/8
20SBTF04RVX	P1D-8063AA-0500	D31DW020B2NJW	TU651/4
20SBTF05MEN	P1D-8063DG-0025	D31DW020B2NJW3B	TU651/4OV
20SBTF05MPN	P1D-8063DG-0025	D31DW020B2NJWI5N	TU651/4OVSL
20SBTF05MPX	P1D-8063DG-0050	D31DW020B2NJWTI5N	TU651/4SL
20SBTF05MVN	P1D-8063DG-0050	D31DW020B4NJDLJ5	TU653/8
20SBTF05RVX	P1D-8063DG-0080	D31DW020B4NJEE	TU653/8OV
20SBTS03MPN	P1D-8063DG-0080	D31DW020B4NJW	TU653/8OVSL
20SBTS03MPX	P1D-8063DG-0100	D31DW020B4NJW3A	TU653/8SL
20SBTS04MPN	P1D-8063DG-0100	D31DW020B4NJW3F	TU65M14
20SBTS04MPX	P1D-8063DG-0150	D31DW020B4NJWTI5N	TU65M14OV
20SBTS06MPN	P1D-8063DG-0150	D31DW020B4NUWI5N	TU65M14OVSL
20SBTS06MPX	P1D-8063DG-0180	D31DW020B4VJW3F	TU65M14SL
20SC20-316	P1D-8063DG-0180	D31DW020B5NJW	TU65M16
20SFAF05MXN	P1D-8063DG-1000	D31DW020D1NJW	TU65M16OV
20SFAF05MXX	P1D-8063DG-1000	D31DW020D2NJW3A	TU701/4
20SFAM05EXX	P1D-8063DH-0080	D31DW020D4NJW	TU701/4OV
20SFAM05MXC	P1D-8063DH-0080	D31DW020D4NJW3A	TU701/4SL
20SFAM05MXD	P1D-8063FH-0125	D31DW020H4NJW	TU703/8
20SFAM05MXN	P1D-8063FH-0125	D31DW020H4NTEE	TU703/8OV
20SFAM05MXNS_01	P1D-8080DG-0140	D31DW021C2NJWTI6N	TU703/8OVSL
20SFAM05MXX	P1D-8080DG-0140	D31DW021C4NJW	TU703/8SL
20SFAM05MXXS	P1D-8080DG-0160	D31DW021C4NJW3F	TU901/2
20SFAM05RXX	P1D-8080DG-0160	D31DW021C4NJWI6N	TU901/2OV
20SFAM06MXN	P1D-8100AA-0320	D31DW021C5NJW	TU901/2OVSL
20SFAM06MXX	P1D-8100AA-0320	D31DW026D4NJW3C	TU901/2SL
20SFAM10MXXS	P1D-8100DG-0125	D31DW030H1NJWX729	TU901/4
20SFAN10MXN	P1D-8100DG-0125	D31DW031C2NJW1R	TU901/4OV
20SFAN10MXX	P1D-8100DG-0320	D31DW031C2NJW3F	TU901/4OVSL
20SFAN13MXX	P1D-8100DG-0320	D31DW032C4NJW	TU901/4SL
20SFAW10EXX	P1D-8100DG-0550	D31DW069B1NJWTI5N	TU903/8
20SFAW10MXC	P1D-8100DG-0550	D31DW069B2NJWTI5N	TU903/8OV
20SFAW10MXD	P1D-8125DG-0250	D31DW069B5NJWTI5N	TU903/8OVSL
20SFAW10MXN	P1D-8125DG-0250	D31DW069H2NJWI4N	TU903/8SL

20SFAW10MXNS_02	P1DAS080VS-02506NNNN	D31DW079C4NJWI3N	TU90M16
20SFAW10MXX	P1DAS080VS-02506NNNN	D31DW081C4NJW3A	TU90M16OV
20SFAW10RXX	P1D-B032MS-0050	D31DW081K2NJW3A	TU90M16OVSL
20SFIF05MXN	P1D-B032MS-0050	D31DW082C4NJDLJ5	TU90M16SL
20SFIF05MXX	P1D-B032MS-0080	D31DW082C4NJW3A	TU93/8
20SFIM05EXX	P1D-B032MS-0080	D31DW082C4NJW3F	TU951/2
20SFIM05MXN	P1D-B032MS-0100	D31DW082C4NTWT	TU951/2OV
20SFIM05MXX	P1D-B032MS-0100	D31FBA31CC4NKW0	TU951/2OVSL
20SFIM05RXX	P1D-B032MS-0125	D31FBB31CC1NF00	TU951/2SL
20SFIN10MXX	P1D-B032MS-0125	D31FBB31CC1NKW0	TU951/4
20SFIW10EXX	P1D-B032MS-0160	D31FBB31CC4NF00	TU951/4OV
20SFIW10MXN	P1D-B032MS-0160	D31FBB31CC4NG00	TU951/4SL
20SFIW10MXX	P1D-B032MS-0250	D31FBB31CC4NKW0	TU953/8
20SFIW10RXX	P1D-B032MS-0250	D31FBB31EC2NF00	TU953/8OV
20SFKO04EXX	P1D-B032MS-0350	D31FBB31EC4NF00	TU953/8OVSL
20SFKO04MXN	P1D-B032MS-0350	D31FBB32CC1NF00	TU953/8SL
20SFKO04MXX	P1D-B032MS-0600	D31FBB32CC1NKW0	TUBE-2H-50.8
20SFKO04MXXS_01	P1D-B032MS-0600	D31FBB32CC4NF00	TUBE-HMI-100.0
20SFKO04RXX	P1D-B040MS-0025	D31FBB32CC4NKW0	TV05/05
20SFKO05EXX	P1D-B040MS-0025	D31FBB32CC4NS00	TV05/05N
20SFKO05MXN	P1D-B040MS-0050	D31FBB32DC1NF00	TV05/06
20SFKO05MXX	P1D-B040MS-0050	D31FBB32DC4NS00	TV10/06
20SFKO05RXX	P1D-B040MS-0080	D31FBB32EC4NF00	TV10/08
20SFKO06EXX	P1D-B040MS-0080	D31FBE01CC1NF00	TV12013/45
20SFKO06MXD	P1D-B040MS-0100	D31FBE01CC1NJW0	TV12013/90
20SFKO06MXN	P1D-B040MS-0100	D31FBE01CC1NKW0	TV12016/45
20SFKO06MXX	P1D-B040MS-0125	D31FBE01CC1VF00	TV12016/90
20SFKO06RXX	P1D-B040MS-0125	D31FBE01CC2NF00	TV13/08
20SFKO36MXN	P1D-B040MS-0250	D31FBE01CC2NKW8	TV13/10
20SFKO36MXX	P1D-B040MS-0250	D31FBE01CC4NF00	TV2019/45
20SFKO46MXN	P1D-B040MS-0300	D31FBE01CC4NF08	TV2019/45OV
20SFKO46MXX	P1D-B040MS-0300	D31FBE01CC4NG00	TV2019/90
20SFKS04MXN	P1D-B040MS-0320	D31FBE01CC4NJW0	TV2019/90OV
20SFKS04MXX	P1D-B040MS-0320	D31FBE01CC4NKW0	TV5019/45
20SFKS04RXX	P1D-B040MS-0500	D31FBE01CC4NKW8	TV5019/45OV
20SFKS05MXN	P1D-B040MS-0500	D31FBE01CC4VF00	TV5019/90
20SFKS05MXX	P1D-B040MS-0600	D31FBE01CC5NF00	TV5019/90OV
20SFKS06MXN	P1D-B040MS-0600	D31FBE01CK2NKW8	TV6010/45
20SFKS06MXX	P1D-B040MS-0700	D31FBE01DC2NKW0	TV6010/90
20SFKS06RXX	P1D-B040MS-0700	D31FBE01DC4NF00	TV6510/45
20SFMP06MXX	P1D-B050MS-0025	D31FBE01DC4NKW0	TV6510/45OV
20SFRP04MPN	P1D-B050MS-0025	D31FBE01DK2NKW0	TV6510/45OVSL
20SFTF03EXX	P1D-B050MS-0050	D31FBE01EC2NF00	TV6510/45SL
20SFTF03MXC	P1D-B050MS-0050	D31FBE01EC2NKW8	TV6510/90
20SFTF03MXN	P1D-B050MS-0080	D31FBE01EC4NF00	TV6510/90OV
20SFTF03MXX	P1D-B050MS-0080	D31FBE01EC4NKW0	TV6510/90OVSL
20SFTF03RXX	P1D-B050MS-0100	D31FBE01EK4NKW0	TV6510/90SL
20SFTF04EXX	P1D-B050MS-0100	D31FBE02CC1NF00	TV7006/45
20SFTF04MXC	P1D-B050MS-0160	D31FBE02CC1NJW0	TV7006/45OV
20SFTF04MXD	P1D-B050MS-0160	D31FBE02CC2NKW0	TV7006/90
20SFTF04MXN	P1D-B050MS-0200	D31FBE02CC4NF00	TV7006/90OV
20SFTF04MXX	P1D-B050MS-0200	D31FBE02CC4NG00	TV7010/45
20SFTF04RXX	P1D-B050MS-0250	D31FBE02CC4NJE0EE	TV7010/45OV

20SFTF05EXX	P1D-B050MS-0250	D31FBE02CC4NJW0	TV7010/45OVSL
20SFTF05MXC	P1D-B050MS-0500	D31FBE02CC4NKW0	TV7010/45SL
20SFTF05MXN	P1D-B050MS-0500	D31FBE02CC4VS00	TV7010/90
20SFTF05MXX	P1D-B063MS-0040	D31FBE02DC1NKW0	TV7010/90OV
20SFTF05RXX	P1D-B063MS-0040	D31FBE02DC4NF00	TV7010/90OVSL
20SFTF08MXX	P1D-B063MS-0050	D31FBE02DC4NJE0EE	TV7010/90SL
20SFTS03MXN	P1D-B063MS-0050	D31FBE02DC4NKW0	TV8010/45
20SFTS03MXX	P1D-B063MS-0080	D31FBE02DC4NS00	TV8010/90
20SFTS04MXN	P1D-B063MS-0080	D31FBE02EC4NF00	TV8012/45
20SFTS04MXX	P1D-B063MS-0100	D31FBE02EC4NJE0EE	TV8012/90
20SFTS04RXX	P1D-B063MS-0100	D31FBE02EC4NJW0	TV9013/45
20SLC2-B-150	P1D-B063MS-0125	D31FBE02EC4NKW0	TV9013/45OV
20SLC2-B-75	P1D-B063MS-0125	D31FBE02EC4NW50	TV9013/45OVSL
20SM12071	P1D-B063MS-0160	D31FBE02EC4VKW0	TV9013/45SL
20SM12071-B	P1D-B063MS-0160	D31FBE02EK4NKW0	TV9013/90
20SM12072	P1D-B063MS-0200	D31FBE03CC4NKW0	TV9013/90OV
20SM12073	P1D-B063MS-0200	D31FBE06CC4NF00	TV9013/90OVSL
20SM12074	P1D-B063MS-0250	D31FBR31EC4NF00	TV9013/90SL
20SM12075	P1D-B063MS-0250	D31FHA31A2NB00	TV910/90
20SM12081	P1D-B063MS-0320	D31FHA31A2NB08X826	TV912/90
20SM12882	P1D-B063MS-0320	D31FHA31A4NB00	TV9510/45
20SM16071	P1D-B063MS-0400	D31FHA31C1NE00	TV9510/45OV
20SM16071-B	P1D-B063MS-0400	D31FHA31C2NB00	TV9510/45OVSL
20SM16071-TG	P1D-B063MS-0500	D31FHA31C4NB00	TV9510/45SL
20SM16072	P1D-B063MS-0500	D31FHA31C4VB00	TV9510/90
20SM16072-TG	P1D-B080MS-0025	D31FHA32A4NB00	TV9510/90OV
20SM16081	P1D-B080MS-0025	D31FHA32C4NB00	TV9510/90OVSL
20SM16082	P1D-B080MS-0040	D31FHA32C4VB00	TV9510/90SL
20SM16084	P1D-B080MS-0040	D31FHA60A1NB00	TV9513/45
20SM16085	P1D-B080MS-0060	D31FHA60A5NB00	TV9513/45OV
20SM16872	P1D-B080MS-0060	D31FHA60C4NB00	TV9513/45OVSL
20SM16882	P1D-B080MS-0080	D31FHA60C4NB20	TV9513/45SL
20SM4071	P1D-B080MS-0080	D31FHA60C5NB00	TV9513/90
20SM4071-GY	P1D-B080MS-0100	D31FHA61A4NB00	TV9513/90OV
20SM4072	P1D-B080MS-0100	D31FHA61A4NE00	TV9513/90OVSL
20SM4073	P1D-B080MS-0125	D31FHA61C1NB00	TV9513/90SL
20SM4074	P1D-B080MS-0125	D31FHA61C2NB00	TVDP-3200
20SM4075	P1D-B080MS-0160	D31FHA61C4NB00	TVU20M24/45
20SM4075-GY	P1D-B080MS-0160	D31FHA61C4VB00	TVU20M24/45OV
20SM4081	P1D-B080MS-0200	D31FHA82C1NB00	TVU20M24/90
20SM4082	P1D-B080MS-0200	D31FHB11C1NB00	TVU20M24/90OV
20SM4083	P1D-B080MS-0250	D31FHB11C4NB00	TVU651/4/45
20SM4084	P1D-B080MS-0250	D31FHB12C4NB00	TVU651/4/45OV
20SM4085	P1D-B080MS-0800	D31FHB31A1NB00	TVU651/4/90
20SM4872	P1D-B080MS-0800	D31FHB31A2NB00	TVU651/4/90OV
20SM4882	P1D-B080MS-1000	D31FHB31A4NB00	TVU653/8/45
20SM6071	P1D-B080MS-1000	D31FHB31A5NB00	TVU65M14/45
20SM6071-O1S	P1D-B080MS-1200	D31FHB31C1NB00	TVU65M14/45OV
20SM6072	P1D-B080MS-1200	D31FHB31C1NB08	TVU65M14/90
20SM6073	P1D-B080MS-1400	D31FHB31C1NE00	TVU65M14/90OV
20SM6074	P1D-B080MS-1400	D31FHB31C2NB00	TVU701/4/45
20SM6075	P1D-B100MS-0050	D31FHB31C2NB08	TVU701/4/45OV
20SM6081	P1D-B100MS-0050	D31FHB31C4NB00	TVU701/4/90

20SM6082	P1D-B100MS-0080	D31FHB31C4NS00	TVU701/4/90OV
20SM6084	P1D-B100MS-0080	D31FHB31C4VB00	TVU90M16/45
20SM6872	P1D-B100MS-0100	D31FHB31C5NB00	TVU90M16/45OV
20SM6882	P1D-B100MS-0100	D31FHB32A1NB00	TVU90M16/90
20SM9071	P1D-B100MS-0125	D31FHB32A2NB00	TVU90M16/90OV
20SM9071-B	P1D-B100MS-0125	D31FHB32A4NB00	TW02.75
20SM9071-GY	P1D-B100MS-0160	D31FHB32A4NE00	TW03.12
20SM9071-WO	P1D-B100MS-0160	D31FHB32A4NS00	TW03.86
20SM9072	P1D-B100MS-0200	D31FHB32A5NB00	TW04.25
20SM9072-LT	P1D-B100MS-0200	D31FHB32C1NB00	TW04.50
20SM9073	P1D-B100MS-0400	D31FHB32C2NB00	TW05.75
20SM9074	P1D-B100MS-0400	D31FHB32C2NE00	TW06.25
20SM9075	P1D-B100MS-0800	D31FHB32C4NB00	TW07.00
20SM9075-TG	P1D-B100MS-0800	D31FHB32C4NS00	TW07.50
20SM9081	P1D-B100MS-1000	D31FHB34C4NB00	TW10.00
20SM9082	P1D-B100MS-1000	D31FHB60A4NB00	TW12.00
20SM9082-LT	P1D-B100MS-1200	D31FHB60A5NB00	TW3LS20
20SM9083	P1D-B100MS-1200	D31FHB60C1NB00	TW3LS25
20SM9084	P1D-B100MS-1400	D31FHB60C4NB00	TW3LS30
20SM9085	P1D-B100MS-1400	D31FHB61A1NB00	TW3LS38
20SM9872	P1D-B100MS-2000	D31FHB61A2NB00	TW3LSS10
20SM9872-C1S	P1D-B100MS-2000	D31FHB61A4NB00	TW3LSS12
20SM9882	P1D-B125MS-0040	D31FHB61C1NB00	TW3LSS16
20SSKO06MXN	P1D-B125MS-0040	D31FHB61C2NB00	TW3LSS20
20TC12X	P1D-B125MS-0050	D31FHB61C4NB00	TW3LSS25
20TC16X	P1D-B125MS-0050	D31FHB61C5NB00	TW3LSS38
20TC4X	P1D-B125MS-0080	D31FHB63A5NB00	TW3LSS6
20TC6X	P1D-B125MS-0080	D31FHB63C4NB00	TWB02.75
20TC6X-K	P1D-B125MS-0100	D31FHB63C5NB00	TWB03.12
20TC9X	P1D-B125MS-0100	D31FHE01A1NB00	TWB03.86
20TT4LS	P1D-B125MS-0125	D31FHE01A1NE00	TWB04.25
20TT4MXSS	P1D-B125MS-0125	D31FHE01A2NB00	TWB05.50
20TT4XS	P1D-B125MS-0800	D31FHE01A2NB08X826	TWB06.25
20TTP4LS	P1D-B125MS-0800	D31FHE01A4NB00	TWB07.00
20TUR16-316	P1D-B125MS-1000	D31FHE01A4NE00	TWB10.00
20TUR8-316	P1D-B125MS-1000	D31FHE01A4VB00	TWB12.00
20UFX12	P1D-B125MS-1200	D31FHE01A5NB00	TWIN2NS
20UFX16	P1D-B125MS-1200	D31FHE01C1NB00	TWIN2-R53
20UFX16-K	P1D-B125MS-1400	D31FHE01C1NB08	TWIN5
20UFX16-SOG	P1D-B125MS-1400	D31FHE01C1NB08X826	TWIN5NS
20UFX4466	P1D-C032MS-0100NNCNN	D31FHE01C1NE00	TWIN5-R53/A/K006
20UFX6666	P1D-C032MS-0100NNCNN	D31FHE01C1NS00	TWIN8NCE
20UFX9966	P1D-C032MS-0125NNCNN	D31FHE01C2NB00	TWIN8NS
20V3MXS	P1D-C032MS-0125NNCNN	D31FHE01C2NB08X826	TWIN8-R53
20V4OMLOS	P1D-C032MS-0160TNGNN	D31FHE01C4NB00	TWIN8-R53/A/K006
20V4OMXS	P1D-C032MS-0160TNGNN	D31FHE01C4NB08	TXA08LSCFX
20WLNMLS	P1D-C032MSN0050	D31FHE01C4NE00	TXA12LSCFX
20WLNMS	P1D-C032MSN0050	D31FHE01C4NS00	TXA15LCFX
20WMK4WL4NMS	P1D-C032MSN0080	D31FHE01C4NS00XG010	TXA16SCFX
20WMLOWLNMLSS	P1D-C032MSN0080	D31FHE01C4VB00	TXA20SCFX
20WMTXWLNMB	P1D-C040AS-0060NN6NN	D31FHE01C4VE00	TXA25SCFX
20WMTXWLNMS	P1D-C040AS-0060NN6NN	D31FHE01C5NB00	TXA30SCFX
20WMTXWLNMSS	P1D-C040AS-0150NN6NN	D31FHE01C5VB00	TXA38SCFX

20XEMQ1SS	P1D-C040AS-0150NN6NN	D31FHE02A1NB00	TXA42LCFX
20XEMQ2CF	P1D-C040ASN0060	D31FHE02A4NB00	TXA44SS42
20XEMQ2SS	P1D-C040ASN0060	D31FHE02A4NE00X807	TXB10
2-1 FBZ-SS	P1D-C040MMN0100	D31FHE02A4NS00	TXB12
2-1 FH4BZ-SS	P1D-C040MMN0100	D31FHE02A5NB00	TXB16
2-1 HBZ-B	P1D-C040MS-0025DYHNN	D31FHE02C1NB00	TXB18
2-1 HBZ-SS	P1D-C040MS-0025DYHNN	D31FHE02C1NB08X826	TXB20
2-1 MHN-SS	P1D-C040MS-0160DYHNN	D31FHE02C1NS00	TXB25
2-1 RA-B	P1D-C040MS-0160DYHNN	D31FHE02C1VB00	TXB6
2-1 RA-SS	P1D-C040MS-0200DYHNN	D31FHE02C2NB00	TXB8
2-1 RB-SS	P1D-C040MS-0200DYHNN	D31FHE02C4NB00	TXS10
2-1 TRBZ-B	P1D-C040MS-0200NN7NN	D31FHE02C4NB08	TXS10BP
2-1 TRBZ-SS	P1D-C040MS-0200NN7NN	D31FHE02C4NE00	TXS12
2-1 Z2HLZ-1-SS	P1D-C040MS-0200NNCNN	D31FHE02C4NS00	TXS12BP
2-1 Z2HLZ-2-SS	P1D-C040MS-0200NNCNN	D31FHE02C4VB00	TXS14
2-1 Z2HLZ-3-SS	P1D-C040MS-0250DYHNN	D31FHE02C4VE00	TXS15
2-1 Z2HLZ-4-SS	P1D-C040MS-0250DYHNN	D31FHE02C5NB00	TXS15ZNFE3T
2-1 Z2HLZ7-1-SS	P1D-C040MS-0500DYHNN	D31FHE50A1NB00	TXS16
2-1 Z2HLZ7-2-SS	P1D-C040MS-0500DYHNN	D31FHE50A1VB00	TXS16BP
2-1 Z2HLZ7-3-SS	P1D-C040MSN0025	D31FHE50A2NB00	TXS18
2-1 Z2HLZ7-4-SS	P1D-C040MSN0025	D31FHE50A4NB00	TXS18BP
2-1 Z2HLZ7-SS	P1D-C040MSN0125ALNN6	D31FHE50A4NB20	TXS20
2-1 Z7HBZ7-SS	P1D-C040MSN0125ALNN6	D31FHE50A5NB00	TXS20BP
2-1 Z7HLZ7-SS	P1D-C040VS-0320NNRNN	D31FHE50B4NB00	TXS22
2-1 ZHLZ7-SS	P1D-C040VS-0320NNRNN	D31FHE50B5NB00	TXS25
2-1 ZHLZ-SS	P1D-C040VSN0125	D31FHE50C2NB00	TXS25BP
2-1/8 ZHBW2-SS	P1D-C040VSN0125	D31FHE50C2NB00X766	TXS28
2-1/8 ZHLW2-SS	P1D-C040WSN0500	D31FHE50C4NB00	TXS30
21000-00500	P1D-C040WSN0500	D31FHE50C4VB00	TXS32
21000-00500	P1D-C050AS-0550NN6NN	D31FHE50C5NB00	TXS35
21000-01800	P1D-C050AS-0550NN6NN	D31FHE52A1NB00	TXS38
21000-01800	P1D-C050ASN0400	D31FHE52A1NS00	TXS42
21007M-N	P1D-C050ASN0400	D31FHE52A2NB00	TXS6
21009M-N	P1D-C050MS-0050NN7NN	D31FHE52A4NB00	TXS6BP
21012S-B	P1D-C050MS-0050NN7NN	D31FHE52A4NE00	TXS8
21034-02260	P1D-C050MS-0100NNCNN	D31FHE52A4VB00	TXS8BP
21034-02260	P1D-C050MS-0100NNCNN	D31FHE52A4VS00	TXSS10
21034-03100	P1D-C050MS-0160DY8NN	D31FHE52A5NB00	TXSS12
21034-03100	P1D-C050MS-0160DY8NN	D31FHE52C1NB00	TXSS14
21034-04860	P1D-C050MS-0200DY8NN	D31FHE52C1NS00	TXSS15
21034-04860	P1D-C050MS-0200DY8NN	D31FHE52C2NB00	TXSS16
21037-02300	P1D-C050MS-0200NN8NN	D31FHE52C2NE00	TXSS18
21037-02300	P1D-C050MS-0200NN8NN	D31FHE52C2NS00	TXSS20
21037-02600	P1D-C050MS-0400NNHNN	D31FHE52C4NB00	TXSS22
21037-02600	P1D-C050MS-0400NNHNN	D31FHE52C4NE00	TXSS25
21037-02800	P1D-C050MSB0160NN6N8	D31FHE52C4VB00	TXSS28
21037-02800	P1D-C050MSB0160NN6N8	D31FHE52C5NB00	TXSS30
21037-03200	P1D-C050MSN0320	D31FHE52C5NE00	TXSS32
21037-03200	P1D-C050MSN0320	D31FHE52C5VB00	TXSS35
21037-03400	P1D-C063AS-0320NNSNN	D31FPA61EB2NK00	TXSS38
21037-03400	P1D-C063AS-0320NNSNN	D31FPB61CB4NK00	TXSS42
21042FIL	P1D-C063ASN0250	D31FPB61CB5NB00	TXSS6
21042FIL	P1D-C063ASN0250	D31FPB61DB5NB00	TXSS8

21043FIL	P1D-C063ASN0690	D31FPB61EA4NS00	TYS-M14-25-G1
21043FIL	P1D-C063ASN0690	D31FPB61EB1NK00	TYS-M14-25-G1
21046FIL	P1D-C063MS-0100NN7NN	D31FPB61EB1NK50	TYS-M14-45-G1
21046FIL	P1D-C063MS-0100NN7NN	D31FPB61EB4NK00	TYS-M14-45-G1
21047FIL	P1D-C063MSB0160NN6N8	D31FPB61EB4NS00	TYS-M14-65-G1
21047FIL	P1D-C063MSB0160NN6N8	D31FPB61EB5NK00	TYS-M14-65-G1
21056FIL	P1D-C063MSN0320	D31FPE01DC4NK00	TYS-M18-20-G2
21056FIL	P1D-C063MSN0320	D31FPE01DC4NS70	TYS-M18-20-G2
21061FIL	P1D-C063MSN0500	D31FPE01DC5NK00	TYS-M18-70-G2
21061FIL	P1D-C063MSN0500	D31FPE01EC4NK00	TYS-M18-70-G2
2107-16-12	P1D-C063VSN0200	D31FPE01EC5NK00	TYS-M5-10-M3
2107-16-16	P1D-C063VSN0200	D31FPE01EC5NS00	TYS-M5-10-M3
21071FIL	P1D-C080ASN0200	D31FPE02EC1NB00	TYS-M5-10-M5
21071FIL	P1D-C080ASN0200	D31FPE02EC1NK70	TYS-M5-10-M5
2107-20-20	P1D-C080MS-0160NN8NN	D31FPE02EC4HK00	TYS-M5-15-M3
2107-24-24	P1D-C080MS-0160NN8NN	D31FPE02EC4NK00	TYS-M5-15-M3
2107-32-32	P1D-C080MS-0480NNLNN	D31FPE02EC4NK50	TYS-M5-15-M5
2107-4-4-SS	P1D-C080MS-0480NNLNN	D31FPE52EA2NK00	TYS-M5-15-M5
21082FIL	P1D-C080MSN0080	D31FPE52EA4HK00	TYS-M5-3-M3
21082FIL	P1D-C080MSN0080	D31FPE52EA4NK00	TYS-M5-3-M3
21083FIL	P1D-C080MSN0125	D31FPE52EA4VK00	TYS-M8-15-M5
21083FIL	P1D-C080MSN0125	D31FPE52EB1NK00	TYS-M8-15-M5
21084FIL	P1D-C100ASN0200	D31FPE52EB2NK00	TYS-M8-30-M5
21084FIL	P1D-C100ASN0200	D31FPE52EB4NB00	TYS-M8-30-M5
21093-02200	P1D-C100MS-0100DSNNN	D31FPE52EB4NK00	TYS-M8-6-M5
21093-02200	P1D-C100MS-0100DSNNN	D31FPE52EB4NK00XG106	TYS-M8-6-M5
21097-00060	P1D-C100MS-0125NN7NN	D31FPE52EB4NK70	TZ 10-SS
21097-00060	P1D-C100MS-0125NN7NN	D31FPE52EB4VK00	TZ 10-T
210A	P1D-C100MS-0550NN7NN	D31FPE52EB5NK00	TZ 12-SS
210-QC	P1D-C100MS-0550NN7NN	D31FPE52EC4NK70	TZ 12-T
211-00002-3	P1D-C100MSN0080	D31FPE53DC4NK70	TZ 16-SS
21104-00404	P1D-C100MSN0080	D31FSA31B4NXW0	TZ 18-SS
21104-00404	P1D-C100MSN0200	D31FSA32B2NXW0	TZ 20-SS
21105-00540	P1D-C100MSN0200	D31FSB31B4NLW0	TZ 25-SS
21105-00540	P1D-C100MSN0730	D31FSB31B4NXW0	TZ 3-SS
21108FIL	P1D-C100MSN0730	D31FSB31B5NLW0	TZ 4-T
21108FIL	P1D-C125MS-0250NN7NN	D31FSB32B1NXW0	TZ 6-SS
21109FIL	P1D-C125MS-0250NN7NN	D31FSB32B2NLW0	TZ 6-T
21109FIL	P1D-CN20AS-0765NN7NN	D31FSB32B4NLW0	TZ 8-B
21111-00280	P1D-CN20AS-0765NN7NN	D31FSB32B4NXW0	TZ 8-SS
21111-00280	P1D-CNA5MS-0080NNNN7	D31FSB89B4NXW0	TZ 8-T
21112-00350	P1D-CNA5MS-0080NNNN7	D31FSE01B1NXW0	U033X51561D-483270C2
21112-00350	P1D-D063MR-0080	D31FSE01B2NLW0	U033X51561D-483270C2
21112-01463	P1D-D063MR-0080	D31FSE01B2NXW0	U033X5156-492310C2
21112-01463	P1DEC032AS-0190NN8NN	D31FSE01B4NLW0	U033X5156-492310C2
21112FIL	P1DEC032AS-0190NN8NN	D31FSE01B4NXW0	U033X5195
21112FIL	P1DEC050AS-0025NN7NN	D31FSE01B4VXW0	U033X5195
21113-00200	P1DEC050AS-0025NN7NN	D31FSE01B5NLW0	U033X5195-48287001N7
21113-00200	P1DEC050AS-0025NN8NN	D31FSE01B5NXW0	U033X5195-48287001N7
21113-00407	P1DEC050AS-0025NN8NN	D31FSE02B1NLW0	U033X5195-492310C2
21113-00407	P1DEC050AS-0080NN7NN	D31FSE02B1NXW0	U033X5195-492310C2
21113-00965	P1DEC050AS-0080NN7NN	D31FSE02B2NXW0	U033X5256-492310C2
21113-00965	P1DEC050AS-0080NN8NN	D31FSE02B4NLW0	U033X5256-492310C2

21114-00600	P1DEC050AS-0080NN8NN	D31FSE02B4NXW0	U0AB-4-025
21114-00600	P1DEC050AS-0450NN8NN	D31FSE02B4VXW0	U121K0302-N0-D100C2
21114-00656	P1DEC050AS-0450NN8NN	D31FSE02B5NXW0	U121K0302-N0-D100C2
21114-00656	P1DEC050AS-0750NN8NN	D31FSE03B4NLW0	U121V5595-49296501N7
2-111-N552-9	P1DEC050AS-0750NN8NN	D31FSE03B5NXW0	U121V5595-49296501N7
2-111-V894-9	P1DEC063AS-0180NN8NN	D31FSE04B4NXW0	U12-BAR-HANDLE-SS
21120FIL	P1DEC063AS-0180NN8NN	D31FSE06B4NXW0	U131F5695-496895C2
21120FIL	P1DEC100AS-0550NN8NN	D31FSE80B2NXW0	U131F5695-496895C2
21121FIL	P1DEC100AS-0550NN8NN	D31FSE80B4NXW0	U131K03
21121FIL	P1DES032AS-0050	D31FSE80B5NXW0	U131K03
21126FIL	P1DES032AS-0050	D31FSE81B4NXW0	U131V5490-2995-48358001N7
21126FIL	P1DES050AS-0080	D31NW001C4NJWI6N	U131V5490-2995-48358001N7
21127FIL	P1DES050AS-0080	D31NW003K4NJW	U131V5490-490885L8
21127FIL	P1DES050AS-0750	D31NW004C1NJEE3B	U131V5490-490885L8
21128FIL	P1DES050AS-0750	D31NW004C4NJEE3B	U131X1201
21128FIL	P1DES080AS-0540	D31NW004C4NJW3A	U131X1201
21130FIL	P1DES080AS-0540	D31NW004C5NJW	U131X1201-492310C2
21130FIL	P1D-F032AS-0300	D31NW009C2NJW	U131X1201-492310C2
21131FIL	P1D-F032AS-0300	D31NW009C6NJEE	U131X1201-49296501N7
21131FIL	P1D-F032AS-0450	D31NW011C4NJW	U131X1201-49296501N7
21133FIL	P1D-F032AS-0450	D31NW020B2NJW	U133V5464
21133FIL	P1D-F032MS-0040	D31NW020B4NJEE	U133V5464
21135FIL	P1D-F032MS-0040	D31NW020B4NJW	U133V5595-492310C2
21135FIL	P1D-F032MS-0050	D31NW030B4NJEE3FC999908	U133V5595-492310C2
21137FIL	P1D-F032MS-0050	D35LMSX	U133V5595-49296501N7
21137FIL	P1D-F032MS-0080	D36FHE01A1NB00	U133V5595-49296501N7
21138FIL	P1D-F032MS-0080	D36FHE01A4NB00	U133V56951D
21138FIL	P1D-F032MS-0100	D36FHE01B4NB00	U133V56951D
2-113-N552-9	P1D-F032MS-0100	D36FHE01D1NB20	U133V56951D-483270C5
2-113V894-9	P1D-F032MS-0125	D36FHE01D4NB00	U133V56951D-483270C5
2-113-V894-9	P1D-F032MS-0125	D36FHE01D4NB20	U133V5695-492210C2
21143FIL	P1D-F040AS-0025	D36FHE01D5NB20	U133V5695-492210C2
21143FIL	P1D-F040AS-0025	D36FHE50A4NB00	U133V5695-492310C2
2-114-N552-9	P1D-F040AS-0050	D36FHE50B4NB00	U133V5695-492310C2
21151FIL	P1D-F040AS-0050	D36FHE52A1NB00	U133V5695-49296501N7
21151FIL	P1D-F040AS-0060	D36FHE52C4NB00	U133V5695-49296501N7
2-116N552-90	P1D-F040AS-0060	D36FHE52D4NB00	U133X01
21172FIL	P1D-F040AS-0060RNNNN	D36FHE52D5NB00	U133X01
21172FIL	P1D-F040AS-0060RNNNN	D38SMSX	U133X01-496565N7
21179FIL	P1D-F040AS-0070	D39-08-FH00	U133X01-496565N7
21179FIL	P1D-F040AS-0070	D39-08-FH00	U133X5156
21186FIL	P1D-F040AS-0075	D39-08-FHG0	U133X5156
21186FIL	P1D-F040AS-0075	D39-08-FHG0	U133X5156-48287001N7
21187FIL	P1D-F040AS-0080	D39-08-FLG0	U133X5156-48287001N7
21187FIL	P1D-F040AS-0080	D39-08-FLG0	U133X5156-492310C2
21188FIL	P1D-F040AS-0085	D39-C6-FL00	U133X5156-492310C2
21188FIL	P1D-F040AS-0085	D39-C6-FL00	U133X5156-49296501N7
21189FIL	P1D-F040AS-0090	D39-C6-FLG0	U133X5156-49296501N7
21189FIL	P1D-F040AS-0090	D39-C6-FLG0	U133X5195
21190FIL	P1D-F040AS-0100	D39-C8-FL00	U133X5195
21190FIL	P1D-F040AS-0100	D39-C8-FL00	U133X5196
21196FIL	P1D-F040AS-0160	D39-C8-FLG0	U133X5196
21196FIL	P1D-F040AS-0160	D39-C8-FLG0	U133X51961D

21197FIL	P1D-F040AS-0180	D39D001A2N	U133X51961D
21197FIL	P1D-F040AS-0180	D39D004C4N	U133X51961D-48327002C2
21198FIL	P1D-F040AS-0200	D39D011C4N	U133X51961D-48327002C2
21198FIL	P1D-F040AS-0200	D39D020B2N	U133X51961D-4832703P
21199FIL	P1D-F040AS-0250	D39D020B4N	U133X51961D-4832703P
21199FIL	P1D-F040AS-0250	D39D081C4N3F	U133X51961D-483270C2
2-119-N552-9	P1D-F040AS-0500	D3B125NMK2	U133X51961D-483270C2
2-119-V894-9	P1D-F040AS-0500	D3DA020BN4L	U133X5196-492210C2
21200FIL	P1D-F040MS-0080	D3DD020HN4M	U133X5196-492210C2
21200FIL	P1D-F040MS-0080	D3DD026HN4M	U133X5196-492310C2
21201FIL	P1D-F040MS-0100	D3DDB020BN	U133X5196-492310C2
21201FIL	P1D-F040MS-0100	D3DDB020BN4M	U133X5196-492310C4
21202FIL	P1D-F040MS-0125	D3DDB020BNI2N	U133X5196-492310C4
21202FIL	P1D-F040MS-0125	D3DDB020BVX815	U133X5196-49296501N7
21202FIL	P1D-F040MSC0200NNNN6	D3DL001CN4J	U133X5196-49296501N7
21202FIL	P1D-F040MSC0200NNNN6	D3DL001CV4K	U133X5196-496700C2
21203FIL	P1D-F050AS-0025	D3DL001KN4J	U133X5196-496700C2
21203FIL	P1D-F050AS-0025	D3DL001NN4J	U133X5296
21204FIL	P1D-F050AS-0035	D3DL002CN4J	U133X5296
21204FIL	P1D-F050AS-0035	D3DL002NN4K	U133X52961D-483270C2
21205FIL	P1D-F050AS-0050	D3DL004CN4J	U133X52961D-483270C2
21205FIL	P1D-F050AS-0050	D3DL004CN4J42X868	U133X5296-492310C2
21210FIL	P1D-F050AS-0080	D3DL004CN4K	U133X5296-492310C2
21210FIL	P1D-F050AS-0080	D3DL004CV4J	U321H1590-48865001N7
21211FIL	P1D-F050AS-0100	D3DL009CN4J	U321H1590-48865001N7
21211FIL	P1D-F050AS-0100	D3DL009KN4J	U331BS9369
21213FIL	P1D-F050AS-0110	D3DL009NN4J	U331BS9369
21213FIL	P1D-F050AS-0110	D3DL009NV4J	U341N01
21214FIL	P1D-F050AS-0150	D3DL020BN4J	U341N01
21214FIL	P1D-F050AS-0150	D3DL020DN4J	U341N0250-4826063D
21216FIL	P1D-F050AS-0160	D3DL020DV4J	U341N0250-4826063D
21216FIL	P1D-F050AS-0160	D3DL030DN4K	U341N0250-8993-481045C2
21217FIL	P1D-F050AS-0220	D3DLB001CN4J	U341N0250-8993-481045C2
21217FIL	P1D-F050AS-0220	D3DLB001CV4J	U341N0250-8993-4889803D
21218FIL	P1D-F050AS-0280	D3DLB001EN4J	U341N0250-8993-4889803D
21218FIL	P1D-F050AS-0280	D3DLB001NN4J	U341N3250
21235FIL	P1D-F050AS-0300	D3DLB001NV4J	U341N3250
21235FIL	P1D-F050AS-0300	D3DLB002CN4J	U341N3250-2995-481865C2
21237FIL	P1D-F050AS-0400	D3DLB002CN4K	U341N3250-2995-481865C2
21237FIL	P1D-F050AS-0400	D3DLB002NN4JX976	U341N3250-495905C2
21240-00100	P1D-F050AS-0450	D3DLB004CN4J	U341N3250-495905C2
21240-00100	P1D-F050AS-0450	D3DLB004KN4J	U341N3295-49296501N7
21240-00300	P1D-F050AS-0650	D3DLB004NN4J	U341N3295-49296501N7
21240-00300	P1D-F050AS-0650	D3DLB009CN4J	U341P3250-2995-4818653D
21240-00400	P1D-F050AS-0700	D3DLB009CV4J	U341P3250-2995-4818653D
21240-00400	P1D-F050AS-0700	D3DLB009EN4J	U341P3295
21240-00454	P1D-F050AS-0810	D3DLB009NN4J	U341P3295
21240-00454	P1D-F050AS-0810	D3DLB020DN4J	U341P3295-492310C2
21240-00500	P1D-F050AS-0880	D3DP001C2N	U341P3295-492310C2
21240-00500	P1D-F050AS-0880	D3DP001K2N	U341P3295-49296501N7
21240-00514	P1D-F050AS-1030RNNNN	D3DP002C2N	U341P3295-49296501N7
21240-00514	P1D-F050AS-1030RNNNN	D3DP006C2N	U347P3250-495905K8
21240-00572	P1D-F050MS-0100	D3DP009C2N	U347P3250-495905K8

21240-00572	P1D-F050MS-0100	D3DP009F2N	UBACS
21240-00640	P1D-F050MS-0125	D3DP020B2N	UBA-SS
21240-00640	P1D-F050MS-0125	D3DP020D2N	UBS9002
21240-01100	P1D-F050MS-0160	D3DP020H2N	UBS9003
21240-01100	P1D-F050MS-0160	D3DP082A2N	UBS9005
21241-00910	P1D-F050MS-0200	D3DP101D2N	UCA 01
21241-00910	P1D-F050MS-0200	D3DW001CNGW	UCA 02
21243FIL	P1D-F050MS-0250	D3DW001CNGWC08	UCA 03
21243FIL	P1D-F050MS-0250	D3DW001CNJW	UCA 04
21246-00100	P1D-F050MS-0320	D3DW001CNJWC08	UCA 05
21246-00100	P1D-F050MS-0320	D3DW001ENJW	UCA-305
21246-00120	P1D-F050MSB0125NNNN8	D3DW001ENJWC08	UCA-625
21246-00120	P1D-F050MSB0125NNNN8	D3DW001ENJWTI5N	UC-R-1229-13
21246-00150	P1D-F050WS-0400	D3DW001KNGWI4N	UC-R-1229-16
21246-00150	P1D-F050WS-0400	D3DW001KNJW	UC-R-1229-25
21246-00410	P1D-F063AS-0020	D3DW001MNJWTI4N	UD05M
21246-00410	P1D-F063AS-0020	D3DW002CNJW	UD10
21247-00150	P1D-F063AS-0022	D3DW002CNJW4DC08	UD10M
21247-00150	P1D-F063AS-0022	D3DW002CNJWC08	UD12M
21247-00250	P1D-F063AS-0025	D3DW002ENJW	UD13
21247-00250	P1D-F063AS-0025	D3DW002ENJWC08	UD14M
21247-00332	P1D-F063AS-0080	D3DW002ENJWTI5N	UD16M
21247-00332	P1D-F063AS-0080	D3DW002ENJWTI5NC08	UD17
21247-00550	P1D-F063AS-0100	D3DW003CNJW	UD18M
21247-00550	P1D-F063AS-0100	D3DW004CNGWC08	UD21
21247-00800	P1D-F063AS-0180	D3DW004CNJW	UD22M
21247-00800	P1D-F063AS-0180	D3DW004CNJWC08	UD26
21248-00300	P1D-F063AS-0190	D3DW004CNUW	UD33
21248-00300	P1D-F063AS-0190	D3DW004CVJW	UD42
21248-00550	P1D-F063AS-0200	D3DW004CVJWC08	UEST20-11/4
21248-00550	P1D-F063AS-0200	D3DW004ENJWT	UEST-F-1 1/2
21248-01000	P1D-F063AS-0205	D3DW004KNJWC06	UEST-F-2
21248-01000	P1D-F063AS-0205	D3DW004KNJWI4N	UEST-T-1 1/4
21248-01981	P1D-F063AS-0250	D3DW006CNJW	UEST-T-1 1/4-LO
21248-01981	P1D-F063AS-0250	D3DW008CNGW	UEST-T-1/2ED
21249-00812	P1D-F063AS-0250RNNNN	D3DW008CNJW	UEST-T-2
21249-00812	P1D-F063AS-0250RNNNN	D3DW008CVGW	UEST-T-3/4
21257FIL	P1D-F063AS-0280	D3DW008KNJW	UEST-T-3/4ED
21257FIL	P1D-F063AS-0280	D3DW009C9NJW1PXG220	UHPLABEL-1
21258FIL	P1D-F063AS-0290	D3DW009CNGWC08	UL13
21258FIL	P1D-F063AS-0290	D3DW009CNJW	UL13/9
21259FIL	P1D-F063AS-0300	D3DW009CNJW4D	UL13R
21259FIL	P1D-F063AS-0300	D3DW009CNJWC08	UL17
2125-QC	P1D-F063AS-0450	D3DW009ENJWC08	UL21
21260FIL	P1D-F063AS-0450	D3DW009KNJW	ULR10MH
21260FIL	P1D-F063AS-0450RNNNN	D3DW009KNJWC08	UNAPPIS01
21279-00350	P1D-F063AS-0450RNNNN	D3DW00H9NJWI4NX935	UNC1/2-13X11/2
21279-00350	P1D-F063AS-0570	D3DW011CNJW	UNC1/2-13X13/4
21279-00400	P1D-F063AS-0570	D3DW011CNJWC08	UNC3/4-10X21/2
21279-00400	P1D-F063AS-0580	D3DW011CVJW	UNC3/4-10X23/4
21279-00500	P1D-F063AS-0580	D3DW014CNGWC08	UNC3/8-16X11/2
21279-00500	P1D-F063AS-0785RNNNN	D3DW014CNJWC08	UNC3/8-16X11/4
2-128-N552-9	P1D-F063AS-0785RNNNN	D3DW015CNJW	UNC5/16-18X11/4

212D-0198	P1D-F063AS-0850	D3DW015KNJW	UNC5/8-11X13/4
212FB	P1D-F063AS-0850	D3DW020B9NJW	UNC5/8-11X2
212-P0018-00001	P1D-F063AS-1000	D3DW020BNJW	UNC5/8-11X21/4
21309FIL	P1D-F063AS-1000	D3DW020BNJWC08	UNC7/16-14X11/2
21309FIL	P1D-F063HS-0200	D3DW020BNJWI2N	UNC7/16-14X13/4
213-10	P1D-F063HS-0200	D3DW020BNJWI5N	UPTH-11B-PW3
213-12	P1D-F063MS-0160	D3DW020BNJWI5NC08	UPTH-22B
21313FIL	P1D-F063MS-0160	D3DW020BNJWT	UR06M07S4N
21313FIL	P1D-F063MS-0200	D3DW020BNJWTI5N	UR06M17S4N
21315-00500	P1D-F063MS-0200	D3DW020BNJWTI5N42X758	UR06M35S4N
21315-00500	P1D-F063MS-0250	D3DW020BVJW	UR06M35S4V
21315-00600	P1D-F063MS-0250	D3DW020DNJW	UR10
21315-00600	P1D-F063MS-0400	D3DW020HNGW	UR10M10A4SN
21315-00900	P1D-F063MS-0400	D3DW020HNJW	UR10M21S4SN
21315-00900	P1D-F080AS-0025	D3DW020HVJW	UR10N
213-16	P1D-F080AS-0025	D3DW021C9NJW	UR10R
21317-04400	P1D-F080AS-0035	D3DW021CNJW	UR13
21317-04400	P1D-F080AS-0035	D3DW022CNJW	UR13/9
213-20	P1D-F080AS-0050	D3DW026BNJW	UR13/9N
213-24	P1D-F080AS-0050	D3DW026BNJWC08	UR13E
213-32	P1D-F080AS-0060	D3DW026BNJWI2N	UR13N
21337-00300	P1D-F080AS-0060	D3DW026BVJW	UR13R
21337-00300	P1D-F080AS-0140	D3DW026HNJW	UR17
213-4	P1D-F080AS-0140	D3DW030BNGW	UR17E
213-40	P1D-F080AS-0200	D3DW030BNGWI2N	UR17N
21342BFIL	P1D-F080AS-0200	D3DW030BNJW	UR17R
21342BFIL	P1D-F080AS-0300	D3DW030BNJWC08	UR17S
21342FIL	P1D-F080AS-0300	D3DW030BNJWI2N	UR21
21342FIL	P1D-F080MS-0200	D3DW030BNJWI5N	UR21E
21344FIL	P1D-F080MS-0200	D3DW030BNJWTI5N	UR21N
21344FIL	P1D-F100AS-0030	D3DW030BNUWC08	UR21R
21346FIL	P1D-F100AS-0030	D3DW030HNJW	US06M07L4N
21346FIL	P1D-F100AS-0080	D3DW030HNJWTI4N	US06M07S4N
21348-01190	P1D-F100AS-0080	D3DW034CNJW	US06M07S4V
21348-01190	P1D-F100AS-0100	D3DW042CNJWC08	US06M17A4N
213-5	P1D-F100AS-0100	D3DW069BNJWI5N	US10M17S4SN1JWS
21355-00475	P1D-F100AS-0125	D3DW069BNJWTI5N	US16E17S1SN1JW
21355-00475	P1D-F100AS-0125	D3DW071BNJWI5N	US25M07S1SN1JWS
213-6	P1D-F100AS-0150	D3DW071HNJW	US25M17S4SN1JW
21360FIL	P1D-F100AS-0150	D3DW071HNJWI4N	US25M17S4SN1UW
21360FIL	P1D-F100AS-0200	D3DW071HNJWTI4N	US32M07S4SN1JWS
21375-00475	P1D-F100AS-0200	D3DW071HNJWTI4NX5056	US32M17S4SN1JWS
21375-00475	P1D-F100AS-0320	D3DW080CNJW	US40E07S1SN1JW
21375-00575	P1D-F100AS-0320	D3DW081CNJW	US40E17L1SN1JW
21375-00575	P1D-F100AS-0550	D3DW081CNJWC08	US40E17S1SN1JW
21375-00800	P1D-F100AS-0550	D3DW081CNUWC08	US50E17S1SN1JW
21375-00800	P1D-F100AS-0580	D3DW082CNJW	USA/USB1X
21375-00850	P1D-F100AS-0580	D3DW082CNJWC08	USB2X
21375-00850	P1D-F100AS-0965	D3DW082CNJWT	USBTODRIVE
213-8	P1D-F100AS-0965	D3DW082CNUWC08	USC14571X
21407-01170	P1D-F100AS-0965RNNNN	D3DW101BNJWC08	USC1X
21407-01170	P1D-F100AS-0965RNNNN	D3DW101DNJWC08	USC44571X
21407-01270	P1D-F100AS-1190RNNNN	D3DW102CNJW	USC4X

21407-01270	P1D-F100AS-1190RNNNN	D3DW103CNJW	USC5X
21407-01470	P1D-F100MS-0100	D3FBA31MC0NKW0	USC6X
21407-01470	P1D-F100MS-0100	D3FBA31SC0NKW0	UT11002
21425-01500	P1D-F100MS-0320	D3FBA32MC0NKW0	UT11012
21425-01500	P1D-F100MS-0320	D3FBA32SC0NKW0	UT11018
21426AFIL	P1D-FM17MSB0080NNNN7	D3FBA80MC0NJW0	UT11019
21426AFIL	P1D-FM17MSB0080NNNN7	D3FBA81MC0NJW0	UT11036
21451-00325	P1D-FN17MSB0080NNNN7	D3FBB31MC0NKW0	UTK-10
21451-00325	P1D-FN17MSB0080NNNN7	D3FBB31MC0NS00	UTK-10
21452-01000	P1D-FNA5MS-0080	D3FBB31SC0NF00	UTK-20
21452-01000	P1D-FNA5MS-0080	D3FBB31SC0NKW0	UTK-20
21469-00250	P1D-FNA5MSB0080NNNN7	D3FBB32MC0NF00	UTK-40
21469-00250	P1D-FNA5MSB0080NNNN7	D3FBB32MC0NJW0	UTK-40
21470-01400	P1D-FNE5AS-0800RNNNN	D3FBB32MC0NKW0	UTY-10-M5-M5
21470-01400	P1D-FNE5AS-0800RNNNN	D3FBB32MC0NS00	UTY-10-M5-M5
21488FIL	P1DFS032MS-0160	D3FBB32SC0NF00	UTY-120-M18-G2
21488FIL	P1DFS032MS-0160	D3FBB32SC0NJW0	UTY-120-M18-G2
214FIL	P1DFS063FC-0092NFNNN	D3FBB32SC0NKW0	UTY-200-M18-G2
214FIL	P1DFS063FC-0092NFNNN	D3FBB32SC0NS00	UTY-200-M18-G2
21506-01500	P1DFT160MF-0100	D3FBB32SE0NKW0	UTY-20-M8-M5
21506-01500	P1DFT160MF-0100	D3FBE01MC0NF00	UTY-20-M8-M5
2150N-04V02	P1DFT160MF-0125	D3FBE01MC0NG00	UTY-40-M8-M5
21513-00820	P1DFT160MF-0125	D3FBE01MC0NJW3	UTY-40-M8-M5
21513-00820	P1DFT160MS-0025	D3FBE01MC0NKW0	UTY-60-M14-G1
21521-00565	P1DFT160MS-0025	D3FBE01MC0NKW3	UTY-60-M14-G1
21521-00565	P1DFT160MS-0050	D3FBE01ME0NF03	UTYK-120-G1
21543-00600	P1DFT160MS-0050	D3FBE01ME0NKW0	UTYK-120-G1
21543-00600	P1DFT160MS-0100	D3FBE01ME0NKW3	UTYK-60-G1
21567-00420	P1DFT160MS-0100	D3FBE01ME0VKW0	UTYK-60-G1
21567-00420	P1DFT160MS-0200	D3FBE01MK0NKW0	UTYS-40-30-M5
21568-00850	P1DFT160MS-0200	D3FBE01MK0NKW3	UTYS-40-30-M5
21568-00850	P1DFT160MS-0560	D3FBE01SC0NF00	UTYS-60-30-G1
21569-00900	P1DFT160MS-0560	D3FBE01SC0NF03	UTYS-60-30-G1
21569-00900	P1DFT160MS-0630	D3FBE01SC0NJW3	UYK-10
21570-00345	P1DFT160MS-0630	D3FBE01SC0NKW0	UYK-10
21570-00345	P1DFT160MS-0800	D3FBE01SC0NKW3	UYK-20
21571-00450	P1DFT160MS-0800	D3FBE01SC0NS00	UYK-20
21571-00450	P1DFT160MS-1000	D3FBE01SC0VKW0	UYK-40
21572-00750	P1DFT160MS-1000	D3FBE01SC0VS00	UYK-40
21572-00750	P1DFT160MS-1600	D3FBE01SE0NJW3	V005-21-01
21573FIL	P1DFT160MS-1600	D3FBE01SE0NKW0	V014-11
21573FIL	P1DFT160VF-0160	D3FBE01SE0NKW3	V015-11
215D-0198	P1DFT160VF-0160	D3FBE01SK0NF00	V016-11
215-P0018-00000	P1DFT160VF-0250	D3FBE01SK0NKW0	V018-11
215R30	P1DFT160VF-0250	D3FBE01SK0NKW3	V08-02-0000
215R30MTC	P1DFT200MS-0025	D3FBE01SK0VKW3	V08-02-0000
216-00003-3	P1DFT200MS-0025	D3FBE01UC0NF03	V08-C1-0000
216-10001-8	P1DFT200MS-0250	D3FBE01UC0NJW3	V08-C1-0000
216P-2	P1DFT200MS-0250	D3FBE01UC0NKW3	V08-C2-0000
216P-4	P1DFT200MS-0500	D3FBE01UC0NS03	V08-C2-0000
216P-6	P1DFT200MS-0500	D3FBE01UE0NKW3	V10LCFX
216P-8	P1DFT200VG-0500NDNNN	D3FBE01UK0NKW3	V10SCFX
218B	P1DFT200VG-0500NDNNN	D3FBE01UK0NKW3XG091	V12SCFX

218B-SS	P1DFT250MS-0030	D3FBE02MC0NF00	V14638
218BWHEEL	P1DFT250MS-0030	D3FBE02MC0NF03	V15LCFX
218B-WHEEL-SS	P1DFT250MS-0050	D3FBE02MC0NJW3	V16SCF
218P-2	P1DFT250MS-0050	D3FBE02MC0NKW0	V16SCFX
218P-4	P1DFT250MS-0100	D3FBE02MC0NKW3	V18-02-0000
218P-6	P1DFT250MS-0100	D3FBE02MC0NS03	V18-02-0000
218P-8	P1D-L032/S51524	D3FBE02MC0VKW0	V18-04-0000
219P-2	P1D-L032/S51524	D3FBE02ME0NKW0	V18-04-0000
219P-4	P1D-L032/S51525	D3FBE02ME0NKW3	V18-C2-0000
21KAAD10MPN	P1D-L032/S51525	D3FBE02ME0NS00	V18-C2-0000
21KAAD10MPX	P1D-L032FC-0100	D3FBE02ME0VS00	V18-C3-0000
21KAAD12MPN	P1D-L032FC-0100	D3FBE02MK0NJW3	V18-C3-0000
21KAAD12MPX	P1D-L032MC-0025	D3FBE02MK0NKW0	V18-C4-0000
21KAAD12MVN	P1D-L032MC-0025	D3FBE02SC0NF00	V18-C4-0000
21KAAD14MPN	P1D-L032MC-0030	D3FBE02SC0NJW3	V18-C4-0000-07
21KAAD14MPX	P1D-L032MC-0030	D3FBE02SC0NKW0	V18-C4-0000-07
21KAAK10MPX	P1D-L032MC-0030NNN6N	D3FBE02SC0NKW3	V18LCF
21KAAK13MPN	P1D-L032MC-0030NNN6N	D3FBE02SC0NS00	V18LCFX
21KAAK13MPX	P1D-L032MC-0050	D3FBE02SC0VKW0	V19-C3-0000
21KAAK17MPX	P1D-L032MC-0050	D3FBE02SC0VKW3	V19-C3-0000
21KAAM12RVX	P1D-L032MC-0065	D3FBE02SE0NKW0	V19-C4-0000
21KAAM14RVX	P1D-L032MC-0065	D3FBE02SE0NKW3	V19-C4-0000
21KAAN10MPN	P1D-L032MC-0080	D3FBE02SK0NJW3	V20SCFX
21KAAN10MPN8	P1D-L032MC-0080	D3FBE02UC0NF03	V22LCFX
21KAAN10MPX	P1D-L032MC-0100	D3FBE02UC0NJW3	V23-ACM2N0045-68A02AR8000
21KAAN10MPX0	P1D-L032MC-0100	D3FBE02UC0NKW3	V25SCFX
21KAAN10MPX6	P1D-L032MC-0100HNNNN	D3FBE02UC0NS03	V28-C3-0000
21KAAN13MEX	P1D-L032MC-0100HNNNN	D3FBE02UC0NW53	V28-C3-0000
21KAAN13MPN	P1D-L032MC-0160	D3FBE02UC0VKW3	V28-C4-0000
21KAAN13MPN6	P1D-L032MC-0160	D3FBE02UE0NKW3	V28-C4-0000
21KAAN13MPN8	P1D-L032MC-0200	D3FBE02UK0VKW3	V28-C4-0000-55
21KAAN13MPX	P1D-L032MC-0200	D3FBE04SC0NKW0	V28-C4-0000-55
21KAAN13MPX0	P1D-L032MC-0250HNNNN	D3FBE05SC0NKW0	V28-C6-0000
21KAAN13MPX6	P1D-L032MC-0250HNNNN	D3FEE01UC1NK03XG237	V28-C6-0000
21KAAN13MPX8	P1D-L032MC-0320	D3FPB31PC9NB00	V28-C6-0000-55
21KAAN13RVX0	P1D-L032MC-0320	D3FPB31YC9NB00	V28-C6-0000-55
21KAAW10EEX	P1D-L032MC-0400	D3FPB32PC9NB00	V28LCF
21KAAW10EVX	P1D-L032MC-0400	D3FPB32YC9HB50	V29-C4-0000
21KAAW10MEN	P1D-L040/S50887	D3FPB32YC9NB00	V29-C4-0000
21KAAW10MEX8	P1D-L040/S50887	D3FPB32YC9NB50	V29-C6-0000
21KAAW10MPN	P1D-L040/S50963	D3FPB32YC9NS00	V29-C6-0000
21KAAW10MPN0	P1D-L040/S50963	D3FPB32YC9NS00XG183	V32YBB549H
21KAAW10MPN3	P1D-L040/S51526	D3FPB60PA9NB00	V32YBB549H
21KAAW10MPN6	P1D-L040/S51526	D3FPB60PB9NB00	V4-HANDLE-BLACK
21KAAW10MPN8	P1D-L040FC-0100	D3FPB60PB9NB00XG183	V4-HANDLE-BLUE
21KAAW10MPNS	P1D-L040FC-0100	D3FPB60YA9NB00	V4-HANDLE-GREEN
21KAAW10MPNS_11	P1D-L040MC-0040	D3FPB60YB9NB00	V4-HANDLE-RED
21KAAW10MPNS_12	P1D-L040MC-0040	D3FPB60YB9NB00XG183	V4-HANDLE-WHITE
21KAAW10MPNS_13	P1D-L040MC-0050	D3FPB60YB9NS00XG183	V4-HANDLE-YELLOW
21KAAW10MPNS_14	P1D-L040MC-0050	D3FPB60YB9NS50	V4Q-HANDLE-BLACK
21KAAW10MPNS_17	P1D-L040MC-0050NFNNN	D3FPE01PC9NB00	V4Q-HANDLE-BLUE
21KAAW10MPNS_27	P1D-L040MC-0050NFNNN	D3FPE01PC9NB00X956	V4Q-HANDLE-GREEN
21KAAW10MPNS_37	P1D-L040MC-0080	D3FPE01PC9NS00	V4Q-HANDLE-RED

21KAAW10MPNS_44	P1D-L040MC-0080	D3FPE01YC9HB00	V4Q-HANDLE-WHITE
21KAAW10MPNS_45	P1D-L040MC-0090	D3FPE01YC9NB00	V4Q-HANDLE-YELLOW
21KAAW10MPNS_48	P1D-L040MC-0090	D3FPE01YC9NB50	V500P12
21KAAW10MPX	P1D-L040MC-0100	D3FPE01YC9NE00	V500P16
21KAAW10MPX0	P1D-L040MC-0100	D3FPE01YC9NS00	V500P601
21KAAW10MPX0S_01	P1D-L040MC-0120	D3FPE02PC9NB00	V500P8
21KAAW10MPX3	P1D-L040MC-0120	D3FPE02PC9NE50	V50H061103
21KAAW10MPX6	P1D-L040MC-0125	D3FPE02PC9VS00	V50H061103
21KAAW10MPX6S_02	P1D-L040MC-0125	D3FPE02YC9HB00	V50H061106
21KAAW10MPX8	P1D-L040MC-0125NDNNN	D3FPE02YC9HB00XG075	V50H061106
21KAAW10MPX8S_01	P1D-L040MC-0125NDNNN	D3FPE02YC9NB00	V50H061108
21KAAW10MPXS	P1D-L040MC-0150	D3FPE02YC9NS00	V50H061108
21KAAW10MPXS_03	P1D-L040MC-0150	D3FPE50PA9NB00	V5110
21KAAW10MPXS_04	P1D-L040MC-0160	D3FPE50PA9NB50	V5110
21KAAW10MPXS_05	P1D-L040MC-0160	D3FPE50PA9NS00	V5113
21KAAW10MPXS_07	P1D-L040MC-0200	D3FPE50PA9VB00	V5113
21KAAW10MPXS_10	P1D-L040MC-0200	D3FPE50PB9NB00	V5113V
21KAAW10MPXS_13	P1D-L040MC-0250	D3FPE50PB9NE00	V5113V
21KAAW10MPXS_14	P1D-L040MC-0250	D3FPE50PB9NS00	V5114
21KAAW10MPXS_28	P1D-L040MC-0280	D3FPE50PB9NS50	V5114
21KAAW10MPXS_30	P1D-L040MC-0280	D3FPE50YA9HB00	V5206
21KAAW10MPXS_32	P1D-L040MC-0320NG000	D3FPE50YA9NB00	V5206
21KAAW10MPXS_37	P1D-L040MC-0320NG000	D3FPE50YA9NB50	V5207
21KAAW10MPXS_99	P1D-L040MC-0400	D3FPE50YA9NB70	V5207
21KAAW10MVC	P1D-L040MC-0400	D3FPE50YA9NE50	V53810
21KAAW10MVN	P1D-L040MC-0700	D3FPE50YA9NS00	V53810
21KAAW10MVNS_04	P1D-L040MC-0700	D3FPE50YA9NS50	V560S053
21KAAW10MVX	P1D-L040MC-0850	D3FPE50YB9HB00	V560S053
21KAAW10MVX6	P1D-L040MC-0850	D3FPE50YB9HB70P00	V560S115
21KAAW10MVXS_01	P1D-L040MC-0900	D3FPE50YB9HB70P00XG280	V560S115
21KAAW10MVXS_04	P1D-L040MC-0900	D3FPE50YB9HB70P63	V57731F24
21KAAW10REX	P1D-L050FC-0100	D3FPE50YB9HB70P80	V57731F24
21KAAW10RVX	P1D-L050FC-0100	D3FPE50YB9HB70P80XG280	V6-HANDLE-BLACK
21KAAW10RVX6	P1D-L050MC-0020	D3FPE50YB9HB70Q63	V6-HANDLE-BLUE
21KAAW10RVX8	P1D-L050MC-0020	D3FPE50YB9HB70Q80	V6-HANDLE-GREEN
21KAAW10RVXS_02	P1D-L050MC-0050	D3FPE50YB9NB00	V6-HANDLE-RED
21KAAW10SPN	P1D-L050MC-0050	D3FPE50YB9NB00XG075	V6-HANDLE-YELLOW
21KAAW13EEX	P1D-L050MC-0060	D3FPE50YB9NB00XG183	V6Q-HANDLE-BLACK
21KAAW13EVX	P1D-L050MC-0060	D3FPE50YB9NB50	V6Q-HANDLE-BLUE
21KAAW13MEN	P1D-L050MC-0080	D3FPE50YB9NB70	V6Q-HANDLE-GREEN
21KAAW13MEX	P1D-L050MC-0080	D3FPE50YB9NB70Q80	V6Q-HANDLE-RED
21KAAW13MEX3	P1D-L050MC-0100	D3FPE50YB9NE00	V6Q-HANDLE-WHITE
21KAAW13MEX8	P1D-L050MC-0100	D3FPE50YB9NE00X807	V6Q-HANDLE-YELLOW
21KAAW13MPC	P1D-L050MC-0118	D3FPE50YB9NE50	V935LEF2100AB8B6A
21KAAW13MPN	P1D-L050MC-0118	D3FPE50YB9NS00	V935LEF2100AB8B6A
21KAAW13MPN0	P1D-L050MC-0125	D3FPE50YB9NS50	V935LEH2100AB8B6A
21KAAW13MPN3	P1D-L050MC-0125	D3FPE50YB9VB00	V935LEH2100AB8B6A
21KAAW13MPN6	P1D-L050MC-0200	D3FPE50YB9VB50	VA01PEP34A-1U
21KAAW13MPN8	P1D-L050MC-0200	D3FPE50YB9VS00	VA01PEP34A-1U
21KAAW13MPNS	P1D-L050MC-0225	D3FPE55PA9NB00	VA01PLC24-1P
21KAAW13MPNS_03	P1D-L050MC-0225	D3FPE55PB9NS00	VA01PLC24-1P
21KAAW13MPNS_04	P1D-L050MC-0250	D3FPE55YA9NB00	VA01PLC24-1PE
21KAAW13MPNS_08	P1D-L050MC-0250	D3FPE55YB9NB00	VA01PLC24-1PE

21KAAW13MPNS_19	P1D-L050MC-0280	D3FPE55YB9NB50	VA01PLC24-1PE-L5
21KAAW13MPX	P1D-L050MC-0280	D3FPE55YB9NE00	VA01PLC24-1PE-L5
21KAAW13MPX0	P1D-L050MC-0300	D3FPE55YB9NS00	VA01PLC24-1UE
21KAAW13MPX3	P1D-L050MC-0300	D3FPR60YA9NB00XG183	VA01PLC24-1UE
21KAAW13MPX6	P1D-L050MC-0300	D3FPR60YB9NB00XG183	VA01PLV23-1P
21KAAW13MPX8	P1D-L050MC-0300	D3HW20BNDC4XB671	VA01PLV23-1P
21KAAW13MPXS	P1D-L050MC-0320	D3HW20BNJC430XB671	VA01PSC24-1P
21KAAW13MPXS_02	P1D-L050MC-0320	D3HW20HNDC4XB671	VA01PSC24-1P
21KAAW13MPXS_03	P1D-L050MC-0350	D3HW20HNDEU30XB671	VA01PSC24-1PE
21KAAW13MPXS_04	P1D-L050MC-0350	D3HW20HNJEU30XB671	VA01PSC24-1PE
21KAAW13MPXS_05	P1D-L050MC-0400	D3MW001CNJW1P	VA01PSC24-1PR
21KAAW13MPXS_06	P1D-L050MC-0400	D3MW002CNJW1P	VA01PSC24-1PR
21KAAW13MPXS_07	P1D-L050MC-0500NG340	D3MW002CNKW1P	VA13/C0002B
21KAAW13MPXS_08	P1D-L050MC-0500NG340	D3MW004CNJW1P	VA13/C0002B
21KAAW13MPXS_15	P1D-L050MC-0550	D3MW008CNJW1P	VA13-AA
21KAAW13MPXS_17	P1D-L050MC-0550	D3MW008CNKW1P	VA13-AA
21KAAW13MPXS_27	P1D-L050MC-0600	D3MW020BNJW1P	VA13-AS
21KAAW13MPXS_30	P1D-L050MC-0600	D3MW020DVJW1P	VA13-AS
21KAAW13MPXS_99	P1D-L050MC-0900	D3MW022MNJW1P	VA13-ER-S-5
21KAAW13MVN	P1D-L050MC-0900	D3W001CNGW	VA13-ER-S-5
21KAAW13MVNS_01	P1D-L050MC-0950	D3W001CNGW42X859	VA13-HB2
21KAAW13MVNS_03	P1D-L050MC-0950	D3W001CNGWS4	VA13-HB2
21KAAW13MVX	P1D-L050MC-1000	D3W001CNJDJ5	VA13-HB24
21KAAW13MVX6	P1D-L050MC-1000	D3W001CNJW	VA13-HB24
21KAAW13MVXS_03	P1D-L050MC-1200	D3W001CNJW42X859	VA13-HIA4
21KAAW13REX	P1D-L050MC-1200	D3W001CNJW42X868	VA13-HIA4
21KAAW13RVX	P1D-L063FC-0050	D3W001CNJW42XG039	VA13-HIS4
21KAAW13RVX6	P1D-L063FC-0050	D3W001CNJW4D	VA13-HIS4
21KAAW13RVX8	P1D-L063FC-0100	D3W001CNJWS4	VA13-HIS4A06
21KAAW13RVXS_01	P1D-L063FC-0100	D3W001CNJWS7	VA13-HIS4A06
21KAAW13SPN	P1D-L063MC-0025	D3W001CNJWT	VA13-IA
21KAAW17EVX	P1D-L063MC-0025	D3W001CNJWTX5448	VA13-IA
21KAAW17MPN	P1D-L063MC-0030	D3W001CNJWX5448	VA13-II
21KAAW17MPN3	P1D-L063MC-0030	D3W001CNJWX624	VA13-II
21KAAW17MPN6	P1D-L063MC-0060	D3W001CNJWX651	VA13-IS
21KAAW17MPX	P1D-L063MC-0060	D3W001CNKW	VA13-IS
21KAAW17MPX6	P1D-L063MC-0080	D3W001CNKW42X859	VA13-KL2
21KAAW17MPXS_01	P1D-L063MC-0080	D3W001CNSWX610	VA13-KL2
21KAAW17MPXS_03	P1D-L063MC-0100	D3W001CNTW	VA13-KL24
21KAAW17MPXS_04	P1D-L063MC-0100	D3W001CNUW42X859	VA13-KL24
21KAAW17MPXS_07	P1D-L063MC-0125	D3W001CNYW	VA13-KL2A
21KAAW17MPXS_08	P1D-L063MC-0125	D3W001CVJW	VA13-KL2A
21KAAW17MPXS_13	P1D-L063MC-0160	D3W001ENGW	VA13-KL2A4
21KAAW17MVX	P1D-L063MC-0160	D3W001ENGWTI5N	VA13-KL2A4
21KAAW17RVX	P1D-L063MC-0200	D3W001ENJW	VA13-KL2B
21KAAW17RVXS	P1D-L063MC-0200	D3W001ENJW4D	VA13-KL2B
21KAIK10MPX	P1D-L063MC-0300	D3W001ENJWI5N	VA13-KS
21KAIK13MPX	P1D-L063MC-0300	D3W001ENJWS4	VA13-KS
21KAIM12MPN	P1D-L063MC-0320	D3W001ENJWTI5N	VA13-KS4
21KAIM12MPX	P1D-L063MC-0320	D3W001ENKW	VA13-KS4
21KAIM12RVX	P1D-L063MC-0350	D3W001ENTW	VA13-LRS
21KAIM14MPN	P1D-L063MC-0350	D3W001ENYW	VA13-LRS
21KAIM14MPX	P1D-L063MC-0500	D3W001EVJWI5N	VA13-RWG

21KAIM14RVX	P1D-L063MC-0500	D3W001FNJW	VA13-RWG
21KAIN10MPN	P1D-L063MC-0500NG384	D3W001FNJW4D	VA13-UWS
21KAIN10MPX	P1D-L063MC-0500NG384	D3W001FNJWI2N	VA13-UWS
21KAIN10MPX6	P1D-L063MC-0700	D3W001FNJWI5N	VA13-WGR
21KAIN10MPX8	P1D-L063MC-0700	D3W001FNYW	VA13-WGR
21KAIN13MPN	P1D-L063MC-1350	D3W001KNGW	VA13-WS
21KAIN13MPX	P1D-L063MC-1350	D3W001KNJW	VA13-WS
21KAIN13MPX0	P1D-L063MR-0450	D3W001KNJWI1N	VA15-AA
21KAIN13MPX3	P1D-L063MR-0450	D3W001KNJWI4N	VA15-AA
21KAIN13MPX6	P1D-L080FC-0100	D3W001KNJWS4	VA15-ADA
21KAIN13MPX8	P1D-L080FC-0100	D3W001KNJWT	VA15-ADA
21KAIW10EEX	P1D-L080MC-0025	D3W001KNJWTI4N	VA15-AS
21KAIW10EVX	P1D-L080MC-0025	D3W001KNKW	VA15-AS
21KAIW10MED	P1D-L080MC-0080	D3W001KNTW	VA15-ER-ER-5
21KAIW10MEX	P1D-L080MC-0080	D3W001KNYW	VA15-ER-ER-5
21KAIW10MPC	P1D-L080MC-0100	D3W002CNGW	VA15-ER-S-5
21KAIW10MPN	P1D-L080MC-0100	D3W002CNGW42X859	VA15-ER-S-5
21KAIW10MPN0	P1D-L080MC-0150	D3W002CNGWS4	VA15-HB2
21KAIW10MPN3	P1D-L080MC-0150	D3W002CNJW	VA15-HB2
21KAIW10MPN6	P1D-L080MC-0200	D3W002CNJW42X859	VA15-HB24
21KAIW10MPN8	P1D-L080MC-0200	D3W002CNJW4D	VA15-HB24
21KAIW10MPNS	P1D-L080MC-0340	D3W002CNJWS4	VA15-HB34
21KAIW10MPNS_02	P1D-L080MC-0340	D3W002CNJWS7	VA15-HB34
21KAIW10MPNS_08	P1D-L080MC-0500	D3W002CNJWX651	VA15-HC4
21KAIW10MPNS_09	P1D-L080MC-0500	D3W002CNJWX903	VA15-HC4
21KAIW10MPNS_10	P1D-L080MC-0500	D3W002CNKW	VA15-HIS4
21KAIW10MPNS_12	P1D-L080MC-0500	D3W002CNKW42X859	VA15-HIS4
21KAIW10MPX	P1D-L080MC-0800	D3W002CNKWS7	VA15-HIS4-LT
21KAIW10MPX0	P1D-L080MC-0800	D3W002CNTW	VA15-HIS4-LT
21KAIW10MPX3	P1D-L080MC-1000	D3W002CNUW42X859	VA15-II
21KAIW10MPX6	P1D-L080MC-1000	D3W002CNUWS4	VA15-II
21KAIW10MPX8	P1D-L080MC-1000NG000	D3W002CNYW	VA15-IS
21KAIW10MPXS_01	P1D-L080MC-1000NG000	D3W002CVJW	VA15-IS
21KAIW10MPXS_04	P1D-L080MC-2000	D3W002CVJWS4	VA15-KL2
21KAIW10MPXS_99	P1D-L080MC-2000	D3W002ENGW42X859	VA15-KL2
21KAIW10MVN	P1D-L100FC-0100	D3W002ENJDJ5	VA15-KL24
21KAIW10MVX	P1D-L100FC-0100	D3W002ENJW	VA15-KL24
21KAIW10REX	P1D-L100MC-0050	D3W002ENJW42X859	VA15-KL2A4
21KAIW10RVX	P1D-L100MC-0050	D3W002ENJW4D	VA15-KL2A4
21KAIW10RVX0	P1D-L100MC-0060	D3W002ENJWI2N	VA15-KS4
21KAIW10RVX3	P1D-L100MC-0060	D3W002ENJWS4	VA15-KS4
21KAIW10RVX6	P1D-L100MC-0080	D3W002ENJWTI5N	VA15-WGR
21KAIW10RVX8	P1D-L100MC-0080	D3W002ENJWX903	VA15-WGR
21KAIW10RVXS_01	P1D-L100MC-0100	D3W002ENKW	VA15-WS
21KAIW10SPN	P1D-L100MC-0100	D3W002ENKW42X859	VA15-WS
21KAIW13EEX	P1D-L100MC-0125	D3W002ENTW	VA15-XHB34
21KAIW13EVX	P1D-L100MC-0125	D3W002ENUWS4	VA15-XHB34
21KAIW13EVXS	P1D-L100MC-0140	D3W002ENYW	VA15-XHC4
21KAIW13MEN	P1D-L100MC-0140	D3W002EVJW	VA15-XHC4
21KAIW13MEX	P1D-L100MC-0160	D3W002KNJW	VA33D-XX2-B07
21KAIW13MEX8	P1D-L100MC-0160	D3W002KNJW42X868	VA33D-XX2-B07
21KAIW13MPC	P1D-L100MC-0200	D3W002KNJWI4N	VB025A06VG
21KAIW13MPN	P1D-L100MC-0200	D3W002KNJWS4	VB025A06VGZ

21KAIW13MPN0	P1D-L100MC-0250	D3W002KNKW	VB025K06VG
21KAIW13MPN3	P1D-L100MC-0250	D3W002KNTW	VB064A06VG
21KAIW13MPN6	P1D-L100MC-0250NG000	D3W002KVJW	VB064A06VGZ
21KAIW13MPN8	P1D-L100MC-0250NG000	D3W003CNJW	VB064A10VM
21KAIW13MPNS	P1D-L100MC-0320	D3W003CNJW42X859	VB064A10VMZ
21KAIW13MPNS_07	P1D-L100MC-0320	D3W003CNKW	VB064K06VG
21KAIW13MPNS_08	P1D-L100MC-0400	D3W003CNTW	VB10
21KAIW13MPNS_19	P1D-L100MC-0400	D3W003CNYW	VB10E
21KAIW13MPX	P1D-L100MC-0500	D3W003CVJW	VB10S
21KAIW13MPX0	P1D-L100MC-0500	D3W003CVTW	VB125A10VM
21KAIW13MPX3	P1D-L125MC-0100	D3W003FNJW	VB12-Q-NQ-5
21KAIW13MPX6	P1D-L125MC-0100	D3W003FNJW42X859	VB12-Q-NQ-5
21KAIW13MPX8	P1D-L125MC-0250	D3W003KNJW	VB13
21KAIW13MPXS_02	P1D-L125MC-0250	D3W004CNGW	VB13E
21KAIW13MPXS_03	P1D-L125MC-0300	D3W004CNGW42X859	VB13-ESC106C2A
21KAIW13MPXS_04	P1D-L125MC-0300	D3W004CNJDJ5	VB13-ESC106C2A
21KAIW13MPXS_12	P1D-L125MC-0320	D3W004CNJW	VB13-ESC106F2A
21KAIW13MPXS_13	P1D-L125MC-0320	D3W004CNJW42X859	VB13-ESC106F2A
21KAIW13MPXS_99	P1D-L125MC-0400	D3W004CNJW42X868	VB13-ESC106J2A
21KAIW13MVN	P1D-L125MC-0400	D3W004CNJW4D	VB13-ESC106J2A
21KAIW13MVN6	P1D-L125MC-0420NG000	D3W004CNJWI3N	VB13-Q1-Q2-5+F00
21KAIW13MVNS	P1D-L125MC-0420NG000	D3W004CNJWS4	VB13-Q1-Q2-5+F00
21KAIW13MVNS_01	P1D-L125MC-0750CG350	D3W004CNJWS7	VB160A06VG
21KAIW13MVNS_03	P1D-L125MC-0750CG350	D3W004CNJWT	VB160A06VGZ
21KAIW13MVX	P1D-L125MC-0750CG350	D3W004CNJWX651	VB17
21KAIW13MVX6	P1D-L125MC-0750CG350	D3W004CNJWXG068	VB17E
21KAIW13REX	P1D-L125MC-0750CG360	D3W004CNKW	VB21
21KAIW13RKX	P1D-L125MC-0750CG360	D3W004CNKW42X859	VB210A06VG
21KAIW13RVX	P1DLL032MC-0080	D3W004CNTW	VB210A06VGX923
21KAIW13RVXS	P1DLL032MC-0080	D3W004CNTW42X868	VB210A10VM
21KAIW13SPN	P1DLL032MC-0200	D3W004CNUW	VB210A10VMX898
21KAIW17EKX	P1DLL032MC-0200	D3W004CNUW42X859	VB21E
21KAIW17EVX	P1DLL032MC-0320	D3W004CNUWS4	VB22-Q-NQ-5
21KAIW17MPN	P1DLL032MC-0320	D3W004CNYW	VB22-Q-NQ-5
21KAIW17MPNS	P1DLL040MC-0025	D3W004CVGW	VB33E
21KAIW17MPNS_05	P1DLL040MC-0025	D3W004CVJW	VB350A06VG
21KAIW17MPX	P1DLL040MC-0050	D3W004CVJWS4	VB350A06VGX923
21KAIW17MPXS_01	P1DLL040MC-0050	D3W004CVJWS7	VB350A06VM
21KAIW17MPXS_09	P1DLL040MC-0080	D3W004CVTW	VB363C
21KAIW17MVXS	P1DLL040MC-0080	D3W004ENGW	VB363C
21KAIW17REX	P1DLL040MC-0100	D3W004ENJW	VB366C
21KAIW17RVX	P1DLL040MC-0100	D3W004ENJWS4	VB366C
21KAIW17RVXS	P1DLL040MC-0120	D3W004ENKW	VB369C
21KAKE06MPN	P1DLL040MC-0120	D3W004ENTW	VB369C
21KAKE06MPX	P1DLL040MC-0250	D3W004EVJW	VB42/S50897
21KAKE08MPN	P1DLL040MC-0250	D3W004FNJW	VB42/S50897
21KAKE08MPX	P1DLL040MC-0320	D3W004FNTW	VB42-Q-NQ-5
21KAKK06MEN	P1DLL040MC-0320	D3W004KNJW	VB42-Q-NQ-5
21KAKK06MPN	P1DLL040MC-0400	D3W004KNJWS4	VB4812C
21KAKK06MPNS	P1DLL040MC-0400	D3W004KNJWX651	VB4812C
21KAKK06MPX	P1DLL050MC-0080	D3W004KNKW	VB483C
21KAKK08MPN	P1DLL050MC-0080	D3W004KNTW	VB483C
21KAKK08MPX	P1DLL050MC-0125	D3W005CNJW	VB486C

21KAKK08MPX0S	P1DLL050MC-0125	D3W005ENJW	VB486C
21KAKK08MPX0S_01	P1DLL050MC-0160	D3W005MNKW	VB489C
21KAKO06EEXS	P1DLL050MC-0160	D3W006CNGW42X859	VB489C
21KAKO06EVX	P1DLL050MC-0300	D3W006CNJW	VB6012C
21KAKO06EVXS_01	P1DLL050MC-0300	D3W006CNSWX610	VB6012C
21KAKO06MEX	P1DLL063MC-0040	D3W006CNTW	VB606C
21KAKO06MPC	P1DLL063MC-0040	D3W006ENJW	VB606C
21KAKO06MPN	P1DLL063MC-0100	D3W006ENUW42X758	VB609C
21KAKO06MPN0	P1DLL063MC-0100	D3W006ENYW	VB609C
21KAKO06MPN3	P1DLL063MC-0160	D3W006KNJW	VBG16-5001-01
21KAKO06MPN6	P1DLL063MC-0160	D3W006KNJWTI4N	VBG16-5001-01
21KAKO06MPN8	P1DLL063MC-0250	D3W007CNGW	VBG16-5002-LRE
21KAKO06MPNS	P1DLL063MC-0250	D3W007CNJW	VBG16-5002-LRE
21KAKO06MPNS_15	P1DLL063MC-0500	D3W007CNTW	VBH483C
21KAKO06MPX	P1DLL063MC-0500	D3W007ENJW	VBH483C
21KAKO06MPX0	P1DLL080MC-0060	D3W008CNGW	VBH603C
21KAKO06MPX3	P1DLL080MC-0060	D3W008CNGW42X859	VBH603C
21KAKO06MPX6	P1DLL080MC-0125	D3W008CNJW	VBH606C
21KAKO06MPX8	P1DLL080MC-0125	D3W008CNJW42X859	VBH606C
21KAKO06MPXS_01	P1DLL080MC-0250	D3W008CNJW42X868	VBS
21KAKO06MPXS_03	P1DLL080MC-0250	D3W008CNJWS4	VBY064A06N
21KAKO06MVN	P1DLL080MC-0400	D3W008CNJWS7	VBY064A06V
21KAKO06MVNS_01	P1DLL080MC-0400	D3W008CNKW	VBY064A10N
21KAKO06MVX	P1DLL080MC-0500	D3W008CNKW42X859	VBY064A10V
21KAKO06RVX	P1DLL080MC-0500	D3W008CNKW42X868	VBY064H06N
21KAKO06RVX6	P1DLL100MC-0080	D3W008CNSWX610	VBY064H10N
21KAKO06RVX8	P1DLL100MC-0080	D3W008CNTW	VBY064K06N
21KAKO06RVXS	P1DLL100MC-0125	D3W008CNUW42X859	VBY064K06V
21KAKO08EVX	P1DLL100MC-0125	D3W008CNYW	VBY064K10N
21KAKO08MEN	P1DLL100MC-0160	D3W008CVJW	VBY064K10V
21KAKO08MPC0	P1DLL100MC-0160	D3W008ENJW	VBY064L06N
21KAKO08MPC8	P1DLL100MC-0280	D3W008ENKW	VBY064L10N
21KAKO08MPN	P1DLL100MC-0280	D3W008ENTW	VBY064L10V
21KAKO08MPN0	P1DLL100MC-0320	D3W008EVJW	VBY100K06N
21KAKO08MPN3	P1DLL100MC-0320	D3W008FNJW	VBY100L06N
21KAKO08MPN6	P1DLL100MC-0350	D3W008KNJW	VBY100L06V
21KAKO08MPN8	P1DLL100MC-0350	D3W008KNJW42X868	VBY100L10N
21KAKO08MPNS	P1DLL100MC-0500	D3W008KNKW	VBY160A06N
21KAKO08MPNS_06	P1DLL100MC-0500	D3W008KNTW	VBY160A06V
21KAKO08MPX	P1DLL125MC-0160	D3W009CNGW	VBY160A10N
21KAKO08MPX0	P1DLL125MC-0160	D3W009CNGWS4	VBY160A10V
21KAKO08MPX3	P1D-LL14MC-0400	D3W009CNJW	VBY160H10N
21KAKO08MPX6	P1D-LL14MC-0400	D3W009CNJW42X868	VBY160K06N
21KAKO08MPX8	P1D-LL80MC-0650	D3W009CNJW4D	VBY160K06V
21KAKO08MPXS_01	P1D-LL80MC-0650	D3W009CNJWS4	VBY160K10N
21KAKO08MPXS_03	P1D-LQA4MC-0800	D3W009CNJWS7	VBY160L06N
21KAKO08MVN	P1D-LQA4MC-0800	D3W009CNJWT	VBY160L06V
21KAKO08MVX	P1D-M100MC-0200	D3W009CNKW	VBY160L10C2X866
21KAKO08RVX	P1D-M100MC-0200	D3W009CNTW	VBY160L10N
21KAKO08RVXS_01	P1D-M100MC-0250	D3W009CNTW42X868	VBY210A06N
21KAKO46MPN	P1D-M100MC-0250	D3W009CNYW	VBY210A10N
21KAKO46MPX	P1D-M100MC-0320	D3W009CVAW42X868	VBY210H06N
21KAKO46RVX	P1D-M100MC-0320	D3W009CVJW	VBY210K06N

21KAKS06EVX	P1D-M100MC-0450	D3W009ENJW	VBY210K06V
21KAKS06MPC	P1D-M100MC-0450	D3W009ENJWS4	VBY210K10N
21KAKS06MPC0	P1D-Q032AS-0275	D3W009ENKW	VBY210L06N
21KAKS06MPC8	P1D-Q032AS-0275	D3W009ENTW	VBY210L06V
21KAKS06MPD	P1D-Q032MS-0275	D3W009KNGW	VBY210L10N
21KAKS06MPN	P1D-Q032MS-0275	D3W009KNJW	VBY315A06N
21KAKS06MPN0	P1D-Q040AS-0020	D3W009KNJW42X868	VBY315A10N
21KAKS06MPN3	P1D-Q040AS-0020	D3W009KNJWS4	VBY315A10V
21KAKS06MPN6	P1D-Q040AS-0030	D3W009KNJWS7	VBY315H06N
21KAKS06MPN8	P1D-Q040AS-0030	D3W009KNKW	VBY315K06N
21KAKS06MPNS	P1D-Q040AS-0045	D3W009KNTW	VBY315K10N
21KAKS06MPNS_02	P1D-Q040AS-0045	D3W010CNJW	VBY315L06N
21KAKS06MPNS_04	P1D-Q040AS-0060	D3W010ENJW	VBY315L10N
21KAKS06MPNS_13	P1D-Q040AS-0060	D3W010KNJW	VBY315L10V
21KAKS06MPNS_14	P1D-Q040AS-0080	D3W011CNJW	VBZ 10-1/4-SS
21KAKS06MPX	P1D-Q040AS-0080	D3W011CNJWS4	VBZ 12-1/2-SS
21KAKS06MPXS_01	P1D-Q040AS-0125	D3W011CNKW	VBZ 12-3/8-SS
21KAKS06MPXS_03	P1D-Q040AS-0125	D3W011CNTW	VBZ 16-1/2-SS
21KAKS06MVC	P1D-Q040AS-0150	D3W011CNYW	VBZ 6-1/4-SS
21KAKS06RVX	P1D-Q040AS-0150	D3W011ENJW	VBZ 6-1/8-SS
21KAKS06RVXS	P1D-Q040AS-0170	D3W012CNGW	VBZ 8-1/8-SS
21KAKS08MPN	P1D-Q040AS-0170	D3W012CNJWS4	V-C10DEC101E16/0U9900X425
21KAKS08MPNS	P1D-Q040MS-0020	D3W014CNGW42X859	V-C1DB101E32/0S9900
21KAKS08MPNS_03	P1D-Q040MS-0020	D3W014CNJW	V-C4DA01E50/4T9900X425
21KAKS08MPX	P1D-Q040MS-0030	D3W014CNJW42X859	VCL10F05A
21KAKS08MPXS_01	P1D-Q040MS-0030	D3W014CNTW	VCL12F05A
21KAKS08MPXS_03	P1D-Q040MS-0045	D3W014CNUW42X859	VCL12F65A
21KAKS08RVX	P1D-Q040MS-0045	D3W014CNYW	VCL16F05A
21KAKS46MPN	P1D-Q040MS-0060	D3W014ENJW	VCL20F65A
21KAKS46MPX	P1D-Q040MS-0060	D3W015CNGW	VCL6F05A
21KARP06MPN	P1D-Q040MS-0080	D3W015CNJW	VCL6F65A
21KARP08MPN	P1D-Q040MS-0080	D3W015CNJW42X859	VCL6P05A
21KASW13MPN	P1D-Q040MS-0125	D3W015CNTW	VCL8F05A
21KASW13MPX	P1D-Q040MS-0125	D3W015ENJW	VCL8F65A
21KATE04MPN	P1D-Q040MS-0150	D3W016CNJWX651	V-DAFA1002Z07E
21KATE04MPX	P1D-Q040MS-0150	D3W020BNDW	V-DAFA1002Z07K
21KATE06MPN	P1D-Q050AS-0035	D3W020BNGW	V-DDS4E25
21KATE06MPX	P1D-Q050AS-0035	D3W020BNGW42X859	VDHA06S
21KATE08MPX	P1D-Q050AS-0050	D3W020BNGWI5N	VDHA06SX
21KATE09MPN	P1D-Q050AS-0050	D3W020BNJDJ5	VDHA06ZS
21KATE09MPX	P1D-Q050AS-0070	D3W020BNJW	VDHA08S
21KATE10MPN	P1D-Q050AS-0070	D3W020BNJW42X859	VDHA08SX
21KATE10MPX	P1D-Q050AS-0080	D3W020BNJWI2N	VDHA08ZS
21KATF04EVX	P1D-Q050AS-0080	D3W020BNJWI5N	VDHA10S
21KATF04MPN	P1D-Q050AS-0100	D3W020BNJWS4	VDHA10SRED71
21KATF04MPN0	P1D-Q050AS-0100	D3W020BNJWT	VDHA10SSP103
21KATF04MPN3	P1D-Q050AS-0120	D3W020BNJWTI2N	VDHA10SX
21KATF04MPN6	P1D-Q050AS-0120	D3W020BNJWTI5N	VDHA10ZS
21KATF04MPN8	P1D-Q050AS-0150	D3W020BNJWTI5NXG145	VDHA12S
21KATF04MPNS	P1D-Q050AS-0150	D3W020BNJWTS4	VDHA12SDPR71
21KATF04MPX	P1D-Q050AS-0170	D3W020BNJWX651	VDHA12SX
21KATF04MPX0	P1D-Q050AS-0170	D3W020BNKW	VDHA12ZS
21KATF04MPX3	P1D-Q050AS-0180	D3W020BNSWX610	VDHA14S

21KATF04MPX6	P1D-Q050AS-0180	D3W020BNTW	VDHA14SX
21KATF04MPX8	P1D-Q050MS-0035	D3W020BNUW	VDHA14ZS
21KATF04MPXS_01	P1D-Q050MS-0035	D3W020BNUW42X859	VDHA16S
21KATF04MVN	P1D-Q050MS-0050	D3W020BNUWI5N	VDHA16SDPR71
21KATF04MVX	P1D-Q050MS-0050	D3W020BNYW	VDHA16SX
21KATF04RVX	P1D-Q050MS-0070	D3W020BNYWX651	VDHA16ZS
21KATF05MPN	P1D-Q050MS-0070	D3W020BVGW	VDHA18L
21KATF05MPX	P1D-Q050MS-0080	D3W020BVJW	VDHA20S
21KATF05MPXS	P1D-Q050MS-0080	D3W020BVJWS7	VDHA20SX
21KATF05MPXS_02	P1D-Q050MS-0100	D3W020BVTW	VDHA20ZS
21KATF06EEX	P1D-Q050MS-0100	D3W020DNGW	VDHA25S
21KATF06EVX	P1D-Q050MS-0120	D3W020DNGW42X859	VDHA25SDPR71
21KATF06MED	P1D-Q050MS-0120	D3W020DNJW	VDHA25SX
21KATF06MEN	P1D-Q050MS-0150	D3W020DNJW42X859	VDHA25ZS
21KATF06MEX	P1D-Q050MS-0150	D3W020DNKW	VDHA30S
21KATF06MEX8	P1D-Q050MS-0170	D3W020DNTW	VDHA30SX
21KATF06MPC	P1D-Q050MS-0170	D3W020DNYW	VDHA30ZS
21KATF06MPN	P1D-Q050MS-0180	D3W020DVGW	VDHA38S
21KATF06MPN0	P1D-Q050MS-0180	D3W020DVJW	VDHA38SX
21KATF06MPN3	P1D-Q063MS-0135	D3W020DVTW	VDHA38ZS
21KATF06MPN6	P1D-Q063MS-0135	D3W020HNDW	VDHB06S
21KATF06MPN8	P1D-Q100AS-0060	D3W020HNGW	VDHB06SX
21KATF06MPNS	P1D-Q100AS-0060	D3W020HNGW42X859	VDHB06ZS
21KATF06MPNS_05	P1D-Q100AS-0080	D3W020HNJW	VDHB08S
21KATF06MPNS_09	P1D-Q100AS-0080	D3W020HNJW42X859	VDHB08SX
21KATF06MPNS_14	P1D-Q100AS-0095	D3W020HNJW42XG066	VDHB08ZS
21KATF06MPX	P1D-Q100AS-0095	D3W020HNJWI1N	VDHB10S
21KATF06MPX0	P1D-Q100AS-0100	D3W020HNJWI4N	VDHB10SX
21KATF06MPX3	P1D-Q100AS-0100	D3W020HNJWS4	VDHB10ZS
21KATF06MPX6	P1D-Q100AS-0110	D3W020HNJWTI4N	VDHB12S
21KATF06MPX8	P1D-Q100AS-0110	D3W020HNKW	VDHB12S31B71X
21KATF06MPXS	P1D-Q100AS-0130	D3W020HNTW	VDHB12SX
21KATF06MPXS_02	P1D-Q100AS-0130	D3W020HNUW42X859	VDHB12ZS
21KATF06MPXS_06	P1D-Q100AS-0140	D3W020HNYW	VDHB14S
21KATF06MPXS_07	P1D-Q100AS-0140	D3W020HVJW	VDHB14SX
21KATF06MPXS_08	P1D-Q100AS-0160	D3W020HVJW42X859	VDHB16S
21KATF06MPXS_99	P1D-Q100AS-0160	D3W020HVJW4D	VDHB16SX
21KATF06MVN	P1D-Q100AS-0170	D3W021CNGW	VDHB16ZS
21KATF06MVN0	P1D-Q100AS-0170	D3W021CNJW	VDHB20S
21KATF06MVN3	P1D-Q100AS-0180	D3W021CNJW42X859	VDHB20SSTOSS71
21KATF06MVN6S_01	P1D-Q100AS-0180	D3W021CNJWS4	VDHB20SSTOSSSA1
21KATF06MVX	P1D-Q100AS-0200	D3W021CNKW	VDHB20SX
21KATF06MVX6	P1D-Q100AS-0200	D3W021KNGW	VDHB20ZS
21KATF06MVXS	P1D-Q100AS-0230	D3W021KNJW	VDHB25S
21KATF06MVXS_01	P1D-Q100AS-0230	D3W021KNJWTI4N	VDHB25SSTOSS71
21KATF06REX	P1D-Q100MS-0015	D3W022CNJW	VDHB25SX
21KATF06RVX	P1D-Q100MS-0015	D3W022CVJW	V-DSBA1002P07B
21KATF06SPN	P1D-Q100MS-0060	D3W022ENJW	V-DSDA10061P07G
21KATF08EEX	P1D-Q100MS-0060	D3W026BNGW	V-DSDA10061P07K
21KATF08EVX	P1D-Q100MS-0080	D3W026BNJW	V-DSDAV2061P04E
21KATF08MED	P1D-Q100MS-0080	D3W026BNJW42X859	V-DUDB202E15K
21KATF08MEX8	P1D-Q100MS-0095	D3W026BNJW42X868	V-DWEE527P40KLAF
21KATF08MPN	P1D-Q100MS-0095	D3W026BNJW42XG039	V-DWKC520P20

21KATF08MPN0	P1D-Q100MS-0100	D3W026BNJWI5N	V-DWLC522P20K
21KATF08MPN3	P1D-Q100MS-0100	D3W026BNJWS7	V-DWLC5261P20E
21KATF08MPN6	P1D-Q100MS-0110	D3W026BNJWTI3N	VE03-ES6C016D2
21KATF08MPN8	P1D-Q100MS-0110	D3W026BNJWTI5N	VE03-ES6C016D2
21KATF08MPNS	P1D-Q100MS-0130	D3W026BNKW	VE03-ESC012B2
21KATF08MPX	P1D-Q100MS-0130	D3W026BNKW42X868	VE03-ESC012B2
21KATF08MPX0	P1D-Q100MS-0140	D3W026BNTW	VE03-ESC012C2
21KATF08MPX3	P1D-Q100MS-0140	D3W026BVJW	VE03-ESC012C2
21KATF08MPX6	P1D-Q100MS-0160	D3W026HNJW	VE03-ESC014C2
21KATF08MPX8	P1D-Q100MS-0160	D3W026HNJWI1N	VE03-ESC014C2
21KATF08MPXS_01	P1D-Q100MS-0200	D3W026HNJWI4N	VE03-ESC014E2
21KATF08MPXS_02	P1D-Q100MS-0200	D3W026HNTW	VE03-ESC014E2
21KATF08MPXS_99	P1D-Q100MS-0230	D3W030BNGW	VE03-ESC014H2
21KATF08MVN	P1D-Q100MS-0230	D3W030BNGWI2N	VE03-ESC014H2
21KATF08MVX	P1D-Q125MS-0050	D3W030BNGWS4	VE03-ESC014K2
21KATF08MVX6	P1D-Q125MS-0050	D3W030BNJW	VE03-ESC014K2
21KATF08REX	P1D-Q125MS-0110	D3W030BNJW42X868	VE03-ESD012C2
21KATF08RVX	P1D-Q125MS-0110	D3W030BNJW42XG039	VE03-ESD012C2
21KATF09EVX	P1DRL032MC-0200	D3W030BNJW4D42XG039	VE03-ESP002C2
21KATF09MEN	P1DRL032MC-0200	D3W030BNJWI2N	VE03-ESP002C2
21KATF09MEX	P1DRL040MC-0090	D3W030BNJWI5N	VE13-ESC042C2
21KATF09MPC	P1DRL040MC-0090	D3W030BNJWS4	VE13-ESC042C2
21KATF09MPN	P1DRL040MC-0100	D3W030BNJWS7	VE13-ESC044C2
21KATF09MPNS	P1DRL040MC-0100	D3W030BNJWT	VE13-ESC044C2
21KATF09MPNS_03	P1DRL040MC-0160	D3W030BNKW	VE13-ESC044E2
21KATF09MPX	P1DRL040MC-0160	D3W030BNKWS442X868	VE13-ESC044E2
21KATF09MPX0	P1DRL040MC-0400	D3W030BNTW	VE13-ESC044H2
21KATF09MPX3	P1DRL040MC-0400	D3W030BNUWI2N	VE13-ESC044H2
21KATF09MPX6	P1DRL040MC-0500	D3W030BNYW	VE13-ESC044K2
21KATF09MPX8	P1DRL040MC-0500	D3W030BVJW	VE13-ESC044K2
21KATF09MPXS_02	P1DRL050MC-0150	D3W030BVJWI2N	VE13-ESP012C2
21KATF09MVN	P1DRL050MC-0150	D3W030DNJW	VE13-ESP012C2
21KATF09RVX	P1DRL050MC-0250	D3W030DNKW	VE13-H-S-5
21KATF09SPN	P1DRL050MC-0250	D3W030DNYW	VE13-H-S-5
21KATF10EVX	P1DRL063MC-0025	D3W030HNJW	VE13-I-S-5
21KATF10MED	P1DRL063MC-0025	D3W030HNJWI1N	VE13-I-S-5
21KATF10MEX	P1DRL063MC-0040	D3W030HNJWS4	VE13-UW-S-5
21KATF10MPC	P1DRL063MC-0040	D3W030HNJWS7	VE13-UW-S-5
21KATF10MPN	P1DRL063MC-0050	D3W030HNJWT	VE13-W-S-5
21KATF10MPN0	P1DRL063MC-0050	D3W030HNJWTI4N	VE13-W-S-5
21KATF10MPN3	P1DRL063MC-0080	D3W030HNKW	VE15-I-S-5
21KATF10MPN6	P1DRL063MC-0080	D3W030HNTW	VE15-I-S-5
21KATF10MPN8	P1DRL063MC-0100	D3W030HNYW	VE15-UW-S-5
21KATF10MPNS	P1DRL063MC-0100	D3W031CNJW	VE15-UW-S-5
21KATF10MPNS_04	P1DRL063MC-0125	D3W031ENJW	VE15-W-S-5
21KATF10MPX	P1DRL063MC-0125	D3W034CNGW	VE15-W-S-5
21KATF10MPX0	P1DRL063MC-0130	D3W034CNJW	VE22-A-S-5
21KATF10MPX3	P1DRL063MC-0130	D3W034CNTW	VE22-A-S-5
21KATF10MPX6	P1DRL063MC-0160	D3W034CVJW	VE22-A-S-5-B00
21KATF10MPX8	P1DRL063MC-0160	D3W034KNJW	VE22-A-S-5-B00
21KATF10MPXS_01	P1DRL063MC-0200	D3W035CNJW	VE42-A-S-5
21KATF10MVN	P1DRL063MC-0200	D3W035CNJW42XG066	VE42-A-S-5
21KATF10RVX	P1DRL063MC-0320	D3W035ENJW	VE42-A-S-5-B00

21KATP06MPN	P1DRL063MC-0320	D3W042EVJWS4	VE42-A-S-5-B00
21KATP06MPX	P1DRL063MC-0500	D3W069BNJWTI5N	VE82-A-S-5
21KATP06MPXS_01	P1DRL063MC-0500	D3W069HVJWTI4N	VE82-A-S-5
21KATP06RVX	P1DRL063MC-0700	D3W071BNJW	VE82-A-S-5-B00
21KATR06MPN	P1DRL063MC-0700	D3W072BNKW	VE82-A-S-5-B00
21KATR06MPNS_01	P1DRL080MC-0080	D3W072HNJW	VE83-A-S-5
21KATS04MPN	P1DRL080MC-0080	D3W081CNJW	VE83-A-S-5
21KATS04MPN0	P1DRL100MC-0100	D3W081CNJWS4	VEAC12-12F
21KATS04MPN3	P1DRL100MC-0100	D3W081CNJWS7	VEAC12-12FV
21KATS04MPN6	P1DRL100MC-0145	D3W081CNJWXG196	VEAC4-4F
21KATS04MPN8	P1DRL100MC-0145	D3W081FNJWS4	VEAC4-4MV
21KATS04MPNS	P1DRL100MC-0180	D3W082CNJW	VEAC6-6F
21KATS04MPX	P1DRL100MC-0180	D3W082CNJW4D	VEAN12-12FV
21KATS04MPX0	P1DRL100MC-0200	D3W082CNJWS4	VEAN4-4F
21KATS04MPX3	P1DRL100MC-0200	D3W101BNJWS4	VEAN6-6F
21KATS04MPX6	P1DRL100MC-0250	D3W101DNJWS7	VEAN8-8FV
21KATS04MPX8	P1DRL100MC-0250	D3W101HNGWS7	VEC16-SPK
21KATS04MPXS	P1DRL100MC-0320	D3W101HNJW	VED13/S50058
21KATS04MPXS_01	P1DRL100MC-0320	D3W101HVJW4D	VED13/S50058
21KATS04MPXS_03	P1DRL125MC-0100	D3W102CNJWS4	VED13-WG-S-5
21KATS05MPN	P1DRL125MC-0100	D3W102ENJWS4	VED13-WG-S-5
21KATS05MPX	P1DRL125MC-0250	D3W102KNJW	VED13-W-S-5
21KATS05MPX0	P1DRL125MC-0250	D3W205CNJW	VED13-W-S-5
21KATS05MPX3	P1DRL125MC-0400	D3W207KNJWT	VEE06LMCF
21KATS05MPX6	P1DRL125MC-0400	D3W207KNJWTI5N	VEE06LRCF
21KATS05MPX8	P1D-S032/S50981	D41FBA31FC1NKW0	VEE06LROMDCF
21KATS05MPXS	P1D-S032/S50981	D41FBA32FC4NJW0	VEE06SROMDCF
21KATS05RVX	P1D-S032AS-0025	D41FBB00FC4NF08X821	VEE06ZLRCF
21KATS06MPC0	P1D-S032AS-0025	D41FBB00FC4NKW0X840	VEE08L7/16UNFCF
21KATS06MPC6	P1D-S032AS-0050	D41FBB31FC1NF00	VEE08LMCF
21KATS06MPC8	P1D-S032AS-0050	D41FBB31FC1NJW0	VEE08LMORCF
21KATS06MPN	P1D-S032AS-0080	D41FBB31FC1NKW0	VEE08LRBOMD71
21KATS06MPN0	P1D-S032AS-0080	D41FBB31FC1VF00	VEE08LRCF
21KATS06MPN3	P1D-S032AS-0160	D41FBB31FC2NF00	VEE08LROMDCF
21KATS06MPN6	P1D-S032AS-0160	D41FBB31FC2VKW0	VEE08SMORCF
21KATS06MPN8	P1D-S032AS-0440	D41FBB31FC4NF00	VEE08SROMDCF
21KATS06MPNS	P1D-S032AS-0440	D41FBB31FC4NG00	VEE08ZLMORCF
21KATS06MPNS_01	P1D-S032DS-0250	D41FBB32FC1NF00	VEE08ZLRCF
21KATS06MPNS_02	P1D-S032DS-0250	D41FBB32FC1NKW0	VEE10L9/16UNFOMDCF
21KATS06MPX	P1D-S032FC-0025	D41FBB32FC1VF00	VEE10LMOMDCF
21KATS06MPX0	P1D-S032FC-0025	D41FBB32FC2NF00	VEE10LMOROMDCF
21KATS06MPX3	P1D-S032FF-0040N7096	D41FBB32FC2NKW0	VEE10LRBOMD71
21KATS06MPX6	P1D-S032FF-0040N7096	D41FBB32FC4NKW0	VEE10LRCF
21KATS06MPX8	P1D-S032FS-0025	D41FBB32FC4NS00	VEE10LRDPR71CF
21KATS06MPXS	P1D-S032FS-0025	D41FBB32FC4VKW0	VEE10LROMDCF
21KATS06MPXS_01	P1D-S032FS-0040	D41FBB32FC5VJW0	VEE10SROMDCF
21KATS06MPXS_02	P1D-S032FS-0040	D41FBE01BC1NJW0	VEE10ZLRCF
21KATS06MPXS_05	P1D-S032FS-0050	D41FBE01BC4NJW0	VEE10ZSMCF
21KATS06MPXS_08	P1D-S032FS-0050	D41FBE01BC4NKW0	VEE12LMOMDCF
21KATS06MPXS_09	P1D-S032FS-0080	D41FBE01BK4NKW0	VEE12LMORCF
21KATS06MVX	P1D-S032FS-0080	D41FBE01CC1NJW0	VEE12LMVITOMDCF
21KATS06MVXS	P1D-S032MC-0025	D41FBE01CC1NJW8X726	VEE12LRBOMD71
21KATS06RVX	P1D-S032MC-0025	D41FBE01CC1NKW0	VEE12LRCF

21KATS08MPN	P1D-S032MC-0030	D41FBE01CC4NF00	VEE12LROMDCF
21KATS08MPX	P1D-S032MC-0030	D41FBE01CC4NJE0EE	VEE12S3/4UNFCF
21KATS08MPX0	P1D-S032MC-0060	D41FBE01CC4NJW0	VEE12SRCF
21KATS08MPX3	P1D-S032MC-0060	D41FBE01FC1NF00	VEE12SROMDCF
21KATS08MPX6	P1D-S032MC-0080	D41FBE01FC1NJW8X726	VEE12ZLRCF
21KATS08MPX8	P1D-S032MC-0080	D41FBE01FC1NKW0	VEE12ZSRCF
21KATS08MPXS	P1D-S032MC-0125	D41FBE01FC1NS00	VEE15L7/8UNFCF
21KATS08MPXS_02	P1D-S032MC-0125	D41FBE01FC1VF00	VEE15LMOMDCF
21KATS08MPXS_05	P1D-S032MC-0160	D41FBE01FC2NF00	VEE15LMOROMDCF
21KATS08MPXS_06	P1D-S032MC-0160	D41FBE01FC2NF08	VEE15LRCF
21KATS08MPXS_07	P1D-S032MC-0200	D41FBE01FC2NJW0	VEE15LROMDCF
21KATS08MPXS_09	P1D-S032MC-0200	D41FBE01FC2NKW0	VEE15ZLRCF
21KATS08MPXS_10	P1D-S032MC-0220	D41FBE01FC2NKW8	VEE16S7/8UNFOMDCF
21KATS08MVX	P1D-S032MC-0220	D41FBE01FC2NS00	VEE16SMOROMDCF
21KATS08MVXS	P1D-S032MC-0250	D41FBE01FC4NF00	VEE16SRCF
21KATS08RVX	P1D-S032MC-0250	D41FBE01FC4NJW0	VEE16SROMDCF
21KATS09MPN	P1D-S032MC-0350	D41FBE01FC4NKW0	VEE16ZSM71
21KATS09MPX	P1D-S032MC-0350	D41FBE01FC4NM00	VEE16ZSRCF
21KATS09MPXS_01	P1D-S032MC-0450	D41FBE01FC4NS00	VEE18L11/16UNOMDCF
21KATS10MPN	P1D-S032MC-0450	D41FBE01FC5NG00	VEE18LMCF
21KATS10MPX	P1D-S032MC-0600	D41FBE01FC5NJW0	VEE18LMOMDCF
21KATS10MPXS	P1D-S032MC-0600	D41FBE02BC2NF00	VEE18LRCF
21KATS10MPXS_01	P1D-S032MF-0100	D41FBE02BC2NJW0	VEE18LROMDCF
21KATS10MPXS_02	P1D-S032MF-0100	D41FBE02BC4NJW0	VEE18ZLRCF
21KATS10MPXS_03	P1D-S032MR-0125NG000	D41FBE02BC4NS00	VEE20SMOMDCF
21KATS10MVX	P1D-S032MR-0125NG000	D41FBE02CC1NF00	VEE20SMOROMDCF
21KATS10MVXS	P1D-S032MS-0010	D41FBE02CC2NKW0	VEE20SROMDCF
21KBAD10MPN	P1D-S032MS-0010	D41FBE02CC4NJE0EE	VEE22LRBOMD71
21KBAD10MPX	P1D-S032MS-0015	D41FBE02CC4NJW0	VEE22LROMDCF
21KBAD10MPXS	P1D-S032MS-0015	D41FBE02CC5NKW0	VEE22ZLRCF
21KBAD10MVN	P1D-S032MS-0016	D41FBE02FC1NF00	VEE25SROMDCF
21KBAD12MPN	P1D-S032MS-0016	D41FBE02FC1NJW0	VEE25ZSRCF
21KBAD12MPX	P1D-S032MS-0020	D41FBE02FC1NKW0	VEE28LMOROMDCF
21KBAD12MVN	P1D-S032MS-0020	D41FBE02FC2NKW0	VEE28LRBOMD71
21KBAD12MVX	P1D-S032MS-0025NNN6N	D41FBE02FC4NF00	VEE28LROMDCF
21KBAD14MPN	P1D-S032MS-0025NNN6N	D41FBE02FC4NG00	VEE28ZLRCF
21KBAD14MPX	P1D-S032MS-0030	D41FBE02FC4NJE0EE	VEE30SRCF
21KBAD14MVN	P1D-S032MS-0030	D41FBE02FC4NJW0	VEE30SROMDCF
21KBAM14RVX	P1D-S032MS-0032	D41FBE02FC4NKW0	VEE35LRCF
21KBAN10MEN	P1D-S032MS-0032	D41FBE02FC4NS00	VEE35LROMDCF
21KBAN10MPN	P1D-S032MS-0035	D41FBE02FC4VKW0	VEE35ZLRCF
21KBAN10MPX	P1D-S032MS-0035	D41FBE02FC5NJW0	VEE38SRCF
21KBAN10MVN	P1D-S032MS-0045	D41FBE02FC5NKW0	VEE38SROMDCF
21KBAN10RVX	P1D-S032MS-0045	D41FBE02FC5VKW0	VEE42LROMDCF
21KBAN13MPN	P1D-S032MS-0050	D41FBE03FC4NKW0	VEE42ZLRCF
21KBAN13MPX	P1D-S032MS-0050	D41FBE04FC4NF08	VEM9-14-8.2
21KBAN13RVX	P1D-S032MS-0050NG000	D41FBE04FK4NF08	VEM9-19-10.2-SP01X
21KBAN17MPX	P1D-S032MS-0050NG000	D41FBE91FE2NKW0XG294	VEM9-22-21
21KBAW10DPX	P1D-S032MS-0050NNKNN	D41FBR31FC4NJW0	VEM9-22-21-SP01
21KBAW10DPXG	P1D-S032MS-0050NNKNN	D41FBZ31FC2NF0LXG262	VENT MASTER-EDR-06
21KBAW10DPXGB	P1D-S032MS-0055	D41FBZ32FC4NJWL	VENT-MASTER-NPE
21KBAW10DPXGG	P1D-S032MS-0055	D41FBZ32FC4NKWL	VERG-14
21KBAW10DPXGR	P1D-S032MS-0057	D41FEB32FC4NS00XG183	VERG-19

21KBAW10DPXGY	P1D-S032MS-0057	D41FEE01FC2NB00	VEX20SBXMXX
21KBAW10EEX	P1D-S032MS-0060	D41FEE01FC2NK00	VEX21KBXRXX
21KBAW10EVX	P1D-S032MS-0060	D41FEE01FC4NE70	VEX87KBXMXX
21KBAW10FVX	P1D-S032MS-0065	D41FEE01FC4NS00	VEX93SLXMXX
21KBAW10FVXG	P1D-S032MS-0065	D41FEE02FC4NS00	VEXAAXXXMXX
21KBAW10FVXGB	P1D-S032MS-0070	D41FEE52FB4NS00XG183	VF03-ESC012C2
21KBAW10FVXGG	P1D-S032MS-0070	D41FER31FC4NB70	VF03-ESC012C2
21KBAW10FVXGR	P1D-S032MS-0075	D41FER32FC4NK00	VF03-ESC014C2
21KBAW10FVXGY	P1D-S032MS-0075	D41FEZ31FC4NS0L	VF03-ESC014C2
21KBAW10MED	P1D-S032MS-0080	D41FHA31C1NB00	VF03-ESC014E2
21KBAW10MEN	P1D-S032MS-0080	D41FHA31C2NB00	VF03-ESC014E2
21KBAW10MPN	P1D-S032MS-0080NTNNN	D41FHA31F1NB00	VF03-ESC014H2
21KBAW10MPN0	P1D-S032MS-0080NTNNN	D41FHA32C1NB00	VF03-ESC014H2
21KBAW10MPN3	P1D-S032MS-0090	D41FHA32C2NE00	VF03-ESC014K2
21KBAW10MPN6	P1D-S032MS-0090	D41FHA32F2NB00	VF03-ESC014K2
21KBAW10MPN8	P1D-S032MS-0100	D41FHA61B4NB00	VF03-ESP002C2
21KBAW10MPNS	P1D-S032MS-0100	D41FHA61C2NB00	VF03-ESP002C2
21KBAW10MPNS_01	P1D-S032MS-0100NNN6N	D41FHA61F1NB00	VF13-SEC042C2
21KBAW10MPNS_02	P1D-S032MS-0100NNN6N	D41FHA61F2NB00	VF13-SEC042C2
21KBAW10MPX	P1D-S032MS-0110	D41FHA61F4VB00	VF13-SEC044C2
21KBAW10MPX0	P1D-S032MS-0110	D41FHA63E2NB00	VF13-SEC044C2
21KBAW10MPX3	P1D-S032MS-0115	D41FHA88F2NB08X726	VF13-SEC044H2
21KBAW10MPX6	P1D-S032MS-0115	D41FHB11F1NB00	VF13-SEC044H2
21KBAW10MPX8	P1D-S032MS-0120	D41FHB11F1VB00	VF13-SEC044K2
21KBAW10MPXS	P1D-S032MS-0120	D41FHB11F1VE00	VF13-SEC044K2
21KBAW10MPXS_04	P1D-S032MS-0125NNN6N	D41FHB11F2NB08	VF15/132678
21KBAW10MPXS_05	P1D-S032MS-0125NNN6N	D41FHB11F4NB00	VF15/132678
21KBAW10MPXS_06	P1D-S032MS-0140	D41FHB12F1NB00	VF15/S50112
21KBAW10MPXS_09	P1D-S032MS-0140	D41FHB12F4NB00	VF15/S50112
21KBAW10MVN	P1D-S032MS-0150	D41FHB13F4NB00	VF15/S50838
21KBAW10MVN6	P1D-S032MS-0150	D41FHB15F4NB00	VF15/S50838
21KBAW10MVN8	P1D-S032MS-0160	D41FHB31B2NB00	VF15/S51042
21KBAW10MVX	P1D-S032MS-0160	D41FHB31B4NB00	VF15/S51042
21KBAW10REX	P1D-S032MS-0160NNN6N	D41FHB31B4NS00	VF15/S51060A
21KBAW10RKX	P1D-S032MS-0160NNN6N	D41FHB31B5NB00	VF15/S51060A
21KBAW10RVX	P1D-S032MS-0180	D41FHB31C1NB00	VF15/S51061A
21KBAW10RVXS	P1D-S032MS-0180	D41FHB31C1NE00	VF15/S51061A
21KBAW13DPX	P1D-S032MS-0190	D41FHB31C2NB00	VF-2E
21KBAW13DPXG	P1D-S032MS-0190	D41FHB31C2NE00	VF-2E
21KBAW13DPXGB	P1D-S032MS-0200	D41FHB31C2NE00X807	VF-2G
21KBAW13DPXGG	P1D-S032MS-0200	D41FHB31C4NB00	VF-2G
21KBAW13DPXGR	P1D-S032MS-0200HNCN4	D41FHB31C4NE00	VF-2K
21KBAW13DPXGY	P1D-S032MS-0200HNCN4	D41FHB31E1NB00	VF-2K
21KBAW13DVXG	P1D-S032MS-0220	D41FHB31E1NB08	VF-3E
21KBAW13EEX	P1D-S032MS-0220	D41FHB31E1NE00	VF-3E
21KBAW13EKX	P1D-S032MS-0225	D41FHB31E2NB08	VF-3G
21KBAW13EVX	P1D-S032MS-0225	D41FHB31E2NS00	VF-3G
21KBAW13EVXS	P1D-S032MS-0230	D41FHB31E4NB00	VF-3K
21KBAW13FEX	P1D-S032MS-0230	D41FHB31E4NB08	VF-3K
21KBAW13FVX	P1D-S032MS-0235	D41FHB31E4NE00	VF42/S90009
21KBAW13FVXG	P1D-S032MS-0235	D41FHB31F1NB00	VF42/S90009
21KBAW13FVXGB	P1D-S032MS-0250	D41FHB31F1NE00	VF45-6/S90010
21KBAW13FVXGG	P1D-S032MS-0250	D41FHB31F2NB00	VF45-6/S90010

21KBAW13FVXGR	P1D-S032MS-0250NG000	D41FHB31F2NB08	VF-5E
21KBAW13FVXGY	P1D-S032MS-0250NG000	D41FHB31F2NE00	VF-5E
21KBAW13MED	P1D-S032MS-0270	D41FHB31F2NS00	VF-5G
21KBAW13MEX	P1D-S032MS-0270	D41FHB31F4NB00	VF-5G
21KBAW13MEXS_01	P1D-S032MS-0275	D41FHB31F4NE00	VF-6E
21KBAW13MPD	P1D-S032MS-0275	D41FHB31F4VB00	VF-6E
21KBAW13MPN	P1D-S032MS-0280	D41FHB32B1NB00	VF-6G
21KBAW13MPN0	P1D-S032MS-0280	D41FHB32B1NE00	VF-6G
21KBAW13MPN6	P1D-S032MS-0300	D41FHB32B1NS00	VFL-1010
21KBAW13MPN8	P1D-S032MS-0300	D41FHB32B4NB00	VFL-1010
21KBAW13MPNS	P1D-S032MS-0320	D41FHB32B4NS00	VFL-44
21KBAW13MPNS_01	P1D-S032MS-0320	D41FHB32C1NB00	VFL-44
21KBAW13MPNS_03	P1D-S032MS-0340	D41FHB32C1NS00	VFL-44E
21KBAW13MPNS_04	P1D-S032MS-0340	D41FHB32C2NB00	VFL-44E
21KBAW13MPX	P1D-S032MS-0350	D41FHB32C2NE00	VFL-46H
21KBAW13MPX0	P1D-S032MS-0350	D41FHB32C4NB00	VFL-46H
21KBAW13MPX3	P1D-S032MS-0360	D41FHB32C4NS00	VFL-66
21KBAW13MPX6	P1D-S032MS-0360	D41FHB32E1NB00	VFL-66
21KBAW13MPX8	P1D-S032MS-0380	D41FHB32E1VB00	VFL-81H
21KBAW13MPXS_02	P1D-S032MS-0380	D41FHB32E2NB00	VFL-81H
21KBAW13MPXS_10	P1D-S032MS-0400	D41FHB32E2NE00	VFL-88
21KBAW13MVN	P1D-S032MS-0400	D41FHB32F1NB00	VFL-88
21KBAW13MVNS_02	P1D-S032MS-0430	D41FHB32F1NB08	VFL-88E
21KBAW13MVX	P1D-S032MS-0430	D41FHB32F2NB00	VFL-88E
21KBAW13REX	P1D-S032MS-0450	D41FHB32F2NE00	VFL-M5
21KBAW13RKX	P1D-S032MS-0450	D41FHB32F4NB00	VFL-M5
21KBAW13RVX	P1D-S032MS-0460	D41FHB32F4NE08	VFQ43-AS
21KBAW13RVXS	P1D-S032MS-0460	D41FHB32F5NB00	VFQ43-AS
21KBAW17EKX	P1D-S032MS-0485	D41FHB34F1NB00	VFQ43-ERS2CQ
21KBAW17EVX	P1D-S032MS-0485	D41FHB34F2NB00	VFQ43-ERS2CQ
21KBAW17MED	P1D-S032MS-0490	D41FHB34F4NB00	VG13-ESC162C2
21KBAW17MEX	P1D-S032MS-0490	D41FHB61B1NB00	VG13-ESC162C2
21KBAW17MPN	P1D-S032MS-0500	D41FHB61B2NB00	VG13-ESC164E2
21KBAW17MPNS	P1D-S032MS-0500	D41FHB61B4NB00	VG13-ESC164E2
21KBAW17MPX	P1D-S032MS-0550	D41FHB61B4NB20	VG25-AA
21KBAW17MPXS_01	P1D-S032MS-0550	D41FHB61B4VB00	VG25-AA
21KBAW17MPXS_03	P1D-S032MS-0560	D41FHB61C1NB00	VG25-AC
21KBAW17MPXS_04	P1D-S032MS-0560	D41FHB61C2NB00	VG25-AC
21KBAW17MVN	P1D-S032MS-0575	D41FHB61C2NE00	VG25-AERC
21KBAW17MVX	P1D-S032MS-0575	D41FHB61C4NB00	VG25-AERC
21KBAW17RKX	P1D-S032MS-0580	D41FHB61C5NB00	VG25-AERER
21KBAW17RVX	P1D-S032MS-0580	D41FHB61E2NB00	VG25-AERER
21KBFR06FVX	P1D-S032MS-0600	D41FHB61E4NB00	VG25-AERS
21KBFR08FVX	P1D-S032MS-0600	D41FHB61E4NS00	VG25-AERS
21KBIM12MPN	P1D-S032MS-0620	D41FHB61F1NB00	VG25-AS
21KBIM12MPX	P1D-S032MS-0620	D41FHB61F1VB00	VG25-AS
21KBIM12MVX	P1D-S032MS-0650	D41FHB61F2NB00	VG25-AS/S32749
21KBIM12RVX	P1D-S032MS-0650	D41FHB61F2NE00	VG25-AS/S32749
21KBIM14MPNS_01	P1D-S032MS-0680	D41FHB61F2VB00	VG25-AXERC
21KBIM14MPX	P1D-S032MS-0680	D41FHB61F4NB00	VG25-AXERC
21KBIM14MVX	P1D-S032MS-0700	D41FHB61F4VB00	VG25-EAC
21KBIN10MPN	P1D-S032MS-0700	D41FHB61F5NB00	VG25-EAC
21KBIN10MPX	P1D-S032MS-0740	D41FHB63B1NB00	VG25-EAS

21KBIN13MPX	P1D-S032MS-0740	D41FHB63B4NB20	VG25-EAS
21KBIN13RVX	P1D-S032MS-0750	D41FHB63C4NB00	VG25-ERC-BL49
21KBIN17RKXS	P1D-S032MS-0750	D41FHB63C4NB20	VG25-ERC-BL49
21KBIW10DPX	P1D-S032MS-0775	D41FHB63E1NB00	VG25-ERC-BN
21KBIW10DPXG	P1D-S032MS-0775	D41FHB63E2NB00	VG25-ERC-BN
21KBIW10DPXGB	P1D-S032MS-0800	D41FHB63E4NB20	VG25-ERC-DB49
21KBIW10DPXGG	P1D-S032MS-0800	D41FHB63F4NB00	VG25-ERC-DB49
21KBIW10DPXGR	P1D-S032MS-0815	D41FHB63F5NB00	VG25-ERDR
21KBIW10DPXGY	P1D-S032MS-0815	D41FHB83F2NB00	VG25-ERDR
21KBIW10EVX	P1D-S032MS-0825	D41FHB83F4NB00	VG25-ERDR-DN
21KBIW10FVX	P1D-S032MS-0825	D41FHB83F5NB00	VG25-ERDR-DN
21KBIW10FVXG	P1D-S032MS-0860	D41FHE01B1NB00	VG25-ERER
21KBIW10MEN	P1D-S032MS-0860	D41FHE01B1NE00	VG25-ERER
21KBIW10MEN8	P1D-S032MS-0900	D41FHE01B1NS00	VG25-ERER-BL49
21KBIW10MEX	P1D-S032MS-0900	D41FHE01B2NB00	VG25-ERER-BL49
21KBIW10MPC	P1D-S032MS-0925	D41FHE01B2NB08X726	VG25-ERER-BN
21KBIW10MPN	P1D-S032MS-0925	D41FHE01B2NE00X807	VG25-ERER-BN
21KBIW10MPN6	P1D-S032MS-0950	D41FHE01B4NB00	VG25-ERER-DB49
21KBIW10MPN8	P1D-S032MS-0950	D41FHE01C1NB00	VG25-ERER-DB49
21KBIW10MPNS	P1D-S032MS-1000	D41FHE01C1NE00	VG25-ERS
21KBIW10MPNS_01	P1D-S032MS-1000	D41FHE01C1NE00X807	VG25-ERS
21KBIW10MPNS_03	P1D-S032MS-1050	D41FHE01C2NB00	VG25-ERS-BN
21KBIW10MPX	P1D-S032MS-1050	D41FHE01C2NE00X807	VG25-ERS-BN
21KBIW10MPX0	P1D-S032MS-1300	D41FHE01C2NS08	VG25-ERS-DB49
21KBIW10MPX3	P1D-S032MS-1300	D41FHE01C4NB00	VG25-ERS-DB49
21KBIW10MPX6	P1D-S032MS-1500	D41FHE01C4NE00	VG25-ERS-DN
21KBIW10MPX8	P1D-S032MS-1500	D41FHE01C4NS00	VG25-ERS-DN
21KBIW10MPXS	P1D-S032MS-1900	D41FHE01C4VB00	VG25-XAC
21KBIW10MVN	P1D-S032MS-1900	D41FHE01C5NB00	VG25-XAC
21KBIW10MVX	P1D-S032VS-0360	D41FHE01E1NB00	VG25-XEAC
21KBIW10REX	P1D-S032VS-0360	D41FHE01E1NB08	VG25-XEAC
21KBIW10RKX	P1D-S040AM-0300	D41FHE01E1NE00	VG25-XERC
21KBIW10RVX	P1D-S040AM-0300	D41FHE01E2NB00	VG25-XERC
21KBIW10RVXS	P1D-S040AM-0500	D41FHE01E2NB08	VG25-YAC
21KBIW13DPX	P1D-S040AM-0500	D41FHE01E2NE00X807	VG25-YAC
21KBIW13DPXG	P1D-S040AS-0020	D41FHE01E2VB00	VG25-YERC
21KBIW13DPXGB	P1D-S040AS-0020	D41FHE01E4NB00	VG25-YERC
21KBIW13DPXGG	P1D-S040AS-0050	D41FHE01E4NE00	VG25-YERC-DB49
21KBIW13DPXGR	P1D-S040AS-0050	D41FHE01E4NS00	VG25-YERC-DB49
21KBIW13DPXGY	P1D-S040AS-0100	D41FHE01E4VB00	VG35-AA
21KBIW13EEX	P1D-S040AS-0100	D41FHE01E5NB00	VG35-AA
21KBIW13EVX	P1D-S040AS-0125	D41FHE01E5NB08	VG35-AC
21KBIW13FEX	P1D-S040AS-0125	D41FHE01E5VB00	VG35-AC
21KBIW13FVX	P1D-S040AS-0200	D41FHE01F1NB00	VG35-AERC
21KBIW13FVXG	P1D-S040AS-0200	D41FHE01F1NB08	VG35-AERC
21KBIW13FVXGB	P1D-S040BS-0025	D41FHE01F1NE00	VG35-AERS
21KBIW13FVXGG	P1D-S040BS-0025	D41FHE01F1NS00	VG35-AERS
21KBIW13FVXGR	P1D-S040DS-0025	D41FHE01F1VB00	VG35-AS
21KBIW13FVXGY	P1D-S040DS-0025	D41FHE01F2NB00	VG35-AS
21KBIW13FVXS	P1D-S040DS-0250	D41FHE01F2NB08	VG35-EAC-DN
21KBIW13MEN	P1D-S040DS-0250	D41FHE01F2NS00	VG35-EAC-DN
21KBIW13MEX	P1D-S040FS-0025	D41FHE01F2VB00	VG35-EAS
21KBIW13MPD	P1D-S040FS-0025	D41FHE01F4NB00	VG35-EAS

21KBIW13MPN	P1D-S040FS-0050	D41FHE01F4NB08	VG35-ERC
21KBIW13MPNS	P1D-S040FS-0050	D41FHE01F4NE00	VG35-ERC
21KBIW13MPNS_01	P1D-S040FS-0080	D41FHE01F4NS00	VG35-ERDR
21KBIW13MPNS_02	P1D-S040FS-0080	D41FHE01F4VB00	VG35-ERDR
21KBIW13MPX	P1D-S040FS-0120	D41FHE01F4VE00	VG35-ERER
21KBIW13MPX6	P1D-S040FS-0120	D41FHE01F5NB00	VG35-ERER
21KBIW13MPX8	P1D-S040FS-0360	D41FHE02B1NB00	VG35-ERER-BL49
21KBIW13MPXS_01	P1D-S040FS-0360	D41FHE02B1NE00	VG35-ERER-BL49
21KBIW13MPXS_02	P1D-S040MC-0030	D41FHE02B2NB00	VG35-ERER-DN
21KBIW13MPXS_06	P1D-S040MC-0030	D41FHE02B4NB00	VG35-ERER-DN
21KBIW13MVN	P1D-S040MC-0040	D41FHE02B4NB08	VG35-ERS
21KBIW13MVNS	P1D-S040MC-0040	D41FHE02C1NB00	VG35-ERS
21KBIW13MVNS_01	P1D-S040MC-0050	D41FHE02C1NE00	VG35-ERS-BL49
21KBIW13MVX	P1D-S040MC-0050	D41FHE02C1NE00X807	VG35-ERS-BL49
21KBIW13REX	P1D-S040MC-0060	D41FHE02C2NB00	VG35-XAC
21KBIW13RKX	P1D-S040MC-0060	D41FHE02C2NE00	VG35-XAC
21KBIW13RVX	P1D-S040MC-0080	D41FHE02C2VB00	VG35-XERC
21KBIW13RVXS	P1D-S040MC-0080	D41FHE02C4NB00	VG35-XERC
21KBIW17EVX	P1D-S040MC-0100	D41FHE02C4NE00	VG45-AA
21KBIW17MPN	P1D-S040MC-0100	D41FHE02C4NS00	VG45-AA
21KBIW17MPNS	P1D-S040MC-0125	D41FHE02C4VB00	VG45-AERC
21KBIW17MPNS_02	P1D-S040MC-0125	D41FHE02E1NB00	VG45-AERC
21KBIW17MPX	P1D-S040MC-0160	D41FHE02E1NE00	VG45-AERER
21KBIW17MPXS	P1D-S040MC-0160	D41FHE02E1NE00XG029	VG45-AERER
21KBIW17MVX	P1D-S040MC-0250	D41FHE02E2NB00	VG45-AERS
21KBIW17RKX	P1D-S040MC-0250	D41FHE02E2NE00	VG45-AERS
21KBIW17RVX	P1D-S040MC-0320	D41FHE02E4NB00	VG45-AS
21KBIW17RVXS	P1D-S040MC-0320	D41FHE02E4NB08	VG45-AS
21KBKE06DPX	P1D-S040MC-0400	D41FHE02E4NS00	VG45-EAEA
21KBKE06FVX	P1D-S040MC-0400	D41FHE02E5NB00	VG45-EAEA
21KBKE06MPN	P1D-S040MC-0700	D41FHE02F1NB00	VG45-EAS
21KBKE06MPX	P1D-S040MC-0700	D41FHE02F1NE00	VG45-EAS
21KBKE08DPX	P1D-S040MF-0040	D41FHE02F1NS00	VG45-ERC
21KBKE08FVX	P1D-S040MF-0040	D41FHE02F2NB00	VG45-ERC
21KBKE08MPN	P1D-S040MR-0080N1NNN	D41FHE02F2NE00	VG45-ERER
21KBKE08MPX	P1D-S040MR-0080N1NNN	D41FHE02F2NS00	VG45-ERER
21KBKEXXDPX	P1D-S040MS-0010	D41FHE02F4NB00	VG45-ERER-DB49
21KBKEXXFEX	P1D-S040MS-0010	D41FHE02F4NE00	VG45-ERER-DB49
21KBKEXXFVX	P1D-S040MS-0015	D41FHE06F1NB00	VG45-ERS
21KBKK06MPN	P1D-S040MS-0015	D41FHE52B1NB00	VG45-ERS
21KBKK06MPX	P1D-S040MS-0020	D41FHE52B1VB00	VG45-ERS-BN
21KBKK06MVN	P1D-S040MS-0020	D41FHE52B2VB00	VG45-ERS-BN
21KBKK08MPN	P1D-S040MS-0030	D41FHE52B4NB00	VG45-XAC
21KBKK08MPX	P1D-S040MS-0030	D41FHE52B4VB00	VG45-XAC
21KBKK08MVN	P1D-S040MS-0040HNNNN	D41FHE52C1NB00	VG45-XERC
21KBKK08MVN0S	P1D-S040MS-0040HNNNN	D41FHE52C1VB00	VG45-XERC
21KBKK08MVN3S	P1D-S040MS-0050	D41FHE52C2NB00	VH04.5CFX
21KBKK08MVN8S	P1D-S040MS-0050	D41FHE52C2NE00	VH04.5MSX
21KBKK08REX	P1D-S040MS-0050NG000	D41FHE52C2VB00	VH0471X
21KBKK08RVX	P1D-S040MS-0050NG000	D41FHE52C4NB00	VH04CFX
21KBKO06DPX	P1D-S040MS-0050NNCNN	D41FHE52C4NE00	VH04MSX
21KBKO06DPXG	P1D-S040MS-0050NNCNN	D41FHE52C4NS00	VH0571X
21KBKO06DPXGB	P1D-S040MS-0060	D41FHE52C4VB00	VH05CFX

21KBKO06DPXGG	P1D-S040MS-0060	D41FHE52C5NB00	VH05MSX
21KBKO06DPXGR	P1D-S040MS-0065	D41FHE52E1NB00	VH06.571X
21KBKO06DPXGY	P1D-S040MS-0065	D41FHE52E1NE00	VH06.5CFX
21KBKO06DVX	P1D-S040MS-0069	D41FHE52E2NB00	VH06.5MSX
21KBKO06EVX	P1D-S040MS-0069	D41FHE52E4NB00	VH06.5X
21KBKO06FEX	P1D-S040MS-0070	D41FHE52E5NB00	VH0671X
21KBKO06FEXG	P1D-S040MS-0070	D41FHE52F1NB00	VH06CFX
21KBKO06FEXGB	P1D-S040MS-0075	D41FHE52F1NE00	VH06MSX
21KBKO06FEXGR	P1D-S040MS-0075	D41FHE52F1NS00	VH0771X
21KBKO06FEXGY	P1D-S040MS-0075CNNNN	D41FHE52F2NB00	VH07CFX
21KBKO06FVX	P1D-S040MS-0075CNNNN	D41FHE52F2NE00	VH07MSX
21KBKO06FVXG	P1D-S040MS-0080	D41FHE52F2VB00	VH0871X
21KBKO06FVXGB	P1D-S040MS-0080	D41FHE52F4NB00	VH08CFX
21KBKO06FVXGG	P1D-S040MS-0080HNNNN	D41FHE52F4NE00	VH08MSX
21KBKO06FVXGR	P1D-S040MS-0080HNNNN	D41FHE52F4VB00	VH0971X
21KBKO06FVXGY	P1D-S040MS-0082	D41FHE52F5NB00	VH09CFX
21KBKO06MEN	P1D-S040MS-0082	D41FHE52F5VB00	VH09MSX
21KBKO06MEX	P1D-S040MS-0090	D41FHE82C1NB00	VH10.571X
21KBKO06MPD	P1D-S040MS-0090	D41FHE82C1NE00	VH1071X
21KBKO06MPN	P1D-S040MS-0100	D41FPA61FA2NK70	VH10CFX
21KBKO06MPX	P1D-S040MS-0100	D41FPA61FB2NK00	VH10MSX
21KBKO06MPXS_01	P1D-S040MS-0110	D41FPB31FC2NK00	VH11CFX
21KBKO06MPXS_02	P1D-S040MS-0110	D41FPB31FC2NS00	VH11MSX
21KBKO06MPXS_03	P1D-S040MS-0120	D41FPB32FC4NS00	VH1271X
21KBKO06MVN	P1D-S040MS-0120	D41FPB61FA2NB70	VH12CFX
21KBKO06MVX	P1D-S040MS-0130	D41FPB61FB2NK70	VH12MSX
21KBKO06RKX	P1D-S040MS-0130	D41FPB61FB2NS70	VH1371X
21KBKO06RVX	P1D-S040MS-0140	D41FPB61FB4NK00	VH13CFX
21KBKO06RVX6	P1D-S040MS-0140	D41FPB61FB5NK00	VH13MSX
21KBKO06RVX8	P1D-S040MS-0150	D41FPE01FC1NK70	VH1471X
21KBKO08DEXG	P1D-S040MS-0150	D41FPE01FC2NK00	VH14CFX
21KBKO08DEXGY	P1D-S040MS-0150NNN6N	D41FPE01FC4NE70	VH14MSX
21KBKO08DPX	P1D-S040MS-0150NNN6N	D41FPE01FC4NK00	VH1571X
21KBKO08DPXG	P1D-S040MS-0160	D41FPE01FC5NK00	VH15CFX
21KBKO08DPXGB	P1D-S040MS-0160	D41FPE02FC2NK00	VH15MSX
21KBKO08DPXGG	P1D-S040MS-0160KNNNN	D41FPE02FC2NS50	VH1671X
21KBKO08DPXGR	P1D-S040MS-0160KNNNN	D41FPE52FA2NK00	VH16CFX
21KBKO08DPXGY	P1D-S040MS-0160N7000	D41FPE52FA4NK00	VH16MSX
21KBKO08DPXS	P1D-S040MS-0160N7000	D41FPE52FA5NK70	VH1771X
21KBKO08EEX	P1D-S040MS-0170	D41FPE52FB1NK00	VH17CFX
21KBKO08EVX	P1D-S040MS-0170	D41FPE52FB2NB00	VH17MSX
21KBKO08FEX	P1D-S040MS-0180	D41FPE52FB2NK00	VH1871X
21KBKO08FEXG	P1D-S040MS-0180	D41FPE52FB4NB00	VH18CFX
21KBKO08FVX	P1D-S040MS-0200	D41FPE52FB4NK00	VH18MSX
21KBKO08FVXG	P1D-S040MS-0200	D41FPE52FB4NK70	VH1971X
21KBKO08FVXGB	P1D-S040MS-0200CYNNN	D41FPE52FB5NB00	VH19CFX
21KBKO08FVXGG	P1D-S040MS-0200CYNNN	D41FPE52FB5NK00	VH19MSX
21KBKO08FVXGR	P1D-S040MS-0220	D41FPE52FC1NS00	VH2071X
21KBKO08MEX	P1D-S040MS-0220	D41FPZ31FC1NS7L	VH20CFX
21KBKO08MPD	P1D-S040MS-0230	D41FPZ31FC2NK7L	VH20MSX
21KBKO08MPN	P1D-S040MS-0230	D41FPZ32FC4NK0L	VH2171X
21KBKO08MPNS	P1D-S040MS-0250	D41FPZ61FB2NB0L	VH21MSX
21KBKO08MPX	P1D-S040MS-0250	D41FPZ61FB2NB7L	VH2271X

21KBKO08MPX6	P1D-S040MS-0250VHFNY	D41FSA31C1NLW0	VH22MSX
21KBKO08MPXS_04	P1D-S040MS-0250VHFNY	D41FSA31C1NXW0	VH23CFX
21KBKO08MVN	P1D-S040MS-0270NFNNN	D41FSA31C4NXW0	VH2471X
21KBKO08MVN0	P1D-S040MS-0270NFNNN	D41FSA32C2NXW0	VH24CFX
21KBKO08MVN3	P1D-S040MS-0285	D41FSA32C4NLW0	VH24MSX
21KBKO08MVX	P1D-S040MS-0285	D41FSB11C1NLW0	VH2571X
21KBKO08MVXS_01	P1D-S040MS-0300	D41FSB11C1NXW0	VH25CFX
21KBKO08RVX	P1D-S040MS-0300	D41FSB12C2NLW0	VH25MSX
21KBKO08RVX6	P1D-S040MS-0320	D41FSB12C2NXW0	VH2671X
21KBKO08RVX8	P1D-S040MS-0320	D41FSB12C4NXW0	VH26CFX
21KBKP06FVX	P1D-S040MS-0320N7000	D41FSB13C4NXW0	VH26MSX
21KBKP08FEX	P1D-S040MS-0320N7000	D41FSB16C1NLW0	VH27CFX
21KBKP08FVX	P1D-S040MS-0350	D41FSB31C1NXW0	VH27MSX
21KBKS06DPX	P1D-S040MS-0350	D41FSB31C4NLW0	VH30CFX
21KBKS06DPXG	P1D-S040MS-0360	D41FSB31C4NXW0	VH3171X
21KBKS06DPXGB	P1D-S040MS-0360	D41FSB31C4NXW8	VH31CFX
21KBKS06DPXGG	P1D-S040MS-0365	D41FSB32C1NLW0	VH31MSX
21KBKS06DPXGR	P1D-S040MS-0365	D41FSB32C1NXW0	VH3271X
21KBKS06DPXGY	P1D-S040MS-0400	D41FSB32C2NLW0	VH32CFX
21KBKS06EVX	P1D-S040MS-0400	D41FSB32C2NXW0	VH32MSX
21KBKS06FVX	P1D-S040MS-0420	D41FSB32C4NLW0	VH33CFX
21KBKS06FVXG	P1D-S040MS-0420	D41FSB32C4NXW0	VH3471X
21KBKS06FVXGB	P1D-S040MS-0440	D41FSB34C2NXW0	VH34CFX
21KBKS06FVXGR	P1D-S040MS-0440	D41FSB34C4NXW0	VH3871X
21KBKS06MEX	P1D-S040MS-0450	D41FSE01C1NLW0	VH38CFX
21KBKS06MPC	P1D-S040MS-0450	D41FSE01C1NXW0	VH38MSX
21KBKS06MPN	P1D-S040MS-0500	D41FSE01C2NLW8	VH39MSX
21KBKS06MPN0	P1D-S040MS-0500	D41FSE01C2NXW0	VHC12-12EF
21KBKS06MPN6	P1D-S040MS-0500NG000	D41FSE01C2NXW8	VHC12-12F
21KBKS06MPNS	P1D-S040MS-0500NG000	D41FSE01C4NLW0	VHC12-12FSL
21KBKS06MPX	P1D-S040MS-0550	D41FSE01C4NXW0	VHC12-12FV
21KBKS06MPXS_03	P1D-S040MS-0550	D41FSE01C4NXW8	VHC12-12M
21KBKS06MVN	P1D-S040MS-0560	D41FSE01C5NLW0	VHC12-12RP
21KBKS06MVN8	P1D-S040MS-0560	D41FSE01C5NLW8	VHC12-SPK
21KBKS06MVX	P1D-S040MS-0590	D41FSE01C5NXW0	VHC16-16F
21KBKS06RVX	P1D-S040MS-0590	D41FSE01C5NXW8	VHC16-16FSL
21KBKS06RVXS	P1D-S040MS-0600	D41FSE01C5VLW0	VHC16-16FV
21KBKS08DEXG	P1D-S040MS-0600	D41FSE02C1NLW0	VHC16-16M
21KBKS08DEXGY	P1D-S040MS-0600NG000	D41FSE02C1NLW8	VHC16-16RP
21KBKS08DPX	P1D-S040MS-0600NG000	D41FSE02C1NXW0	VHC16-SPK
21KBKS08DPXGB	P1D-S040MS-0650	D41FSE02C1VXW0	VHC20-20F
21KBKS08DPXGG	P1D-S040MS-0650	D41FSE02C2NLW0	VHC20-20FSL
21KBKS08DPXGR	P1D-S040MS-0700	D41FSE02C4NLW0	VHC20-20FV
21KBKS08DPXGY	P1D-S040MS-0700	D41FSE02C4NXW0	VHC20-20M
21KBKS08FVX	P1D-S040MS-0720	D41FSE02C4VXW0	VHC20-20RP
21KBKS08FVXG	P1D-S040MS-0720	D41FSE02C5NLW0	VHC24-24F
21KBKS08FVXGB	P1D-S040MS-0750	D41FSE04C4NLW0	VHC24-24FSL
21KBKS08FVXGG	P1D-S040MS-0750	D41FSE04C4NXW0	VHC24-24RP
21KBKS08FVXGR	P1D-S040MS-0800	D41FSE06C1NXW0	VHC32-32F
21KBKS08FVXGY	P1D-S040MS-0800	D41FSE06C4NXW0	VHC4-4EM
21KBKS08MEX	P1D-S040MS-0800NNTNN	D41VW001C1NJW	VHC4-4F
21KBKS08MPN	P1D-S040MS-0800NNTNN	D41VW001C1NJWTI6N	VHC4-4FSL
21KBKS08MPNS_01	P1D-S040MS-0820	D41VW001C1NTW	VHC4-4FV

21KBKS08MPNS_02	P1D-S040MS-0820	D41VW001C1NTW3A	VHC4-4M
21KBKS08MPNS_03	P1D-S040MS-0850	D41VW001C1NYW	VHC4-4MSL
21KBKS08MPX	P1D-S040MS-0850	D41VW001C1VJW3A	VHC4-4RP
21KBKS08MVN	P1D-S040MS-0900	D41VW001C2NJDTJI6N5	VHC6-6EMV
21KBKS08RVX	P1D-S040MS-0900	D41VW001C2NJW	VHC6-6F
21KBKS46MPX	P1D-S040MS-1000	D41VW001C2NJW1R	VHC6-6FSL
21KBTE04DPX	P1D-S040MS-1000	D41VW001C2NJW3A	VHC6-6FV
21KBTE04FVX	P1D-S040MS-1000NNTNN	D41VW001C2NJWI3N	VHC6-6M
21KBTE04MPN	P1D-S040MS-1000NNTNN	D41VW001C2NJWI6N	VHC6-6RP
21KBTE04MPX	P1D-S040MS-1020	D41VW001C2NJWTI6N	VHC6-SPK
21KBTE06DEX	P1D-S040MS-1020	D41VW001C2NTW3B	VHC6-SPKV
21KBTE06DPX	P1D-S040MS-1050	D41VW001C3NJWI6N	VHC8-8EF
21KBTE06FEX	P1D-S040MS-1050	D41VW001C4NGW	VHC8-8F
21KBTE06FVX	P1D-S040MS-1060	D41VW001C4NJW	VHC8-8FE
21KBTE06MPN	P1D-S040MS-1060	D41VW001C4NJW1T	VHC8-8FSL
21KBTE06MPX	P1D-S040MS-1100	D41VW001C4NJW3A	VHC8-8FV
21KBTE08DPX	P1D-S040MS-1100	D41VW001C4NJW3B	VHC8-8M
21KBTE08MPN	P1D-S040MS-1150NG000	D41VW001C4NJW3C	VHC8-8RP
21KBTE09MPN	P1D-S040MS-1150NG000	D41VW001C4NJW3F	VHC8-SPK
21KBTE09MPX	P1D-S040MS-1220	D41VW001C4NJW3K	VHN12-12F
21KBTE10MPN	P1D-S040MS-1220	D41VW001C4NJW4D	VHN12-12FV
21KBTE10MPX	P1D-S040MS-1300	D41VW001C4NJWI6N	VHN12-12M
21KBTF04DPX	P1D-S040MS-1300	D41VW001C4NJWTI6N	VHN12-12RP
21KBTF04DPXG	P1D-S040MS-1400	D41VW001C4NTW	VHN12-SPK
21KBTF04DPXGB	P1D-S040MS-1400	D41VW001C4NUW	VHN16-16F
21KBTF04DPXGG	P1D-S040MS-1450	D41VW001C4NYW	VHN16-16FV
21KBTF04DPXGR	P1D-S040MS-1450	D41VW001C4VJW	VHN16-16M
21KBTF04DPXGY	P1D-S040MS-2100	D41VW001C4VJW3A	VHN16-16RP
21KBTF04EVX	P1D-S040MS-2100	D41VW001C5NJW	VHN20-20F
21KBTF04FVX	P1D-S040VS-0500	D41VW001C5NJWTI6N	VHN20-20FV
21KBTF04FVXGB	P1D-S040VS-0500	D41VW001C6NJW3A	VHN20-20RP
21KBTF04FVXGR	P1D-S040VS-0600	D41VW001C6NJW3F	VHN24-24F
21KBTF04MPN	P1D-S040VS-0600	D41VW001C6NJWI6N	VHN24-24RP
21KBTF04MPNS	P1D-S040WS-0720	D41VW001E1NJW3D	VHN32-32F
21KBTF04MPNS_04	P1D-S040WS-0720	D41VW001E2NJAXG172	VHN4-4EM
21KBTF04MPX	P1D-S050AM-02505NNNN	D41VW001E2NJW	VHN4-4F
21KBTF04MPX0	P1D-S050AM-02505NNNN	D41VW001E2NJWI2N	VHN4-4FV
21KBTF04MPXS_02	P1D-S050AS-0040	D41VW001E2NJWI5N	VHN4-4M
21KBTF04RVX	P1D-S050AS-0040	D41VW001E2NJWTI5N	VHN4-4ME
21KBTF04RVXS	P1D-S050AS-0110	D41VW001E2NTW	VHN4-4MV
21KBTF05MPN	P1D-S050AS-0110	D41VW001E4NJW	VHN4-4RP
21KBTF05MPX	P1D-S050AS-0150	D41VW001E4NJWI5N	VHN6-6EMV
21KBTF05MPXS	P1D-S050AS-0150	D41VW001E5NJW	VHN6-6F
21KBTF05MVN	P1D-S050AS-0200	D41VW001F2NJAXG172	VHN6-6FV
21KBTF05RVX	P1D-S050AS-0200	D41VW001F2NJW	VHN6-6RP
21KBTF06DEX	P1D-S050AS-0400RNNNN	D41VW001F2NJWTI5N	VHN6-SPK
21KBTF06DPX	P1D-S050AS-0400RNNNN	D41VW001F2NYW	VHN8-8EF
21KBTF06DPXG	P1D-S050AS-0675	D41VW001F4NJW	VHN8-8F
21KBTF06DPXGB	P1D-S050AS-0675	D41VW001K1NJW	VHN8-8FE
21KBTF06DPXGG	P1D-S050AS-0685	D41VW001K2NJW	VHN8-8FV
21KBTF06DPXGR	P1D-S050AS-0685	D41VW001K2NJWI3NXG095	VHN8-8M
21KBTF06DPXGY	P1D-S050AS-0690	D41VW001K2NJWI4N	VHN8-8RP
21KBTF06EVX	P1D-S050AS-0690	D41VW001K2NJWTI4N	VHN8-8RPV

21KBTF06FEX	P1D-S050AS-0770	D41VW001K4NJW	VHN8-SPK
21KBTF06FVX	P1D-S050AS-0770	D41VW001K4NJWI4N	VIX250AE
21KBTF06FVXG	P1D-S050AS-0830	D41VW001M5NJW	VIX250CM
21KBTF06FVXGB	P1D-S050AS-0830	D41VW002C1NJWX729	VIX250IE
21KBTF06FVXGG	P1D-S050DM-0425	D41VW002C1NKWX729	VIX250IH
21KBTF06FVXGR	P1D-S050DM-0425	D41VW002C2NJW	VIX250IM
21KBTF06FVXGY	P1D-S050DR-0425	D41VW002C2NJWTI6N	VIX500IE
21KBTF06MEN	P1D-S050DR-0425	D41VW002C2NUW	VIX500IEK024
21KBTF06MEX	P1D-S050DS-0425	D41VW002C3NJW	VIX500IEK025
21KBTF06MPC	P1D-S050DS-0425	D41VW002C5NJW	VIX500IH
21KBTF06MPN	P1D-S050FC-0050	D41VW002C5NJWW	VIX500IM
21KBTF06MPN3	P1D-S050FC-0050	D41VW002C6NJEE	VIX-CDROM
21KBTF06MPNS_04	P1D-S050FS-0050	D41VW002C6NJW	VIX-FDB-1000
21KBTF06MPNS_05	P1D-S050FS-0050	D41VW002C6NJW3B	VIX-KIT
21KBTF06MPX	P1D-S050FS-0051	D41VW002C6NJWI5N	VIX-MANUAL-CAN
21KBTF06MPX0	P1D-S050FS-0051	D41VW002C6NJWI6N	VIX-MANUAL-IM
21KBTF06MPX3	P1D-S050FS-0070	D41VW002C6NTW	VIX-PWR-1000
21KBTF06MPX6	P1D-S050FS-0070	D41VW002E1NJWX729	VIX-RJ45-0025
21KBTF06MPX8	P1D-S050FS-0072	D41VW002E3NJW	VK08S
21KBTF06MPXS_02	P1D-S050FS-0072	D41VW002E5NJW	VK10
21KBTF06MPXS_03	P1D-S050FS-0200	D41VW002E5NJWTI5N	VK10N
21KBTF06MPXS_04	P1D-S050FS-0200	D41VW002E6NJW	VK10S
21KBTF06MVN	P1D-S050HS-0110	D41VW002F2NJAXG172	VK10S_03
21KBTF06MVX	P1D-S050HS-0110	D41VW002K2NJW	VK11042
21KBTF06RVX	P1D-S050HS-0425	D41VW002K2NJWTI4N	VK12S
21KBTF06RVXS_01	P1D-S050HS-0425	D41VW002K6NGW	VK13
21KBTF08EEX	P1D-S050MC-0020	D41VW003C1NGW3K	VK13N
21KBTF08EVX	P1D-S050MC-0020	D41VW003C1NJW	VK17
21KBTF08MEN	P1D-S050MC-0025	D41VW003C3NJW	VK17N
21KBTF08MPN	P1D-S050MC-0025	D41VW003C4NJW	VK21
21KBTF08MPNS	P1D-S050MC-0040	D41VW003C4NYW	VK21N
21KBTF08MPNS_02	P1D-S050MC-0040	D41VW003C5NJW3F	VK31017
21KBTF08MPX	P1D-S050MC-0050	D41VW003C5NJWTI6N	VK31512
21KBTF08MPXS_01	P1D-S050MC-0050	D41VW003C6NJW3F	VK60004
21KBTF08MVN	P1D-S050MC-0055	D41VW003E4NJW	VKA0671
21KBTF08MVX	P1D-S050MC-0055	D41VW003F1NJWI2N	VKA06CF
21KBTF08REX	P1D-S050MC-0080	D41VW003F1NJWI2N3C	VKA06MS
21KBTF08RVX	P1D-S050MC-0080	D41VW003F1NJWI2N3CXG095	VKA06VITCF
21KBTF09EVX	P1D-S050MC-0100	D41VW003K2NJWTI4N	VKA08
21KBTF09MEX	P1D-S050MC-0100	D41VW003K4NJW	VKA0871
21KBTF09MPD	P1D-S050MC-0110	D41VW003K4NJWTI4N	VKA08CF
21KBTF09MPN	P1D-S050MC-0110	D41VW004C1NGW	VKA08MS
21KBTF09MPX	P1D-S050MC-0125	D41VW004C1NJEE3B	VKA08NBR71
21KBTF09MPXS_01	P1D-S050MC-0125	D41VW004C1NJW	VKA08VITCF
21KBTF09MVN	P1D-S050MC-0145	D41VW004C1NJW3A	VKA1/06LCF
21KBTF09MVN6	P1D-S050MC-0145	D41VW004C1NJW3B	VKA1/06SCF
21KBTF09RVX	P1D-S050MC-0160	D41VW004C1NJW3F	VKA1/08LCF
21KBTF10EEX	P1D-S050MC-0160	D41VW004C1NJW3K	VKA1/08SCF
21KBTF10EVX	P1D-S050MC-0200	D41VW004C1NJW3R	VKA1/10LCF
21KBTF10MED	P1D-S050MC-0200	D41VW004C1NJWI5N	VKA1/10SCF
21KBTF10MEN	P1D-S050MC-0215NTNNN	D41VW004C1NJWTI6N	VKA1/12LCF
21KBTF10MPN	P1D-S050MC-0215NTNNN	D41VW004C1NTW	VKA1/12SCF
21KBTF10MPNS	P1D-S050MC-0225	D41VW004C1NTW3A	VKA1/15LCF

21KBTF10MPX	P1D-S050MC-0225	D41VW004C1NTW3F	VKA1/16SCF
21KBTF10MPXS_01	P1D-S050MC-0250	D41VW004C1NYW	VKA1/18LCF
21KBTF10MVN	P1D-S050MC-0250	D41VW004C1VJW	VKA1/20SCF
21KBTF10MVX	P1D-S050MC-0320	D41VW004C1VYW3A	VKA1/22LCF
21KBTF10RVX	P1D-S050MC-0320	D41VW004C2NGW	VKA10
21KBTP06MPN	P1D-S050MC-0400	D41VW004C2NJW	VKA1071
21KBTP06MPX	P1D-S050MC-0400	D41VW004C2NJW3A	VKA10CF
21KBTP06MVX	P1D-S050MC-0500	D41VW004C2NJW3B	VKA10MS
21KBTP06RVX	P1D-S050MC-0500	D41VW004C2NJW3F	VKA10VITCF
21KBTS04DPX	P1D-S050MC-0600NFNNN	D41VW004C2NJWTI6N	VKA12
21KBTS04DPXG	P1D-S050MC-0600NFNNN	D41VW004C2VJW	VKA1271
21KBTS04DPXGB	P1D-S050MC-0950	D41VW004C4NGW	VKA12CF
21KBTS04DPXGG	P1D-S050MC-0950	D41VW004C4NGW3R	VKA12CRCF
21KBTS04DPXGR	P1D-S050MC-1000C1NNN	D41VW004C4NJEE3B	VKA12MS
21KBTS04DPXGY	P1D-S050MC-1000C1NNN	D41VW004C4NJW	VKA12VITCF
21KBTS04FVX	P1D-S050MC-1100NFNNN	D41VW004C4NJW1T	VKA1471
21KBTS04FVXG	P1D-S050MC-1100NFNNN	D41VW004C4NJW3A	VKA14CF
21KBTS04FVXGB	P1D-S050MC-1300	D41VW004C4NJW3B	VKA1571
21KBTS04FVXGR	P1D-S050MC-1300	D41VW004C4NJW3C	VKA15CF
21KBTS04FVXGY	P1D-S050MC-1400C1NNN	D41VW004C4NJW3F	VKA15MS
21KBTS04MPN	P1D-S050MC-1400C1NNN	D41VW004C4NJW3K	VKA15VITCF
21KBTS04MPNS_01	P1D-S050MS/S60426	D41VW004C4NJW3R	VKA16
21KBTS04MPX	P1D-S050MS/S60426	D41VW004C4NJWI5NX129	VKA1671
21KBTS04MPX0	P1D-S050MS-0010	D41VW004C4NJWI6N	VKA16CF
21KBTS04MPX3	P1D-S050MS-0010	D41VW004C4NJWW	VKA16VITCF
21KBTS04MPX6	P1D-S050MS-0020	D41VW004C4NPEE	VKA1871
21KBTS04MPX8	P1D-S050MS-0020	D41VW004C4NTW	VKA18CF
21KBTS05MPN	P1D-S050MS-0025	D41VW004C4NUW	VKA18MS
21KBTS05MPX	P1D-S050MS-0025	D41VW004C4NYW	VKA18VITCF
21KBTS05MPXS_02	P1D-S050MS-0030	D41VW004C4VJW	VKA20
21KBTS05RVX	P1D-S050MS-0030	D41VW004C4VJW3A	VKA2071
21KBTS06DEX	P1D-S050MS-0040C5NNN	D41VW004C5NJW	VKA20CF
21KBTS06DPX	P1D-S050MS-0040C5NNN	D41VW004C5NJW3F	VKA20MS
21KBTS06DPXG	P1D-S050MS-0040NFNNN	D41VW004C5NJW3M	VKA20VITCF
21KBTS06DPXGB	P1D-S050MS-0040NFNNN	D41VW004C5NJWI6N	VKA2271
21KBTS06DPXGG	P1D-S050MS-0050	D41VW004C5NJWT	VKA22CF
21KBTS06DPXGR	P1D-S050MS-0050	D41VW004C5VJW	VKA22MS
21KBTS06DPXGY	P1D-S050MS-0050N7000	D41VW004C6NJW	VKA22VITCF
21KBTS06FEX	P1D-S050MS-0050N7000	D41VW004C6VJW	VKA2571
21KBTS06FVX	P1D-S050MS-0050NDNNN	D41VW004E1NJW	VKA25CF
21KBTS06FVXG	P1D-S050MS-0050NDNNN	D41VW004E2NJWI5N	VKA25VITCF
21KBTS06FVXGB	P1D-S050MS-0060	D41VW004E4NJW	VKA2871
21KBTS06FVXGG	P1D-S050MS-0060	D41VW004K1NJW	VKA28CF
21KBTS06FVXGR	P1D-S050MS-0065	D41VW004K2NJW	VKA28MS
21KBTS06MEN	P1D-S050MS-0065	D41VW004K2NJW3E	VKA28VITCF
21KBTS06MENS_01	P1D-S050MS-0070	D41VW004K4NJWI4N	VKA3/06L71
21KBTS06MENS_02	P1D-S050MS-0070	D41VW006C1NJW	VKA3/06LCF
21KBTS06MPN	P1D-S050MS-0075	D41VW006C1NTW3A	VKA3/06LVITCF
21KBTS06MPNS_01	P1D-S050MS-0075	D41VW006E1NJW3M	VKA3/06S71
21KBTS06MPNS_03	P1D-S050MS-0075NNN6N	D41VW006K4NTW	VKA3/06SCF
21KBTS06MPX	P1D-S050MS-0075NNN6N	D41VW007C2NJW	VKA3/06SVITCF
21KBTS06MPXS_01	P1D-S050MS-0080	D41VW007C2NJW3A	VKA3/08L71
21KBTS06MPXS_02	P1D-S050MS-0080	D41VW007C3NTW	VKA3/08LCF

21KBTS06MVN	P1D-S050MS-0080NG000	D41VW009C1NJW	VKA3/08LVITCF
21KBTS06RVX	P1D-S050MS-0080NG000	D41VW009C1NJW3CX729	VKA3/08S71
21KBTS08MEX	P1D-S050MS-0090	D41VW009C1NJWI3N	VKA3/08SCF
21KBTS08MPN	P1D-S050MS-0090	D41VW009C1NJWI3N3A	VKA3/08SVITCF
21KBTS08MPNS_01	P1D-S050MS-0100	D41VW009C1NJWX729	VKA3/10L71
21KBTS08MPX	P1D-S050MS-0100	D41VW009C1NKWX729	VKA3/10LCF
21KBTS08MPXS_01	P1D-S050MS-0100NNFNN	D41VW009C2NJG3AX976	VKA3/10LVITCF
21KBTS08MPXS_02	P1D-S050MS-0100NNFNN	D41VW009C2NJW	VKA3/10S71
21KBTS08MPXS_03	P1D-S050MS-0110	D41VW009C2NJW3A	VKA3/10SCF
21KBTS08MPXS_05	P1D-S050MS-0110	D41VW009C2NJW3B	VKA3/10SVITCF
21KBTS08MPXS_06	P1D-S050MS-0115	D41VW009C2NJWI6N	VKA3/12L71
21KBTS08MVN	P1D-S050MS-0115	D41VW009C2NJWTI4N	VKA3/12LCF
21KBTS08MVX	P1D-S050MS-0120	D41VW009C2NJWTI6N	VKA3/12LVITCF
21KBTS08RVX	P1D-S050MS-0120	D41VW009C2NJWTI6N3A	VKA3/12S71
21KBTS09MPN	P1D-S050MS-0125	D41VW009C3NJW	VKA3/12SCF
21KBTS09MPX	P1D-S050MS-0125	D41VW009C3NJW3A	VKA3/12SVITCF
21KBTS10MPN	P1D-S050MS-0125NG000	D41VW009C3NJWI3N3A	VKA3/14S71
21KBTS10MPX	P1D-S050MS-0125NG000	D41VW009C3NTW	VKA3/14SCF
21KDAW10MPN	P1D-S050MS-0125NNHNN	D41VW009C5NJW3A	VKA3/15L71
21KDAW13MENS_01	P1D-S050MS-0125NNHNN	D41VW009C5NJWI6N	VKA3/15LCF
21KDAW13MPN	P1D-S050MS-0130	D41VW009C6NGW	VKA3/15LVITCF
21KDAW17MPN	P1D-S050MS-0130	D41VW009C6NJW	VKA3/16S71
21KDIW10MPN	P1D-S050MS-0140	D41VW009C6NJW3B	VKA3/16SCF
21KDIW13MPN	P1D-S050MS-0140	D41VW009C6NJWI6N	VKA3/18L71
21KDIW17MPN	P1D-S050MS-0140NDNNN	D41VW009C6NKW	VKA3/18LCF
21KDTF06MENS_01	P1D-S050MS-0140NDNNN	D41VW009C6NTW	VKA3/18LVITCF
21KDTF06MPN	P1D-S050MS-0145	D41VW009C6NYWX976	VKA3/20S71
21KDTF08MPN	P1D-S050MS-0145	D41VW009E1NJWX729	VKA3/20SCF
21KDTF10MPN	P1D-S050MS-0150	D41VW009E2NJW	VKA3/22L71
21KFAM12RVX	P1D-S050MS-0150	D41VW009E2NJWTI4N	VKA3/22LCF
21KFAN10MPX	P1D-S050MS-0150NG113	D41VW009E6NJW	VKA3/22LVITCF
21KFAN13MPX	P1D-S050MS-0150NG113	D41VW009F6NJW	VKA3/25S71
21KFAW10EVX	P1D-S050MS-0160	D41VW009K2NJW	VKA3/25SCF
21KFAW10MPN	P1D-S050MS-0160	D41VW009K2NJWTI5N	VKA3/25SVITCF
21KFAW10MPNS_01	P1D-S050MS-0160NG000	D41VW009K6NJW	VKA3/28L71
21KFAW10MPX	P1D-S050MS-0160NG000	D41VW009K6NJWX976	VKA3/28LCF
21KFAW10MVX	P1D-S050MS-0160NNN6N	D41VW011C1NJW	VKA3/28LVITCF
21KFAW10RVX	P1D-S050MS-0160NNN6N	D41VW011C1NJW3K	VKA3/30S71
21KFAW13EVX	P1D-S050MS-0160SG160	D41VW011C2NJW	VKA3/30SCF
21KFAW13FVX	P1D-S050MS-0160SG160	D41VW011C2VJW	VKA3/35L71
21KFAW13MPN	P1D-S050MS-0180	D41VW011C4NJW	VKA3/35LCF
21KFAW13MPX	P1D-S050MS-0180	D41VW011C4NJW3C	VKA3/35LVITCF
21KFAW13MPXS	P1D-S050MS-0195	D41VW011C4NJW3F	VKA3/38S71
21KFAW13MVC6	P1D-S050MS-0195	D41VW011C4NJWT3F	VKA3/38SCF
21KFAW13MVC8	P1D-S050MS-0200	D41VW011C4VJW3A	VKA3/42L71
21KFAW13RVX	P1D-S050MS-0200	D41VW011C6NYW3C	VKA3/42LCF
21KFAW17MPN	P1D-S050MS-0200NNN6N	D41VW011E1NJW	VKA3/42LVITCF
21KFAW17RVX	P1D-S050MS-0200NNN6N	D41VW011E4NJW1T	VKA3071
21KFIM12MPX	P1D-S050MS-0216	D41VW012C2NSW3RX610	VKA30CF
21KFIN13MPN	P1D-S050MS-0216	D41VW012C4NJW3A	VKA30VITCF
21KFIW10EVX	P1D-S050MS-0220	D41VW012C5NJEEC060615	VKA3571
21KFIW10MPN	P1D-S050MS-0220	D41VW012C5NJW	VKA35CF
21KFIW10MPX	P1D-S050MS-0225	D41VW012C5NJWC060615	VKA35MS

21KFIW10MVN	P1D-S050MS-0225	D41VW014E6NJW	VKA35VITCF
21KFIW10RVX	P1D-S050MS-0250	D41VW015C1NJW	VKA3871
21KFIW13EVX	P1D-S050MS-0250	D41VW015C2NJW	VKA38CF
21KFIW13MEN	P1D-S050MS-0250CENNN	D41VW015C2NJWI6N	VKA38VITCF
21KFIW13MPN	P1D-S050MS-0250CENNN	D41VW015C2NJWT	VKA4/08S71
21KFIW13MPNS	P1D-S050MS-0250NG000	D41VW015C4NJW	VKA4271
21KFIW13MPX	P1D-S050MS-0250NG000	D41VW015E4NJW	VKA42CF
21KFIW13MPXS	P1D-S050MS-0275	D41VW020B1NGW	VKA42MS
21KFIW13MVX	P1D-S050MS-0275	D41VW020B1NJW	VKA42VITCF
21KFIW13RVX	P1D-S050MS-0280	D41VW020B1NJW3F	VKAM06L71
21KFIW13SVNS	P1D-S050MS-0280	D41VW020B1NJWI5N	VKAM06LCF
21KFIW17MPX	P1D-S050MS-0300	D41VW020B1NJWTI5N	VKAM06LCRCF
21KFIW17RPX	P1D-S050MS-0300	D41VW020B1NKW	VKAM06LVITCF
21KFKK06MPN	P1D-S050MS-0320	D41VW020B1NTW3A	VKAM06S71
21KFKK06MPX	P1D-S050MS-0320	D41VW020B2NJAXG172	VKAM06SCF
21KFKO06MPN	P1D-S050MS-0340	D41VW020B2NJW	VKAM08L71
21KFKO06MPN0	P1D-S050MS-0340	D41VW020B2NJW3A	VKAM08LCF
21KFKO06MPX	P1D-S050MS-0350	D41VW020B2NJWI5N	VKAM08LVITCF
21KFKO06RVX	P1D-S050MS-0350	D41VW020B2NJWTI5N	VKAM08S71
21KFKO08DPX	P1D-S050MS-0350CHNNN	D41VW020B2NTW	VKAM08SCF
21KFKO08MPN	P1D-S050MS-0350CHNNN	D41VW020B3NJWXG044	VKAM08SVITCF
21KFKO08MPN3	P1D-S050MS-0365	D41VW020B3NTW	VKAM10L71
21KFKO08MPX	P1D-S050MS-0365	D41VW020B4NGW	VKAM10LCF
21KFKS06MPN	P1D-S050MS-0370	D41VW020B4NGWC999999	VKAM10LCRCF
21KFKS06MPX	P1D-S050MS-0370	D41VW020B4NJEE	VKAM10LVITCF
21KFKS08MPN	P1D-S050MS-0380	D41VW020B4NJW	VKAM10S71
21KFKS08MPX	P1D-S050MS-0380	D41VW020B4NJW3A	VKAM10S71N
21KFTF04EVX	P1D-S050MS-0400	D41VW020B4NJW3B	VKAM10SCF
21KFTF04MPN	P1D-S050MS-0400	D41VW020B4NJWI5N	VKAM10SVITCF
21KFTF04MPX	P1D-S050MS-0425	D41VW020B4NJWI5NXG095	VKAM12L71
21KFTF04RVX	P1D-S050MS-0425	D41VW020B4NJWT	VKAM12LCF
21KFTF05MPN0	P1D-S050MS-0430	D41VW020B4NJWTI5N	VKAM12LNBR71
21KFTF05MVN	P1D-S050MS-0430	D41VW020B4NTEE	VKAM12LVITCF
21KFTF06DPX	P1D-S050MS-0450	D41VW020B4NTW	VKAM12S71
21KFTF06DPXG	P1D-S050MS-0450	D41VW020B4NYW	VKAM12SCF
21KFTF06EVX	P1D-S050MS-0500	D41VW020B4VJW	VKAM12SVITCF
21KFTF06MPN	P1D-S050MS-0500	D41VW020B5NGW3A	VKAM14S71
21KFTF06MPX	P1D-S050MS-0500NG000	D41VW020B5NJW	VKAM14SCF
21KFTF06MVX	P1D-S050MS-0500NG000	D41VW020B5NJW3A	VKAM15L71
21KFTF06MVXS	P1D-S050MS-0520	D41VW020B5NJWTI5N	VKAM15LCF
21KFTF08MPN	P1D-S050MS-0520	D41VW020B5VJW3A	VKAM15LVITCF
21KFTF08MPX	P1D-S050MS-0550	D41VW020B6NJEE	VKAM16S71
21KFTF08RVX	P1D-S050MS-0550	D41VW020B6NJW	VKAM16SCF
21KFTF09EVX	P1D-S050MS-0600	D41VW020B6NJW3E	VKAM16SVITCF
21KFTF09MPN	P1D-S050MS-0600	D41VW020B6NJWI5N	VKAM18L71
21KFTF09MPX	P1D-S050MS-0600C1NNN	D41VW020B6VJW3A	VKAM18LCF
21KFTF09MVX	P1D-S050MS-0600C1NNN	D41VW020D1NJW	VKAM18LCRCF
21KFTF10MPN	P1D-S050MS-0640	D41VW020D1NJW3A	VKAM18LVITCF
21KFTF10MPX	P1D-S050MS-0640	D41VW020D1VJW	VKAM20S71
21KFTF10RVX	P1D-S050MS-0650	D41VW020D2NJW	VKAM20SCF
21KFTS04MPN6	P1D-S050MS-0650	D41VW020D2VJW	VKAM22L71
21KFTS04MPN8	P1D-S050MS-0700	D41VW020D4NJEE	VKAM22LCF
21KLAD12MPX	P1D-S050MS-0700	D41VW020D4NJW	VKAM22LVITCF

21KLAD14MPX	P1D-S050MS-0720	D41VW020D4VJW	VKAM25S71
21KLAM14RVX	P1D-S050MS-0720	D41VW020D4VJW3A	VKAM25SCF
21KLAN10MPX	P1D-S050MS-0720NG000	D41VW020D5NJW	VKAM25SVITCF
21KLAN13EVX	P1D-S050MS-0720NG000	D41VW020D5VJWW	VKAM28L71
21KLAN13MPX	P1D-S050MS-0730	D41VW020D5VJWWI3N	VKAM28LCF
21KLAN13RVX	P1D-S050MS-0730	D41VW020D5VTWW	VKAM28LVITCF
21KLAW10EVX	P1D-S050MS-0750	D41VW020H1NJW	VKAM30S71
21KLAW10MPN	P1D-S050MS-0750	D41VW020H1NJWI1N	VKAM30SCF
21KLAW10MPX	P1D-S050MS-0800	D41VW020H1NJWI1N3R	VKAM30SVITCF
21KLAW10RVX	P1D-S050MS-0800	D41VW020H1NJWI4N3EXG095	VKAM35L71
21KLAW13EVX	P1D-S050MS-0800C1NNN	D41VW020H2NJW	VKAM35LCF
21KLAW13MPN	P1D-S050MS-0800C1NNN	D41VW020H2NJWI4N	VKAM35LVITCF
21KLAW13MPX	P1D-S050MS-0820	D41VW020H2NUW	VKAM38S71
21KLAW13MVN	P1D-S050MS-0820	D41VW020H4NJEE	VKAM38SCF
21KLAW13RVX	P1D-S050MS-0850	D41VW020H4NJW	VKAM38SVITCF
21KLAW17EVX	P1D-S050MS-0850	D41VW020H5NJW	VKAM42L71
21KLAW17MPN	P1D-S050MS-0850NG000	D41VW020H6NJW	VKAM42LCF
21KLAW17MPX	P1D-S050MS-0850NG000	D41VW021C1NJW	VKAM42LVITCF
21KLAW17RVX	P1D-S050MS-0860	D41VW021C2NJW	VL10/05
21KLIM12MPX	P1D-S050MS-0860	D41VW021C2NJW3K	VL17/10
21KLIM14MPN	P1D-S050MS-0890	D41VW021C4NGW	VL17/10S
21KLIM14MPX	P1D-S050MS-0890	D41VW021C4NJW	VL21/13
21KLIN13MPX	P1D-S050MS-0900	D41VW021C4NTW	VL26/13AB4
21KLIW10EVX	P1D-S050MS-0900	D41VW022C2NJWTI6N	VL26/13AB8
21KLIW10MPN	P1D-S050MS-0950	D41VW022E5NJW	VL26/13AR4
21KLIW10MPX	P1D-S050MS-0950	D41VW023B4NJW3R	VL26/13AR8
21KLIW10RVX	P1D-S050MS-0950C1NNN	D41VW026B2NJW	VL33/17AB4
21KLIW13EVX	P1D-S050MS-0950C1NNN	D41VW026B2NJWTI2N	VL33/17AB6
21KLIW13MEXS	P1D-S050MS-1000	D41VW026B4NJW	VL33/17AB8
21KLIW13MPN	P1D-S050MS-1000	D41VW026B4NJWTI2N	VL33/17AR6
21KLIW13MPX	P1D-S050MS-1050	D41VW026B4NJWTI5N	VL33/17AR8
21KLIW13MVN	P1D-S050MS-1050	D41VW026B5NJWTI5N	VM025A06VG
21KLIW13RVX	P1D-S050MS-1100	D41VW026H1NJWTI4N	VM025A06VGX825
21KLIW17EKX	P1D-S050MS-1100	D41VW026H4NJW	VM025A06VGZ
21KLIW17EVX	P1D-S050MS-1100NG405	D41VW030B1NJWX729	VM025K06VG
21KLIW17MPN	P1D-S050MS-1100NG405	D41VW030B2NJW	VM064A06VG
21KLIW17MPNS	P1D-S050MS-1150	D41VW030B2NJW3A	VM064A06VGX825
21KLIW17MPX	P1D-S050MS-1150	D41VW030B5NJW	VM064A06VGZ
21KLKK06MPN	P1D-S050MS-1200	D41VW030B6NJW	VM064A10VM
21KLKK06MPX	P1D-S050MS-1200	D41VW030D2NJWI3N	VM064A10VMX825
21KLKK08MPN	P1D-S050MS-1300	D41VW030H2NUW	VM064A10VMZ
21KLKK08MPX	P1D-S050MS-1300	D41VW030H6NJW	VM064K06VG
21KLKO06EVX	P1D-S050MS-1500	D41VW030H6VJW3A	VM125A10VM
21KLKO06MPN	P1D-S050MS-1500	D41VW031C4NJW3FX591	VM125A10VM-65
21KLKO06MPX	P1D-S050MS-1750	D41VW034C2VJW	VM125A10VMX825
21KLKO06RVX	P1D-S050MS-1750	D41VW034C4NJW	VM125A10VMZ
21KLKO08EEX	P1D-S050MS-1900	D41VW035C1NGW	VM160A06VG
21KLKO08EVX	P1D-S050MS-1900	D41VW043E2NJDTJI5N5	VM160A06VGX825
21KLKO08MEX	P1D-S050MS-2000	D41VW043E2NJWI5N	VM160A06VGZ
21KLKO08MEXS	P1D-S050MS-2000	D41VW043E2NJWTI5N	VM160A10VM
21KLKO08MPN	P1D-S050MS-2250	D41VW043E5NJWI5N	VM160K06VG
21KLKO08MPX	P1D-S050MS-2250	D41VW049B1NJW	VM210A06VG
21KLKO08MVN	P1D-S050MS-2800	D41VW059C2NUW	VM210A06VGZ

21KLKO08REX	P1D-S050MS-2800	D41VW073K2NJWI4N	VM210A10VM
21KLKO08RVX	P1D-S050QR-0080	D41VW073K2NJWTI4N	VM210A10VMX825
21KLKS06EVX	P1D-S050QR-0080	D41VW073K5NJWTI4N	VM210A10VMZ
21KLKS06MEX	P1D-S050SR-0425	D41VW080C1NJW	VM210K06VG
21KLKS06MPN	P1D-S050SR-0425	D41VW081C1NJWTI6N	VM350A06VG
21KLKS06MPNS	P1D-S050VS-0100	D41VW081C4NJW	VM350A06VGZ
21KLKS06MPX	P1D-S050VS-0100	D41VW081C4NJW3A	VMY030K06NV1P
21KLKS06RVX	P1D-S050VS-0100	D41VW081C4NTW3A	VMY030K06TV1P
21KLKS08MPN	P1D-S050VS-0100	D41VW081C5NJWC121210	VMY030L06NV1P
21KLKS08MPX	P1D-S050VS-1100	D41VW082C1NJW	VMY064A06NV1P
21KLKS08RVX	P1D-S050VS-1100	D41VW082C4NJW	VMY064A06TV1P
21KLTF04MPN	P1D-S050WS-0425	D41VW082C4NJW3A	VMY064A10V1P
21KLTF04MPX	P1D-S050WS-0425	D41VW101B1NJW	VMY064H06TV1P
21KLTF06EVX	P1D-S063AS-0160	D41VW101B2NJW	VMY064H10V1P
21KLTF06MPN	P1D-S063AS-0160	D41VW101B2NJW3D	VMY064K06NV1P
21KLTF06MPX	P1D-S063AS-0250	D41VW101B4NJDLJ53R	VMY064K06NV1PXG056
21KLTF06MVN	P1D-S063AS-0250	D41VW101B6NJWC060615	VMY064K06TV1P
21KLTF06RVX	P1D-S063AS-0500	D41VW103C4NJW	VMY064K10V1P
21KLTF08EVX	P1D-S063AS-0500	D41VW103C4NJWI4NX129	VMY064L06NV1P
21KLTF08MPN	P1D-S063AS-0800	D41VW103C4NJWI5NX129	VMY064L06NV1PXG135
21KLTF08MPX	P1D-S063AS-0800	D41VW207K2NJWTI5N	VMY064L06TV1P
21KLTF08MVN	P1D-S063AS-0830	D41VW207K5NJWI2N	VMY064L10N1P
21KLTF08RVX	P1D-S063AS-0830	D41VW214C1NJW	VMY100K06NV1P
21KLTF09EVX	P1D-S063AS-1000	D41VW218K1NJWTI4N3C	VMY100K06TV1P
21KLTF09MPN	P1D-S063AS-1000	D41VWR31C1NJW3MX591	VMY100K10V1P
21KLTF09MPX	P1D-S063DS-0050	D41VWR31C1VJW3MX591	VMY100L06NN1P
21KLTF09RVX	P1D-S063DS-0050	D41VWR31C1VUW3MX591	VMY100L06NV1P
21KLTF10EVX	P1D-S063FS-0025	D41VWR31C2NJW3MX591	VMY100L06TV1P
21KLTF10MPN	P1D-S063FS-0025	D41VWZ81C5NJW	VMY100L10N1P
21KLTF10MPX	P1D-S063FS-0040	D42LMSX	VMY160A06NV1P
21KLTF10MVN	P1D-S063FS-0040	D46FHB81G2NB20	VMY160A06TV1P
21KLTP06MPX	P1D-S063FS-0200	D46FHE01B5NB00	VMY160A10N1P
21KLTS04MPX	P1D-S063FS-0200	D46FHE01D2NB00	VMY160A10V1P
21KLTS05MPX	P1D-S063FS-0250	D46FHE01D5NB00	VMY160H06TV1P
21KLTS06MPN	P1D-S063FS-0250	D46FHE01D5NB20	VMY160H10V1P
21KLTS06MPX	P1D-S063FS-0300	D46FHE01F1NB00	VMY160K06NN1P
21KLTS08MPX	P1D-S063FS-0300	D46FHE01F2NB00	VMY160K06NV1P
21KLTS08RVX	P1D-S063MC-0060	D46FHE01F4NB00	VMY160K06TV1P
21KLTS10MPX	P1D-S063MC-0060	D46FHE01F5NB00	VMY160K10N1P
21KRAN13MPX	P1D-S063MC-0080	D46FHE01G1NB20	VMY160K10NV1P
21KRAW13MPX	P1D-S063MC-0080	D46FHE01G2NB00	VMY160L06NN1PXG056
21KRIN13MPX	P1D-S063MC-0080N1NNN	D46FHE01G2NB20	VMY160L06NV1P
21KRTF06MPX	P1D-S063MC-0080N1NNN	D46FHE01G4NB00	VMY160L06TN1P
21KRTF08MPX	P1D-S063MC-0100	D46FHE01G5NB00	VMY160L06TV1P
21KRTF10MPX	P1D-S063MC-0100	D46FHE52B2NB00	VMY160L10N1P
21KSAD14MPX	P1D-S063MC-0160	D46FHE52B5NB00	VMY160L10V1P
21KSAN10MPX	P1D-S063MC-0160	D46FHE52F2NB00	VMY210A06TV1P
21KSAN13MPX	P1D-S063MC-0175	D46FHE52F4NB00	VMY210A10V1P
21KSAW10MPN	P1D-S063MC-0175	D46FHE52F5NB00	VMY210H06TV1P
21KSAW10MPNS_03	P1D-S063MC-0200	D49V001C2N	VMY210H10V1P
21KSAW10MPX	P1D-S063MC-0200	D49V001C4N	VMY210K06NN1PXG056
21KSAW13MPN	P1D-S063MC-0250	D49V001C5N	VMY210K06NV1P
21KSAW13MPNS	P1D-S063MC-0250	D49V004C4N	VMY210K06TV1P

21KSAW13MPX	P1D-S063MC-0320	D49V004C4N3F	VMY210K10N1P
21KSAW17MPN	P1D-S063MC-0320	D49V009C5N3F	VMY210L06NV1P
21KSAW17MPX	P1D-S063MC-0400	D49V011C4NC080815	VMY210L06TV1P
21KSIM14MPX	P1D-S063MC-0400	D49V015C2N	VMY210L10N1P
21KSIN10MPX	P1D-S063MC-0650	D49V030H5N	VMY210L10V1P
21KSIN13MPX	P1D-S063MC-0650	D49V043E5NI5N	VMY315A06TV1P
21KSIW10MPN	P1D-S063MC-0700	D49V081C4N	VMY315A10V1P
21KSIW10MPX	P1D-S063MC-0700	D49V081C4N3F	VMY315H06TV1P
21KSIW13MPN	P1D-S063MM-0100	D49V082C4N3F	VMY315H10V1P
21KSIW13MPX	P1D-S063MM-0100	D4A020N	VMY315K06NN1PXG056
21KSIW17MPN	P1D-S063MS-0010	D4A020N181	VMY315K06NV1P
21KSIW17MPX	P1D-S063MS-0010	D4A040NMK2	VMY315K06TV1P
21KSKK08MPX	P1D-S063MS-0010ASMNN	D4A055NMK2	VMY315K10N1P
21KSKO06MPN	P1D-S063MS-0010ASMNN	D4BRAB12-1/2	VMY315K10V1P
21KSKO06MPX	P1D-S063MS-0015	D4BRAB12-3/8	VMY315L06NV1P
21KSKO08MPN	P1D-S063MS-0015	D4BRAB16-1/2	VMY315L06TV1P
21KSKO08MPX	P1D-S063MS-0020	D4L004C5N	VMY315L06TV1PX912
21KSKS06MPN	P1D-S063MS-0020	D4L004N5N	VMY315L10N1P
21KSKS06MPX	P1D-S063MS-0020ASMNN	D4L009N5N	VMY315L10V1P
21KSKS08MPC	P1D-S063MS-0020ASMNN	D4L205C2N	VO233
21KSKS08MPN	P1D-S063MS-0025	D4LB001C5N	VO233
21KSKS08MPX	P1D-S063MS-0025	D4LB004C5N	VOMO04LLSA2X
21KSTF04MPN	P1D-S063MS-0025ASMNN	D4LB004K5N	VOMO04LLX
21KSTF04MPX	P1D-S063MS-0025ASMNN	D4LB020D5N	VOMO06LLX
21KSTF05MPN	P1D-S063MS-0025N1NNN	D4P001C2N	VOMO06LX
21KSTF05MPX	P1D-S063MS-0025N1NNN	D4P004C2N	VOMO06SX
21KSTF06MPN	P1D-S063MS-0030	D4P009C2N	VOMO08LLX
21KSTF06MPNS	P1D-S063MS-0030	D4P011C2N	VOMO08LX
21KSTF06MPNS_01	P1D-S063MS-0035	D4P020B2N	VOMO08SX
21KSTF06MPX	P1D-S063MS-0035	D4P020D2N	VOMO10LLX
21KSTF08MPN	P1D-S063MS-0040C5NNN	D4P081C2N	VOMO10LX
21KSTF08MPNS	P1D-S063MS-0040C5NNN	D4P218D2N	VOMO10SX
21KSTF08MPX	P1D-S063MS-0040CXNNN	D4S03-32111409G0QB1	VOMO12LLX
21KSTF09MPN	P1D-S063MS-0040CXNNN	D4S03-3A514409G0QB1	VOMO12LX
21KSTF09MPX	P1D-S063MS-0050C5NNN	D4S03-3B534409G0QB1	VOMO12SX
21KSTF10MPN	P1D-S063MS-0050C5NNN	D4S03-61234211G0QB1LH	VOMO14SX
21KSTF10MPX	P1D-S063MS-0050C6NNN	D4S03-91234411W31B1	VOMO15LX
21KSTS04MPN	P1D-S063MS-0050C6NNN	D4S06-321114B1	VOMO16SX
21KSTS04MPX	P1D-S063MS-0050NDNNN	D4S06-323342B1	VOMO18LX
21KSTS05MPX	P1D-S063MS-0050NDNNN	D4S06-3233A2B1	VOMO20SX
21KSTS06MPX	P1D-S063MS-0060	D4S06-3A534511G0QB1	VOMO22LX
21-P-451	P1D-S063MS-0060	D4S06-3B534409W31B1	VOMO25SX
21-P-468	P1D-S063MS-0065	D4S06-61234611G0QB1	VOMO28LX
21-P-480	P1D-S063MS-0065	D4S06-61234611G0QB1027	VOMO30SX
21-P-513	P1D-S063MS-0070	D4S06-9123A2BCG0QB1	VOMO35LX
21-P-515	P1D-S063MS-0070	D4S06-91634209G0QB1	VOMO38SX
21-P-517	P1D-S063MS-0075	D4S06-9213A4BAB1031	VOMO42LX
21-P-524	P1D-S063MS-0075	D4S06-92C345B1	VOX21XXXRXX
21-P-541	P1D-S063MS-0075C5NNN	D4S06-92N3A2B1053	VOX25XXXRXX_02
21-P-544	P1D-S063MS-0075C5NNN	D4S06-9A53A2BEG0QB1013	VP500P16
21-P-546	P1D-S063MS-0080	D4S06-9A53A4BEG0QB1	VPHC12-12F
21-P-625	P1D-S063MS-0080	D4S06-9A53A4BEW31B1013	VPHC6-6F
21-P-628	P1D-S063MS-0080NDNNN	D4S06-9C2345B1	VPHN16-16FV

21-P-703	P1D-S063MS-0080NDNNN	D4S06-9C23A6BKG0QB1013	VPLSK2
21-P-707	P1D-S063MS-0085	D4S06-9C23C2CDG0QB1	VQB12-OTX-4+B00
21-P-748	P1D-S063MS-0085	D4S06-9C23C6DBG0QB1	VQB12-OTX-4+B00
21SBAD10MPN	P1D-S063MS-0100	D4S06-D123A2BHW31B1	VQB12-OX-5
21SBAD10MPX	P1D-S063MS-0100	D4S06-D233B3B1	VQB12-OX-5
21SBAD10MVN	P1D-S063MS-0100CENNN	D4S10-31111409G0QB1	VQB12-Q-O-5
21SBAD10MVN0	P1D-S063MS-0100CENNN	D4S10-31514111G0QB1	VQB12-Q-O-5
21SBAD10MVN3	P1D-S063MS-0100NSNNN	D4S10-31X346B1012	VQB12-Q-OX-5
21SBAD12MPN	P1D-S063MS-0100NSNNN	D4S10-321143B1	VQB12-Q-OX-5
21SBAD12MPX	P1D-S063MS-0100NUNNN	D4S10-32234411W52A1	VQB22-O-5
21SBAD14MPN	P1D-S063MS-0100NUNNN	D4S10-3A514111G0QB1	VQB22-O-5
21SBAD14MPX	P1D-S063MS-0100SNNNN	D4S10-3B534611G0QB1	VQB22-Q-O-5
21SBAM14RVX	P1D-S063MS-0100SNNNN	D4S10-3B53B611G0QB1	VQB22-Q-O-5
21SBAN10MEN	P1D-S063MS-0110C5NNN	D4S10-3C2145CDG0QB1	VQB42-O-5
21SBAN10MPN	P1D-S063MS-0110C5NNN	D4S10-3C2341CDG0QB1	VQB42-O-5
21SBAN10MPX	P1D-S063MS-0120	D4S10-3D2344CDG0QB1	VQB42-Q-O-5
21SBAN10MVN	P1D-S063MS-0120	D4S10-3DC3B4B1	VQB42-Q-O-5
21SBAN10RVX	P1D-S063MS-0125	D4S10-923342B1	VR01 L1 00
21SBAN13EEX	P1D-S063MS-0125	D4S10-92634411G0QB1	VR01 L3 00
21SBAN13EVX	P1D-S063MS-0125KWNNN	D4S10-9A23C211G0QB1	VR02 L8 00
21SBAN13MPN	P1D-S063MS-0125KWNNN	D4S10-9A534611G0QB1	VR04 00 08
21SBAN13MPX	P1D-S063MS-0130	D4S10-9A53A2BEG0QB1013	VR06
21SBAN13RVX	P1D-S063MS-0130	D4S10-9B534411G0QB1	VR06-320
21SBAW10DPX	P1D-S063MS-0140	D4S10-9B53B211G0QB1	VR06-600
21SBAW10DPXB	P1D-S063MS-0140	D4S10-9C2146DBG0QB1	VR12
21SBAW10DPXG	P1D-S063MS-0145	D4S10-9C2344CDG0QB1	VR12AS
21SBAW10DPXR	P1D-S063MS-0145	D4S10-9C23C2CDG0QB1	VRP-95-776
21SBAW10DPXY	P1D-S063MS-0150	D4S10-9G1346CAB1	VRP-95-776
21SBAW10EEX	P1D-S063MS-0150	D4S10-D11344B1	VRP-95-780
21SBAW10EVX	P1D-S063MS-0150C5NNN	D4S10-D1234409W30B1	VRP-95-780
21SBAW10FVX	P1D-S063MS-0150C5NNN	D50002R	VRP-95-781
21SBAW10FVXB	P1D-S063MS-0160	D50002R	VRP-95-781
21SBAW10FVXG	P1D-S063MS-0160	D50003R	VRP-95-783
21SBAW10FVXR	P1D-S063MS-0170NNCNN	D50003R	VRP-95-783
21SBAW10FVXY	P1D-S063MS-0170NNCNN	D50004R	VRP-95-785
21SBAW10MEN	P1D-S063MS-0175	D50004R	VRP-95-785
21SBAW10MPN	P1D-S063MS-0175	D500B13000000	VRP-96-925
21SBAW10MPN0	P1D-S063MS-0180	D50102R	VRP-96-925
21SBAW10MPN6	P1D-S063MS-0180	D50102R	VRS063-186FRR
21SBAW10MPN8	P1D-S063MS-0190	D50103R	VRS063-186FRR
21SBAW10MPNS	P1D-S063MS-0190	D50103R	VRS080-366FNN
21SBAW10MPX	P1D-S063MS-0200	D51DC071D	VRS080-366FNN
21SBAW10MPX0	P1D-S063MS-0200	D51DC071VD	VRSM040-186FRR
21SBAW10MPX6	P1D-S063MS-0200NUNNN	D51DC071-Z5353	VRSM040-186FRR
21SBAW10MPX8	P1D-S063MS-0200NUNNN	D51DC101D	VRSM050-186FRR
21SBAW10MPXS_06	P1D-S063MS-0206	D51VP071C	VRSM050-186FRR
21SBAW10MVN	P1D-S063MS-0206	D51VP071VC	VRSM063-056FRR
21SBAW10MVNS	P1D-S063MS-0210	D51VP101D	VRSM063-056FRR
21SBAW10MVX	P1D-S063MS-0210	D51VP101VD	VRSM080-186FNN
21SBAW10MVXS_01	P1D-S063MS-0220	D51VP911A	VRSM080-186FNN
21SBAW10MXX	P1D-S063MS-0220	D51ZP071C	VRSM100-186FRR11
21SBAW10REX	P1D-S063MS-0230	D5A040NMK2	VRSM100-186FRR11
21SBAW10RKX	P1D-S063MS-0230	D5S08-351141B1	VS016-500-052

21SBAW10RVX	P1D-S063MS-0250	D5S08-51414209G0QB1	VS016-500-052
21SBAW10RVX0	P1D-S063MS-0250	D5S08-51414211G0QB1	VS025A06VG
21SBAW10RVX6	P1D-S063MS-0260	D5S08-51414409G0QB1	VS025A06VGZ
21SBAW10RVX8	P1D-S063MS-0260	D5S08-536344CDG0QB1	VS025K06VG
21SBAW13DPX	P1D-S063MS-0280	D5S08-5363A4BKG0QB1	VS064A06VG
21SBAW13DPXB	P1D-S063MS-0280	D5S08-7163A2BEG0QB1	VS064A06VGZ
21SBAW13DPXG	P1D-S063MS-0300	D5S08-736343DDG0QB1	VS111-000
21SBAW13DPXR	P1D-S063MS-0300	D5S10-51414209G0QB1	VS111-100
21SBAW13DPXY	P1D-S063MS-0310	D5S10-82634411GARB5	VS111-200
21SBAW13DVX	P1D-S063MS-0310	D5S10-82634411W30B1	VS111-800
21SBAW13EEX	P1D-S063MS-0320	D5S12-51611409G0QB1	VS160A06VG
21SBAW13EVX	P1D-S063MS-0320	D5S12-536343DDG0QB1XG158	VS160A06VGZ
21SBAW13FEX	P1D-S063MS-0330	D600S	VS160A06VM
21SBAW13FVX	P1D-S063MS-0330	D600SNC	VS210A06VG
21SBAW13FVXB	P1D-S063MS-0350	D6RMS18.B086	VS210A06VGZ
21SBAW13FVXG	P1D-S063MS-0350	D6RMS7.B166	VS210K06VG
21SBAW13FVXR	P1D-S063MS-0350N1NNN	D701-12	VS350A06VC
21SBAW13FVXY	P1D-S063MS-0350N1NNN	D705-22-01	VS350A06VG
21SBAW13MEN	P1D-S063MS-0355	D713-11	VS350A06VGZ
21SBAW13MEX	P1D-S063MS-0355	D713-21-01	VS350A06VM
21SBAW13MPD	P1D-S063MS-0370	D713-22-01	VSA025L06B
21SBAW13MPN	P1D-S063MS-0370	D713A-22-01	VSA064A0623
21SBAW13MPN0	P1D-S063MS-0400	D713C-11	VSA064A0623Z
21SBAW13MPN6	P1D-S063MS-0400	D716A-21-01	VSA064A1023
21SBAW13MPN8	P1D-S063MS-0400N6NNN	D716A-22-01	VSA064AG1/223
21SBAW13MPNS	P1D-S063MS-0400N6NNN	D730A-23-01	VSA064AG1/223Z
21SBAW13MPX	P1D-S063MS-0410	D736-22-02	VSA064AG1/423
21SBAW13MPX0	P1D-S063MS-0410	D736A-23-02	VSA064AG1/423Z
21SBAW13MPX3	P1D-S063MS-0440	D736D-22-01	VSA160A0623
21SBAW13MPX6	P1D-S063MS-0440	D737-13	VSA160A0623Z
21SBAW13MPX8	P1D-S063MS-0445	D737-23-01	VSA160A1023
21SBAW13MVN	P1D-S063MS-0445	D737B-22-01	VSA160AG1/223
21SBAW13MVX	P1D-S063MS-0450	D738-23-02	VSA160AG1/223Z
21SBAW13REX	P1D-S063MS-0450	D743-11	VSA160AG1/423
21SBAW13RVX	P1D-S063MS-0475	D743-21-01	VSA160AG1/423Z
21SBAW13RVX0	P1D-S063MS-0475	D743-22-01	VSA315A0623
21SBAW17EVX	P1D-S063MS-0480	D746A-22-01	VSA315A0623Z
21SBAW17MEX	P1D-S063MS-0480	D754-22-01	VSA315A1023
21SBAW17MPN	P1D-S063MS-0490	D754C-22-01	VSA315AG1/223
21SBAW17MPX	P1D-S063MS-0490	D760-23-01	VSA315AG1/223Z
21SBAW17MVN	P1D-S063MS-0495	D761-23-01	VSA315AG1/423
21SBAW17RKX	P1D-S063MS-0495	D770-11	VSA315AG1/423Z
21SBAW17RVX	P1D-S063MS-0500	D771-11	VSCH14X1CFX
21SBIM10MPX	P1D-S063MS-0500	D772-11	VSCH16X1CFX
21SBIM10MVN	P1D-S063MS-0520	D773-11	VSCH18X1CFX
21SBIM10RVX	P1D-S063MS-0520	D773-21-01	VSCH22X1.5CFX
21SBIM12MPN	P1D-S063MS-0550	D773B-11	VSCH24X1.5CFX
21SBIM12MPX	P1D-S063MS-0550	D774-11	VSCH26X1.5CFX
21SBIM12RVX	P1D-S063MS-0550NG000	D774A-11	VSCH28X1.5CFX
21SBIM14MPN	P1D-S063MS-0550NG000	D774B-11	VSCH32X1.5CFX
21SBIM14MPX	P1D-S063MS-0560	D81FEB31HC4NS00XG183	VSCH35X1.5CFX
21SBIM14MVX	P1D-S063MS-0560	D81FEE88HC2NK00	VSCH40X1.5CFX
21SBIM14RVX	P1D-S063MS-0580	D81FHA31E1NB00	VSCH50X1.5CFX

21SBIN10EVX	P1D-S063MS-0580	D81FHA31E4VB00	VSG16-501-101
21SBIN10MPN	P1D-S063MS-0600	D81FHA31H1NB00	VSG16-501-101
21SBIN10MPX	P1D-S063MS-0600	D81FHA31H2NB00	VSG16-501-102
21SBIN13MPX	P1D-S063MS-0650	D81FHA31H2NB08	VSG16-501-102
21SBIW10DEX	P1D-S063MS-0650	D81FHA31H5NB00	V-SPRD510P20N
21SBIW10DPX	P1D-S063MS-0670	D81FHA32F1NB00	V-SPRE510P20U
21SBIW10DPXB	P1D-S063MS-0670	D81FHA61H2NB00	V-SPZBE1010E16N
21SBIW10DPXG	P1D-S063MS-0700	D81FHB11H4NB00	V-SPZBE1010E25L
21SBIW10DPXR	P1D-S063MS-0700	D81FHB12H1NE00	V-SPZBE1010E25N
21SBIW10DPXY	P1D-S063MS-0700NG000	D81FHB12H4NB00	V-SPZBE1010E25S
21SBIW10EVX	P1D-S063MS-0700NG000	D81FHB12H4NE00	V-SPZBE1010E32N
21SBIW10FVX	P1D-S063MS-0720	D81FHB14H1NB00	V-SPZBE1010E32S
21SBIW10FVXB	P1D-S063MS-0720	D81FHB31E1NB00	V-SPZBE1010E32U
21SBIW10FVXR	P1D-S063MS-0750	D81FHB31E2NB00	VSS10/M6
21SBIW10FVXY	P1D-S063MS-0750	D81FHB31E4NB00	VSS12/M6
21SBIW10MED	P1D-S063MS-0800	D81FHB31F2NB08	VSS16/M8
21SBIW10MEN	P1D-S063MS-0800	D81FHB31F5NB08	VSS6/M3
21SBIW10MEX	P1D-S063MS-0800NG000	D81FHB31H1NB00	VSS8/M4
21SBIW10MPN	P1D-S063MS-0800NG000	D81FHB31H2NB00	V-SSRB080E06
21SBIW10MPN0	P1D-S063MS-0830	D81FHB31H2NE00X807	VSTI1/2ED
21SBIW10MPN3	P1D-S063MS-0830	D81FHB31H2NE08	VSTI1/2ED71
21SBIW10MPN6	P1D-S063MS-0900	D81FHB31H4NB00	VSTI1/2EDCF
21SBIW10MPN8	P1D-S063MS-0900	D81FHB31H5NB00	VSTI1/2EDEPDMCF
21SBIW10MPNS_01	P1D-S063MS-0920	D81FHB32E1NB00	VSTI1/2EDNBR71
21SBIW10MPX	P1D-S063MS-0920	D81FHB32E2NE00	VSTI1/2EDVITCF
21SBIW10MPX0	P1D-S063MS-0970	D81FHB32E4NB00	VSTI1/4ED4539
21SBIW10MPX3	P1D-S063MS-0970	D81FHB32E5VS00	VSTI1/4ED71
21SBIW10MPX6	P1D-S063MS-0982NNN6N	D81FHB32F1NB00	VSTI1/4EDCF
21SBIW10MPX8	P1D-S063MS-0982NNN6N	D81FHB32F2NB00	VSTI1/4EDCFBP
21SBIW10MVN	P1D-S063MS-1000	D81FHB32F4NS00	VSTI1/4EDEPDMCF
21SBIW10MVN0	P1D-S063MS-1000	D81FHB32F5NB00	VSTI1/4EDMS
21SBIW10MVN6	P1D-S063MS-1000NG000	D81FHB32H1NB00	VSTI1/4EDNBR71
21SBIW10MVN8	P1D-S063MS-1000NG000	D81FHB32H1NE00	VSTI1/4EDVITCF
21SBIW10MVX	P1D-S063MS-1025	D81FHB32H2NB00	VSTI1/4EDVITCFBP
21SBIW10REX	P1D-S063MS-1025	D81FHB32H4NB00	VSTI1/8ED
21SBIW10RVX	P1D-S063MS-1050	D81FHB32H4NS00	VSTI1/8ED71
21SBIW13DPX	P1D-S063MS-1050	D81FHB61E1NB00	VSTI1/8EDCF
21SBIW13DPXB	P1D-S063MS-1060	D81FHB61F2NB00	VSTI1/8EDCFX
21SBIW13DPXG	P1D-S063MS-1060	D81FHB61H1NB00	VSTI1/8EDMS
21SBIW13DPXR	P1D-S063MS-1100NG000	D81FHB61H2NB00	VSTI1/8EDNBR71
21SBIW13DPXY	P1D-S063MS-1100NG000	D81FHB61H2NE00	VSTI1/8EDVITCF
21SBIW13EEX	P1D-S063MS-1250	D81FHB61H4VB00	VSTI10X1ED71
21SBIW13EVX	P1D-S063MS-1250	D81FHB63F4VB00	VSTI10X1EDCF
21SBIW13EVXS	P1D-S063MS-1300	D81FHE01E1NB00	VSTI10X1EDEPDMCF
21SBIW13FEX	P1D-S063MS-1300	D81FHE01E2NB00	VSTI10X1EDNBR71
21SBIW13FVX	P1D-S063MS-1350	D81FHE01E4NB00	VSTI10X1EDVITCF
21SBIW13FVXB	P1D-S063MS-1350	D81FHE01E5NB00	VSTI10X1OR71
21SBIW13FVXG	P1D-S063MS-1400	D81FHE01F1NE00	VSTI10X1ORCF
21SBIW13FVXR	P1D-S063MS-1400	D81FHE01F2NB00	VSTI10X1ORCFX
21SBIW13MEN	P1D-S063MS-1450	D81FHE01F2NE00X807	VSTI10X1ORVITCF
21SBIW13MEX	P1D-S063MS-1450	D81FHE01F4NB00	VSTI11/2-400EDCF
21SBIW13MPD	P1D-S063MS-2000	D81FHE01F4NS00	VSTI11/2ED
21SBIW13MPN	P1D-S063MS-2000	D81FHE01F4VB00	VSTI11/2ED71

21SBIW13MPNS	P1D-S063MS-2600	D81FHE01F5NB00	VSTI11/2EDCF
21SBIW13MPX	P1D-S063MS-2600	D81FHE01H1NB00	VSTI11/2EDVITCF
21SBIW13MPX0	P1D-S063QC-0160	D81FHE01H1NS00	VSTI11/4-400EDCF
21SBIW13MPX6	P1D-S063QC-0160	D81FHE01H1VB00	VSTI11/4ED
21SBIW13MPX8	P1D-S063QC-0275NG000	D81FHE01H2NB00	VSTI11/4ED71
21SBIW13MPXS	P1D-S063QC-0275NG000	D81FHE01H2NB08	VSTI11/4EDCF
21SBIW13MVN	P1D-S063WS-0160	D81FHE01H4NB00	VSTI11/4EDEPDMCF
21SBIW13MVX	P1D-S063WS-0160	D81FHE01H4NS00	VSTI11/4EDVITCF
21SBIW13REX	P1D-S063WS-0260NNVNN	D81FHE01H4VB00	VSTI12X1.5ED71
21SBIW13RKX	P1D-S063WS-0260NNVNN	D81FHE01H5NB00	VSTI12X1.5EDCF
21SBIW13RVX	P1D-S080/S60422	D81FHE01H5NB08	VSTI12X1.5EDCFOB2
21SBIW13RVXS_02	P1D-S080/S60422	D81FHE02E1NB00	VSTI12X1.5EDNBR71
21SBIW17EVX	P1D-S080/S60431	D81FHE02E2NB00	VSTI12X1.5EDVITCF
21SBIW17MEN	P1D-S080/S60431	D81FHE02E4NB00	VSTI12X1.5OR71
21SBIW17MPN	P1D-S080AS-0460	D81FHE02E4NS00	VSTI12X1.5ORCF
21SBIW17MPX	P1D-S080AS-0460	D81FHE02E5NB00	VSTI12X1.5ORCFX
21SBIW17MVN	P1D-S080AS-0750	D81FHE02F1NB00	VSTI12X1.5ORVITCF
21SBIW17MVX	P1D-S080AS-0750	D81FHE02F2NB00	VSTI14X1.5ED71
21SBIW17RKX	P1D-S080AS-0830NG235	D81FHE02H1VB00	VSTI14X1.5EDCF
21SBIW17RVX	P1D-S080AS-0830NG235	D81FHE02H1VE00	VSTI14X1.5EDCFXBP
21SBKK06MPN	P1D-S080AS-0850	D81FHE02H2NB00	VSTI14X1.5EDVITCF
21SBKK06MPX	P1D-S080AS-0850	D81FHE02H2NS00	VSTI14X1.5OR71
21SBKK06MVN	P1D-S080AS-0890	D81FHE02H4NB00	VSTI14X1.5ORCF
21SBKK08MPN	P1D-S080AS-0890	D81FHE02H4NS00	VSTI14X1.5ORCFX
21SBKK08MPX	P1D-S080DS-0080	D81FHE02H4VB00	VSTI14X1.5ORHNBRCF
21SBKK08REX	P1D-S080DS-0080	D81FHE02H5NB00	VSTI14X1.5ORVITCF
21SBKK08RVX	P1D-S080FS-0050	D81FHE52E1NB00	VSTI16X1.5ED71
21SBKO06DEX	P1D-S080FS-0050	D81FHE52E2NB00	VSTI16X1.5EDCF
21SBKO06DPX	P1D-S080FS-0063	D81FHE52E4NB00	VSTI16X1.5EDVITCF
21SBKO06DPXB	P1D-S080FS-0063	D81FHE52F2VE00	VSTI16X1.5OR71
21SBKO06DPXG	P1D-S080MC-0025	D81FHE52F5NB00	VSTI16X1.5ORCF
21SBKO06DPXR	P1D-S080MC-0025	D81FHE52H2NB00	VSTI16X1.5ORVITCF
21SBKO06DPXY	P1D-S080MC-0060	D81FHE52H4NB00	VSTI18X1.5ED71
21SBKO06EVX	P1D-S080MC-0060	D81FHE52H4VB00	VSTI18X1.5EDCF
21SBKO06FEX	P1D-S080MC-0080	D81FPA61HA2NK70	VSTI18X1.5EDNBR71
21SBKO06FVX	P1D-S080MC-0080	D81FPB32HC1NS00	VSTI18X1.5EDVITCF
21SBKO06FVXB	P1D-S080MC-0100	D81FPB61HB2NS70	VSTI18X1.5ORCF
21SBKO06FVXG	P1D-S080MC-0100	D81FPE52HA1NK00	VSTI18X1.5ORCFX
21SBKO06FVXR	P1D-S080MC-0150	D81FPE52HA2NK00	VSTI18X1.5ORVITCF
21SBKO06FVXY	P1D-S080MC-0150	D81FPE52HB2NK00	VSTI1ED
21SBKO06MEN	P1D-S080MC-0320	D81FPE52HB4NS70	VSTI1ED71
21SBKO06MEX	P1D-S080MC-0320	D81FSA31E1NLW0	VSTI1EDCF
21SBKO06MPN	P1D-S080MC-0600	D81FSA31E1NXW0	VSTI1EDCFBP
21SBKO06MPN0	P1D-S080MC-0600	D81FSA31E2NLW0	VSTI1EDEPDMCF
21SBKO06MPN6	P1D-S080MC-0650	D81FSA31E2NLW8	VSTI1EDNBR71
21SBKO06MPN8	P1D-S080MC-0650	D81FSA31E2NXW0	VSTI1EDVITCF
21SBKO06MPX	P1D-S080MC-1000	D81FSA32E1NXW0	VSTI20X1.5ED71
21SBKO06MVN	P1D-S080MC-1000	D81FSA32E1VXW0	VSTI20X1.5EDCF
21SBKO06MVX	P1D-S080MM-0480	D81FSA32E2NLW0	VSTI20X1.5EDVITCF
21SBKO06RKX	P1D-S080MM-0480	D81FSA32E2NXW0	VSTI22X1.5ED71
21SBKO06RVX	P1D-S080MS-0015	D81FSA32E4NXW0	VSTI22X1.5EDCF
21SBKO08DEX	P1D-S080MS-0015	D81FSA34E4NXW0	VSTI22X1.5EDVITCF
21SBKO08DEXY	P1D-S080MS-0015NNN6N	D81FSA37E1NXW0	VSTI22X1.5OR71

21SBKO08DPX	P1D-S080MS-0015NNN6N	D81FSA80E2NXW0	VSTI22X1.5ORCF
21SBKO08DPXB	P1D-S080MS-0020	D81FSA82E1NXW0	VSTI22X1.5ORCFX
21SBKO08DPXG	P1D-S080MS-0020	D81FSB12E4NXW0	VSTI22X1.5ORMSBP
21SBKO08DPXR	P1D-S080MS-0025	D81FSB31E1NLW0	VSTI22X1.5ORVITCF
21SBKO08DPXS	P1D-S080MS-0025	D81FSB31E1NXW0	VSTI24X1.5ED71
21SBKO08DPXY	P1D-S080MS-0030	D81FSB31E2NXW0	VSTI24X1.5EDVITCF
21SBKO08DVX	P1D-S080MS-0030	D81FSB31E4NXW0	VSTI26X1.5ED71
21SBKO08EVX	P1D-S080MS-0035	D81FSB31E4NXW8	VSTI26X1.5EDCF
21SBKO08FEX	P1D-S080MS-0035	D81FSB31E5NXW0	VSTI26X1.5EDVITCF
21SBKO08FVX	P1D-S080MS-0050	D81FSB31E5NXW8	VSTI26X1.5ORCF
21SBKO08FVXB	P1D-S080MS-0050	D81FSB32E1NXW0	VSTI26X1.5ORCFX
21SBKO08FVXG	P1D-S080MS-0050C5NNN	D81FSB32E2NLW8	VSTI27X2ED71
21SBKO08FVXR	P1D-S080MS-0050C5NNN	D81FSB32E2NXW0	VSTI27X2EDCF
21SBKO08FVXY	P1D-S080MS-0050NG150	D81FSB32E4NXW0	VSTI27X2EDVITCF
21SBKO08MEX	P1D-S080MS-0050NG150	D81FSB34E4NXW0	VSTI27X2ORCF
21SBKO08MPD	P1D-S080MS-0050RWNNN	D81FSB83E2NXW0	VSTI27X2ORCFX
21SBKO08MPN	P1D-S080MS-0050RWNNN	D81FSB83E4NXW0	VSTI27X2ORVITCF
21SBKO08MPNS_01	P1D-S080MS-0055	D81FSB88E2NXW0	VSTI2ED71
21SBKO08MPNS_02	P1D-S080MS-0055	D81FSE01E1NXW0	VSTI2EDCF
21SBKO08MPNS_03	P1D-S080MS-0057	D81FSE01E2NLW0	VSTI2EDVITCF
21SBKO08MPX	P1D-S080MS-0057	D81FSE01E2NLW0X726	VSTI3/4ED71
21SBKO08MPX0	P1D-S080MS-0060	D81FSE01E2NLW8	VSTI3/4EDCF
21SBKO08MPX3	P1D-S080MS-0060	D81FSE01E2NXW0	VSTI3/4EDCFBP
21SBKO08MPX6	P1D-S080MS-0060C5NNN	D81FSE01E2NXW8	VSTI3/4EDEPDMCF
21SBKO08MPX8	P1D-S080MS-0060C5NNN	D81FSE01E4NLW0	VSTI3/4EDNBR71
21SBKO08MPXS	P1D-S080MS-0070	D81FSE01E4NXW0	VSTI3/4EDVITCF
21SBKO08MVN	P1D-S080MS-0070	D81FSE01E5NLW0	VSTI3/8ED71
21SBKO08MVX	P1D-S080MS-0075	D81FSE01E5NXW0	VSTI3/8EDCF
21SBKO08REX	P1D-S080MS-0075	D81FSE01E5VLW0	VSTI3/8EDEPDMCF
21SBKO08RVX	P1D-S080MS-0080NG150	D81FSE02E1NXW0	VSTI3/8EDNBR71
21SBKP06FVX	P1D-S080MS-0080NG150	D81FSE02E2NLW0	VSTI3/8EDVITCF
21SBKP06FVXB	P1D-S080MS-0080NUNNN	D81FSE02E2NXW0	VSTI30X1.5EDCF
21SBKP08FVX	P1D-S080MS-0080NUNNN	D81FSE02E4NXW0	VSTI33X2ED71
21SBKP08FVXB	P1D-S080MS-0100	D81FSE02E5NLW0	VSTI33X2EDCF
21SBKP08FVXG	P1D-S080MS-0100	D81FSE06E1NXW0	VSTI33X2EDCFBP
21SBKP08FVXR	P1D-S080MS-0100NG000	D81FSE06E4NXW0	VSTI33X2EDNBR71
21SBKP08FVXY	P1D-S080MS-0100NG000	D81FSE07E2NXW0	VSTI33X2EDVITCF
21SBKS06DPX	P1D-S080MS-0100NNN6N	D81FSE85E2NXW0	VSTI33X2OR71
21SBKS06DPXB	P1D-S080MS-0100NNN6N	D81FSE85E2VXW0	VSTI33X2ORCF
21SBKS06DPXG	P1D-S080MS-0110	D81VW001A2VJW	VSTI33X2ORCFX
21SBKS06DPXR	P1D-S080MS-0110	D81VW001C1NJW	VSTI33X2ORVITCF
21SBKS06DPXY	P1D-S080MS-0110CG161	D81VW001C1NJW3B	VSTI42X1.5EDCF
21SBKS06EVX	P1D-S080MS-0110CG161	D81VW001C1NJW3F	VSTI42X2ED71
21SBKS06FVX	P1D-S080MS-0120	D81VW001C1NJW3R	VSTI42X2EDCF
21SBKS06FVXB	P1D-S080MS-0120	D81VW001C1NJWTI6N	VSTI42X2EDVITCF
21SBKS06FVXR	P1D-S080MS-0125	D81VW001C1NTW	VSTI42X2ORCF
21SBKS06MPN	P1D-S080MS-0125	D81VW001C1VJW3A	VSTI42X2ORVITCF
21SBKS06MPX	P1D-S080MS-0125NG000	D81VW001C1VKW	VSTI42X2ORVITCFBP
21SBKS06MVC	P1D-S080MS-0125NG000	D81VW001C2NJW	VSTI48X2ED71
21SBKS06MVN6	P1D-S080MS-0140	D81VW001C2NJW3A	VSTI48X2EDCF
21SBKS06RVX	P1D-S080MS-0140	D81VW001C2NJW3R	VSTI48X2EDVITCF
21SBKS08DEX	P1D-S080MS-0148	D81VW001C2NJWI2N	VSTI48X2ORCF
21SBKS08DEXY	P1D-S080MS-0148	D81VW001C2NJWI3N	VSTI48X2ORVITCF

21SBKS08DPX	P1D-S080MS-0148CHNNN	D81VW001C2NJWTI6N	VSTI8X1EDCF
21SBKS08DPXB	P1D-S080MS-0148CHNNN	D81VW001C2NJWW	VSTI8X1EDSA1CF
21SBKS08DPXG	P1D-S080MS-0150	D81VW001C2NYW3A	VSTI8X1EDVITCF
21SBKS08DPXR	P1D-S080MS-0150	D81VW001C4NJW	VSTI8X1OR71
21SBKS08DPXY	P1D-S080MS-0160	D81VW001C4NJW3A	VSTI8X1ORCF
21SBKS08DVX	P1D-S080MS-0160	D81VW001C4NJW3B	VSTI8X1ORVITCF
21SBKS08FVX	P1D-S080MS-0160NG000	D81VW001C4NJW3C	V-SVLA1006P07
21SBKS08FVXB	P1D-S080MS-0160NG000	D81VW001C4NJW3F	V-SVLB1046E25N
21SBKS08FVXG	P1D-S080MS-0170	D81VW001C4NJWI6N	V-SVLB1046E50S
21SBKS08FVXR	P1D-S080MS-0170	D81VW001C4NJWTI6N	V-SVLELR543P32T
21SBKS08FVXY	P1D-S080MS-0170C5NNN	D81VW001C4NTW	VT09XX12MXX
21SBKS08MPN	P1D-S080MS-0170C5NNN	D81VW001C4NYW	VT13XX15MXX
21SBKS08MPX	P1D-S080MS-0170NG000	D81VW001C4VJW	VT13XX30MXX
21SBKS08RVX	P1D-S080MS-0170NG000	D81VW001C5NJW	V-TDAE597P20LAFXG027
21SBTF04DPX	P1D-S080MS-0180	D81VW001C5NJWI6N	V-TELP497E70LAF
21SBTF04DPXB	P1D-S080MS-0180	D81VW001C6NJW3B	V-TELPV407P04LAF-100
21SBTF04DPXG	P1D-S080MS-0190	D81VW001E2NJW3C	V-TELRV407P04LAF-125
21SBTF04DPXR	P1D-S080MS-0190	D81VW001E2NJWI5N	VTK01/03
21SBTF04DPXY	P1D-S080MS-0195	D81VW001E5NJWI5N	VTK01/05
21SBTF04FVX	P1D-S080MS-0195	D81VW001F2NJW	VTL1404
21SBTF04FVXB	P1D-S080MS-0200	D81VW001K2NJWTI4N	VURG-4
21SBTF04FVXG	P1D-S080MS-0200	D81VW001K4NGWI1N3A	VW121-8937
21SBTF04FVXR	P1D-S080MS-0200NXNNN	D81VW001K4NJW	VW121-8938
21SBTF04FVXY	P1D-S080MS-0200NXNNN	D81VW002C2NGW	VW121-8939
21SBTF04MPN	P1D-S080MS-0210	D81VW002C2NJW	VW121-8940
21SBTF04MPX	P1D-S080MS-0210	D81VW002C2NJWI6N3C	VW39D1256-10-RL
21SBTF04MPX3	P1D-S080MS-0225	D81VW002C2NTW	VW39D1256-12-RL
21SBTF04MPX6	P1D-S080MS-0225	D81VW002C3NJW	VW39D1256-4-RL
21SBTF04MVN	P1D-S080MS-0230	D81VW002C3NYW3A	VW39D1256-6-RL
21SBTF04RVX	P1D-S080MS-0230	D81VW002C6NJW	VW39D1256-8-RL
21SBTF05MPN	P1D-S080MS-0250	D81VW002E2NJWTI5N	VXLPSU240
21SBTF05MPX	P1D-S080MS-0250	D81VW003C1NJW	VXLPSU960
21SBTF05MVN	P1D-S080MS-0250NG000	D81VW003C4NJW	VZ05
21SBTF05MVX	P1D-S080MS-0250NG000	D81VW003C4NJW3F	VZ05R
21SBTF06DEX	P1D-S080MS-0250NG000	D81VW004C1NJW	VZ08MS
21SBTF06DPX	P1D-S080MS-0250NG000	D81VW004C1NJW3A	VZ10
21SBTF06DPXB	P1D-S080MS-0250SSNNN	D81VW004C1NJWC999908	VZ10E
21SBTF06DPXG	P1D-S080MS-0250SSNNN	D81VW004C1NTW	VZ10MS
21SBTF06DPXR	P1D-S080MS-0250SSNNN	D81VW004C1NTW3A	VZ10MS_01
21SBTF06DPXY	P1D-S080MS-0250SSNNN	D81VW004C1NUW	VZ10N
21SBTF06EKX	P1D-S080MS-0255	D81VW004C1NYW	VZ10NS
21SBTF06EVX	P1D-S080MS-0255	D81VW004C2NJW	VZ10NS_01
21SBTF06FVX	P1D-S080MS-0280	D81VW004C4NJW	VZ10R
21SBTF06FVXB	P1D-S080MS-0280	D81VW004C4NJW1R	VZ12MS
21SBTF06FVXG	P1D-S080MS-0300	D81VW004C4NJW3A	VZ12MS_01
21SBTF06FVXR	P1D-S080MS-0300	D81VW004C4NJW3B	VZ13
21SBTF06FVXY	P1D-S080MS-0320	D81VW004C4NJW3C	VZ13E
21SBTF06MED	P1D-S080MS-0320	D81VW004C4NJW3F	VZ13N
21SBTF06MEN	P1D-S080MS-0350	D81VW004C4NJW4D	VZ13NS
21SBTF06MEX	P1D-S080MS-0350	D81VW004C4NJWI6N	VZ13NS_01
21SBTF06MPN	P1D-S080MS-0352	D81VW004C4NJWTI6N	VZ13R
21SBTF06MPNS	P1D-S080MS-0352	D81VW004C4NJWXG096	VZ14MS
21SBTF06MPX	P1D-S080MS-0370	D81VW004C4NPEE	VZ17

21SBTF06MPX6	P1D-S080MS-0370	D81VW004C4NYW	VZ17E
21SBTF06MPX8	P1D-S080MS-0400	D81VW004C4VJW	VZ17N
21SBTF06MVN	P1D-S080MS-0400	D81VW004C4VJW3A	VZ17NS_01
21SBTF06MVX	P1D-S080MS-0450	D81VW004C5NGW3K	VZ17R
21SBTF06RVX	P1D-S080MS-0450	D81VW004C5NGWI3N3A	VZ21
21SBTF08EVX	P1D-S080MS-0480	D81VW004C5NGWI5N91X712	VZ21E
21SBTF08MED	P1D-S080MS-0480	D81VW004C5NJW	VZ21N
21SBTF08MPN	P1D-S080MS-0485	D81VW004C5NJWTI6N	VZ21NS
21SBTF08MPNS	P1D-S080MS-0485	D81VW004C5NUW	VZ21R
21SBTF08MPX	P1D-S080MS-0500	D81VW004C6NJW	VZ26
21SBTF08MVN	P1D-S080MS-0500	D81VW004E1NJW	VZ26N
21SBTF08MVX	P1D-S080MS-0500CNNNN	D81VW004E4NJW	VZ33
21SBTF08REX	P1D-S080MS-0500CNNNN	D81VW004K4NJWI4N	VZ33N
21SBTF08RVX	P1D-S080MS-0500N1NNN	D81VW006C1NJW	V-ZUDB1AT2Z07B
21SBTF09EVX	P1D-S080MS-0500N1NNN	D81VW006C2NJW	V-ZUDB1AT2Z07E
21SBTF09MEN	P1D-S080MS-0570	D81VW006C4NJW	V-ZUDB1AT2Z07K
21SBTF09MEX	P1D-S080MS-0570	D81VW006C4NJW3B	V-ZUDB1AT61Z07K
21SBTF09MPN	P1D-S080MS-0600	D81VW006E1NJW3R	V-ZUDB1PT2Z07B
21SBTF09MPX	P1D-S080MS-0600	D81VW009C1NJWX729	V-ZUDB1PT2Z07E
21SBTF09MVN	P1D-S080MS-0625	D81VW009C2NJW	V-ZUDB1PT2Z07K
21SBTF09RVX	P1D-S080MS-0625	D81VW009C2NJWTI5N	W04LL71
21SBTF10EVX	P1D-S080MS-0650	D81VW009C2NJWTI6N	W04LL71X
21SBTF10MED	P1D-S080MS-0650	D81VW009C2VJWI3N	W04LLCF
21SBTF10MEX	P1D-S080MS-0690	D81VW009C3NJW	W04LLCFX
21SBTF10MPN	P1D-S080MS-0690	D81VW009C3NJW3B	W04ZLLCF
21SBTF10MPX	P1D-S080MS-0700	D81VW009C3NTW	W06L71
21SBTF10MVN	P1D-S080MS-0700	D81VW009C3NTW3A	W06L71X
21SBTF10RVX	P1D-S080MS-0720	D81VW009C5NGW	W06LCF
21SBTP06MPN	P1D-S080MS-0720	D81VW009C5NJW	W06LCFX
21SBTP06MPX	P1D-S080MS-0740	D81VW009C5NJW3A91X712	W06LL71
21SBTP06RVX	P1D-S080MS-0740	D81VW009C5NJW3B	W06LL71X
21SBTS04DPX	P1D-S080MS-0750	D81VW009C5NJWX976	W06LLCF
21SBTS04DPXB	P1D-S080MS-0750	D81VW009C6NJW	W06LLCFX
21SBTS04DPXG	P1D-S080MS-0800	D81VW009C6NTW	W06LLMS
21SBTS04DPXR	P1D-S080MS-0800	D81VW009E1NJWTI4NX729	W06LMS
21SBTS04DPXY	P1D-S080MS-0900	D81VW009K2NGWWI2N	W06LMSX
21SBTS04FVX	P1D-S080MS-0900	D81VW009K2NJW	W06LSPH71
21SBTS04FVXB	P1D-S080MS-1000	D81VW009K2NJWW	W06S71
21SBTS04FVXR	P1D-S080MS-1000	D81VW009K6NJW	W06S71X
21SBTS04MPN	P1D-S080MS-1100	D81VW009K6NJWTI5N	W06SCF
21SBTS04MPX	P1D-S080MS-1100	D81VW011C1NJW	W06SCFX
21SBTS04MPX0	P1D-S080MS-1200	D81VW011C1NJW3R	W06SMS
21SBTS06DEX	P1D-S080MS-1200	D81VW011C2NJW	W06ZL71
21SBTS06DPX	P1D-S080MS-1320	D81VW011C4NJW	W06ZLCF
21SBTS06DPXB	P1D-S080MS-1320	D81VW011C4VTW	W06ZLLCF
21SBTS06DPXG	P1D-S080MS-1350	D81VW011C5NHW91XG039	W06ZS71
21SBTS06DPXR	P1D-S080MS-1350	D81VW011C5NHWC999920	W06ZSCF
21SBTS06DPXY	P1D-S080MS-1370	D81VW011C5NJW	W08L71
21SBTS06FVX	P1D-S080MS-1370	D81VW011C5NYW	W08L71X
21SBTS06FVXB	P1D-S080MS-1380	D81VW012C2NJW	W08LCF
21SBTS06FVXG	P1D-S080MS-1380	D81VW014C2NJW	W08LCFX
21SBTS06FVXR	P1D-S080MS-1490	D81VW014C3NJW3A	W08LDPR71CF
21SBTS06MPN	P1D-S080MS-1490	D81VW015C1NJW	W08LL71

21SBTS06MPX	P1D-S080MS-1500	D81VW015C4NJW	W08LL71X
21SBTS06MVN	P1D-S080MS-1500	D81VW015E2NJW	W08LLCF
21SBTS06RVX	P1D-S080MS-1500CBNN8	D81VW016K2NJW	W08LLCFX
21SBTS08MPN	P1D-S080MS-1500CBNN8	D81VW020B1NJW	W08LLMS
21SBTS08MPX	P1D-S080MS-1500NG000	D81VW020B1NJWTI5N	W08LMS
21SBTS08MVN	P1D-S080MS-1500NG000	D81VW020B1NTW	W08LMSX
21SBTS08MVX	P1D-S080MS-1670	D81VW020B1VJW	W08LSPH71
21SBTS08RVX	P1D-S080MS-1670	D81VW020B1VTW3E	W08S71
21SBTS09MPX	P1D-S080MS-1700	D81VW020B2NJW	W08S71X
21SBTS09RVX	P1D-S080MS-1700	D81VW020B2NJW3D	W08SCF
21SBTS10MPN	P1D-S080MS-1750	D81VW020B2NJW3K	W08SCFX
21SBTS10MPX	P1D-S080MS-1750	D81VW020B2NJWI2N	W08SMS
21SBTS10RVX	P1D-S080MS-1800	D81VW020B2NJWTI5N	W08ZL71
21SDAW10MPN	P1D-S080MS-1800	D81VW020B3NJW3A	W08ZLCF
21SDAW13MEN	P1D-S080MS-2000	D81VW020B4NGW	W08ZLSSACF
21SDAW13MPN	P1D-S080MS-2000	D81VW020B4NJEE	W08ZLVITCF
21SDAW17MPN	P1D-S080MS-2820	D81VW020B4NJW	W08ZS71
21SDIW10MPN	P1D-S080MS-2820	D81VW020B4NJWI5N	W08ZSCF
21SDIW13MPN	P1D-S080VS-0320	D81VW020B4NJWTI5N	W10L71
21SDIW17MPN	P1D-S080VS-0320	D81VW020B4VJW	W10L71X
21SDTF06MPN	P1D-S100/S50788	D81VW020B5NJW3B	W10LCF
21SDTF08MPN	P1D-S100/S50788	D81VW020D1VJW	W10LCFX
21SDTF10MPN	P1D-S100/S51196	D81VW020D2NJW	W10LDPR71CF
21SFAD10MXN	P1D-S100/S51196	D81VW020D4NJEE	W10LL71
21SFAD10MXX	P1D-S100AS-0200	D81VW020D4NJW	W10LL71X
21SFAD12MXN	P1D-S100AS-0200	D81VW020D4NJW3A	W10LLCF
21SFAD12MXX	P1D-S100AS-0320	D81VW020D4VJW	W10LLCFX
21SFAD14MXN	P1D-S100AS-0320	D81VW020D5NJW	W10LLMS
21SFAD14MXX	P1D-S100AS-0400	D81VW020H1NJW3B	W10LMS
21SFAD14RXX	P1D-S100AS-0400	D81VW020H2NJWI4N	W10LMSX
21SFAK10MXN	P1D-S100FS-0025	D81VW020H4NJW	W10LSPH71
21SFAK10MXX	P1D-S100FS-0025	D81VW020H4NTW	W10S71
21SFAK13MXN	P1D-S100FS-0050NFNNN	D81VW020H4VJW3A	W10S71X
21SFAK13MXX	P1D-S100FS-0050NFNNN	D81VW020H4VTW	W10SCF
21SFAK13SXN	P1D-S100FS-0065NFNNN	D81VW021C1NJW	W10SCFX
21SFAK13SXNS_01	P1D-S100FS-0065NFNNN	D81VW021C2NJW	W10SMS
21SFAM10RXX	P1D-S100FS-0125	D81VW021C2NJW3A	W10ZL71
21SFAM12RXX	P1D-S100FS-0125	D81VW021C2NJWT	W10ZLCF
21SFAN10EXX	P1D-S100FS-0160	D81VW021C2NJWTI6N	W10ZLSSACF
21SFAN10FXX	P1D-S100FS-0160	D81VW021C4NJW	W10ZS71
21SFAN10MXN	P1D-S100FS-0650	D81VW021C4VJW	W10ZSCF
21SFAN10MXN6	P1D-S100FS-0650	D81VW022C1NJW	W12L
21SFAN10MXN8	P1D-S100MC-0040	D81VW026B2NJWTI5N	W12L71
21SFAN10MXX	P1D-S100MC-0040	D81VW026B4NJW	W12L71X
21SFAN10MXX0	P1D-S100MC-0160	D81VW026H4NJW	W12LCF
21SFAN10MXX6	P1D-S100MC-0160	D81VW030B1NJWX729	W12LCFX
21SFAN10MXX8	P1D-S100MC-0200	D81VW030B1NYWX729	W12LDPR71CF
21SFAN10RXX	P1D-S100MC-0200	D81VW030B2NJW	W12LDPR71MS
21SFAN13MXN	P1D-S100MC-0320	D81VW030B2NJWC990808	W12LL71
21SFAN13MXN8	P1D-S100MC-0320	D81VW030B2NJWTI2N	W12LL71X
21SFAN13MXX	P1D-S100MC-0450	D81VW030B2NJWTI5N	W12LLCF
21SFAN13MXX6	P1D-S100MC-0450	D81VW030B2NTW	W12LLCFX
21SFAN13RXX	P1D-S100MC-1000	D81VW030B6NJW	W12LLMS

21SFAN13SXN	P1D-S100MC-1000	D81VW030H2NJW	W12LLMSX
21SFAN17MXN	P1D-S100MF-0200	D81VW031C4NJWX591	W12LMS
21SFAN17MXX	P1D-S100MF-0200	D81VW032C1NJW	W12LMSX
21SFAW10DPXB	P1D-S100MS-0020	D81VW054E5NHWC991599X976	W12LSPH71
21SFAW10DPXG	P1D-S100MS-0020	D81VW056C2NJWTI6N	W12S71
21SFAW10DPXR	P1D-S100MS-0020NNN6N	D81VW073K2NJWTI4N	W12S71X
21SFAW10DPXY	P1D-S100MS-0020NNN6N	D81VW081C4NJW	W12SCF
21SFAW10DXX	P1D-S100MS-0025	D81VW081C4NJWC102020	W12SCFX
21SFAW10EXX	P1D-S100MS-0025	D81VW081C4NJWC999908	W12SMS
21SFAW10FVXB	P1D-S100MS-0025NNN6N	D81VW081C5NJW	W12SMSX
21SFAW10FVXG	P1D-S100MS-0025NNN6N	D81VW081C5NJWC999908	W12ZL71
21SFAW10FVXR	P1D-S100MS-0030	D81VW082C1NJW3C	W12ZLCF
21SFAW10FVXY	P1D-S100MS-0030	D825-21-01	W12ZLVITCF
21SFAW10FXX	P1D-S100MS-0045	D835-22-01	W12ZS71
21SFAW10MXC	P1D-S100MS-0045	D838-23-01	W12ZSCF
21SFAW10MXD	P1D-S100MS-0050	D852-11	W14S71
21SFAW10MXN	P1D-S100MS-0050	D852-21-01	W14S71X
21SFAW10MXN0	P1D-S100MS-0050CCNNN	D868-22-01	W14SCF
21SFAW10MXN3	P1D-S100MS-0050CCNNN	D892-23-01	W14SCFX
21SFAW10MXN6	P1D-S100MS-0050JNNNN	D893-23-01	W14SMS
21SFAW10MXN8	P1D-S100MS-0050JNNNN	D894-13	W14ZS71
21SFAW10MXNS_03	P1D-S100MS-0050NG000	D899-13	W14ZSCF
21SFAW10MXNS_05	P1D-S100MS-0050NG000	D89V001A1N3F91X712	W15L71
21SFAW10MXNS_06	P1D-S100MS-0050NNN6N	D89V001A3N91X712	W15L71X
21SFAW10MXNS_08	P1D-S100MS-0050NNN6N	D89V001A4N91X712	W15LCF
21SFAW10MXNS_15	P1D-S100MS-0060	D89V001C1N91X712	W15LCFX
21SFAW10MXX	P1D-S100MS-0060	D89V001C2N91X711	W15LDPR71CF
21SFAW10MXX0	P1D-S100MS-0065	D89V001C2N91X712	W15LDPR71MS
21SFAW10MXX0S	P1D-S100MS-0065	D89V001C3N3F91X712	W15LMS
21SFAW10MXX3	P1D-S100MS-0070	D89V002C1N91X712	W15LMSX
21SFAW10MXX6	P1D-S100MS-0070	D89V002C2N91X712	W15LSPH71
21SFAW10MXX8	P1D-S100MS-0075	D89V002C2V	W15ZL71
21SFAW10MXXS_04	P1D-S100MS-0075	D89V002C3N91X712	W15ZLCF
21SFAW10RXX	P1D-S100MS-0075NXNNN	D89V004A2N	W15ZLNBR71
21SFAW10RXX0	P1D-S100MS-0075NXNNN	D89V004C4N91X712	W15ZLVITCF
21SFAW10RXX3	P1D-S100MS-0080	D89V009C2N	W16S71
21SFAW10RXX6	P1D-S100MS-0080	D89V009C2N91X712	W16S71X
21SFAW10RXX8	P1D-S100MS-0080NG000	D89V009C3N91X712	W16SCF
21SFAW10SXN	P1D-S100MS-0080NG000	D89V011C1N91X712	W16SCFX
21SFAW13DPXB	P1D-S100MS-0090	D89V020B2N	W16SMS
21SFAW13DPXG	P1D-S100MS-0090	D89V030H6N91X712	W16ZS71
21SFAW13DPXR	P1D-S100MS-0100	D89V031C3N91X712	W16ZSCF
21SFAW13DPXY	P1D-S100MS-0100	D906-11	W16ZSVITCF
21SFAW13DXX	P1D-S100MS-0100N7144	D91FBB31HC2NF00	W18L71
21SFAW13EXX	P1D-S100MS-0100N7144	D91FBB31HC5NJW0	W18L71X
21SFAW13FVXB	P1D-S100MS-0100NDNNN	D91FBB32HC1NF00	W18LCF
21SFAW13FVXG	P1D-S100MS-0100NDNNN	D91FBB32HC1NKW0	W18LCFX
21SFAW13FVXR	P1D-S100MS-0100NG144	D91FBB32HC2NG00	W18LDPR71CF
21SFAW13FVXY	P1D-S100MS-0100NG144	D91FBB32HC2NKW0	W18LDPR71MS
21SFAW13FXX	P1D-S100MS-0110	D91FBB32HC2NS00	W18LMS
21SFAW13MXC	P1D-S100MS-0110	D91FBB32HC2VKW0	W18LMSX
21SFAW13MXD	P1D-S100MS-0110C7183	D91FBB32HC4NKW0	W18LSPH71
21SFAW13MXN	P1D-S100MS-0110C7183	D91FBB32HC4NS00	W18ZL71

21SFAW13MXN0	P1D-S100MS-0125	D91FBB32HC4VG00	W18ZLCF
21SFAW13MXN3	P1D-S100MS-0125	D91FBE01EC1NJW0	W18ZLVITCF
21SFAW13MXN6	P1D-S100MS-0145	D91FBE01EC5NJW0	W20S71
21SFAW13MXN8	P1D-S100MS-0145	D91FBE01EE4NJW0	W20S71X
21SFAW13MXNS_03	P1D-S100MS-0150	D91FBE01HC1NF00	W20SCF
21SFAW13MXX	P1D-S100MS-0150	D91FBE01HC1NJW0	W20SCFX
21SFAW13MXX0	P1D-S100MS-0150NDNNN	D91FBE01HC2NF00	W20SMS
21SFAW13MXX3	P1D-S100MS-0150NDNNN	D91FBE01HC2NF08	W20SMSX
21SFAW13MXX6	P1D-S100MS-0150NG190	D91FBE01HC4NF00	W20ZS71
21SFAW13MXX8	P1D-S100MS-0150NG190	D91FBE01HC4NF08	W20ZSCF
21SFAW13RXX	P1D-S100MS-0160	D91FBE01HC4NG00	W20ZSVITCF
21SFAW13RXX0	P1D-S100MS-0160	D91FBE01HC4NJW0	W22L71
21SFAW13RXX6	P1D-S100MS-0160N7000	D91FBE01HC4NKW0	W22L71X
21SFAW13RXX8	P1D-S100MS-0160N7000	D91FBE02EC1NF00	W22LCF
21SFAW13SXN	P1D-S100MS-0165	D91FBE02EC1NJW0	W22LCFX
21SFAW17EXX	P1D-S100MS-0165	D91FBE02EC2NJW0	W22LDPR71CF
21SFAW17MXC	P1D-S100MS-0175	D91FBE02EC4NF00	W22LDPR71MS
21SFAW17MXD	P1D-S100MS-0175	D91FBE02EC4NJW0	W22LMS
21SFAW17MXN	P1D-S100MS-0185	D91FBE02EC4NS00	W22LMSX
21SFAW17MXX	P1D-S100MS-0185	D91FBE02HC1NF00	W22ZL71
21SFAW17RXX	P1D-S100MS-0185NG000	D91FBE02HC1NJW0	W22ZLCF
21SFAW17SXN	P1D-S100MS-0185NG000	D91FBE02HC1NKW0	W22ZLSSACF
21SFIK13MXX	P1D-S100MS-0200	D91FBE02HC1NKW8	W22ZLVITCF
21SFIL17MXX	P1D-S100MS-0200	D91FBE02HC2NF00	W25S71
21SFIM10MXC	P1D-S100MS-0200ASMNN	D91FBE02HC2NKW0	W25S71X
21SFIM10MXN	P1D-S100MS-0200ASMNN	D91FBE02HC4NF00	W25SCF
21SFIM10MXX	P1D-S100MS-0230	D91FBE02HC4NG00	W25SCFX
21SFIM10RXX	P1D-S100MS-0230	D91FBE02HC4NJE0EE	W25SDPR71MS
21SFIM12MXN	P1D-S100MS-0250	D91FBE02HC4NJW0	W25SEINS.
21SFIM12MXX	P1D-S100MS-0250	D91FBE02HC4NKW0	W25SMS
21SFIM12RXX	P1D-S100MS-0275	D91FBE02HC4NS00	W25SMSX
21SFIM14MXN	P1D-S100MS-0275	D91FBR31HC4NS00	W25ZS71
21SFIM14MXX	P1D-S100MS-0279	D91FBZ32HC1NKWL	W25ZSCF
21SFIM14RXX	P1D-S100MS-0279	D91FEE01HC4NE70	W25ZSVITCF
21SFIN10MXN	P1D-S100MS-0300	D91FEZ01HC2NK0L	W28L71
21SFIN10MXX	P1D-S100MS-0300	D91FEZ01HC2NK7L	W28L71X
21SFIN10RXX	P1D-S100MS-0300NG150	D91FEZ02HC2NK7L	W28LCF
21SFIN13MXX	P1D-S100MS-0300NG150	D91FHA31H2NB00	W28LCFX
21SFIN13RXX	P1D-S100MS-0320	D91FHA31H2NB20	W28LDPR71CF
21SFIT10FXX	P1D-S100MS-0320	D91FHA32H2NB00	W28LMS
21SFIW10DPXB	P1D-S100MS-0350	D91FHA82H1NB20	W28ZL71
21SFIW10DPXG	P1D-S100MS-0350	D91FHB11H1NE00	W28ZLCF
21SFIW10DPXR	P1D-S100MS-0360	D91FHB11H2NB00	W28ZLSSACF
21SFIW10DPXY	P1D-S100MS-0360	D91FHB11H5NB00	W28ZLVITCF
21SFIW10DXX	P1D-S100MS-0370	D91FHB12H1NS00	W2N32ON6AB24VDC
21SFIW10EXX	P1D-S100MS-0370	D91FHB12H2NB00	W2N32SN6AB24VDC
21SFIW10FVXB	P1D-S100MS-0370	D91FHB12H4NB00	W2S
21SFIW10FVXY	P1D-S100MS-0370	D91FHB31F1NB00	W309-11
21SFIW10FXX	P1D-S100MS-0400	D91FHB31F2NE00	W309A-11
21SFIW10MXN	P1D-S100MS-0400	D91FHB31H1NB00	W309B-11
21SFIW10MXN0	P1D-S100MS-0400NG000	D91FHB31H2NB00	W309D-11
21SFIW10MXN3	P1D-S100MS-0400NG000	D91FHB31H2NB28	W30S71
21SFIW10MXN6	P1D-S100MS-0400NYNNN	D91FHB31H2NE00	W30S71X

21SFIW10MXN8	P1D-S100MS-0400NYNNN	D91FHB31H4VB00	W30SCF
21SFIW10MXNS	P1D-S100MS-0430	D91FHB32E4NB00	W30SCFX
21SFIW10MXX	P1D-S100MS-0430	D91FHB32H1NB00	W30SMS
21SFIW10MXX0	P1D-S100MS-0450	D91FHB32H2NB00	W30SMSX
21SFIW10MXX3	P1D-S100MS-0450	D91FHB32H2NE00	W30ZS71
21SFIW10MXX6	P1D-S100MS-0470	D91FHB32H4NB00	W30ZSCF
21SFIW10MXX8	P1D-S100MS-0470	D91FHB32H5NB00	W30ZSNBR71
21SFIW10RXX	P1D-S100MS-0500	D91FHB34H4NB00	W30ZSVITCF
21SFIW10SXN	P1D-S100MS-0500	D91FHB61H2NB00	W311-11
21SFIW13DXX	P1D-S100MS-0500C1NNN	D91FHB61H2NE00	W311A-11
21SFIW13DXXB	P1D-S100MS-0500C1NNN	D91FHB63H2NB00	W311B-11
21SFIW13DXXG	P1D-S100MS-0500NDNNN	D91FHB84H1NB00	W311C-11
21SFIW13DXXR	P1D-S100MS-0500NDNNN	D91FHB84H5NB00	W311D-11
21SFIW13DXXY	P1D-S100MS-0500SSNNN	D91FHB87H1NB20	W312-11
21SFIW13EXX	P1D-S100MS-0500SSNNN	D91FHE01E1NE00	W312A-11
21SFIW13FXX	P1D-S100MS-0550	D91FHE01E2NB08	W312B-11
21SFIW13FXXB	P1D-S100MS-0550	D91FHE01F1NB00	W312C-11
21SFIW13FXXG	P1D-S100MS-0600	D91FHE01F1NE00	W313-11
21SFIW13FXXR	P1D-S100MS-0600	D91FHE01H1NB00	W313A-11
21SFIW13FXXY	P1D-S100MS-0650	D91FHE01H1NB20	W313B-11
21SFIW13MXC	P1D-S100MS-0650	D91FHE01H1NE00	W313C-11
21SFIW13MXC0	P1D-S100MS-0700	D91FHE01H1VB00	W313D-11
21SFIW13MXC6	P1D-S100MS-0700	D91FHE01H2NB00	W313E-11
21SFIW13MXN	P1D-S100MS-0720	D91FHE01H2NB00X726	W316-11
21SFIW13MXN0	P1D-S100MS-0720	D91FHE01H2NB08	W320-21-01
21SFIW13MXN3	P1D-S100MS-0720NG000	D91FHE01H2NE00	W320A-21-01
21SFIW13MXN6	P1D-S100MS-0720NG000	D91FHE01H2NE00X726	W320B-21-01
21SFIW13MXN8	P1D-S100MS-0750	D91FHE01H2NS00	W320D-21-01
21SFIW13MXX	P1D-S100MS-0750	D91FHE01H2VB00	W321-21-01
21SFIW13MXX0	P1D-S100MS-0750N1NNN	D91FHE01H4NB00	W322-21-01
21SFIW13MXX3	P1D-S100MS-0750N1NNN	D91FHE01H5NB08	W323-21-01
21SFIW13MXX6	P1D-S100MS-0780	D91FHE02E1NB00	W333-11
21SFIW13MXX8	P1D-S100MS-0780	D91FHE02F1NB08X726	W334-11
21SFIW13RXX	P1D-S100MS-0800	D91FHE02F1NE00	W335-21-02
21SFIW13SXN	P1D-S100MS-0800	D91FHE02F1NE00XG029	W338-21-02
21SFIW17EXX	P1D-S100MS-0850	D91FHE02F1VB00	W338-21-03
21SFIW17MXN	P1D-S100MS-0850	D91FHE02F4NB00	W343596
21SFIW17MXX	P1D-S100MS-0900	D91FHE02H1NB00	W35L71
21SFIW17RXX	P1D-S100MS-0900	D91FHE02H1NB08	W35L71X
21SFIW17SXN	P1D-S100MS-0900N1NNN	D91FHE02H1NE00	W35LCF
21SFKK06MXD	P1D-S100MS-0900N1NNN	D91FHE02H1NE00XG029	W35LCFX
21SFKK06MXN	P1D-S100MS-1000	D91FHE02H1NS00	W35LDPR71CF
21SFKK06MXX	P1D-S100MS-1000	D91FHE02H2NB00	W35LDPR71MS
21SFKK08MXC6	P1D-S100MS-1000SG260	D91FHE02H2NE00	W35LMS
21SFKK08MXN	P1D-S100MS-1000SG260	D91FHE02H2NS00	W35ZL71
21SFKK08MXN6	P1D-S100MS-1150	D91FHE02H2VB00	W35ZLCF
21SFKK08MXNS	P1D-S100MS-1150	D91FHE02H4NB00	W35ZLVITCF
21SFKK08MXX	P1D-S100MS-1180	D91FHE02H4VB00	W365-11
21SFKK46MXX	P1D-S100MS-1180	D91FHE06H1NB00	W38S71
21SFKO06DPXB	P1D-S100MS-1200	D91FHE52E1NB00	W38S71X
21SFKO06DPXG	P1D-S100MS-1200	D91FHE52E1VB00	W38SCF
21SFKO06DPXR	P1D-S100MS-1200N7000	D91FHE52H1NB00	W38SCFX
21SFKO06DPXY	P1D-S100MS-1200N7000	D91FHE52H1NS00	W38ZS71

21SFKO06DXX	P1D-S100MS-1250	D91FHE52H2NB00	W38ZSCF
21SFKO06EXX	P1D-S100MS-1250	D91FHE52H2NE00	W38ZSVITCF
21SFKO06FVXB	P1D-S100MS-1350NG735	D91FHE52H4NB00	W42L71
21SFKO06FVXG	P1D-S100MS-1350NG735	D91FHE52H5NB00	W42L71X
21SFKO06FVXR	P1D-S100MS-1500	D91FHE85H1NB00	W42LCF
21SFKO06FVXY	P1D-S100MS-1500	D91FHE85H2NB00	W42LCFX
21SFKO06FXX	P1D-S100MS-1500NG000	D91FPA61HA2NK70	W42LMS
21SFKO06MXC	P1D-S100MS-1500NG000	D91FPB32HC1VK00	W42LMSX
21SFKO06MXC6	P1D-S100MS-1570	D91FPB61HA2NK70	W42LSTOSSCF
21SFKO06MXD	P1D-S100MS-1570	D91FPB61HB2NB00	W42LSTOSSCFX
21SFKO06MXN	P1D-S100MS-1600	D91FPB61HB5NK00	W42ZL71
21SFKO06MXN0	P1D-S100MS-1600	D91FPE02HC1NK70	W42ZLCF
21SFKO06MXN3	P1D-S100MS-1750	D91FPE52HA2NK00	W42ZLVITCF
21SFKO06MXN6	P1D-S100MS-1750	D91FPE52HB2NK00	W5300002
21SFKO06MXN8	P1D-S100MS-2000	D91FPZ32HC1VK0L	W5300002
21SFKO06MXNS	P1D-S100MS-2000	D91FPZ61HB1VK0L	WA10
21SFKO06MXNS_03	P1D-S100MS-2000YNNNN	D91FPZ61HB2NK7L	WA10N
21SFKO06MXNS_07	P1D-S100MS-2000YNNNN	D91FSA31H2NXW0	WA13
21SFKO06MXX	P1D-S100SR-0075	D91FSA32H2NLW0	WA132-60.3X2.9FSX
21SFKO06MXX0	P1D-S100SR-0075	D91FSB11H1NLW0	WA132-60.3X2.9SX
21SFKO06MXX3	P1D-S100SR-0370	D91FSB11H2NLW0	WA13N
21SFKO06MXX6	P1D-S100SR-0370	D91FSB11H4NXW0	WA140-76.1X3.2FSX
21SFKO06MXX8	P1D-S100VS-0200	D91FSB12H2NLW0	WA140-76.1X3.2SX
21SFKO06MXXS	P1D-S100VS-0200	D91FSB12H4NXW0	WA148-88.9X3.6FSX
21SFKO06RXX	P1D-S100VS-0200SXNNN	D91FSB16H1NLW0	WA148-88.9X3.6SX
21SFKO06RXX0	P1D-S100VS-0200SXNNN	D91FSB31H2NXW0	WA16-30X4.0SX
21SFKO06RXX3	P1D-S100WS-2000	D91FSB32H1NXW0	WA16-38X5.0SX
21SFKO06RXX6	P1D-S100WS-2000	D91FSB32H2NLW0	WA16-39X7.5SX
21SFKO06RXX8	P1D-S125AM-0550ZNNNN	D91FSB32H2NXW0	WA17
21SFKO06RXX8S	P1D-S125AM-0550ZNNNN	D91FSE01H1NLW0	WA20-38X4.0SSX
21SFKO06RXXS	P1D-S125AS-0250	D91FSE01H2NLW8	WA20-38X4.0SX
21SFKO08DPXB	P1D-S125AS-0250	D91FSE01H2NXW0	WA20X46X8.0SX
21SFKO08DPXG	P1D-S125AS-0480	D91FSE01H2NXW8	WA21
21SFKO08DPXR	P1D-S125AS-0480	D91FSE01H4NLW0	WA24-48.3X7.1SX
21SFKO08DPXY	P1D-S125MC-0100BCNNN	D91FSE01H4NXW0	WA24-50X5.0SSX
21SFKO08DXX	P1D-S125MC-0100BCNNN	D91FSE01H5NXW0	WA24-50X5.0SX
21SFKO08EXX	P1D-S125MC-0200	D91FSE02H1NLW0	WA2M12N010
21SFKO08FXX	P1D-S125MC-0200	D91FSE02H1NXW0	WA2M12N010
21SFKO08MXC6	P1D-S125MC-0260	D91FSE02H2NXW0	WA32-60.3X8.7SSX
21SFKO08MXN	P1D-S125MC-0260	D91FSE02H4NLW0	WA32-60X3.0SX
21SFKO08MXN0	P1D-S125MC-0400	D91VW000C2NJWXG086	WA32-60X5.0SSX
21SFKO08MXN3	P1D-S125MC-0400	D91VW001C1NJW	WA32-66X8.5SX
21SFKO08MXN6	P1D-S125MC-0600FNNNN	D91VW001C1NJW3A	WA40-76.1X6.3SX
21SFKO08MXN8	P1D-S125MC-0600FNNNN	D91VW001C1NJWTI6N	WA40-80X10.0SSX
21SFKO08MXNS	P1D-S125MR-0300	D91VW001C2NJW	WA48-88.9X11.1SSX
21SFKO08MXX	P1D-S125MR-0300	D91VW001C2NJWTI6N	WA48-88.9X5.5SX
21SFKO08MXX0	P1D-S125MS-0010	D91VW001C4NJW	WAI10E
21SFKO08MXX3	P1D-S125MS-0010	D91VW001C4NJW3A	WAI13E
21SFKO08MXX6	P1D-S125MS-0025	D91VW001C4NJW3F	WAI17E
21SFKO08MXX8	P1D-S125MS-0025	D91VW001C4NUWI6N	WAI21E
21SFKO08MXXS	P1D-S125MS-0040	D91VW001C5NJW	WAI26E
21SFKO08MXXS_01	P1D-S125MS-0040	D91VW001C5NJW3A	WAS06L
21SFKO08RXX	P1D-S125MS-0050	D91VW001C5NJWI6N	WAS06LX

21SFKO08RXX8	P1D-S125MS-0050	D91VW001C5NJWTI6N	WAS06SX
21SFKO10MXN	P1D-S125MS-0060	D91VW001E2NJW	WAS08L
21SFKO10MXX	P1D-S125MS-0060	D91VW001E2NJWTI5N	WAS08L71X
21SFKO12MXNS	P1D-S125MS-0070	D91VW001K2NJW	WAS08LX
21SFKO12MXXS	P1D-S125MS-0070	D91VW001K4NJWTI4N	WAS08S
21SFKO46MXN	P1D-S125MS-0075	D91VW002C2NJEE	WAS10L
21SFKO46MXX	P1D-S125MS-0075	D91VW002C2NJW	WAS10L71
21SFKO46RXX	P1D-S125MS-0080	D91VW003C1NJW	WAS10L71X
21SFKP06FVX	P1D-S125MS-0080	D91VW003C4NJW	WAS10LX
21SFKP06FVXB	P1D-S125MS-0100	D91VW003C4NJW3F	WAS10S
21SFKP06FVXG	P1D-S125MS-0100	D91VW003F2NTW3A	WAS12L
21SFKP06FVXR	P1D-S125MS-0125	D91VW004C1NJW	WAS12L71X
21SFKP06FVXY	P1D-S125MS-0125	D91VW004C1NJW3K	WAS12LX
21SFKP08FVX	P1D-S125MS-0160	D91VW004C2NJW	WAS12S
21SFKP08FVXB	P1D-S125MS-0160	D91VW004C4NJW	WAS12S71
21SFKP08FVXY	P1D-S125MS-0180	D91VW004C4NJW3A	WAS12SX
21SFKS06DPXB	P1D-S125MS-0180	D91VW004C4VYW	WAS12ZL
21SFKS06DPXG	P1D-S125MS-0200	D91VW004C5NJW	WAS14SX
21SFKS06DPXR	P1D-S125MS-0200	D91VW004C5VJW	WAS15L
21SFKS06DPXY	P1D-S125MS-0220	D91VW005C1NJW	WAS15L71X
21SFKS06DXX	P1D-S125MS-0220	D91VW006C1NJW3K	WAS15LX
21SFKS06EXX	P1D-S125MS-0230	D91VW006K2NJW	WAS16S
21SFKS06FXX	P1D-S125MS-0230	D91VW007C2NJW3A	WAS16SX
21SFKS06MXC	P1D-S125MS-0235	D91VW009C2NJW	WAS16ZS
21SFKS06MXN	P1D-S125MS-0235	D91VW009C2NJW3A	WAS18L
21SFKS06MXNS_01	P1D-S125MS-0250	D91VW009C5NJW	WAS18L71X
21SFKS06MXX	P1D-S125MS-0250	D91VW009F2NJWX976	WAS18LX
21SFKS06RXX	P1D-S125MS-0270	D91VW009K2NJW	WAS18ZL
21SFKS08DPXB	P1D-S125MS-0270	D91VW009K2NJWX976	WAS20S
21SFKS08DPXG	P1D-S125MS-0300	D91VW011C1NJW	WAS20S71
21SFKS08DPXR	P1D-S125MS-0300	D91VW011C4NJW	WAS20SX
21SFKS08DPXY	P1D-S125MS-0320	D91VW015C4NJW	WAS22L
21SFKS08DXX	P1D-S125MS-0320	D91VW015C4NJW3A	WAS22L71
21SFKS08FXX	P1D-S125MS-0325	D91VW015K2NJWTI4N	WAS22L71X
21SFKS08MXN	P1D-S125MS-0325	D91VW020B1NJW	WAS22LBL71
21SFKS08MXX	P1D-S125MS-0350	D91VW020B2NJEE	WAS22LX
21SFKS08RXX	P1D-S125MS-0350	D91VW020B2NJW	WAS25S
21SFKS46MXN	P1D-S125MS-0400	D91VW020B2NJW1R	WAS25S71
21SFKS46MXN0	P1D-S125MS-0400	D91VW020B2NJW3A	WAS25SX
21SFMP12MXX	P1D-S125MS-0400NDNNN	D91VW020B4NJW	WAS25ZS
21SFRP06MPN	P1D-S125MS-0400NDNNN	D91VW020B5NJWTI5N	WAS28L
21SFRP08MPN	P1D-S125MS-0400NG000	D91VW020H1NJW	WAS28L71
21SFTD06MXX	P1D-S125MS-0400NG000	D91VW020H4NJW	WAS28L71X
21SFTF04DPXB	P1D-S125MS-0400SG000	D91VW021C1NJW3A	WAS28LBL71
21SFTF04DPXG	P1D-S125MS-0400SG000	D91VW021C2NJW	WAS28LX
21SFTF04DPXR	P1D-S125MS-0440	D91VW021K5NJWTI4N	WAS28ZL
21SFTF04DXX	P1D-S125MS-0440	D91VW026H2NJW	WAS30S
21SFTF04EXX	P1D-S125MS-0450	D91VW026H2NJWT	WAS30SX
21SFTF04FXX	P1D-S125MS-0450	D91VW030B2NJEE	WAS30ZS
21SFTF04MXC	P1D-S125MS-0490NG363	D91VW030B2NJWC999908	WAS32/21.6S
21SFTF04MXN	P1D-S125MS-0490NG363	D91VW030D2NJW	WAS32/21.6SM
21SFTF04MXN0	P1D-S125MS-0500	D91VW043E2NJWTI5N	WAS32/21.6SU
21SFTF04MXN3	P1D-S125MS-0500	D91VW054C1NJW	WAS33/25SA171X

21SFTF04MXN6	P1D-S125MS-0525	D91VW059C1NJW	WAS33/27.2S
21SFTF04MXN8	P1D-S125MS-0525	D91VW073K2NJWI4N	WAS33/27.2SM
21SFTF04MXX	P1D-S125MS-0530	D91VW073K2NJWTI4N	WAS33/27.2SS
21SFTF04MXX0	P1D-S125MS-0530	D91VW073K5NJWI4N	WAS33/27.2SU
21SFTF04MXX3	P1D-S125MS-0600	D91VW081C1NJW	WAS34/34.5S
21SFTF04MXX6	P1D-S125MS-0600	D91VW081C4NJWC999908	WAS34/34.5SM
21SFTF04MXX8	P1D-S125MS-0600NG000	D91VW081C5NJW	WAS34/34.5SU
21SFTF04RXX	P1D-S125MS-0600NG000	D91VWZ82C5NJWCZ10	WAS35/38SA371X
21SFTF04SXN	P1D-S125MS-0700	D96FHB83H2NB00	WAS35/42.8S
21SFTF05MXN	P1D-S125MS-0700	D96FHB83H2NB20	WAS35/42.8SM
21SFTF05MXX	P1D-S125MS-1000	D96FHE01E5NB00	WAS35/42.8SS
21SFTF05RXX	P1D-S125MS-1000	D96FHE01E5NE00	WAS35/42.8SU
21SFTF05SXN	P1D-S125MS-1070	D96FHE01H2NB00	WAS35LX
21SFTF06DPXB	P1D-S125MS-1070	D96FHE01H4NB00	WAS36/48.6S
21SFTF06DPXG	P1D-S125MS-1180	D96FHE01H5NB00	WAS36/48.6SM
21SFTF06DPXR	P1D-S125MS-1180	D96FHE52H1NB00	WAS36/48.6SS
21SFTF06DPXY	P1D-S125MS-1200	D96FHE52H4NB00	WAS36/48.6SSM
21SFTF06DXX	P1D-S125MS-1200	D99V001C1N	WAS36/48.6SU
21SFTF06EXX	P1D-S125MS-1300	D99V001E5NI2N	WAS38S
21SFTF06FVXB	P1D-S125MS-1300	D99V002C2N	WAS38SX
21SFTF06FVXR	P1D-S125MS-1500	D99V031C2N	WAS42L
21SFTF06FVXY	P1D-S125MS-1500	D9D9-8-8W	WAS42LX
21SFTF06FXX	P1D-S125MS-2500	D9DT-16	WAS62/21.6S
21SFTF06MXC	P1D-S125MS-2500	D9DT-4	WAS62/21.6SM
21SFTF06MXC0	P1D-S125WS-1000	D9DT-6	WAS62/21.6SU
21SFTF06MXC3	P1D-S125WS-1000	D9DT-8	WAS63/27.2S
21SFTF06MXC6	P1D-SK35MS-0080	D9L009C5N	WAS63/27.2SM
21SFTF06MXC8	P1D-SK35MS-0080	D9L020B2N	WAS63/27.2SU
21SFTF06MXN	P1D-SL50MS-0500	D9LB001C5N	WAS64/25X4S
21SFTF06MXN0	P1D-SL50MS-0500	D9LB004C2N	WAS64/34.5S
21SFTF06MXN3	P1D-SLB0MC-0650	D9LB020D2N	WAS64/34.5SM
21SFTF06MXN6	P1D-SLB0MC-0650	D9P002A2N3F91X712	WAS64/34.5SU
21SFTF06MXN8	P1D-SLF0MS-0100	D9P002C2N91X711	WAS65/42.8S
21SFTF06MXX	P1D-SLF0MS-0100	D9P004C2N	WAS65/42.8SM
21SFTF06MXX0	P1D-SM35MC-0400	D9P006C2N	WAS65/42.8SU
21SFTF06MXX3	P1D-SM35MC-0400	D9P006C2NI3N	WAS66/48.6S
21SFTF06MXX6	P1D-SM35MS-0280	D9P011C2N	WAS66/48.6SM
21SFTF06MXX8	P1D-SM35MS-0280	D9P012C2N	WAS66/48.6SS
21SFTF06RXX	P1D-SM35MS-0400	D9P020B2NI5N	WAS66/48.6SU
21SFTF06RXX8	P1D-SM35MS-0400	D9P081C2N	WBMB10
21SFTF06SXN	P1D-SM57MR-0160	D9P201A2N	WBMB12
21SFTF08EXX	P1D-SM57MR-0160	D9P201A2NXG257	WBMB14
21SFTF08MXN	P1D-SMA0VS-0500	DA06L71	WBMB16
21SFTF08MXX	P1D-SMA0VS-0500	DA06LCF	WBMB4
21SFTF08MXX0	P1D-SMB4MS-0120	DA06LOMD71	WBMB6
21SFTF08MXX3	P1D-SMB4MS-0120	DA06LOMDCF	WBMB8
21SFTF08MXX6	P1D-SN14MS-0011	DA06LVITOMDCF	WBMPB10
21SFTF08MXX8	P1D-SN14MS-0011	DA06S71	WBMPB12
21SFTF08RXX	P1D-SN20AS-0765	DA06SCF	WBMPB6
21SFTF08SXN	P1D-SN20AS-0765	DA06SOMD71	WBMPB8
21SFTF09EXX	P1D-SN20AS-0780	DA06SOMDCF	WBPL10/12
21SFTF09MXN	P1D-SN20AS-0780	DA06ZL71	WBPL11/14
21SFTF09MXX	P1D-SN22MS-0215	DA06ZLCF	WBPL4/6

21SFTF09RXX	P1D-SN22MS-0215	DA06ZSCF	WBPL6/8
21SFTF09SXN	P1D-SN38MC-0250N1NNN	DA08L71	WBPL8/10
21SFTF10EXX	P1D-SN38MC-0250N1NNN	DA08LCF	WBRAB12
21SFTF10MXD	P1D-SNA0MS-0950	DA08LOMD71	WBZ 10-10-SS
21SFTF10MXN	P1D-SNA0MS-0950	DA08LOMDCF	WBZ 12-12-SS
21SFTF10MXX	P1D-SNL0MS-0500	DA08LVITOMDCF	WBZ 16-16-SS
21SFTF10RXX	P1D-SNL0MS-0500	DA08SCF	WBZ 20-20-SS
21SFTF10SXN	P1D-SNR0MS-0715	DA08SOMD71	WBZ 25-25-SS
21SFTP06MXN	P1D-SNR0MS-0715	DA08SOMDCF	WBZ 6-6-SS
21SFTP06MXX	P1D-SNW0MS-0200	DA08ZL71	WBZ 8-8-SS
21SFTP06RXX	P1D-SNW0MS-0200	DA08ZLCF	WD17
21SFTS04DPXB	P1D-SP75MS-0200	DA08ZS71	WD17-26
21SFTS04DPXG	P1D-SP75MS-0200	DA08ZSCF	WD21
21SFTS04DPXR	P1D-SP90MS-0100	DA10L71	WD21-26
21SFTS04DPXY	P1D-SP90MS-0100	DA10LCF	WD21S
21SFTS04DXX	P1D-SPA0VS-0500	DA10LOMD71	WDV2-425
21SFTS04FVXB	P1D-SPA0VS-0500	DA10LOMDCF	WDV2-425
21SFTS04FVXG	P1D-SRD0MS-0250	DA10LVITOMDCF	WDV3-G22BL
21SFTS04FVXR	P1D-SRD0MS-0250	DA10S71	WDV3-G22BL
21SFTS04FVXY	P1D-T032AS-0030	DA10SCF	WDV3-G24BL
21SFTS04FXX	P1D-T032AS-0030	DA10SOMD71	WDV3-G24BL
21SFTS04MXN	P1D-T032AS-0050	DA10SOMDCF	WE04LL1/8NPT71X
21SFTS04MXN0	P1D-T032AS-0050	DA10ZL71	WE04LL1/8NPTCF
21SFTS04MXN3	P1D-T032FJ-0125NG065	DA10ZLCF	WE04LL1/8NPTCFX
21SFTS04MXN6	P1D-T032FJ-0125NG065	DA10ZLSSACF	WE04LLM10X1CF
21SFTS04MXN8	P1D-T032FS-0080	DA10ZSCF	WE04LLM10X1CFX
21SFTS04MXX	P1D-T032FS-0080	DA12L71	WE04LLM6KEGCF
21SFTS04MXX0	P1D-T032FS-0160N3NNN	DA12LCF	WE04LLM6KEGCFX
21SFTS04MXX3	P1D-T032FS-0160N3NNN	DA12LOMD71	WE04LLM71
21SFTS04MXX6	P1D-T032MC-0150	DA12LOMDCF	WE04LLMCF
21SFTS04MXX8	P1D-T032MC-0150	DA12LVITOMDCF	WE04LLMCFX
21SFTS05MXN	P1D-T032MF-0110	DA12S71	WE04LLMMS
21SFTS05MXX	P1D-T032MF-0110	DA12SCF	WE04LLMSA108CF
21SFTS06DPXB	P1D-T032MJ-0065	DA12SOMD71	WE04LLR71
21SFTS06DPXG	P1D-T032MJ-0065	DA12SOMDCF	WE04LLR71X
21SFTS06DPXR	P1D-T032MS-0015	DA12SVITOMDCF	WE04LLRCF
21SFTS06DPXY	P1D-T032MS-0015	DA12ZL71	WE04LLRCFX
21SFTS06DXX	P1D-T032MS-0020	DA12ZLCF	WE04LLRMS
21SFTS06FXX	P1D-T032MS-0020	DA12ZSCF	WE04ZLLMCF
21SFTS06MXN	P1D-T032MS-0025	DA14SCF	WE05LLMCFX
21SFTS06MXN0	P1D-T032MS-0025	DA14SOMD71	WE06L1/2NPTMS
21SFTS06MXN3	P1D-T032MS-0030	DA14SOMDCF	WE06L1/4NPT71
21SFTS06MXN6	P1D-T032MS-0030	DA14ZSCF	WE06L1/4NPT71X
21SFTS06MXN8	P1D-T032MS-0032NXNNN	DA15L71	WE06L1/4NPTCF
21SFTS06MXX	P1D-T032MS-0032NXNNN	DA15LCF	WE06L1/4NPTCFX
21SFTS06MXX0	P1D-T032MS-0040	DA15LOMD71	WE06L1/4NPTMS
21SFTS06MXX3	P1D-T032MS-0040	DA15LOMDCF	WE06L1/4NPTMSX
21SFTS06MXX6	P1D-T032MS-0045NG092	DA15ZL71	WE06L1/8NPT71
21SFTS06MXX8	P1D-T032MS-0045NG092	DA15ZLCF	WE06L1/8NPT71X
21SFTS08MXN	P1D-T032MS-0050	DA15ZLVITSSACF	WE06L1/8NPTCF
21SFTS08MXX	P1D-T032MS-0050	DA16S71	WE06L1/8NPTCFX
21SFTS09MXN	P1D-T032MS-0050NG062	DA16SCF	WE06L1/8NPTMS
21SFTS09MXX	P1D-T032MS-0050NG062	DA16SOMD71	WE06L3/8NPT71

21SFTS09MXXS	P1D-T032MS-0060	DA16SOMDCF	WE06LL1/8NPTCF
21SFTS10MXN	P1D-T032MS-0060	DA16ZSCF	WE06LL1/8NPTCFX
21SFTS10MXX	P1D-T032MS-0070	DA18L71	WE06LL1/8NPTMS
21SFTZ08MXX	P1D-T032MS-0070	DA18LCF	WE06LLM6KEGCF
21SLAD12MPN	P1D-T032MS-0070NG062	DA18LOMD71	WE06LLM6KEGCFX
21SLAD12MPX	P1D-T032MS-0070NG062	DA18LOMDCF	WE06LLM71
21SLAM14RVX	P1D-T032MS-0070NG067	DA18LVITOMDCF	WE06LLM8X1KEGCF
21SLAN10MPX	P1D-T032MS-0070NG067	DA18ZL71	WE06LLM8X1KEGCFX
21SLAN13EVX	P1D-T032MS-0075	DA18ZLCF	WE06LLMCF
21SLAN13MPN	P1D-T032MS-0075	DA20S71	WE06LLMCFX
21SLAW10EEX	P1D-T032MS-0080	DA20SCF	WE06LLR1/4CFX
21SLAW10EVX	P1D-T032MS-0080	DA20SOMD71	WE06LLR71
21SLAW10MEX	P1D-T032MS-0090	DA20SOMDCF	WE06LLR71X
21SLAW10MPN	P1D-T032MS-0090	DA20ZSCF	WE06LLRCF
21SLAW10MPX	P1D-T032MS-0100	DA22L71	WE06LLRCFX
21SLAW10MVN	P1D-T032MS-0100	DA22LCF	WE06LLRMS
21SLAW10MVX	P1D-T032MS-0110	DA22LOMD71	WE06LLRMSX
21SLAW10REX	P1D-T032MS-0110	DA22LOMDCF	WE06LM71
21SLAW10RVX	P1D-T032MS-0120	DA22ZL71	WE06LM71X
21SLAW13EVX	P1D-T032MS-0120	DA22ZLCF	WE06LM8X1KEGCF
21SLAW13MEX	P1D-T032MS-0120NG066	DA25S71	WE06LMCF
21SLAW13MPN	P1D-T032MS-0120NG066	DA25SCF	WE06LMCFX
21SLAW13MPX	P1D-T032MS-0125	DA25SOMD71	WE06LMMS
21SLAW13MVN	P1D-T032MS-0125	DA25SOMDCF	WE06LR1/471
21SLAW13RVX	P1D-T032MS-0125NG062	DA25ZS71	WE06LR1/471X
21SLAW17EKX	P1D-T032MS-0125NG062	DA25ZSCF	WE06LR1/4CF
21SLAW17EVX	P1D-T032MS-0150	DA28L71	WE06LR1/4CFX
21SLAW17MPX	P1D-T032MS-0150	DA28LCF	WE06LR1/4MS
21SLAW17RVX	P1D-T032MS-0160	DA28LOMD71	WE06LR1/4MSX
21SLIM12MPX	P1D-T032MS-0160	DA28LOMDCF	WE06LR71
21SLIM14MPX	P1D-T032MS-0175	DA28ZLCF	WE06LR71X
21SLIW10EVX	P1D-T032MS-0175	DA28ZLVITSSACF	WE06LRCF
21SLIW10MPN	P1D-T032MS-0200	DA30S71	WE06LRCFX
21SLIW10MPX	P1D-T032MS-0200	DA30SCF	WE06LRMS
21SLIW10RVX	P1D-T032MS-0250	DA30SOMD71	WE06LRMSX
21SLIW13EVX	P1D-T032MS-0250	DA30SOMDCF	WE06LRSPH71
21SLIW13MEN	P1D-T032MS-0270	DA30ZSCF	WE06S1/2NPT71
21SLIW13MPN	P1D-T032MS-0270	DA35L71	WE06S1/4NPT71
21SLIW13MPX	P1D-T032MS-0270NG339	DA35LCF	WE06S1/4NPT71X
21SLIW17EKX	P1D-T032MS-0270NG339	DA35LOMD71	WE06S1/4NPTCF
21SLIW17EVX	P1D-T032MS-0275	DA35LOMDCF	WE06S1/4NPTCFX
21SLIW17MPN	P1D-T032MS-0275	DA35ZLCF	WE06S1/4NPTMS
21SLIW17MPX	P1D-T032MS-0300	DA38S71	WE06SMCF
21SLIW17RVX	P1D-T032MS-0300	DA38SCF	WE06SMCFX
21SLKK06MPN	P1D-T032MS-0320	DA38SOMD71	WE06SR1/871
21SLKK06MPX	P1D-T032MS-0320	DA38SOMDCF	WE06SR3/871
21SLKK08MPN	P1D-T032MS-0360	DA38ZSCF	WE06SR71
21SLKK08MPX	P1D-T032MS-0360	DA42L71	WE06SR71X
21SLKO06EVX	P1D-T032MS-0400	DA42LCF	WE06SRCF
21SLKO06MPN	P1D-T032MS-0400	DA42LOMD71	WE06SRCFX
21SLKO06MPX	P1D-T032MS-0450	DA42LOMDCF	WE06SRMS
21SLKO06RVX	P1D-T032MS-0450	DA42ZLCF	WE06SRSPH71
21SLKO08EVX	P1D-T032MS-0460	DAFB209P04E	WE06ZLRCF

21SLKO08MPN	P1D-T032MS-0460	DAVN589P20E10PBF	WE08L1/2NPTCF
21SLKO08MPX	P1D-T032MS-0500	DB048924	WE08L1/4NPT71
21SLKO08MVN	P1D-T032MS-0500	DB122A49	WE08L1/4NPT71X
21SLKO08RVX	P1D-T032MS-0600	DB122A49	WE08L1/4NPTCF
21SLKS06RVX	P1D-T032MS-0600	DB123A49	WE08L1/4NPTCFX
21SLKS08MPN	P1D-T032MS-0825	DB123A49	WE08L1/4NPTMS
21SLKS08MPX	P1D-T032MS-0825	DB123DXX	WE08L1/4NPTMSX
21SLKS08RVX	P1D-T032MS-0850	DB123DXX	WE08L1/8NPT71
21SLTF04MPN	P1D-T032MS-0850	DB222A49	WE08L1/8NPT71X
21SLTF04MPX	P1D-T040AS-0520	DB222A49	WE08L1/8NPTCF
21SLTF05EVX	P1D-T040AS-0520	DB223A49	WE08L1/8NPTCFX
21SLTF06EVX	P1D-T040MC-0040	DB223A49	WE08L3/8NPT71X
21SLTF06MENS	P1D-T040MC-0040	DB223AXX	WE08L3/8NPTCF
21SLTF06MEX	P1D-T040MC-0065	DB223AXX	WE08LL1/8NPT71
21SLTF06MPN	P1D-T040MC-0065	DB223DXX	WE08LL1/8NPTCF
21SLTF06MPX	P1D-T040MC-0150	DB223DXX	WE08LL1/8NPTCFX
21SLTF06RVX	P1D-T040MC-0150	DB462756	WE08LLM71
21SLTF08MPN	P1D-T040MJ-0305	DB462762	WE08LLM71X
21SLTF08MPX	P1D-T040MJ-0305	DB462778	WE08LLMCF
21SLTF08RVX	P1D-T040MS-0012	DB462926	WE08LLMCFX
21SLTF09EVX	P1D-T040MS-0012	DB466598U094	WE08LLR1/4CF
21SLTF09MPN	P1D-T040MS-0020	DB481005	WE08LLR71
21SLTF09MPX	P1D-T040MS-0020	DBL2H-00040-0R2-000-S40	WE08LLR71X
21SLTF09RVX	P1D-T040MS-0025	DBL2H-00040-0R2-000-S40	WE08LLRCF
21SLTF10EVX	P1D-T040MS-0025	DBL2H-00040-BR2-000-S40	WE08LLRCFX
21SLTF10MPN	P1D-T040MS-0025NG100	DBL2H-00040-BR2-000-S40	WE08LLRMS
21SLTF10MPX	P1D-T040MS-0025NG100	DBL2H-00080-0R2-000-S40	WE08LLRMSX
21SLTF10RVX	P1D-T040MS-0030	DBL2H-00080-0R2-000-S40	WE08LM71
21SLTP06MPX	P1D-T040MS-0030	DBL2H-00080-BR2-000-S40	WE08LM71X
21SLTS04MPX	P1D-T040MS-0040	DBL2H-00080-BR2-000-S40	WE08LMCF
21SLTS04MVX	P1D-T040MS-0040	DBL3H-00065-BR2-000-S40	WE08LMCFX
21SLTS05MPX	P1D-T040MS-0045	DBL3H-00065-BR2-000-S40	WE08LR1/271
21SLTS06MPN	P1D-T040MS-0045	DBL3H-00065-OR2-000-S40	WE08LR1/871
21SLTS06MPX	P1D-T040MS-0050	DBL3H-00065-OR2-000-S40	WE08LR1/871X
21SLTS10MPN	P1D-T040MS-0050	DBL3H-00130-BR2-000-S40	WE08LR1/8CF
21SLTS10MPX	P1D-T040MS-0050NG079	DBL3H-00130-BR2-000-S40	WE08LR1/8CFX
21SSAN10MXX	P1D-T040MS-0050NG079	DBL3H-00130-OR2-000-S40	WE08LR1/8KSA113CFX
21SSAN13MXX	P1D-T040MS-0050NNN6N	DBL3H-00130-OR2-000-S40	WE08LR1/8MS
21SSAW10MXN	P1D-T040MS-0050NNN6N	DBL3N-00300-0R2-000-S40	WE08LR3/871
21SSAW10MXX	P1D-T040MS-0065	DBL3N-00300-0R2-000-S40	WE08LR3/8CF
21SSAW13MXN	P1D-T040MS-0065	DBL3N-00300-BR2-000-S40	WE08LR3/8CFX
21SSAW13MXX	P1D-T040MS-0075	DBL3N-00300-BR2-000-S40	WE08LR3/8MS
21SSAW17MXN	P1D-T040MS-0075	DBL4N-00260-0R2-000-S40	WE08LR71
21SSAW17MXX	P1D-T040MS-0075NNN6N	DBL4N-00260-0R2-000-S40	WE08LR71X
21SSIN10MXX	P1D-T040MS-0075NNN6N	DBL4N-00260-BR2-000-S40	WE08LRCF
21SSIN13MXX	P1D-T040MS-0080	DBL4N-00260-BR2-000-S40	WE08LRCFX
21SSIW10MXN	P1D-T040MS-0080	DBL4N-00530-0R2-000-S40	WE08LRDPR71MS
21SSIW10MXX	P1D-T040MS-0080NDNNN	DBL4N-00530-0R2-000-S40	WE08LRMS
21SSIW13MXN	P1D-T040MS-0080NDNNN	DBL4N-00750-BR2-000-S40	WE08LRMSX
21SSIW13MXX	P1D-T040MS-0080NG073	DBL4N-00750-BR2-000-S40	WE08LRSPH71
21SSTF04MXN	P1D-T040MS-0080NG073	DBL5N-01050-BR2-000-S40	WE08S1/2NPTCF
21SSTF04MXX	P1D-T040MS-0090	DBL5N-01050-BR2-000-S40	WE08S1/4NPT71
21SSTF06MXN	P1D-T040MS-0090	DBM/3P/3-01	WE08S1/4NPT71X

21SSTF06MXX	P1D-T040MS-0100	DBZ 10-1/2-SS	WE08S1/4NPTCF
21SSTF06RXX	P1D-T040MS-0100	DBZ 10-1/4-SS	WE08S1/4NPTCFX
21SSTF06SXN	P1D-T040MS-0120	DBZ 10-3/8-SS	WE08S3/8NPT71X
21SSTF07EXX	P1D-T040MS-0120	DBZ 12-1/2-SS	WE08S3/8NPTCF
21SSTF08MXC	P1D-T040MS-0125	DBZ 12-1/4-SS	WE08SM71
21SSTF08MXN	P1D-T040MS-0125	DBZ 12-3/8-SS	WE08SMCF
21SSTF08MXX	P1D-T040MS-0150	DBZ 6-1/4-SS	WE08SMCFX
21SSTF09MXN	P1D-T040MS-0150	DBZ 6-1/8-SS	WE08SR3/8CF
21SSTF09MXX	P1D-T040MS-0150NG080	DBZ 8-1/4-SS	WE08SR71
21SSTF10MXN	P1D-T040MS-0150NG080	DBZ 8-1/8-SS	WE08SR71X
21SSTF10MXX	P1D-T040MS-0160	DC.28.M15	WE08SRCF
2-2 B2HF-SS	P1D-T040MS-0160	DC.28.PB.PB	WE08SRCFX
2-2 CBZ-B	P1D-T040MS-0160J8NNN	DC.42.T0103	WE08SRMS
2-2 CBZ-SS	P1D-T040MS-0160J8NNN	DC048855	WE08SRMSX
2-2 DBZ-SS	P1D-T040MS-0185	DC1200S	WE08ZLRCF
2-2 EBZ-B	P1D-T040MS-0185	DC28B04K	WE08ZSRCF
2-2 EBZ-SS	P1D-T040MS-0200	DC28B05K	WE10/06
2-2 FBZ-B	P1D-T040MS-0200	DC28B06K	WE10/08
2-2 FBZ-SS	P1D-T040MS-0230	DC28B07K	WE10/10
2-2 FE-B	P1D-T040MS-0230	DC28M10	WE10L1/2NPT71
2-2 FE-SS	P1D-T040MS-0250	DC28M11	WE10L1/2NPTCFX
2-2 FE-SSHP	P1D-T040MS-0250	DC28M14	WE10L1/2NPTMS
2-2 FH2BZ-SS	P1D-T040MS-0300	DC28M16	WE10L1/4NPT71
2-2 FH4BZ-B	P1D-T040MS-0300	DC28M18	WE10L1/4NPT71X
2-2 FH4BZ-SS	P1D-T040MS-0320	DC28M19	WE10L1/4NPTCF
2-2 FHC-B	P1D-T040MS-0320	DC28M20	WE10L1/4NPTCFX
2-2 FHC-S	P1D-T040MS-0375	DC28M22	WE10L1/4NPTMS
2-2 FHC-SS	P1D-T040MS-0375	DC28M24	WE10L1/8NPT71
2-2 FHC-SSHP	P1D-T040MS-0400	DC28M25	WE10L3/8NPT71
2-2 GBZ-B	P1D-T040MS-0400	DC28M28	WE10L3/8NPT71X
2-2 GBZ-SS	P1D-T040MS-0450	DC28S	WE10L3/8NPTCF
2-2 GH2BZ-SS	P1D-T040MS-0450	DC388456	WE10L3/8NPTCFX
2-2 HBZ-B	P1D-T040MS-0480	DC388501	WE10L3/8NPTMSX
2-2 HBZ-SS	P1D-T040MS-0480	DC42B06K	WE10LLR71
2-2 MCN-B	P1D-T040MS-0500	DC42B07K	WE10LLRCF
2-2 MCN-SS	P1D-T040MS-0500	DC42B08K	WE10LLRCFX
2-2 ME-B	P1D-T040MS-0550	DC42B11K	WE10LLRMS
2-2 ME-SS	P1D-T040MS-0550	DC42M18	WE10LM71
2-2 MHLN-SS 1.5	P1D-T040MS-0630	DC42M20	WE10LM71X
2-2 MHLN-SS 2.0	P1D-T040MS-0630	DC42M22	WE10LMCF
2-2 MHLN-SS 2.5	P1D-T040MS-0635	DC42M24	WE10LMCFX
2-2 MHLN-SS 3.0	P1D-T040MS-0635	DC42M25	WE10LMMS
2-2 MHN-6MO	P1D-T040MS-0650	DC42M28	WE10LR1/271
2-2 MHN-B	P1D-T040MS-0650	DC42M30	WE10LR1/2KEGCF
2-2 MHN-SS	P1D-T040MS-0780	DC42M32	WE10LR1/2KEGCFX
2-2 MHN-SSHP	P1D-T040MS-0780	DC42M35	WE10LR1/2KEGMS
2-2 RA-B	P1D-T040MS-0800	DC42M38	WE10LR3/871
2-2 RA-SS	P1D-T040MS-0800	DC42M42	WE10LR3/871X
2-2 SE-B	P1D-T040MS-0825	DC42S	WE10LR3/8CF
2-2 SE-SS	P1D-T040MS-0825	DC462820	WE10LR3/8CFX
2-2 SVE-B	P1D-T050AS-0675	DC462821	WE10LR3/8MS
2-2 SVE-SS	P1D-T050AS-0675	DC481038	WE10LR71
2-2 T2H2BZ-SS	P1D-T050MC-0050	DC55B16K	WE10LR71X

2-2 T2HF-B	P1D-T050MC-0050	DC55M25	WE10LRCF
2-2 T2HF-SS	P1D-T050MC-0060	DC55M30	WE10LRCFX
2-2 T2HG-B	P1D-T050MC-0060	DC55M35	WE10LRDPR71CF
2-2 T2HG-SS	P1D-T050MC-0100	DC55M38	WE10LRDPR71MS
2-2 WBZ-SS	P1D-T050MC-0100	DC55M42	WE10LRMS
2-2 XHBZ-SS	P1D-T050MC-0160	DC55S	WE10LRMSX
2-2 Z7HLZ7-SS	P1D-T050MC-0160	DC600S	WE10LRSPH71
2-2 ZHBA5-SS	P1D-T050MF-0050	DCR28PB	WE10S1/2NPT71
2-2 ZHBA-SS	P1D-T050MF-0050	DCR42PB	WE10S1/4NPT71
2-2 ZHBW-SS	P1D-T050MF-0145	DCR55PB	WE10S1/4NPT71X
2-2 ZHLW-SS	P1D-T050MF-0145	DCS1200S	WE10S1/4NPTCF
2-2 ZPC-SS	P1D-T050MF-0200	DD10-02	WE10S1/4NPTCFX
220005P1001	P1D-T050MF-0200	DD10-02	WE10S3/8NPT71
220005P1002	P1D-T050MS-0025	DD385536U010	WE10S3/8NPT71X
220005P1003	P1D-T050MS-0025	DD467425U025	WE10S3/8NPTCF
220024P0001	P1D-T050MS-0030	DDS4E25	WE10S3/8NPTCFX
220024P1006	P1D-T050MS-0030	DDU1001	WE10SM71
2200-25-00090-0000-000000	P1D-T050MS-0035	DDU1002	WE10SM71X
2200-25-00090-0000-000000	P1D-T050MS-0035	DE0-AE-C00-7A01	WE10SMCF
2200-25-00100-0000-000000	P1D-T050MS-0040	DE0-AE-C00-7A01	WE10SMCFX
2200-25-00100-0000-000000	P1D-T050MS-0040	DE0-AE-H00-7A01	WE10SR1/271
2200-25-00100-3010-000000	P1D-T050MS-0040C7110	DE0-AE-H00-7A01	WE10SR1/2CF
2200-25-00100-3010-000000	P1D-T050MS-0040C7110	DE0-DC-H00-7A01	WE10SR1/471
2200-25-00120-0000-000000	P1D-T050MS-0050	DE0-DC-H00-7A01	WE10SR1/4CF
2200-25-00120-0000-000000	P1D-T050MS-0050	DE0-DE-000-7A02	WE10SR71
2200-25-00150-0000-000000	P1D-T050MS-0050NDNNN	DE0-DE-000-7A02	WE10SR71X
2200-25-00150-0000-000000	P1D-T050MS-0050NDNNN	DE0-DE-C00-7A01	WE10SRCF
2200-25-00200-0000-000000	P1D-T050MS-0050NG112	DE0-DE-C00-7A01	WE10SRCFX
2200-25-00200-0000-000000	P1D-T050MS-0050NG112	DE0-DE-CH0-7A01	WE10SRMS
2200-25-00220-0000-000000	P1D-T050MS-0050SNNNN	DE0-DE-CH0-7A01	WE10ZLR71
2200-25-00220-0000-000000	P1D-T050MS-0050SNNNN	DE0-DE-H00-7A01	WE10ZLRCF
2200-25-00240-0000-000000	P1D-T050MS-0055	DE0-DE-H00-7A01	WE12L1/2NPT71
2200-25-00240-0000-000000	P1D-T050MS-0055	DE1-AC-000-7A01	WE12L1/2NPT71X
2200-25-00250-0010-000000	P1D-T050MS-0060	DE1-AC-000-7A01	WE12L1/2NPTCF
2200-25-00250-0010-000000	P1D-T050MS-0060	DE1-AC-H00-7A01	WE12L1/2NPTCFX
2200-25-00300-0000-000000	P1D-T050MS-0065	DE1-AC-H00-7A01	WE12L1/2NPTMS
2200-25-00300-0000-000000	P1D-T050MS-0065	DE1-AE-000-7A01	WE12L1/2NPTSPH71
2200-25-00310-0000-000000	P1D-T050MS-0065NG130	DE1-AE-000-7A01	WE12L1/4NPT71
2200-25-00310-0000-000000	P1D-T050MS-0065NG130	DE1-AE-H00-7A01	WE12L1/4NPT71X
2200-25-00315-0000-000000	P1D-T050MS-0065NG130	DE1-AE-H00-7A01	WE12L1/4NPTCF
2200-25-00315-0000-000000	P1D-T050MS-0065NG130	DE1-DE-000-7A01	WE12L1/4NPTCFX
2200-25-00320-0000-000000	P1D-T050MS-0075	DE1-DE-000-7A01	WE12L1/4NPTMS
2200-25-00320-0000-000000	P1D-T050MS-0075	DE1-DE-C00-7A01	WE12L3/8NPT71
2200-25-00340-0000-000000	P1D-T050MS-0080	DE1-DE-C00-7A01	WE12L3/8NPT71X
2200-25-00340-0000-000000	P1D-T050MS-0080	DE2-AC-000-7A01	WE12L3/8NPTCF
2200-25-00350-0000-000000	P1D-T050MS-0080NG085	DE2-AC-000-7A01	WE12L3/8NPTCFX
2200-25-00350-0000-000000	P1D-T050MS-0080NG085	DE2-AC-H00-7A01	WE12L3/8NPTMS
2200-25-00360-0000-000000	P1D-T050MS-0080NG086	DE2-AC-H00-7A01	WE12LLR71
2200-25-00360-0000-000000	P1D-T050MS-0080NG086	DE2-AC-K00-7A01	WE12LLRCF
2200-25-00400-0000-000000	P1D-T050MS-0090	DE2-AC-K00-7A01	WE12LLRCFX
2200-25-00400-0000-000000	P1D-T050MS-0090	DE2-AE-000-7A01	WE12LLRMS
2200-25-00400-2000-000000	P1D-T050MS-0100	DE2-AE-000-7A01	WE12LM71
2200-25-00400-2000-000000	P1D-T050MS-0100	DE2-AE-H00-7A01	WE12LMCF

2200-25-00400-3000-000000	P1D-T050MS-0115	DE2-AE-H00-7A01	WE12LMCFX
2200-25-00400-3000-000000	P1D-T050MS-0115	DE2-DC-000-7A01	WE12LR1/271
2200-25-00420-0000-000000	P1D-T050MS-0125	DE2-DC-000-7A01	WE12LR1/271X
2200-25-00420-0000-000000	P1D-T050MS-0125	DE2-DC-C00-7G06	WE12LR1/2CF
2200-25-00425-0000-000000	P1D-T050MS-0145NG170	DE2-DC-C00-7G06	WE12LR1/2CFX
2200-25-00425-0000-000000	P1D-T050MS-0145NG170	DE2-DE-000-7A01	WE12LR1/2MS
2200-25-00440-0000-000000	P1D-T050MS-0145NNN6N	DE2-DE-000-7A01	WE12LR1/471
2200-25-00440-0000-000000	P1D-T050MS-0145NNN6N	DE2-DE-C00-7A01	WE12LR1/471X
2200-25-00450-0000-000000	P1D-T050MS-0150	DE2-DE-C00-7A01	WE12LR1/4CF
2200-25-00450-0000-000000	P1D-T050MS-0150	DE3-AC-000-7A01	WE12LR1/4CFX
2200-25-00460-0000-000000	P1D-T050MS-0150CTNNN	DE3-AC-000-7A01	WE12LR1/4MS
2200-25-00460-0000-000000	P1D-T050MS-0150CTNNN	DE3-AC-H00-7A01	WE12LR71
2200-25-00470-0000-000000	P1D-T050MS-0150NDNNN	DE3-AC-H00-7A01	WE12LR71X
2200-25-00470-0000-000000	P1D-T050MS-0150NDNNN	DE3-AC-K00-7A01	WE12LRCF
2200-25-00470-3000-000000	P1D-T050MS-0150NG106	DE3-AC-K00-7A01	WE12LRCFX
2200-25-00470-3000-000000	P1D-T050MS-0150NG106	DE3-AE-000-7A02	WE12LRDPR71MS
2200-25-00500-0000-000000	P1D-T050MS-0160	DE3-AE-000-7A02	WE12LRMS
2200-25-00500-0000-000000	P1D-T050MS-0160	DE3-AE-K00-7A01	WE12LRMSX
2200-25-00520-0000-010000	P1D-T050MS-0160NDNNN	DE3-AE-K00-7A01	WE12LRSPH71
2200-25-00520-0000-010000	P1D-T050MS-0160NDNNN	DE3-AE-KP0-7A01	WE12S1/2NPT71
2200-25-00550-0000-000000	P1D-T050MS-0180	DE3-AE-KP0-7A01	WE12S1/2NPT71X
2200-25-00550-0000-000000	P1D-T050MS-0180	DE3-AE-P00-7A01	WE12S1/2NPTCF
2200-25-00588-3000-000000	P1D-T050MS-0200	DE3-AE-P00-7A01	WE12S1/2NPTCFX
2200-25-00588-3000-000000	P1D-T050MS-0200	DE3-DE-000-7A02	WE12S1/4NPT71
2200-25-00600-0000-000000	P1D-T050MS-0225	DE3-DE-000-7A02	WE12S1/4NPT71X
2200-25-00600-0000-000000	P1D-T050MS-0225	DE3-DE-CP0-7A01	WE12S1/4NPTCF
2200-25-00630-0000-000000	P1D-T050MS-0230	DE3-DE-CP0-7A01	WE12S1/4NPTCFX
2200-25-00630-0000-000000	P1D-T050MS-0230	DE3-DE-K00-7A01	WE12S3/8NPT71
2200-25-00640-0000-000000	P1D-T050MS-0250	DE3-DE-K00-7A01	WE12S3/8NPT71X
2200-25-00640-0000-000000	P1D-T050MS-0250	DE4-AC-000-7A01	WE12S3/8NPTCF
2200-25-00685-0000-000000	P1D-T050MS-0250NG097	DE4-AC-000-7A01	WE12S3/8NPTCFX
2200-25-00685-0000-000000	P1D-T050MS-0250NG097	DE4-AC-PK0-7A01	WE12SMCF
2200-25-00700-0000-000000	P1D-T050MS-0280	DE4-AC-PK0-7A01	WE12SMCFX
2200-25-00700-0000-000000	P1D-T050MS-0280	DE4-AE-000-7A01	WE12SR1/271
2200-25-00730-0000-0100B2	P1D-T050MS-0300	DE4-AE-000-7A01	WE12SR1/2CF
2200-25-00730-0000-0100B2	P1D-T050MS-0300	DE4-AE-KP0-7A01	WE12SR1/2CFX
2200-25-00750-0000-000000	P1D-T050MS-0320	DE4-AE-KP0-7A01	WE12SR1/471
2200-25-00750-0000-000000	P1D-T050MS-0320	DE4-AE-P00-7A01	WE12SR1/471X
2200-25-00762-0000-0100A2	P1D-T050MS-0350NG100	DE4-AE-P00-7A01	WE12SR1/4CFX
2200-25-00762-0000-0100A2	P1D-T050MS-0350NG100	DE4-DC-000-7A01	WE12SR71
2200-25-00800-0000-000000	P1D-T050MS-0380SWNNN	DE4-DC-000-7A01	WE12SR71X
2200-25-00800-0000-000000	P1D-T050MS-0380SWNNN	DE4-DE-000-7A01	WE12SRCF
2200-25-00850-0000-000000	P1D-T050MS-0400	DE4-DE-000-7A01	WE12SRCFX
2200-25-00850-0000-000000	P1D-T050MS-0400	DE4-DE-CHK-7A01	WE12SRMS
2200-25-01000-0000-000000	P1D-T050MS-0420CG126	DE4-DE-CHK-7A01	WE12ZLRCF
2200-25-01000-0000-000000	P1D-T050MS-0420CG126	DE4-DE-H00-7A01	WE12ZSRCF
2200-25-01050-0000-000000	P1D-T050MS-0500	DE4-DE-H00-7A01	WE13/06
2200-25-01050-0000-000000	P1D-T050MS-0500	DE5-AC-000-7A01	WE13/06N
2200-25-01150-0000-000000	P1D-T050MS-0600	DE5-AC-000-7A01	WE13/08
2200-25-01150-0000-000000	P1D-T050MS-0600	DE5-AC-K00-7A01	WE13/08N
2200-25-01275-0000-000000	P1D-T050MS-0610	DE5-AC-K00-7A01	WE13/10
2200-25-01275-0000-000000	P1D-T050MS-0610	DE5-AE-000-7A01	WE14S1/2NPT71
2200-25-01350-0000-000000	P1D-T050MS-0800	DE5-AE-000-7A01	WE14S1/2NPT71X

2200-25-01350-0000-000000	P1D-T050MS-0800	DE5-AE-FP0-7A01	WE14S1/2NPTCF
2200-25-01400-0000-000000	P1D-T050MS-0900	DE5-AE-FP0-7A01	WE14S1/2NPTCFX
2200-25-01400-0000-000000	P1D-T050MS-0900	DE5-AE-H00-7A01	WE14SMCF
2200-25-01800-0000-000000	P1D-T050MS-1050	DE5-AE-H00-7A01	WE14SR3/871
2200-25-01800-0000-000000	P1D-T050MS-1050	DE5-AE-HP0-7A01	WE14SR71
2200-25-02200-0000-000000	P1D-T050MS-1500NG985	DE5-AE-HP0-7A01	WE14SR71X
2200-25-02200-0000-000000	P1D-T050MS-1500NG985	DE5-AE-P00-7A01	WE14SRCF
2200-25-04000-0000-000000	P1D-T0632S-0025N0050	DE5-AE-P00-7A01	WE14SRCFX
2200-25-04000-0000-000000	P1D-T0632S-0025N0050	DE5-DC-F00-7A01	WE14SRMS
220027P0001	P1D-T0632S-0035N0025	DE5-DC-F00-7A01	WE15L1/2NPT71
220027P0002	P1D-T0632S-0035N0025	DE5-DE-000-7A01	WE15L1/2NPT71X
220027P0009	P1D-T0632S-0100	DE5-DE-000-7A01	WE15L1/2NPTCF
220031R0001	P1D-T0632S-0100	DE5-DE-CH0-7A01	WE15L1/2NPTCFX
220031R0003	P1D-T0632S-0100N0160	DE5-DE-CH0-7A01	WE15L1/2NPTMS
220031R0004	P1D-T0632S-0100N0160	DECK06L71X	WE15LM71X
220036P0110	P1D-T063AS-0200NG102	DECK06LX	WE15LMCF
220036P0111	P1D-T063AS-0200NG102	DECK08L71X	WE15LMCFX
220036P0310	P1D-T063AS-0200NG197	DECK08LX	WE15LMMS
220036P0311	P1D-T063AS-0200NG197	DECK10L71X	WE15LR3/871
220036P0410	P1D-T063AS-0200NG237	DECK10LX	WE15LR3/871X
220036P0610	P1D-T063AS-0200NG237	DECK12L71X	WE15LR3/8CF
220036P2100	P1D-T063MC-0125NG160	DECK12LX	WE15LR3/8CFX
220036P2101	P1D-T063MC-0125NG160	DECK15L71X	WE15LR71
220036P2200	P1D-T063MC-0150	DECK15LX	WE15LR71X
220036R4100	P1D-T063MC-0150	DECK18L71X	WE15LRCF
220036R4110	P1D-T063MC-0200	DECK18LX	WE15LRCFX
220046P0007	P1D-T063MC-0200	DECK22L71X	WE15LRDPR71MS
220046P0012	P1D-T063MC-0250	DECK22LX	WE15LRMS
220048P0001	P1D-T063MC-0250	DECK28L71X	WE15LRMSX
220048P0005	P1D-T063MC-0300	DECK28LX	WE15LRSPH71
220048P0007	P1D-T063MC-0300	DECK35L71X	WE15ZLR71
220048P0011	P1D-T063MS-0020	DECK35LX	WE15ZLRCF
220049R2115	P1D-T063MS-0020	DER03.A3-0	WE16S1/2NPT71
220055P0002	P1D-T063MS-0025	DER03.A3-N-BS-XXF	WE16S1/2NPT71X
220056P0100	P1D-T063MS-0025	DER05.A3-0-48B-XXF	WE16S1/2NPTCF
220056P0200	P1D-T063MS-0030	DER05.A3-0-XXF	WE16S1/2NPTCFX
220065R1610	P1D-T063MS-0030	DERMS8.B123	WE16SMCF
220065R4621	P1D-T063MS-0040	DF092C5M	WE16SMCFX
220065R4630	P1D-T063MS-0040	DF092C6M	WE16SR3/4KEGCFX
220071R0001	P1D-T063MS-0050	DF092N6M	WE16SR71
220071R0002	P1D-T063MS-0050	DF092N8M	WE16SR71X
220071R0004	P1D-T063MS-0060	DF102C6M	WE16SRCF
220071R0005	P1D-T063MS-0060	DF102N6M	WE16SRCFX
220071R0006	P1D-T063MS-0065	DF102N8M	WE16SRMS
220071R0022	P1D-T063MS-0065	DF1200S	WE18L1/2NPT71
220071R0025	P1D-T063MS-0070	DF122C14	WE18L1/2NPT71X
220084P0001	P1D-T063MS-0070	DF122C14D024HD	WE18L1/2NPTCF
220132P0112	P1D-T063MS-0080	DF122N14	WE18L1/2NPTCFX
220132P1020	P1D-T063MS-0080	DF161C40	WE18LM71
220132P1311	P1D-T063MS-0090	DF161C40D024D	WE18LMCF
220132R1640	P1D-T063MS-0090	DF20352015NVNHD651	WE18LMCFX
220132R4630	P1D-T063MS-0100	DF2035220QVNHD651	WE18LMMS
220132R6610	P1D-T063MS-0100	DF2035220QVPHD651	WE18LR3/4KEGCF

220132R6620	P1D-T063MS-0120	DF2050220QVF1HD802	WE18LR3/4KEGCFX
220147P0001	P1D-T063MS-0120	DF2089120QVPHR321	WE18LR3/871
220147P0002	P1D-T063MS-0125	DF21101035WVNXD802	WE18LR3/8KEGCFX
220147P0004	P1D-T063MS-0125	DF2110110QVPJD801	WE18LR71
220147P0006	P1D-T063MS-0140	DF2110120QVPJD801	WE18LR71X
220147P0009	P1D-T063MS-0140	DF21452060WVM3KG121	WE18LRCF
220215P0001	P1D-T063MS-0150	DF2145210QEVT1KG122	WE18LRCFX
220215P0002	P1D-T063MS-0150	DF2145210QVM3KG121	WE18LRDPR71MS
220215P0004	P1D-T063MS-0160	DF2145210QVM3KG122	WE18LRMS
220244P0001	P1D-T063MS-0160	DF2145220QVPXM262	WE18LRMSX
2203 12 00	P1D-T063MS-0160NG260	DF40110QEVPKR241	WE18LRSPH71
2207-16-16	P1D-T063MS-0160NG260	DF40110QVT1KR241	WE18ZLRCF
2207-16-16-SS	P1D-T063MS-0200	DF40120QEVPKR241	WE20S1/2NPTCFX
22-100	P1D-T063MS-0200	DF465256U001	WE20S3/4NPT71
2-210N552-90	P1D-T063MS-0200NG192	DF465257U001	WE20S3/4NPT71X
2-214N552-90	P1D-T063MS-0200NG192	DF465441U001	WE20S3/4NPTCF
2217FIL	P1D-T063MS-0220	DF4C05	WE20S3/4NPTCFX
2217FIL	P1D-T063MS-0220	DF4C05	WE20SMCF
2-217-N552-9	P1D-T063MS-0250	DF600S	WE20SMCFX
2-217-V894-9	P1D-T063MS-0250	DF600SNC	WE20SR1/2KEGCFX
2-219N552-90	P1D-T063MS-0250CNNNN	DF60120QVT1KX601	WE20SR3/4KEGCF
221FR-10	P1D-T063MS-0250CNNNN	DFBO1010FSVAFMD30S01	WE20SR3/4KEGCFX
221FR-12	P1D-T063MS-0250NDNNN	DFBO1425FSVAFGD16MA	WE20SR71
221FR-16	P1D-T063MS-0250NDNNN	DFBO1425FSVAFMD30MA	WE20SR71X
221FR-5	P1D-T063MS-0300	DFC9000100	WE20SRCF
221FR-6	P1D-T063MS-0300	DFC9000100	WE20SRCFX
221FR-8	P1D-T063MS-0320	DFH20603015NVNHX1601	WE20SRMS
221G13	P1D-T063MS-0320	DFI.900	WE22L1/2NPT71
221G13	P1D-T063MS-0350	DFK21KVERXX	WE22L3/4NPT71
221G1330	P1D-T063MS-0350	DFK26KVERXX	WE22L3/4NPT71X
221G1330	P1D-T063MS-0360	DFPH15	WE22L3/4NPTCF
221G1330-2995-481865C2	P1D-T063MS-0360	DFPH15	WE22L3/4NPTCFX
221G1330-2995-481865C2	P1D-T063MS-0400	DFR10542	WE22L3/4NPTMS
221G13-495905F4	P1D-T063MS-0400	DFR14542	WE22LM71X
221G13-495905F4	P1D-T063MS-0500	DFS1200SV	WE22LMCF
221G15	P1D-T063MS-0500	DFT980	WE22LMCFX
221G15	P1D-T063MS-0550	DFT990	WE22LR1/2KEGCF
221G1503	P1D-T063MS-0550	DFZ21KXXRXX	WE22LR3/4KEG71
221G1503	P1D-T063MS-0600	DFZ26KXXRXX	WE22LR3/4KEGCF
221G1503-2995-4818653D	P1D-T063MS-0600	DFZ48KVEEXX	WE22LR3/4KEGCFX
221G1503-2995-4818653D	P1D-T063MS-0700	DFZ93SLXRXX	WE22LR71
221G1503-2995-481865A2	P1D-T063MS-0700	DFZAKXXXRXX	WE22LR71X
221G1503-2995-481865A2	P1D-T063MS-0700NG314	DG101/06SCF	WE22LRCF
221G1503-2995-492425F4	P1D-T063MS-0700NG314	DG101/06SOMDCF	WE22LRCFX
221G1503-2995-492425F4	P1D-T063MS-0960	DG101/06ZSCF	WE22LRMS
221G1503-4270-483520P0	P1D-T063MS-0960	DG101/08SCF	WE22LRMSX
221G1503-4270-483520P0	P1D-T063VR-0400NG100	DG101/08SOMDCF	WE22ZLRCF
221G1503-4270-486265A2	P1D-T063VR-0400NG100	DG101/08ZSCF	WE25S1NPT71
221G1503-4270-486265A2	P1D-T0801S-0080N0100	DG101/12SCF	WE25S1NPT71X
221G1503-4270-486265A7	P1D-T0801S-0080N0100	DG101/12SOMDCF	WE25S1NPTCF
221G1503-4270-486265A7	P1D-T0802S-0050	DG101/12ZSCF	WE25S1NPTCFX
221G1503-4270-486265F4	P1D-T0802S-0050	DG101/16SCF	WE25SMCF
221G1503-4270-486265F4	P1D-T0802S-0100	DG101/16SOMDCF	WE25SMCFX

221G15-2995
221G15-2995
221G15-2995-4818653D
221G15-2995-4818653D
221G15-2995-481865A5
221G15-2995-481865A5
221G15-2995-481865K8
221G15-2995-481865K8
221G15-2995-483510S5
221G15-2995-483510S5
221G15-2995-492425C2
221G15-2995-492425C2
221G1530
221G1530
221G1530-2995-481865C2
221G1530-2995-481865C2
221G1530-2995-482725C2
221G1530-2995-482725C2
221G1530-492070C2
221G1530-492070C2
221G1530-492190C2
221G1530-492190C2
221G1530-495905C2
221G1530-495905C2
221G15-4270-4810003D
221G15-4270-4810003D
221G15-4270-481044A7
221G15-4270-481044A7
221G15-4270-486265C2
221G15-4270-486265C2
221G15-4270-486265F4
221G15-4270-486265F4
221G15-495905F4
221G15-495905F4
221G16
221G16
221G1603
221G1603
221G1603-2995-4818653D
221G1603-2995-4818653D
221G1603-2995-4827253D
221G1603-2995-4827253D
221G1603-2995-483510S6
221G1603-2995-483510S6
221G1610
221G1610
221G1610-2995-4818653D
221G1610-2995-4818653D
221G1610-4270-486265C2
221G1610-4270-486265C2
221G16-2995-4818653D
221G16-2995-4818653D
221G16-2995-492425C2

P1D-T0802S-0100
P1D-T080DS-0100
P1D-T080DS-0100
P1D-T080FS-0050
P1D-T080FS-0050
P1D-T080MC-0150
P1D-T080MC-0150
P1D-T080MC-0200
P1D-T080MC-0200
P1D-T080MC-0320
P1D-T080MC-0320
P1D-T080MC-0400NG310
P1D-T080MC-0400NG310
P1D-T080MF-0125SG195
P1D-T080MF-0125SG195
P1D-T080ML-0400
P1D-T080ML-0400
P1D-T080MR-0290SG100
P1D-T080MR-0290SG100
P1D-T080MS-0020
P1D-T080MS-0020
P1D-T080MS-0025
P1D-T080MS-0025
P1D-T080MS-0030
P1D-T080MS-0030
P1D-T080MS-0035
P1D-T080MS-0035
P1D-T080MS-0040
P1D-T080MS-0040
P1D-T080MS-0050
P1D-T080MS-0050
P1D-T080MS-0060
P1D-T080MS-0060
P1D-T080MS-0070
P1D-T080MS-0070
P1D-T080MS-0080
P1D-T080MS-0080
P1D-T080MS-0090
P1D-T080MS-0090
P1D-T080MS-0100
P1D-T080MS-0100
P1D-T080MS-0100C5NNN
P1D-T080MS-0100C5NNN
P1D-T080MS-0100NDNNN
P1D-T080MS-0100NDNNN
P1D-T080MS-0125
P1D-T080MS-0125
P1D-T080MS-0150
P1D-T080MS-0150
P1D-T080MS-0160
P1D-T080MS-0160
P1D-T080MS-0170
P1D-T080MS-0170

DG101/16SUNGCF
DG101/16ZSCF
DG101/20SCF
DG101/20SOMDCF
DG101/20ZSCF
DG101/25SCF
DG101/25SOMDCF
DG101/25ZSCF
DG101/30SCF
DG101/30SOMDCF
DG101/30ZSCF
DG101/38SCF
DG101/38SOMDCF
DG101/38ZSCF
DG102/06SMCF
DG102/06SMOMDCF
DG102/06SRCF
DG102/06SROMDCF
DG102/06ZSMCF
DG102/06ZSRCF
DG102/08SMCF
DG102/08SMOMDCF
DG102/08SRCF
DG102/08SROMDCF
DG102/08SRVITCF
DG102/08SRVITOMDCF
DG102/08ZSMCF
DG102/08ZSRCF
DG102/12SMCF
DG102/12SMOMDCF
DG102/12SMVITOMDCF
DG102/12SRCF
DG102/12SROMDCF
DG102/12SRVITCF
DG102/12ZSMCF
DG102/12ZSMVITCF
DG102/12ZSRCF
DG102/16SMCF
DG102/16SMOMDCF
DG102/16SRCF
DG102/16SROMDCF
DG102/16SRVITCF
DG102/16SRVITOMDCF
DG102/16ZSMCF
DG102/16ZSRCF
DG102/20SMCF
DG102/20SMOMDCF
DG102/20SRCF
DG102/20SROMDCF
DG102/20SRVITCF
DG102/20SRVITOMDCF
DG102/20ZSMCF
DG102/20ZSRCF

WE25SR71
WE25SR71X
WE25SRCF
WE25SRCFX
WE25SRMS
WE28L1NPT71
WE28L1NPT71X
WE28L1NPTCF
WE28L1NPTCFX
WE28L1NPTMS
WE28LMCF
WE28LMCFX
WE28LR1KEG71
WE28LR1KEGCFX
WE28LR3/4KEGCFX
WE28LR71
WE28LR71X
WE28LRCF
WE28LRCFX
WE28LRMS
WE28ZLRCF
WE3-005-10M060/075/11/23
WE30S11/4NPT71
WE30S11/4NPT71X
WE30S11/4NPTCF
WE30S11/4NPTCFX
WE30SMCF
WE30SR71
WE30SR71X
WE30SRCF
WE30SRCFX
WE30SRMS
WE35L11/4NPTCF
WE35L11/4NPTCFX
WE35LMCFX
WE35LR11/4KEGCFX
WE35LR71
WE35LR71X
WE35LRCF
WE35LRCFX
WE35LRMS
WE38S11/2NPT71
WE38S11/2NPT71X
WE38S11/2NPTCF
WE38S11/2NPTCFX
WE38SMCF
WE38SR71
WE38SR71X
WE38SRCF
WE38SRCFX
WE4-008-10M080/100/14/30
WE42L11/2NPTCF
WE42L11/2NPTCFX

221G16-2995-492425C2	P1D-T080MS-0200	DG102/25SMCF	WE42LMCF
221G1630	P1D-T080MS-0200	DG102/25SMOMDCF	WE42LMCFX
221G1630	P1D-T080MS-0200N5NNN	DG102/25SRCF	WE42LR11/2KEGCFX
221G1630-2995-481865C2	P1D-T080MS-0200N5NNN	DG102/25SROMDCF	WE42LR71
221G1630-2995-481865C2	P1D-T080MS-0210	DG102/25SRVITOMDCF	WE42LR71X
221G1631	P1D-T080MS-0210	DG102/25ZSMCF	WE42LRCF
221G1631	P1D-T080MS-0240NG179	DG102/25ZSRCF	WE42LRCFX
221G1631-2995-481865C2	P1D-T080MS-0240NG179	DG102/28LROMDCF	WE42LRMS
221G1631-2995-481865C2	P1D-T080MS-0250	DG102/30SMCF	WE42ZLR11/2KEGCF
221G16-495905F4	P1D-T080MS-0250	DG102/30SMOMDCF	WE6PB10
221G16-495905F4	P1D-T080MS-0300	DG102/30SRCF	WE6PB12
221G17	P1D-T080MS-0300	DG102/30SROMDCF	WE6PB6
221G17	P1D-T080MS-0300NDNNN	DG102/30ZSMCF	WE6PB8
221G1703	P1D-T080MS-0300NDNNN	DG102/30ZSRCF	WE6PK6
221G1703	P1D-T080MS-0320	DG102/35LROMDCF	WE6PK8
221G1703-2995-4818653D	P1D-T080MS-0320	DG102/38SMCF	WEE04LLM10X1ORCF
221G1703-2995-4818653D	P1D-T080MS-0320NG130	DG102/38SMOMDCF	WEE04LLM10X1OROMDCF
221G1703-4270-4810003D	P1D-T080MS-0320NG130	DG102/38SRCF	WEE04LLMORCF
221G1703-4270-4810003D	P1D-T080MS-0325	DG102/38SROMDCF	WEE04LLMOROMDCF
221G1703-4270-486265C2	P1D-T080MS-0325	DG102/38ZSMCF	WEE04LLRCF
221G1703-4270-486265C2	P1D-T080MS-0350	DG102/38ZSRCF	WEE04LLROMDCF
221G1710	P1D-T080MS-0350	DG102/42LROMDCF	WEE04ZLLM10X1ORCF
221G1710	P1D-T080MS-0400	DG102/SR1/2VIG/AGCF	WEE04ZLLMORCF
221G1710-4270-486265C2	P1D-T080MS-0400	DG102/SR1/4VIG/AGCF	WEE04ZLLRCF
221G1710-4270-486265C2	P1D-T080MS-0400NG110	DG102/SR1/8VIG/AGCF	WEE06L7/16UNFCF
221G17-2995-483510S6	P1D-T080MS-0400NG110	DG102/SR1VITIG/AGCF	WEE06L7/16UNFOMDCF
221G17-2995-483510S6	P1D-T080MS-0430	DG102/SR3/4VIG/AGCF	WEE06LLM12X1.5ORCF
221G1730	P1D-T080MS-0430	DG102/SR3/8VIG/AGCF	WEE06LLMORCF
221G1730	P1D-T080MS-0500	DG103/06SCF	WEE06LLMOROMDCF
221G1730-2995-481865C2	P1D-T080MS-0500	DG103/06SOMDCF	WEE06LLRCF
221G1730-2995-481865C2	P1D-T080MS-0540	DG103/06ZSCF	WEE06LLROMDCF
221G21	P1D-T080MS-0540	DG103/08SCF	WEE06LMCF
221G21	P1D-T080MS-0550	DG103/08SOMDCF	WEE06LMOMDCF
221G2103	P1D-T080MS-0550	DG103/08ZSCF	WEE06LMORCF
221G2103	P1D-T080MS-0600	DG103/12SCF	WEE06LMOROMDCF
221G2103-2995-483510S6	P1D-T080MS-0600	DG103/12SOMDCF	WEE06LR1/4OMDCF
221G2103-2995-483510S6	P1D-T080MS-0600FXNNN	DG103/12ZSCF	WEE06LRB71
221G2103-4270-486265C2	P1D-T080MS-0600FXNNN	DG103/16SCF	WEE06LRBOMD71
221G2103-4270-486265C2	P1D-T080MS-0720	DG103/16SOMDCF	WEE06LRCF
221G2106	P1D-T080MS-0720	DG103/16ZSCF	WEE06LROMDCF
221G2106	P1D-T080MS-0750	DG103/20SCF	WEE06LRVITOMDCF
221G2110	P1D-T080MS-0750	DG103/20SOMDCF	WEE06S7/16UNFCF
221G2110	P1D-T080MS-0950	DG103/20ZSCF	WEE06S7/16UNFOMDCF
221G21-2995-4818653D	P1D-T080MS-0950	DG103/25SCF	WEE06SMCF
221G21-2995-4818653D	P1D-T080MS-1000NG440	DG103/25SOMDCF	WEE06SMOMDCF
221G2130	P1D-T080MS-1000NG440	DG103/25ZSCF	WEE06SMVITCF
221G2130	P1D-T080MS-1200	DG103/30SCF	WEE06SMVITOMDCF
221G2130-2995-481865C2	P1D-T080MS-1200	DG103/30SMFQOMDCF	WEE06SRB71
221G2130-2995-481865C2	P1D-T080MS-1210	DG103/30SOMDCF	WEE06SRBOMD71
221G2131	P1D-T080MS-1210	DG103/30ZSCF	WEE06SRCF
221G2131	P1D-T080MS-1400	DG103/38SCF	WEE06SROMDCF
221G2131-2995-481865C2	P1D-T080MS-1400	DG103/38SOMDCF	WEE06ZL7/16UNFCF
221G2131-2995-481865C2	P1D-T080MS-2310	DG103/38ZSCF	WEE06ZLLRCF

221G2136-2995-481865C2	P1D-T080MS-2310	DG104/06SMCF	WEE06ZLMCF
221G2136-2995-481865C2	P1D-T1002S-0100	DG104/06SMOMDCF	WEE06ZLMORCF
221G2136-492070C2	P1D-T1002S-0100	DG104/06SMSA1CF	WEE06ZLRB71
221G2136-492070C2	P1D-T100AS-0100	DG104/06SRCF	WEE06ZLRCF
221G21-4270-486265C2	P1D-T100AS-0100	DG104/06SROMDCF	WEE06ZSRCF
221G21-4270-486265C2	P1D-T100FC-0750	DG104/06SROMDVITCF	WEE08L7/16UNFCF
221G23	P1D-T100FC-0750	DG104/06ZSMCF	WEE08L7/16UNFOMDCF
221G23	P1D-T100FF-0020	DG104/06ZSRCF	WEE08LMCF
221G2330	P1D-T100FF-0020	DG104/08SMCF	WEE08LMOMD71
221G2330	P1D-T100FS-0050	DG104/08SMOMDCF	WEE08LMOMDCF
221G2330-2995-481865C2	P1D-T100FS-0050	DG104/08SRCF	WEE08LMORCF
221G2330-2995-481865C2	P1D-T100MC-0080	DG104/08SROMDCF	WEE08LMOROMDCF
221G2330-2995-492726C2	P1D-T100MC-0080	DG104/08ZSMCF	WEE08LMVITOMDCF
221G2330-2995-492726C2	P1D-T100MF-0060	DG104/08ZSRCF	WEE08LMVITOMDVOLCF
221G2330-495905C2	P1D-T100MF-0060	DG104/12SMCF	WEE08LRB71
221G2330-495905C2	P1D-T100MF-0090	DG104/12SMOMDCF	WEE08LRBOMD71
221G23-4270-4810003D	P1D-T100MF-0090	DG104/12SMVITOMDCF	WEE08LRCF
221G23-4270-4810003D	P1D-T100MF-0100	DG104/12SRCF	WEE08LROMDCF
221G25	P1D-T100MF-0100	DG104/12SROMDCF	WEE08LRVITOMDCF
221G25	P1D-T100MF-0150	DG104/12SRVITCF	WEE08S9/16UNFCF
221G2523	P1D-T100MF-0150	DG104/12SRVITOMDCF	WEE08S9/16UNFOMDCF
221G2523	P1D-T100MF-0240	DG104/12ZSMCF	WEE08SMCF
221G2523-852025-483824T1	P1D-T100MF-0240	DG104/12ZSMVITCF	WEE08SMOMDCF
221G2523-852025-483824T1	P1D-T100MF-0250	DG104/12ZSRCF	WEE08SMORCF
221G25-2995-4818653D	P1D-T100MF-0250	DG104/16SMCF	WEE08SMOROMDCF
221G25-2995-4818653D	P1D-T100MF-0390	DG104/16SMOMDCF	WEE08SMORVITOMDCF
221G25-2995-481865A5	P1D-T100MF-0390	DG104/16SRCF	WEE08SMVITCF
221G25-2995-481865A5	P1D-T100MF-0400CG275	DG104/16SROMDCF	WEE08SRB71
221G25-2995-4827253D	P1D-T100MF-0400CG275	DG104/16ZSMCF	WEE08SRBOMD71
221G25-2995-4827253D	P1D-T100MF-0400NDNNN	DG104/16ZSRCF	WEE08SRCF
221G2530	P1D-T100MF-0400NDNNN	DG104/20SMCF	WEE08SROMDCF
221G2530	P1D-T100MF-0700T7160	DG104/20SMOMDCF	WEE08ZL7/16UNFCF
221G2530-2995	P1D-T100MF-0700T7160	DG104/20SRCF	WEE08ZLMCF
221G2530-2995	P1D-T100MS-0025	DG104/20SROMDCF	WEE08ZLMNBR71
221G2530-2995-481865C2	P1D-T100MS-0025	DG104/20SRVITCF	WEE08ZLMORCF
221G2530-2995-481865C2	P1D-T100MS-0040	DG104/20SSTL1CF	WEE08ZLRB71
221G2530-2995-492425C2	P1D-T100MS-0040	DG104/20ZSMCF	WEE08ZLRCF
221G2530-2995-492425C2	P1D-T100MS-0050	DG104/20ZSRCF	WEE08ZSMORCF
221G2530-2995-495870C2	P1D-T100MS-0050	DG104/25SMCF	WEE08ZSRB71
221G2530-2995-495870C2	P1D-T100MS-0075	DG104/25SMOMDCF	WEE08ZSRCF
221G2530-492190C2	P1D-T100MS-0075	DG104/25SRCF	WEE10L9/16UNFCF
221G2530-492190C2	P1D-T100MS-0080	DG104/25SROMDCF	WEE10L9/16UNFOMDCF
221G25-4270-4810003D	P1D-T100MS-0080	DG104/25ZSMCF	WEE10LM16OROMDCF
221G25-4270-4810003D	P1D-T100MS-0100	DG104/25ZSRCF	WEE10LMCF
221G25-4270-486265B7	P1D-T100MS-0100	DG104/30SMCF	WEE10LMOMD71
221G25-4270-486265B7	P1D-T100MS-0100NCNNN	DG104/30SMMFQOMDCF	WEE10LMOMDCF
221G25-4270-486265C2	P1D-T100MS-0100NCNNN	DG104/30SMOMDCF	WEE10LMORCF
221G25-4270-486265C2	P1D-T100MS-0125	DG104/30SMVITOMDCF	WEE10LMOROMD71
221G25-495905F4	P1D-T100MS-0125	DG104/30SRCF	WEE10LMOROMDCF
221G25-495905F4	P1D-T100MS-0130	DG104/30SROMDCF	WEE10LMORVITOMDCF
221G26	P1D-T100MS-0130	DG104/30ZSMCF	WEE10LRB71
221G26	P1D-T100MS-0150	DG104/30ZSRCF	WEE10LRBOMD71
221G26-2995-4818653D	P1D-T100MS-0150	DG104/38SMCF	WEE10LRCF

221G26-2995-4818653D
221G2630
221G2630
221G2630-2995
221G2630-2995
221G2630-495905C2
221G2630-495905C2
221G26-4270-4810003D
221G26-4270-4810003D
221G26-4270-481000B2
221G26-4270-481000B2
221G26-4270-481044F4
221G26-4270-481044F4
221G26-4538-4862650P
221G26-4538-4862650P
221G26-4538-486265A7
221G26-4538-486265A7
221G26-4538-486265C2
221G26-4538-486265C2
221G27
221G27
221G2704
221G2704
221G27-4270-481000A2
221G27-4270-481000A2
221G27-4270-481044F4
221G27-4270-481044F4
221G27-495905F4
221G27-495905F4
221GS8052Q
221GS8052Q
221J3301E
221J3301E
221J3301E-299560
221J3301E-299560
221J3301E-299560-483816C2
221J3301E-299560-483816C2
221J3315E
221J3315E
221JS8478B-495935C2
221JS8478B-495935C2
221RCAJP-A5XD
221S15E
221S15E
221S15F
221S15F
221S20E
221S20E
221S25F
221S25F
221XCAJP-A3XK
221XCAJP-W3XK
221ZCAKP-M4XD

P1D-T100MS-0150NG190
P1D-T100MS-0150NG190
P1D-T100MS-0160
P1D-T100MS-0160
P1D-T100MS-0170HNNNN
P1D-T100MS-0170HNNNN
P1D-T100MS-0200
P1D-T100MS-0200
P1D-T100MS-0210
P1D-T100MS-0210
P1D-T100MS-0220
P1D-T100MS-0220
P1D-T100MS-0230
P1D-T100MS-0230
P1D-T100MS-0250
P1D-T100MS-0250
P1D-T100MS-0250CG111
P1D-T100MS-0250CG111
P1D-T100MS-0250NG190
P1D-T100MS-0250NG190
P1D-T100MS-0250YG111
P1D-T100MS-0250YG111
P1D-T100MS-0300
P1D-T100MS-0300
P1D-T100MS-0300SG150
P1D-T100MS-0300SG150
P1D-T100MS-0320
P1D-T100MS-0320
P1D-T100MS-0330N3KNN
P1D-T100MS-0330N3KNN
P1D-T100MS-0350
P1D-T100MS-0350
P1D-T100MS-0350NHNNN
P1D-T100MS-0350NHNNN
P1D-T100MS-0370
P1D-T100MS-0370
P1D-T100MS-0400
P1D-T100MS-0400
P1D-T100MS-0400NG115
P1D-T100MS-0400NG115
P1D-T100MS-0400NG117
P1D-T100MS-0400NG117
P1D-T100MS-0400NG180
P1D-T100MS-0400NG180
P1D-T100MS-0450
P1D-T100MS-0450
P1D-T100MS-0470
P1D-T100MS-0470
P1D-T100MS-0500
P1D-T100MS-0500
P1D-T100MS-0500NG115
P1D-T100MS-0500NG115
P1D-T100MS-0500NG300

DG104/38SMOMDCF
DG104/38SMVITOMDCF
DG104/38SRCF
DG104/38SROMDCF
DG104/38ZSMCF
DG104/38ZSRCF
DG105/12SCF
DG105/12SOMDCF
DG105/12ZSCF
DG105/16SCF
DG105/16SOMDCF
DG105/16ZSCF
DG105/20SCF
DG105/20SOMDCF
DG105/20ZSCF
DG105/25SCF
DG105/25SOMDCF
DG105/25STN3OMDCF
DG105/25ZSCF
DG105/30SCF
DG105/30SOMDCF
DG105/30STN3OMDCF
DG105/30ZSCF
DG105/38SCF
DG105/38SOMDCF
DG105/38STN3OMDCF
DG105/38ZSCF
DG106/12SMCF
DG106/12SMOMDCF
DG106/12SRCF
DG106/12SROMDCF
DG106/12ZSMCF
DG106/12ZSRCF
DG106/16SMCF
DG106/16SMOMDCF
DG106/16SRCF
DG106/16SROMDCF
DG106/16ZSMCF
DG106/16ZSRCF
DG106/20SMCF
DG106/20SMOMDCF
DG106/20SRCF
DG106/20SROMDCF
DG106/20ZSMCF
DG106/20ZSRCF
DG106/25SMCF
DG106/25SMOMDCF
DG106/25SRCF
DG106/25SROMDCF
DG106/25ZSMCF
DG106/25ZSRCF
DG106/30SMCF
DG106/30SMOMDCF

WEE10LROMDCF
WEE10LRVITOMDCF
WEE10S9/16UNFCF
WEE10S9/16UNFOMDCF
WEE10S9/16UNFOMDNBR71
WEE10SMCF
WEE10SMOMDCF
WEE10SMOROMDCF
WEE10SR1/4BOMD71
WEE10SR1/4OMDCF
WEE10SR1/8OMDCF
WEE10SRB71
WEE10SRBOMD71
WEE10SRCF
WEE10SROMDCF
WEE10SRVITCF
WEE10ZL9/16UNFCF
WEE10ZLMCF
WEE10ZLRB71
WEE10ZLRCF
WEE10ZLRSSACF
WEE10ZSRB71
WEE10ZSRCF
WEE12L3/4UNF71
WEE12L3/4UNFCF
WEE12L3/4UNFOMDCF
WEE12L9/16UNFCF
WEE12L9/16UNFOMDCF
WEE12LM14ORVITOMDCF
WEE12LM18X1.5OMDCF
WEE12LM71
WEE12LMCF
WEE12LMOMD71
WEE12LMOMDCF
WEE12LMORCF
WEE12LMOROMDCF
WEE12LR1/2OMDCF
WEE12LR1/4OMDCF
WEE12LRB71
WEE12LRBOMD71
WEE12LRCF
WEE12LROMDCF
WEE12LRVITOMDCF
WEE12S3/4UNFCF
WEE12S3/4UNFOMDCF
WEE12SMCF
WEE12SMOMD71
WEE12SMOMDCF
WEE12SMOROMDCF
WEE12SMVITOMDCF
WEE12SR1/2BOMD71
WEE12SR1/2OMDCF
WEE12SR1/4BOMD71

221ZEAKP-A4XD	P1D-T100MS-0500NG300	DG106/30SRCF	WEE12SR1/4OMDCF
221ZEAKP-W4XD	P1D-T100MS-0550	DG106/30SROMDCF	WEE12SRB71
2-2-2 FT-B	P1D-T100MS-0550	DG106/30ZSMCF	WEE12SRBOMD71
2-2-2 FT-SS	P1D-T100MS-0550NG679	DG106/30ZSRCF	WEE12SRCF
2-2-2 FT-SSHP	P1D-T100MS-0550NG679	DG106/38SMCF	WEE12SROMDCF
2-2-2 JBZ-B	P1D-T100MS-0630	DG106/38SMOMDCF	WEE12ZL3/4UNF71
2-2-2 JBZ-SS	P1D-T100MS-0630	DG106/38SRCF	WEE12ZL3/4UNFCF
2-2-2 MBT-SS	P1D-T100MS-0700	DG106/38SROMDCF	WEE12ZL9/16UNFCF
2-2-2 MBZ-SS	P1D-T100MS-0700	DG106/38SRVITOMDCF	WEE12ZLMCF
2-2-2 MT-SS	P1D-T100MS-0750NG445	DG106/38ZSMCF	WEE12ZLMNBR71
2-2-2 OBZ-B	P1D-T100MS-0750NG445	DG106/38ZSRCF	WEE12ZLRB71
2-2-2 OBZ-SS	P1D-T100MS-0800	DG107/06SCF	WEE12ZLRCF
2-2-2 RBZ-SS	P1D-T100MS-0800	DG107/06SOMDCF	WEE12ZSRB71
2-2-2 SBZ-SS	P1D-T100MS-0860	DG107/06ZSCF	WEE12ZSRCF
2-2-2 ST-SS	P1D-T100MS-0860	DG107/06ZSVITCF	WEE14SROMDCF
2221FIL	P1D-T100MS-1000	DG107/08SCF	WEE15L3/4UNFCF
2221FIL	P1D-T100MS-1000	DG107/08SOMDCF	WEE15L3/4UNFOMDCF
2-222-N552-9	P1D-T100MS-1100	DG107/08ZSCF	WEE15L7/8UNF71
2-222N552-90	P1D-T100MS-1100	DG107/12SCF	WEE15L7/8UNFCF
2-222-V894-9	P1D-T100MS-1200NDNNN	DG107/12SOMDCF	WEE15L7/8UNFOMDCF
2-224-N552-9	P1D-T100MS-1200NDNNN	DG107/12ZSCF	WEE15LMCF
2-224-V894-9	P1D-T100MS-1500	DG107/16SCF	WEE15LMOMD71
2-225N552-90	P1D-T100MS-1500	DG107/16SOMDCF	WEE15LMOMDCF
2-228N552-90	P1D-T100MS-1510	DG107/16ZSCF	WEE15LMORCF
222P-4-2	P1D-T100MS-1510	DG107/20SCF	WEE15LMOROMDCF
222P-6-4	P1D-T100MS-1600	DG107/20SOMDCF	WEE15LMVITOMDCF
222P-8-6	P1D-T100MS-1600	DG107/20ZSCF	WEE15LMVITOMDCFBP
2239FIL	P1D-T100MS-1750	DG107/20ZSVITCF	WEE15LMVITOMDVOLCF
2239FIL	P1D-T100MS-1750	DG107/25SCF	WEE15LRB71
223FIL	P1D-T100MS-1800	DG107/25SOMDCF	WEE15LRBOMD71
223FIL	P1D-T100MS-1800	DG107/25ZSCF	WEE15LRCF
223FIL	P1D-T125/S50984	DG107/30SCF	WEE15LROMDCF
223FIL	P1D-T125/S50984	DG107/30SOMDCF	WEE15LRVITOMDCF
2240D-025V32	P1D-T1252S-0320N0500	DG107/30ZSCF	WEE15ZL3/4UNFCF
2240D-025V32-DL	P1D-T1252S-0320N0500	DG107/38SCF	WEE15ZL7/8UNFCF
2240D-025V32-TC	P1D-T125CC-0320	DG107/38SOMDCF	WEE15ZL7/8UNFVITCF
2240D-02V32	P1D-T125CC-0320	DG107/38ZSCF	WEE15ZLMCF
2240D-02V32-TC	P1D-T125MC-0050N7195	DG107/42LOMDCF	WEE15ZLMNBR71
2240D-03V32	P1D-T125MC-0050N7195	DG108/06SCF	WEE15ZLRB71
2240D-03V32-DL	P1D-T125MC-0060	DG108/06SOMDCF	WEE15ZLRCF
2240D-03V32-TC	P1D-T125MC-0060	DG108/06ZSCF	WEE16S7/8UNFCF
2240D-04V32	P1D-T125MC-0300	DG108/08SCF	WEE16S7/8UNFOMDCF
2240D-04V32-DL	P1D-T125MC-0300	DG108/08SOMDCF	WEE16SMCF
2240D-04V32-TC	P1D-T125MC-0450	DG108/08ZSCF	WEE16SMOMDCF
2240D-05V32	P1D-T125MC-0450	DG108/12SCF	WEE16SMORCF
2240D-05V32-TC	P1D-T125MC-0570	DG108/12SOMDCF	WEE16SMOROMDCF
2240N-04V31	P1D-T125MC-0570	DG108/12ZSCF	WEE16SR3/4BOMD71
2244N-025-025V00V00	P1D-T125MF-0100	DG108/16SCF	WEE16SR3/4OMDCF
2244N-025V00	P1D-T125MF-0100	DG108/16SOMDCF	WEE16SR3/8BOMD71
2244N-025V00-DL	P1D-T125MF-0125	DG108/16ZSCF	WEE16SR3/8OMDCF
2244N-025V00-P	P1D-T125MF-0125	DG108/20SCF	WEE16SRB71
2244N-06V00	P1D-T125MF-0250	DG108/20SOMDCF	WEE16SRBOMD71
2244N-06V00-DL	P1D-T125MF-0250	DG108/20ZSCF	WEE16SRCF

2244N-06V00-P	P1D-T125MF-0650	DG108/25SCF	WEE16SREDOMDCF
2244N-06V10W	P1D-T125MF-0650	DG108/25SOMDCF	WEE16SROMDCF
2244N-08V10	P1D-T125MS-0025	DG108/25ZSCF	WEE16ZS7/8UNFCF
2244N-08V10-DL	P1D-T125MS-0025	DG108/30SCF	WEE16ZSM71
2244N-08V10-P	P1D-T125MS-0025SG168	DG108/30SOMDCF	WEE16ZSRB71
2244N-08V10W	P1D-T125MS-0025SG168	DG108/30ZSCF	WEE16ZSRCF
2244N-12V30	P1D-T125MS-0050	DG108/38SCF	WEE18L11/16UNCF
2244N-20V30	P1D-T125MS-0050	DG108/38SOMDCF	WEE18L11/16UNOMDCF
2244N-20V30-DL	P1D-T125MS-0075	DG108/38ZSCF	WEE18L7/8UNFCF
2244N-20V30-P	P1D-T125MS-0075	DG208/12SRCF	WEE18L7/8UNFOMDCF
2245D-03V32	P1D-T125MS-0080	DG208/12SROMDCF	WEE18LMCF
2245D-04V32	P1D-T125MS-0080	DG208/16SRCF	WEE18LMOMD71
2245N-04V00	P1D-T125MS-0100	DG208/16SROMDVITCF	WEE18LMOMDCF
2245N-04V00-DL	P1D-T125MS-0100	DG208/20SRCF	WEE18LMORCF
2245N-04V00-LL	P1D-T125MS-0125	DG208/25SRCF	WEE18LMOROMDCF
2245N-04V00-P	P1D-T125MS-0125	DGK102/R3/4OMDCF	WEE18LMORVITOMDCF
2245N-04V00-RL	P1D-T125MS-0160	DH082A	WEE18LMVITOMDCF
2245N-04V30	P1D-T125MS-0160	DH103A	WEE18LR3/4OMDCF
2245N-04V30-P	P1D-T125MS-0200	DH103A04	WEE18LRB71
2245N-04V45	P1D-T125MS-0200	DH103A16	WEE18LRBOMD71
2245N-04V45-DL	P1D-T125MS-0250	DH103B04	WEE18LRCF
2245N-05-05V00V00	P1D-T125MS-0250	DH103BV	WEE18LRDPR71CF
2245N-05V00	P1D-T125MS-0300	DH103C	WEE18LROMDCF
2245N-05V00-DL	P1D-T125MS-0300	DH103C16	WEE18LRVITCF
2245N-05V00-P	P1D-T125MS-0320	DH103E	WEE18LRVITOMDCF
2245N-05V00-RL	P1D-T125MS-0320	DHX608KXXKXB	WEE18ZL11/16UNCF
2245N-05V30	P1D-T125MS-0400	DHX608KXXKXR	WEE18ZL7/8UNFCF
2245N-05V30-P	P1D-T125MS-0400	DHX608KXXKXS	WEE18ZLMCF
2245N-05V45	P1D-T125MS-0420NG150	DHX608SXXKXB	WEE18ZLRB71
2245N-06V00	P1D-T125MS-0420NG150	DHX608SXXKXR	WEE18ZLRCF
2245N-06V00-DL	P1D-T125MS-0440	DHX608SXXKXS	WEE20S11/16UNCF
2245N-06V00-RL	P1D-T125MS-0440	DHX612KXXKXB	WEE20S11/16UNOMDCF
2245N-06V30	P1D-T125MS-0500	DHX612KXXKXR	WEE20SMOMD71
2245N-06V30-P	P1D-T125MS-0500	DHX612KXXKXS	WEE20SMOMDCF
2245N-06V45	P1D-T125MS-1000	DHX612SXXKXB	WEE20SMORCF
2245N-06V45-DL	P1D-T125MS-1000	DHX612SXXKXR	WEE20SMOROMDCF
2245N-08-08V00V00	P1D-T160MF-0250NG295	DHX612SXXKXS	WEE20SRB71
2245N-08V00	P1D-T160MF-0250NG295	DI86V	WEE20SRBOMD71
2245N-08V00-DL	P1D-T160MF-0350	DI87V	WEE20SRCF
2245N-08V00-P	P1D-T160MF-0350	DI88V	WEE20SREDOMDCF
2245N-08V00-RL	P1D-T160MS-0060NDNNN	DICH06LTEFX	WEE20SROMDCF
2245N-08V30	P1D-T160MS-0060NDNNN	DICH06LVITX	WEE20ZSMCF
2245N-10V30	P1D-T160MS-0080	DICH06LX	WEE20ZSMORCF
2245N-10V30-DL	P1D-T160MS-0080	DICH08LTEFX	WEE20ZSRB71
2245N-12V30	P1D-T160MS-0100	DICH08LVITX	WEE20ZSRCF
2245N-12V30-DL	P1D-T160MS-0100	DICH08LX	WEE22L11/16UNCF
2245N-16V30	P1D-T160MS-0125	DICH10LTEFX	WEE22L11/16UNOMDCF
2245N-16V30-DL	P1D-T160MS-0125	DICH10LVITX	WEE22LM27X2CF
2245N-16V30-P	P1D-T160MS-0140	DICH10LX	WEE22LM27X2OMDCF
2246F-04V70	P1D-T160MS-0140	DICH12LTEFX	WEE22LM27X2ORCF
2246F-05V70	P1D-T160MS-0160	DICH12LVITX	WEE22LM27X2OROMDCF
2246F-06V70	P1D-T160MS-0160	DICH12LX	WEE22LM27X2ORVOMDCF
2246F-08V70	P1D-T160MS-0200	DICH15LTEFX	WEE22LRB71

2246F-10V70	P1D-T160MS-0200	DICH15LVITX	WEE22LRBOMD71
2246F-12V70	P1D-T160MS-0200NG150	DICH15LX	WEE22LRCF
2246F-16V70	P1D-T160MS-0200NG150	DICH18LTEFX	WEE22LROMDCF
226 BLADE-SS	P1D-T160MS-0250	DICH18LVITX	WEE22LRVITCF
226 DEBURR-SS	P1D-T160MS-0250	DICH18LX	WEE22LRVITOMDCF
2262FIL	P1D-T160MS-0400	DICH22LTEFX	WEE22ZL11/16UNCF
2262FIL	P1D-T160MS-0400	DICH22LVITX	WEE22ZLRB71
2267FIL	P1D-T160MS-0430NDNNN	DICH22LX	WEE22ZLRCF
2267FIL	P1D-T160MS-0430NDNNN	DICH28LTEFX	WEE22ZLRSSACF
226A	P1D-T160MS-0500	DICH28LVITX	WEE25S11/16UNCF
226A BLADES	P1D-T160MS-0500	DICH28LX	WEE25S11/16UNOMDCF
2270 21 00	P1D-T160MS-0600	DICH35LVITX	WEE25S15/16UNOMDCF
2271FIL	P1D-T160MS-0600	DICH35LX	WEE25SM27X2OROMDCF
2271FIL	P1D-T160MS-0800	DICHDG06/08	WEE25SMOMDCF
2272 12 21	P1D-T160MS-0800	DICHDG12/16	WEE25SMORCF
2272 12 27	P1D-T160MS-0900	DICHDG20/25	WEE25SMOROMDCF
2272 12 34	P1D-T160MS-0900	DICHDG30/38	WEE25SR3/4OMDCF
2272 18 34	P1D-T160MS-1000	DICHRGVDHB06SX	WEE25SRB71
2273FIL	P1D-T160MS-1000	DIE-304	WEE25SRBOMD71
2273FIL	P1D-T160MS-1400	DIE-305	WEE25SRCF
2278FIL	P1D-T160MS-1400	DIE-306	WEE25SROMDCF
2278FIL	P1D-T160MS-1500	DIE-308	WEE25SRVITOMDCF
2281FIL	P1D-T160MS-1500	DIE-312	WEE25ZS11/16UNCF
2281FIL	P1D-T160MS-2000	DIE-H12	WEE25ZSMCF
2-2829S	P1D-T160MS-2000	DIG04544R203	WEE25ZSRB71
2284FIL	P1D-T200MF-1280	DIG04546R203	WEE25ZSRCF
2284FIL	P1D-T200MF-1280	DIN RAIL KIT	WEE28L15/16UNCF
2287FIL	P1D-T200MS-0025	DIN7980M16VZX	WEE28L15/16UNOMDCF
2287FIL	P1D-T200MS-0025	DIN-CASE	WEE28LMCF
2292 12 00	P1D-T200MS-0100	DK04/04	WEE28LMOMD71
2293 12 00	P1D-T200MS-0100	DK-05-30	WEE28LMOMDCF
2294 12 17	P1D-T200MS-0200	DK06/06	WEE28LMORCF
2294 12 21	P1D-T200MS-0200	DK-1/16NPT	WEE28LMOROMDCF
2294 12 27	P1D-T200MS-0230NG165	DK-1/16NPT-00	WEE28LRB71
2294 12 34	P1D-T200MS-0230NG165	DK-1/16NPT-06	WEE28LRBOMD71
2294 18 27	P1D-T200MS-0320	DK-1/16NPT-08	WEE28LRCF
2294 18 34	P1D-T200MS-0320	DK-1/16NPT-09	WEE28LROMDCF
2295 12 12	P1D-T200MS-0400	DK-1/16NPT-10	WEE28LRVITOMDCF
2295 12 15	P1D-T200MS-0400	DK-1/16NPT-11	WEE28ZL15/16UNCF
2295 12 19	P1D-T200MS-0500	DK-1/16NPT-12	WEE28ZL15/16UNVITCF
2295 18 20	P1D-T200MS-0500	DK-1/16NPT-13	WEE28ZLMCF
2296 12 21	P1D-T200MS-0600	DK-1/16NPT-14	WEE28ZLRB71
2296 12 27	P1D-T200MS-0600	DK-1/16NPT-15	WEE28ZLRCF
2296 12 34	P1D-T200MS-0650	DK-1/16NPT-16	WEE28ZLRVITCF
2297 12 12	P1D-T200MS-0650	DK-1/16NPT-20	WEE30S15/8UNCF
2297 12 15	P1D-T250MS-0025	DK-1/16NPT-22	WEE30SMCF
2297 12 19	P1D-T250MS-0025	DK-1/16NPT-25	WEE30SMOMDCF
2297 18 20	P1D-T250MS-0030	DK-1/16NPT-30	WEE30SMORCF
2299 00 00 02	P1D-T250MS-0030	DK-1/16NPT-40	WEE30SMOROMDCF
2299 12 01	P1D-T250MS-0100	DK-1/8NPT	WEE30SRB71
2299 12 20	P1D-T250MS-0100	DK-1/8NPT-00	WEE30SRBOMD71
229FIL	P1D-T250MS-0150	DK-1/8NPT-06	WEE30SRCF
229FIL	P1D-T250MS-0150	DK-1/8NPT-08	WEE30SROMDCF

2-2A4OEG4MS	P1D-T250MS-0160	DK-1/8NPT-10	WEE30SRVITOMDCF
2-2K MHN-SS	P1D-T250MS-0160	DK-1/8NPT-12	WEE30ZS15/8UNCF
2-2K RA-SS	P1D-T250MS-0350	DK-1/8NPT-15	WEE30ZSRB71
22KAAK13BPN	P1D-T250MS-0350	DK-1/8NPT-18	WEE30ZSRCF
22KAAK13BVNS	P1D-T250MS-0500	DK-1/8NPT-20	WEE35L15/8UNCF
22KAAK13MPN	P1D-T250MS-0500	DK-1/8NPT-25	WEE35L15/8UNOMDCF
22KAAK13MPNS_03	P1D-T250MS-0600	DK-1/8NPT-30	WEE35LMCF
22KAAK13SPN	P1D-T250MS-0600	DK-1/8NPT-45	WEE35LMOMD71
22KAAK17MPN	P1D-T250MS-1000	DK3207Z5051	WEE35LMOMDCF
22KAAK17MPNS	P1D-T250MS-1000	DK3207Z5051	WEE35LMOROMDCF
22KAAK17MPNS_03	P1D-T250VF-0750	DK4009Z5051	WEE35LRBOMD71
22KAAK17SPN	P1D-T250VF-0750	DK4009Z5051	WEE35LRCF
22KAAK21MPN	P1D-TK54MS-0020	DKA019Z5051	WEE35LROMDCF
22KAAK21MPNS_01	P1D-TK54MS-0020	DKA019Z5051	WEE35LRVITOMDCF
22KAAK21MPNS_03	P1D-TK54MS-0160	DKA08CFX	WEE35ZL15/8UNCF
22KAAK21SPN	P1D-TK54MS-0160	DKA1/2CFX	WEE35ZLRB71
22KAAN13MPX	P1D-TL102S-0075N0230	DKA1/2X4.571X	WEE35ZLRCF
22KAAN17MPX	P1D-TL102S-0075N0230	DKA1/2X4.5CFX	WEE38S17/8UNCF
22KAIN13MPN	P1D-TPF4MS-0200	DKA1/471X	WEE38S17/8UNOMDCF
22KAIN13MPX	P1D-TPF4MS-0200	DKA1/4CFX	WEE38SMOMDCF
22KAIN17MPX	P1D-TQ68MS-0050NG183	DKA1/871X	WEE38SR11/4OMDCF
22KAIW13BVNS	P1D-TQ68MS-0050NG183	DKA1/8CFX	WEE38SRBOMD71
22KAIW13MPN	P1D-TQ80MS-0100	DKA1071X	WEE38SRCF
22KAIW13MPNS	P1D-TQ80MS-0100	DKA10CFX	WEE38SROMDCF
22KAIW13MPNS_03	P1D-TQE0MS-0500	DKA11/271X	WEE38ZS17/8UNCF
22KAIW13MPX	P1D-TQE0MS-0500	DKA11/2CFX	WEE38ZSRCF
22KAIW13MVN	P1D-TQE0MS-1000	DKA11/471X	WEE42L17/8UNCF
22KAIW13SPN	P1D-TQE0MS-1000	DKA11/4CFX	WEE42LMOMDCF
22KAIW17MPN	P1D-TQK1MS-0050	DKA1271X	WEE42LMOROMDCF
22KAIW17MPNS	P1D-TQK1MS-0050	DKA12CFX	WEE42LRB71
22KAIW17MPNS_03	P1D-TQK1MS-0160	DKA1471X	WEE42LRBOMD71
22KAIW17SPN	P1D-TQK1MS-0160	DKA14CFX	WEE42LRCF
22KAIW21MPN	P1D-TQK1MS-0400	DKA16CFX	WEE42LRDPR71CF
22KAIW21MPNS	P1D-TQK1MS-0400	DKA171X	WEE42LROMDCF
22KAIW21MPNS_03	P1D-TRC22C-0140N0160	DKA1871X	WEE42LRVITOMDCF
22KAIW21SPN	P1D-TRC22C-0140N0160	DKA18CFX	WEE42ZL17/8UNCF
22KAKK08MPN	P1D-V040MS10050NNNNF	DKA1CFX	WEE42ZLRB71
22KAKK12MPN	P1D-V040MS10050NNNNF	DKA2071X	WEE42ZLRCF
22KAKO08MPN	P1D-V040MS30320C1NNF	DKA20CFX	WERKSZEUGNIS
22KAKO10MPN	P1D-V040MS30320C1NNF	DKA22CFX	WERKSZEUGNIS_01
22KATF06MEN	P1D-V050MS00300NNNNB	DKA22X4.5CFX	WERKSZEUGNIS_02
22KATF06MPN	P1D-V050MS00300NNNNB	DKA26CFX	WERKSZEUGNIS_03
22KATF06MPNS	P1D-V050MS10800CLFNF	DKA26X3.571X	WERKSZEUGNIS_04
22KATF06MPNS_03	P1D-V050MS10800CLFNF	DKA26X3.5CFX	WERKSZEUGNIS_06
22KATF06MPX	P1D-V050MS12100NNNNH	DKA2771X	WERKSZEUGNIS_07
22KATF08MPN	P1D-V050MS12100NNNNH	DKA27CFX	WF8UNPMB12M16
22KATF08MPNS	P1D-V080MS10200CNNNF	DKA3/471X	WF8UNPMB12M22
22KATF08MPNS_04	P1D-V080MS10200CNNNF	DKA3/4CFX	WFS32/12GCFM
22KATF08SPN	P1D-V080MS10250CXNNH	DKA3/871X	WFS32/12GSS
22KATF09MPN	P1D-V080MS10250CXNNH	DKA3/8CFX	WFS32/12S71X
22KATF10BPN	P1D-V100MS10160NNNNH	DKA3371X	WFS32/12SCF
22KATF10MPN	P1D-V100MS10160NNNNH	DKA33CFX	WFS32/12SOMDCF
22KATF10MPNS	P1DVS050MA-0100	DKAZ08CFX	WFS32/12SOMDCFU

22KATF10MPNS_03	P1DVS050MA-0100	DKAZ1/2CFX	WFS32/12ZSCF
22KATF10MPX	P1DVS050MB-0200	DKAZ1/4CFX	WFS32/15L71X
22KATF10SPN	P1DVS050MB-0200	DKAZ1/8CFX	WFS32/15LCF
22KATF13MPN	P1DVS080MA-0160	DKAZ10CFX	WFS32/15LCFX
22KATF13MPX	P1DVS080MA-0160	DKAZ11/2CFX	WFS32/15LOMDCF
22M1-1080120101	P1DVS080MA-0320	DKAZ11/4CFX	WFS32/15LOMDCFU
22-P-100	P1DVS080MA-0320	DKAZ12CFX	WFS32/15LVITOMDCF
22-P-101	P1DVS080MB-0160	DKAZ14CFX	WFS32/15ZLCF
22-P-112	P1DVS080MB-0160	DKAZ16CFX	WFS32/16S71X
22-P-115	P1DVS080MB-0320	DKAZ18CFX	WFS32/16SCF
22-P-120	P1DVS080MB-0320	DKAZ1CFX	WFS32/16SCFX
22-P-24-1	P1DVS125MA-0200	DKAZ20CFX	WFS32/16SOMDCF
22-P-24-2	P1DVS125MA-0200	DKAZ22CFX	WFS32/16SOMDCFU
22-P-24-3	P1DVS125MB-0320	DKAZ26CFX	WFS32/16ZSCF
22-P-25-2	P1DVS125MB-0320	DKAZ27CFX	WFS32/18L71X
22-P-53	P1D-X032MF-0125	DKAZ3/4CFX	WFS32/18LCF
22-P-63	P1D-X032MF-0125	DKAZ3/8CFX	WFS32/18LOMDCF
22-P-84	P1D-X040MJ-0125	DKAZ33CFX	WFS32/18LOMDCFU
22-P-96	P1D-X040MJ-0125	DK-D1VW9100	WFS32/18ZLCF
22-P-98	P1D-X063MF-0250	DK-D1VW9106	WFS32/38GCFM
22PD105QBM3KG161	P1D-X063MF-0250	DK-D1VW9108	WFS32/38GSS
22PD105QHBT1MG162	P1D-X080MF-0280	DK-D1VW9109	WFS33/12GCF
22PD110QBM3KG161	P1D-X080MF-0280	DK-D1VW9110	WFS33/12GCFM
22PD110QBT1KG161	P1D-X080MF-0320YNNNN	DK-D1VW9112	WFS33/12GSS
22PD120QBPKG161	P1D-X080MF-0320YNNNN	DK-D1VW9114	WFS33/16S71X
22PD205QBM3KG161	P1D-X080MF-0400	DK-D1VW9115	WFS33/16SCF
22PD205QBT1KG161	P1D-X080MF-0400	DK-D1VW9116	WFS33/16SCFX
22PD205QHBPXG162	P1D-X080MF-0500	DK-D1VW9118	WFS33/16SOMDCF
22PD205QVT1KG161	P1D-X080MF-0500	DK-D1VW9120	WFS33/16SOMDCFU
22PD210QBM3KG161	P1D-X080MF-0650CG225	DK-D1VW9122	WFS33/16ZSCF
22PD210QBT1KG161	P1D-X080MF-0650CG225	DK-D1VW9125	WFS33/18LCF
22PD210QHBPXG162	P1D-X100MF-0226NG000	DK-D1VW9130	WFS33/18LCFX
22PD220QBM3KG161	P1D-X100MF-0226NG000	DK-D1VW9135	WFS33/18LOMDCF
22PD220QBT1KG161	P1D-X100MJ-0060	DK-D3W3100	WFS33/18LOMDCFU
22PD220QBT1MG161	P1D-X100MJ-0060	DK-D3W3108	WFS33/18ZLCF
22PS10BTE2R2D	P1D-X100ML-0200	DK-D3W3110	WFS33/1GCFM
22PS10BTV1R2D	P1D-X100ML-0200	DK-D3W3112	WFS33/1GSS
22PS10CTE2R2D	P1D-X125MF-0120	DK-D3W3115	WFS33/20S71X
22PS10CTPR2D	P1D-X125MF-0120	DK-D3W3120	WFS33/20SCF
22PS10CTPSX4D	P1D-X125MF-0200	DK-D3W3125	WFS33/20SCFX
22PS10CTV1R2D	P1D-X125MF-0200	DK-D3W3130	WFS33/20SOMDCF
22PSR-101020321	P1D-X125MJ-0060	DK-D3W3145	WFS33/20SOMDCFU
22PSR-102010121	P1D-X125MJ-0060	DKI1/271X	WFS33/20S-SP142CF
22PSS-101010241	P1D-X125ML-0800	DKI1/2CFX	WFS33/20ZSCF
2-2R MHN-SS	P1D-X125ML-0800	DKI1/2MSX	WFS33/22L71X
2-2R RA-B	P1DXS080VS-03206NNNN	DKI1/2X	WFS33/22LCF
2-2R RA-SS	P1DXS080VS-03206NNNN	DKI1/471X	WFS33/22LCFX
2-2RA-M	P1E	DKI1/4CFX	WFS33/22LOMD71
22SFAK10SXN	P1E-4KRH-0050	DKI1/4MSX	WFS33/22LOMDCF
22SFAK13MXN	P1E-4KRH-0050	DKI1/4X	WFS33/22LOMDCFU
22SFAK13MXX	P1E-4KRH-0100	DKI1/8X	WFS33/22ZLCF
22SFAK13SXN	P1E-4KRH-0100	DKI3/871X	WFS33/25SCF
22SFAK17SXN	P1E-4KRH-0160	DKI3/8CFX	WFS33/25SCFX

22SFAK21SXN	P1E-4KRH-0160	DK-M10X1-00	WFS33/25SOMDCF
22SFAN17SXN	P1E-4KRH-0200	DK-M10X1-10	WFS33/25SOMDCFU
22SFAW13MXC	P1E-4KRH-0200	DK-M10X1-15	WFS33/25ZSCF
22SFAW13MXN	P1E-4KRH-0250	DK-M10X1-18	WFS33/25ZSVITCF
22SFAW13MXX	P1E-4KRH-0250	DK-M10X1-20	WFS33/34GCFM
22SFAW13SXN	P1E-4KRH-0400	DK-M10X1-25	WFS33/34GSS
22SFAW17MXN	P1E-4KRH-0400	DK-M10X1-30	WFS34/114GCFM
22SFAW17MXX	P1E-4KRJ-0150	DK-M10X1-40	WFS34/114GSS
22SFAW17SXN	P1E-4KRJ-0150	DK-M4	WFS34/1GCFM
22SFAW21MXX	P1E-4KRJ-0250	DK-M4-06	WFS34/1GSS
22SFAW21SXN	P1E-4KRJ-0250	DK-M4-08	WFS34/20S71X
22SFIN17SXN	P1E-4KRJ-0320	DK-M4-10	WFS34/20SCF
22SFIW13MXN	P1E-4KRJ-0320	DK-M4-12	WFS34/20SCFX
22SFIW13MXX	P1E-4KRK-0025	DK-M4-13	WFS34/20SOMDCF
22SFIW13SXN	P1E-4KRK-0025	DK-M4-14	WFS34/20SOMDCFU
22SFIW17MXN	P1E-4KRK-0100	DK-M5	WFS34/20ZSCF
22SFIW17MXX	P1E-4KRK-0100	DK-M5-00	WFS34/22LCF
22SFIW17SXN	P1E-4KRK-0200	DK-M5-04	WFS34/22LOMDCF
22SFIW21SXN	P1E-4KRK-0200	DK-M5-06	WFS34/22LOMDCFU
22SFTF06MXN	P1E-4LRH-0050	DK-M5-08	WFS34/22ZLCF
22SFTF06MXX	P1E-4LRH-0050	DK-M5-09	WFS34/25S71X
22SFTF06SXN	P1E-4LRH-0080	DK-M5-10	WFS34/25SCF
22SFTF08MXN	P1E-4LRH-0080	DK-M5-11	WFS34/25SCFX
22SFTF08MXX	P1E-4LRH-0200	DK-M5-12	WFS34/25SOMDCF
22SFTF08SXN	P1E-4LRH-0200	DK-M5-13	WFS34/25SOMDCFU
22SFTF09MXN	P1E-4LRH-0300	DK-M5-14	WFS34/25ZSCF
22SFTF09MXX	P1E-4LRH-0300	DK-M5-15	WFS34/28L71X
22SFTF09SXN	P1E-4LRH-0400	DK-M5-16	WFS34/28LCF
22SFTF10MXN	P1E-4LRH-0400	DK-M5-17	WFS34/28LCFX
22SFTF10MXX	P1E-4LRJ-0160	DK-M5-18	WFS34/28LOMDCF
22SFTF10SXN	P1E-4LRJ-0160	DK-M5-20	WFS34/28LOMDCFU
22SFTF13MXN	P1E-4LRJ-0250	DK-M6	WFS34/28LVITOMDCF
22SFTF13MXX	P1E-4LRJ-0250	DK-M6-00	WFS34/28ZLCF
22SFTF13SXN	P1E-4LRJ-0320	DK-M6-06	WFS34/30S71X
230-00204-0	P1E-4LRJ-0320	DK-M6-08	WFS34/30SCF
230-00207-0	P1E-4LRJ-0400	DK-M6-09	WFS34/30SCFX
230-03205-0	P1E-4LRJ-0400	DK-M6-10	WFS34/30SOMDCF
230-03208-0	P1E-4LRK-0050	DK-M6-11	WFS34/30SOMDCFU
23-046	P1E-4LRK-0050	DK-M6-12	WFS34/30ZSCF
230-82008-0	P1E-4LRK-0080	DK-M6-13	WFS34/34GCFM
230-82013-0	P1E-4LRK-0080	DK-M6-14	WFS34/34GSS
230-82036-0	P1E-4LRK-0100	DK-M6-15	WFS35/114GCFM
230-82044-0	P1E-4LRK-0100	DK-M6-16	WFS35/114GSS
230-82054-0	P1E-4LRK-0125	DK-M6-17	WFS35/1GCF
230-82079-0	P1E-4LRK-0125	DK-M6-18	WFS35/1GCFM
230-82149-0	P1E-4LRK-0400	DK-M6-20	WFS35/1GSS
230-82203-0	P1E-4LRK-0400	DK-M6-25	WFS35/25S/10CF
230-82235-0	P1E-4LRK-0500	DK-M6-30	WFS35/25S/10OMDCF
230-82236-0	P1E-4LRK-0500	DK-M6X1-00	WFS35/25S71X
230-82237-0	P1E-4MRH-0050	DK-M6X1-06	WFS35/25SCF
2308FIL	P1E-4MRH-0050	DK-M6X1-08	WFS35/25SCFX
2308FIL	P1E-4MRH-0100	DK-M6X1-10	WFS35/25SOMDCF
230-90009-3	P1E-4MRH-0100	DK-M6X1-11	WFS35/25SOMDCFU

230-90010-3	P1E-4MRH-0400	DK-M6X1-12	WFS35/25ZS/10CF
230-90018-3	P1E-4MRH-0400	DK-M6X1-14	WFS35/25ZSCF
230-90019-3	P1E-4MRJ-1000	DK-M6X1-15	WFS35/30S/10CF
230-90026-3	P1E-4MRJ-1000	DK-M6X1-16	WFS35/30S/10OMDCF
230-90027-3	P1E-4MRK-0050	DK-M6X1-25	WFS35/30S71X
230-90028-3	P1E-4MRK-0050	DK-M8	WFS35/30SCF
230-90029-3	P1E-4MRK-0080	DK-M8-00	WFS35/30SCFU
230-90031-3	P1E-4MRK-0080	DK-M8-06	WFS35/30SCFX
230-99507-0	P1E-4MRK-0200	DK-M8-08	WFS35/30SOMDCF
2309FIL	P1E-4MRK-0200	DK-M8-10	WFS35/30SOMDCFU
2309FIL	P1E-4NRH-0160	DK-M8-12	WFS35/30ZS/10CF
230R10	P1E-4NRH-0160	DK-M8-15	WFS35/30ZSCF
230R10MTC	P1E-4NRH-0250	DK-M8-16	WFS35/35L/10CF
230R1230MTC	P1E-4NRH-0250	DK-M8-18	WFS35/35L/10OMD71
230R30	P1E-4NRJ-0125	DK-M8-20	WFS35/35L/10OMDCF
230R30MTC	P1E-4NRJ-0125	DK-M8-22	WFS35/35L/10VOMDCF
2310 RFV	P1E-4NRJ-0450	DK-M8-25	WFS35/35L71X
2310 RFV	P1E-4NRJ-0450	DK-M8-30	WFS35/35LCF
2310 RV	P1E-4PRH-0080	DK-M8X1-15	WFS35/35LCFX
2310 RV	P1E-4PRH-0080	DK-M8X1-20	WFS35/35LOMDCF
2310 UV	P1E-4PRH-0125	DK-M8X1-30	WFS35/35LOMDCFU
2310 UV	P1E-4PRH-0125	DK-VMY/VBY-A06/10	WFS35/35ZL/10CF
2310 V	P1E-4PRH-0400	DK-VMY/VBY-L06/10-064	WFS35/35ZLCF
2310 V	P1E-4PRH-0400	DK-VMY/VBY-L06/10-100	WFS35/38S/10CF
2310 VUV	P1E-4PRJ-0160	DK-VMY/VBY-L06/10-160	WFS35/38S/10OMDCF
2310-QC	P1E-4PRJ-0160	DK-VMY/VBY-L06/10-210	WFS35/38SCF
2310-QC	P1E-4PRJ-0200	DK-VMY/VBY-L06/10-315	WFS35/38SCFX
2311FIL	P1E-4PRJ-0200	DL043707	WFS35/38SOMDCF
2311FIL	P1E-4PRJ-0500	DL044536	WFS35/38SOMDCFU
2313FIL	P1E-4PRJ-0500	DL047934	WFS35/38ZS/10CF
2313FIL	P1E-4PRK-0125	DL049140	WFS35/38ZSCF
2315-QC	P1E-4PRK-0125	DL049612	WFS35/43SPO1CF
2315-QC	P1E-4QRH-0400	DL052492	WFS36/112GCF
2320 RFV	P1E-4QRH-0400	DL056383	WFS36/112GCFM
2320 RFV	P1E-4QRH-0500	DL081L	WFS36/112GSS
2320 RUV	P1E-4QRH-0500	DL389775	WFS36/114GCFM
2320 RUV	P1E-4QRJ-0250	DL464085	WFS36/114GSS
2320 RV	P1E-4QRJ-0250	DL464086U001	WFS36/35L71X
2320 RV	P1E-4QRK-0100	DL465185	WFS36/35LCF
2320 UV	P1E-4QRK-0100	DL465186	WFS36/35LCFX
2320 UV	P1E-4QRK-0250	DL465313	WFS36/35LOMDCF
2320 V	P1E-4QRK-0250	DL466242	WFS36/35LOMDCFU
2320 V	P1E-6KB0	DL466763U115	WFS36/35ZLCF
2322FIL	P1E-6KB0	DL466763U230	WFS36/38S71X
2322FIL	P1E-6KRM	DL469421	WFS36/38SCF
2323FIL	P1E-6KRM	DL500202	WFS36/38SCFX
2323FIL	P1E-6LB0	DL500293	WFS36/38SOMD71
2324FIL	P1E-6LB0	DL500318	WFS36/38SOMDCF
2324FIL	P1E-6LRM	DM-1004B-MO	WFS36/38SOMDCFU
2325-00000-00600	P1E-6LRM	DM103LD	WFS36/38ZSCF
2325-00000-00600	P1E-6MB0	DM104FKN1	WFS36/42L71X
2340N-04V10	P1E-6MB0	DM104LN1	WFS36/42LCF
2340N-04V10-DL	P1E-6MRM	DM104LN8	WFS36/42LCFX

234FIL	P1E-6MRM	DM13A	WFS36/42LGELCFX
234FIL	P1E-6MRV	DM13I	WFS36/42LOMDCF
2370H-08-08V10V10	P1E-6MRV	DM17A	WFS36/42LOMDCFU
2370H-08V10	P1E-6NB0	DM17I	WFS36/42LVITCF
2370N-04-04V10V10	P1E-6NB0	DM21A	WFS36/42LVITOMDCF
2370N-04V02	P1E-6NRM	DM21I	WFS36/42ZLCF
2370N-04V10	P1E-6NRM	DN05/05	WFS62/12GCFM
2370N-04V10-DL	P1E-6NRV	DN05/05R	WFS62/12GSS
2370N-04V10-P	P1E-6NRV	DN05/10	WFS62/12S71X
2370N-04V16	P1E-6PB0	DN05/10E	WFS62/12SCF
2370N-05-05V10V10	P1E-6PB0	DN05/10R	WFS62/12SOMD71
2370N-05-05V10V10-DL	P1E-6PRM	DN05/13	WFS62/12SOMDCF
2370N-05V10	P1E-6PRM	DN10/10	WFS62/12SOMDCFU
2370N-05V10-P	P1E-6PRV	DN10/10E	WFS62/12ZSCF
2370N-06/3-FACH	P1E-6PRV	DN10/10K	WFS62/14S71X
2370N-06-06V10V10	P1E-6QB0	DN10/10N	WFS62/14SCF
2370N-06V10	P1E-6QB0	DN10/10R	WFS62/14SOMDCF
2370N-06V12	P1E-6QRH	DN10/13	WFS62/14SOMDCFU
2370N-08/3-FACH	P1E-6QRH	DN10/13E	WFS62/14ZSCF
2370N-08-08V10V10	P1E-6QRM	DN10/13N	WFS62/16S71X
2370N-08-08V10V10-DL	P1E-6QRM	DN10/13R	WFS62/16SCF
2370N-08V10	P1E-6QRV	DN10/17	WFS62/16SCFX
2380F-04V07	P1E-6QRV	DN10/17N	WFS62/16SOMD71
2380F-05V07	P1E-6RRM	DN10K/100SZ	WFS62/16SOMDCF
2380F-06V07	P1E-6RRM	DN10K/150SZ	WFS62/16SOMDCFU
2380F-08V07	P1E-6RRV	DN10K/200SZ	WFS62/16ZSCF
2380F-08V07-DL	P1E-6RRV	DN10K/50SZ	WFS62/34GCFM
2380F-10V07	P1E-6SRM	DN1200S	WFS62/34GSS
2380F-12V07	P1E-6SRM	DN13/10DX	WFS63/12GCFM
2380F-12V07-DL	P1E-6SRV	DN13/10FX	WFS63/12GSS
2380F-16V07	P1E-6SRV	DN13/13	WFS63/16S71X
2380F-16V07-DL	P1E-6TRM	DN13/13DX	WFS63/16SCF
2380N-04-04V00V00	P1E-6TRM	DN13/13E	WFS63/16SCFX
2380N-04-04V00V00-DL	P1E-6TRV	DN13/13FX	WFS63/16SOMDCF
2380N-04-04V00V02	P1E-6TRV	DN13/13K	WFS63/16SOMDCFU
2380N-04-04V00V04	P1E-8160BA-0160	DN13/13KN	WFS63/16ZSCF
2380N-04-04V02V02	P1E-8160BA-0160	DN13/13L	WFS63/1GCFM
2380N-04-04V02V04	P1E-8160BA-0760	DN13/13N	WFS63/1GSS
2380N-04-04V02V04-DL	P1E-8160BA-0760	DN13/13R	WFS63/20S71X
2380N-04-04V02V06	P1E-8160DG-0160	DN13/13S_09	WFS63/20SCF
2380N-04-04V04V04	P1E-8160DG-0160	DN13/14S	WFS63/20SCFX
2380N-04-04V04V04-DL	P1E-8160DG-1848	DN13/17	WFS63/20SOMD71
2380N-04-04V06V06	P1E-8160DG-1848	DN13/17E	WFS63/20SOMDCF
2380N-04-04V06V06-DL	P1E-D200MF-0275	DN13/17L	WFS63/20SOMDCFU
2380N-04-04V08V08	P1E-D200MF-0275	DN13/17N	WFS63/20ZSCF
2380N-04V00	P1E-D200MF-0451	DN13/17R	WFS63/25S71X
2380N-04V00-DL	P1E-D200MF-0451	DN13/17V	WFS63/25SCF
2380N-04V00-P	P1E-D200MS-0250	DN13/21	WFS63/25SCFX
2380N-04V00W	P1E-D200MS-0250	DN13/21N	WFS63/25SOMD71
2380N-04V02	P1E-D200MS-0400	DN13K/100SZ	WFS63/25SOMDCF
2380N-04V04	P1E-D200MS-0400	DN13K/150SZ	WFS63/25SOMDCFU
2380N-04V06	P1E-T160MA-0025	DN13K/200SZ	WFS63/25S-SA1OMDCF
2380N-04V10-MSHA	P1E-T160MA-0025	DN13K/50SZ	WFS63/25ZSCF

2380N-04V50-FR	P1E-T160MA-0320	DN14/14S	WFS63/34GCFM
2380N-04V91	P1E-T160MA-0320	DN14/21S	WFS63/34GSS
2380N-05V00	P1E-T160MC-0025	DN16/16S	WFS64/114GCFM
2380N-05V00-DL	P1E-T160MC-0025	DN16/17S	WFS64/114GSS
2380N-05V00W	P1E-T160MC-0320	DN16/21S	WFS64/1GCFM
2380N-05V00W-DL	P1E-T160MC-0320	DN17/13DX	WFS64/1GSS
2380N-06V10	P1E-T160MF-0060	DN17/13FX	WFS64/20S71X
2380N-08V10	P1E-T160MF-0060	DN17/17	WFS64/20SCF
2380N-08V10-DL	P1E-T160MF-0125	DN17/17DX	WFS64/20SCFX
2380N-08V91	P1E-T160MF-0125	DN17/17E	WFS64/20SOMDCF
2380N-20V30	P1E-T160MF-0160	DN17/17FX	WFS64/20SOMDCFU
2388N-04V00	P1E-T160MF-0160	DN17/17K	WFS64/20ZSCF
2388N-04V04	P1E-T160MF-0250	DN17/17L	WFS64/25S71X
2388N-04V12W	P1E-T160MF-0250	DN17/17N	WFS64/25SCF
2388N-08V12	P1E-T160MF-0400	DN17/17R	WFS64/25SCFX
2388N-08V12W	P1E-T160MF-0400	DN17/17S_06	WFS64/25SOMDCF
2388N-08V12W-DL	P1E-T160MF-0730	DN17/17V	WFS64/25SOMDCFU
2390N-04V12	P1E-T160MF-0730	DN17/21	WFS64/25SOMDOZCF
2390N-04V16	P1E-T160MF-0800	DN17/21DX	WFS64/25SVITCF
2390N-08V10	P1E-T160MF-0800	DN17/21E	WFS64/25ZSCF
2390N-08V12	P1E-T160MF-2150	DN17/21FX	WFS64/25ZSCFU
2390N-08V16	P1E-T160MF-2150	DN17/21N	WFS64/30S71X
2390N-12V00	P1E-T160MS-0025	DN17/21R	WFS64/30SCF
2390N-12V00-DL	P1E-T160MS-0025	DN17/26	WFS64/30SCFX
2390N-16V10	P1E-T160MS-0050	DN17/26N	WFS64/30SOMD71
2390N-16V12	P1E-T160MS-0050	DN17/AN13DX	WFS64/30SOMDCF
2390N-16V13	P1E-T160MS-0080	DN17/AN13FX	WFS64/30SOMDCFU
2390N-16V16	P1E-T160MS-0080	DN17/AN17FX	WFS64/30SOMDOZCF
2398 12 01	P1E-T160MS-0100	DN17/AN21DX	WFS64/30ZSCF
23990-4-4	P1E-T160MS-0100	DN17/AN21FX	WFS64/30ZSCFU
23FAAK13SPN	P1E-T160MS-0150	DN17K/100SZ	WFS64/34GCFM
23FAAN13SPN	P1E-T160MS-0150	DN17K/150SZ	WFS64/34GSS
23KAAK13MPN	P1E-T160MS-0160	DN21/21	WFS65/114GCFM
23KAAK17MPN	P1E-T160MS-0160	DN21/21E	WFS65/114GSS
23KAAK21MEN	P1E-T160MS-0170	DN21/21K	WFS65/1GCF
23KAAK21MPN	P1E-T160MS-0170	DN21/21N	WFS65/1GCFM
23KAAN13MPN	P1E-T160MS-0220	DN21/21R	WFS65/1GSS
23KAAN13MPX	P1E-T160MS-0220	DN21/21S_08	WFS65/25S/12CF
23KAAN17MPN	P1E-T160MS-0230	DN21/26	WFS65/25S/12OMDCF
23KAAN17MPX	P1E-T160MS-0230	DN21/26N	WFS65/25S71X
23KAAN21MPN	P1E-T160MS-0250	DN21/33	WFS65/25SCF
23KAAN21MPX	P1E-T160MS-0250	DN21/33N	WFS65/25SCFX
23KAAW13MPN	P1E-T160MS-0300	DN24/26S	WFS65/25SOMDCF
23KAAW13MPNS_01	P1E-T160MS-0300	DN26/26	WFS65/25SOMDCFU
23KAAW17MPNS_01	P1E-T160MS-0380	DN26/26N	WFS65/25ZS/12CF
23KAAW21MPNS_01	P1E-T160MS-0380	DN26/26S_03	WFS65/25ZSCF
23KAIN13MPN	P1E-T160MS-0430	DN26/33	WFS65/30S/12CF
23KAIN13MPX	P1E-T160MS-0430	DN26/33N	WFS65/30S/12OMDCF
23KAIN13MVX	P1E-T160MS-0450	DN33/33	WFS65/30S71X
23KAIN17MPN	P1E-T160MS-0450	DN33/33N	WFS65/30SCF
23KAIN17MPX	P1E-T160MS-0470	DN600S	WFS65/30SCFX
23KAIN21MPX	P1E-T160MS-0470	DNM 9	WFS65/30SOMD71
23KAIW13MPN	P1E-T160MS-0500	DNS 1	WFS65/30SOMDCF

23KAIW13MPNS_03	P1E-T160MS-0500	DNS 1	WFS65/30SOMDCFU
23KAIW13MPNS_04	P1E-T160MS-0600	DNS 14	WFS65/30SOMDOZCF
23KAIW17MPN	P1E-T160MS-0600	DNS 14	WFS65/30ZS/12CF
23KAIW17MPNS_03	P1E-T160MS-0620	DNS 15	WFS65/30ZSCF
23KAIW21MPN	P1E-T160MS-0620	DNS 15	WFS65/30ZSCFU
23KAIW21MPNS_04	P1E-T160MS-0700	DNS 16	WFS65/38S/12CF
23KAKK12MPN	P1E-T160MS-0700	DNS 16	WFS65/38S/12OMDCF
23KAKO08MPN	P1E-T160MS-0780	DNS 2	WFS65/38S71X
23KAKO10MPN	P1E-T160MS-0780	DNS 2	WFS65/38SCF
23KATF06MPN	P1E-T160MS-0800	DNS 3	WFS65/38SCFX
23KATF06MPNS_04	P1E-T160MS-0800	DNS 3	WFS65/38SOMDCF
23KATF06MPX	P1E-T160MS-0900	DNS 4	WFS65/38SOMDCFU
23KATF08MPN	P1E-T160MS-0900	DNS 4	WFS65/38SOMDOZCF
23KATF08MPNS_04	P1E-T160MS-1100	DNS 6	WFS65/38SVITCF
23KATF08MPX	P1E-T160MS-1100	DNS 6	WFS65/38ZS/12CF
23KATF09MPN	P1E-T160MS-1550	DNS600S	WFS65/38ZSCF
23KATF10MPN	P1E-T160MS-1550	DNT3-1	WFS66/112GCFM
23KATF10MPNS_04	P1E-T200/S60445	DNT4-1	WFS66/112GSS
23KATF10MPX	P1E-T200/S60445	DNT7-1	WFS66/114GCFM
23KATF13MPN	P1E-T200/S60475-0600	DO17	WFS66/114GSS
23KATF13MPX	P1E-T200/S60475-0600	DO17N	WFS66/30S71X
23KATP10MPX	P1E-T200FS-0100	DO21	WFS66/30SCF
23KEAK13BPN	P1E-T200FS-0100	DO21N	WFS66/30SOMD71
23KEAK13BPN	P1E-T200MF-0600	DOKU-FA00-1616/17/18	WFS66/30SOMDCF
23KEAK17BPN	P1E-T200MF-0600	DOKU-PADZ2709.400	WFS66/30SOMDCFU
23KEAK17BPN	P1E-T200MS-0010	DOZ04LL	WFS66/30ZSCF
23KEAK21BPN	P1E-T200MS-0010	DOZ06L	WFS66/38S71X
23KEAK21BPN	P1E-T200MS-0025	DOZ06L71	WFS66/38SCF
23KEAW21BPNS_01	P1E-T200MS-0025	DOZ06LL	WFS66/38SCFX
23KEIN13BPN	P1E-T200MS-0050	DOZ06LNBR71	WFS66/38SOMD71
23KEIW13BPN	P1E-T200MS-0050	DOZ06LVIT	WFS66/38SOMDCF
23KEIW13BPN	P1E-T200MS-0080	DOZ06S	WFS66/38SOMDCFU
23KEIW13BPNS_01	P1E-T200MS-0080	DOZ06S71	WFS66/38ZSCF
23KEIW17BPN	P1E-T200MS-0095	DOZ06SNBR71	WFS66/38ZSCFU
23KEIW17BPN	P1E-T200MS-0095	DOZ06SVIT	WFSG32/12GSS
23KEIW21BPN	P1E-T200MS-0110	DOZ08L	WFSG32/38GSS
23KEIW21BPN	P1E-T200MS-0110	DOZ08L71	WFSG33/12GSS
23KETF06BPN	P1E-T200MS-0125	DOZ08LNBR71	WFSG33/1GSS
23KETF06BPN	P1E-T200MS-0125	DOZ08LVIT	WFSG33/34GSS
23KETF08BPN	P1E-T200MS-0140	DOZ08S	WFSG34/114GSS
23KETF08BPN	P1E-T200MS-0140	DOZ08S71	WFSG34/1GSS
23KETF09BPN	P1E-T200MS-0150	DOZ08SNBR71	WFSG34/34GSS
23KETF09BPN	P1E-T200MS-0150	DOZ08SVIT	WFSG36/112GSS
23KETF10BPN	P1E-T200MS-0210	DOZ10L	WFSG36/114GSS
23KETF10BPN	P1E-T200MS-0210	DOZ10L71	WFSG62/12GSS
23KETF13BPN	P1E-T200MS-0250	DOZ10LNBR71	WFSG62/34GSS
23KETF13BPN	P1E-T200MS-0250	DOZ10LVIT	WFSG63/12GSS
23SFAK10SXN	P1E-T200MS-0270	DOZ10S	WFSG63/1GSS
23SFAK10SXNS	P1E-T200MS-0270	DOZ10S71	WFSG63/34GSS
23SFAK13SXN	P1E-T200MS-0300	DOZ10SNBR71	WFSG64/114GSS
23SFAK13SXNS_03	P1E-T200MS-0300	DOZ10SVIT	WFSG64/1GSS
23SFAK17SXN	P1E-T200MS-0320	DOZ12L	WFSG64/34GSS
23SFAK21SXN	P1E-T200MS-0320	DOZ12L71	WFSG65/114GSS

23SFAN10MXX	P1E-T200MS-0350	DOZ12LNBR71	WFSG65/1GSS
23SFAN10SXN	P1E-T200MS-0350	DOZ12LVIT	WFSG66/112GSS
23SFAN13MXN	P1E-T200MS-0450	DOZ12S	WFSG66/114GSS
23SFAN13MXX	P1E-T200MS-0450	DOZ12S71	WG4PB10-3/8
23SFAN13SXN	P1E-T200MS-0500	DOZ12SNBR71	WG4PB6-1/4
23SFAN17MXX	P1E-T200MS-0500	DOZ12SVIT	WG4PB8-1/4
23SFAN17SXN	P1E-T200MS-0700	DOZ14S	WH06LM71
23SFAN21SXN	P1E-T200MS-0700	DOZ14S71	WH06LM71X
23SFAW10SXN	P1E-T200MS-0800	DOZ14SNBR71	WH06LMCF
23SFAW10SXNS	P1E-T200MS-0800	DOZ14SVIT	WH06LMDPR71CF
23SFAW13MXD	P1E-T200MS-0950	DOZ15L	WH06LMKD71
23SFAW13MXN	P1E-T200MS-0950	DOZ15L71	WH06LMKDOMD71
23SFAW13MXX	P1E-T200MS-1000	DOZ15LNBR71	WH06LMKDSCF
23SFAW13MXXS	P1E-T200MS-1000	DOZ15LVIT	WH06LMKDSOMDCF
23SFAW13SXN	P1E-T200MS-1100	DOZ16S	WH06LMKDSOMDCFMK
23SFAW17MXX	P1E-T200MS-1100	DOZ16S71	WH06LMKDSVITOMDCF
23SFAW17SXN	P1E-T200MS-1350	DOZ16SNBR71	WH06LMOMD71
23SFAW17SXNS	P1E-T200MS-1350	DOZ16SVIT	WH06LMOMDCF
23SFAW21MXXS	P1G-S006SS-0005	DOZ18L	WH06LR1/4KDSCF
23SFAW21SXN	P1G-S006SS-0005	DOZ18L71	WH06LR1/4KDSOMDCF
23SFAW21SXNS	P1G-S006SS-0010	DOZ18LNBR71	WH06LR71
23SFIN13MXN	P1G-S006SS-0010	DOZ18LVIT	WH06LRCF
23SFIN13MXX	P1G-S006SS-0015	DOZ20S	WH06LRKD71
23SFIN17MXX	P1G-S006SS-0015	DOZ20S71	WH06LRKDOMD71
23SFIW10SXN	P1G-S010SS-0005	DOZ20SNBR71	WH06LRKDSCF
23SFIW13MXN	P1G-S010SS-0005	DOZ20SVIT	WH06LRKDSCFMK
23SFIW13MXX	P1G-S010SS-0010	DOZ22L	WH06LRKDSOMDCF
23SFIW13SXN	P1G-S010SS-0010	DOZ22L71	WH06LRKDSVITOMDCF
23SFIW17MXD	P1G-S010SS-0015	DOZ22LNBR71	WH06LRKDSVOMDBLKOEL
23SFIW17MXX	P1G-S010SS-0015	DOZ22LVIT	WH06LRMS
23SFIW17SXN	P1G-S016SS-0005	DOZ25S	WH06LROMD71
23SFIW21SXN	P1G-S016SS-0005	DOZ25S71	WH06LROMDCF
23SFKO10MXX	P1G-S016SS-0010	DOZ25SNBR71	WH06LRVITCF
23SFKU13MXN	P1G-S016SS-0010	DOZ25SVIT	WH06SM71
23SFTF04MXN	P1G-S016SS-0015	DOZ28L	WH06SMCF
23SFTF06MXN	P1G-S016SS-0015	DOZ28L71	WH06SMKD71
23SFTF06MXX	P1J-4DMB	DOZ28LNBR71	WH06SMKDSCF
23SFTF06SXN	P1J-4DMB	DOZ28LVIT	WH06SMKDSOMDCF
23SFTF08MXX	P1J-4DMF	DOZ30S	WH06SMOMD71
23SFTF08SXN	P1J-4DMF	DOZ30S71	WH06SMOMDCF
23SFTF09MXD	P1J-4DRS	DOZ30SNBR71	WH06SR71
23SFTF09MXX	P1J-4DRS	DOZ30SVIT	WH06SRCF
23SFTF09MXXS	P1J-4HMB	DOZ35L	WH06SRCFX
23SFTF09SXN	P1J-4HMB	DOZ35L71	WH06SRKD71
23SFTF10MXX	P1J-4HMF	DOZ35LNBR71	WH06SRKDOMD71
23SFTF10SXN	P1J-4HMF	DOZ35LVIT	WH06SRKDSCF
23SFTF13MXD	P1J-4HRC	DOZ38S	WH06SRKDSOMDCF
23SFTF13MXX	P1J-4HRC	DOZ38S71	WH06SRKDSVITCF
23SFTF13SXN	P1J-4HRS	DOZ38SNBR71	WH06SROMD71
23SFTP06MXX	P1J-4HRS	DOZ38SVIT	WH06SROMDCF
23SFTP06MXXS_01	P1J-4JMB	DOZ42L	WH06ZLM71
23SFTP10MXX	P1J-4JMB	DOZ42L71	WH06ZLMKD71
23SFTP10MXXS_01	P1J-4JMF	DOZ42LNBR71	WH06ZLMKDSCF

23SRIW13SXNS	P1J-4JMF	DOZ42LVIT	WH06ZLMKDSVITCF
23SRTF10MXX	P1J-4KMB	DP1	WH06ZLR71
24 AOEL6-S	P1J-4KMB	DP10-10-6BK	WH06ZLRCF
2-4 B2HF-SS	P1J-4KMF	DP15-15-8BK	WH06ZLRKD71
2-4 B2HT2-SS	P1J-4KMF	DP2-01-000	WH06ZLRKDSCF
24 BL-S	P1J-4LMB	DP2-01-000	WH06ZLRKDSVITCF
24 BODY DIE	P1J-4LMB	DP2-01-001	WH06ZSM71
24 BTX-S	P1J-4LMF	DP2-01-001	WH06ZSMKDSCF
24 BTX-SS	P1J-4LMF	DP6-6-4BK	WH06ZSR71
24 BU-S	P1J-4MMB	DP8-01-000	WH06ZSRKD71
24 BZ-SS	P1J-4MMB	DP8-01-000	WH06ZSRKDSCF
24 C5BU-S	P1J-4MMF	DPA04571X	WH08LM71
24 C5OLO-S	P1J-4MMF	DPA0X	WH08LMCF
24 C5OX-S	P1J-4NMB	DPA14571X	WH08LMKD71
24 C5OX-S V0894	P1J-4NMB	DPA1X	WH08LMKDOMD71
24 C6LO-S	P1J-4NMF	DPA24571X	WH08LMKDSCF
24 C6X-B	P1J-4NMF	DPA2X	WH08LMKDSOMDCF
24 C6X-S	P1J-6DS0	DPA34571X	WH08LMKDSVITOMDCF
2-4 CBZ-SS	P1J-6DS0	DPA3X	WH08LMOMD71
24 CTX-S	P1J-6HS0	DPA44571X	WH08LMOMDCF
2-4 DBZ-SS	P1J-6HS0	DPA4X	WH08LMVITOMDCF
24 EBU-S	P1J-6KS0	DPA54571X	WH08LR71
24 ELO-S	P1J-6KS0	DPA5X	WH08LRCF
24 ETX-S	P1J-6MS0	DPA64571X	WH08LRCFX
24 F5BU-S	P1J-6MS0	DPA6X	WH08LRKD71
24 F5OHAO-S	P1J-G020DS-0005	DPA74571X	WH08LRKDOMD71
24 F5OLO-S	P1J-G020DS-0005	DPA7X	WH08LRKDSCF
24 F5OX-S	P1J-G020DS-0010	DPA8X	WH08LRKDSOMDCF
24 F6X-S	P1J-G020DS-0010	DPB14571X	WH08LRKDSVITCF
24 FBU-S	P1J-G020DS-0015	DPB1X	WH08LRKDSVITOMDCF
2-4 FBU-S	P1J-G020DS-0015	DPB24571X	WH08LRMS
2-4 FBZ-B	P1J-G020DS-0020	DPB2X	WH08LROMD71
2-4 FBZ-SS	P1J-G020DS-0020	DPB34571X	WH08LROMDCF
24 FF5OLO-S	P1J-G020DS-0025	DPB3X	WH08LRVITOMDCF
2-4 FH4BZ-B	P1J-G020DS-0025	DPB44571X	WH08SM71
2-4 FH4BZ-SS	P1J-G020DS-0030	DPB4X	WH08SMCF
24 FLO-S	P1J-G020DS-0030	DPB54571X	WH08SMCFX
24 FNL-S	P1J-G020DS-0040	DPB5X	WH08SMKD71
24 FNTX-B	P1J-G020DS-0040	DPC14571X	WH08SMKDOMD71
24 FNTX-S	P1J-G020DS-0050	DPC1VZX	WH08SMKDSCF
24 FNZ-SS	P1J-G020DS-0050	DPC1X	WH08SMKDSOMDCF
24 GBU-S	P1J-G025DS-0010	DPC24571X	WH08SMKDSVITOMDCF
2-4 GBZ-SS	P1J-G025DS-0010	DPC2VZX	WH08SMOMD71
24 GTX-S	P1J-G025DS-0015	DPC2X	WH08SMOMDCF
24 HBU-S	P1J-G025DS-0015	DPC34571X	WH08SR71
24 HLO-S	P1J-G025DS-0020	DPC3VZX	WH08SRCF
24 HP5ON-S	P1J-G025DS-0020	DPC3X	WH08SRKD71
24 JBU-S	P1J-G025DS-0025	DPC44571X	WH08SRKDOMD71
24 JLO-S	P1J-G025DS-0025	DPC4VZX	WH08SRKDSCF
24 JTX-B	P1J-G025DS-0030	DPC4X	WH08SRKDSOMDCF
24 JTX-S	P1J-G025DS-0030	DPC54571X	WH08SRKDSVITOMDCF
24 LHQ1-S	P1J-G025DS-0040	DPC5VZX	WH08SROMD71
24 LHQ2-S	P1J-G025DS-0040	DPC5X	WH08SROMDCF

24 LOHQ1-S	P1J-G025DS-0050	DPC64571X	WH08SRVITCF
24 LOHQ2-S	P1J-G025DS-0050	DPC6VZX	WH08ZLMKDSCF
24 LOVQ1-S	P1J-G032DS-0010	DPC6X	WH08ZLMKDSSSACF
24 LOVQ2-S	P1J-G032DS-0010	DPC74571X	WH08ZLRCF
24 LVQ1-S	P1J-G032DS-0015	DPC7VZX	WH08ZLRKD71
24 LVQ2-S	P1J-G032DS-0015	DPC7X	WH08ZLRKDSCF
24 NUT DIE	P1J-G032DS-0020	DPC8X	WH08ZLRKDSVITCF
24 P5ON-S	P1J-G032DS-0020	DPC9X	WH08ZSM71
24 PH-SS	P1J-G032DS-0025	DPDC1X	WH08ZSMKDSCF
24 PNBZ-SS	P1J-G032DS-0025	DPDC2VZX	WH08ZSR71
24 PNLO-S	P1J-G032DS-0030	DPDC2X	WH08ZSRKD71
24 PNTX-S	P1J-G032DS-0030	DPDC3VZX	WH08ZSRKDSCF
24 R5OLO-S	P1J-G032DS-0040	DPDC3X	WH10LM71
24 R6LO-S	P1J-G032DS-0040	DPDC44571X	WH10LMCF
24 R6X-S	P1J-G032DS-0050	DPDC4VZX	WH10LMCFCAP
24 R6X-SS	P1J-G032DS-0050	DPDC4X	WH10LMCFX
24 RTX-S	P1J-G032DS-0080	DPDC5X	WH10LMKD71
24 S5OX-S	P1J-G032DS-0080	DPDC6X	WH10LMKDOMD71
24 S6LO-S	P1J-G040DS-0010	DPDC7X	WH10LMKDSCF
24 S6X-S	P1J-G040DS-0010	DPDC8X	WH10LMKDSOMDCF
24 SBR	P1J-G040DS-0025	DPEC4X	WH10LMKDSVITOMDCF
2-4 SE-SS	P1J-G040DS-0025	DPO1X	WH10LMOMD71
2-4 T2HF-SS	P1J-G040DS-0030	DPO2X	WH10LMOMDCF
2-4 T2HG-SS	P1J-G040DS-0030	DPO34571X	WH10LMVITCF
24 TL-S	P1J-G040DS-0040	DPO3X	WH10LR3/8KDSOMDCF
24 TPL-S	P1J-G040DS-0040	DPO4X	WH10LR71
24 TPL-SS	P1J-G040DS-0050	DPR06L71X	WH10LRCF
2-4 TRBZ-SS	P1J-G040DS-0050	DPR06LSPH71X	WH10LRKD71
24 TU-S	P1J-G040DS-0080	DPR06LUNGEH71X	WH10LRKDMS
24 TU-SS	P1J-G040DS-0080	DPR083C2M	WH10LRKDOMD71
24 TX-B	P1J-G040DS-0100	DPR083C30M	WH10LRKDSCF
24 TX-S	P1J-G040DS-0100	DPR083C5M	WH10LRKDSDPR71CF
24 TX-SS	P1J-G050DS-0010	DPR08L71X	WH10LRKDSOMDCF
24 TZ-SS	P1J-G050DS-0010	DPR08LSPH71X	WH10LRKDSVITCF
24 V5OLO-S	P1J-G050DS-0015	DPR08LUNGEH71X	WH10LRKDSVITOMDCF
24 V5OX-S	P1J-G050DS-0015	DPR103C06M	WH10LROMD71
24 V6LO-S	P1J-G050DS-0020	DPR10L71X	WH10LROMDCF
24 V6X-S	P1J-G050DS-0020	DPR10L71XBP	WH10LRVITCF
24 VTX-B	P1J-G050DS-0025	DPR10LSPH71X	WH10SM71
24 VTX-S	P1J-G050DS-0025	DPR10LUNGEH71X	WH10SMCF
24 WELO-WLNL-S	P1J-G050DS-0030	DPR12L71X	WH10SMCFX
24 WLNL-S	P1J-G050DS-0030	DPR12L71XBP	WH10SMKD71
24 WLN-S	P1J-G050DS-0040	DPR12LOFF71X	WH10SMKDOMD71
24 WLO-S	P1J-G050DS-0040	DPR12LSPH71X	WH10SMKDSCF
24 WLO-WLNL-S	P1J-G050DS-0050	DPR12LUNGEH71X	WH10SMKDSOMDCF
24 WTX-S	P1J-G050DS-0050	DPR14S71X	WH10SMOMDCF
24 WTX-WLN-S	P1J-G050DS-0080	DPR14SSPH71X	WH10SMVITCF
24 XHLO-S	P1J-G050DS-0080	DPR15L71VOLX	WH10SR71
24 XHQ1-S	P1J-G063DS-0020	DPR15L71X	WH10SRCF
24 XHQ2-S	P1J-G063DS-0020	DPR15L71XBP	WH10SRKD71
24 XVQ1-S	P1J-G063DS-0025	DPR15LSPH71X	WH10SRKDOMD71
24 XVQ2-S	P1J-G063DS-0025	DPR16S71X	WH10SRKDSCF
2-400	P1J-G063DS-0030	DPR16SSPH71X	WH10SRKDSOMDCF

240-000185	P1J-G063DS-0030	DPR18L71X	WH10SRKDSVITCF
240-000186	P1J-G063DS-0040	DPR18LOFF71X	WH10SROMD71
2408 X 4	P1J-G063DS-0040	DPR18LSPH71X	WH10SROMDCF
240A-2916	P1J-G063DS-0050	DPR20S71X	WH10SRVITCF
240FIL	P1J-G063DS-0050	DPR20SSPH71X	WH10ZLMKD71
240FIL	P1J-G063DS-0080	DPR22L71VOLX	WH10ZLMKDSCF
24-1 1/2 F5OG-S	P1J-G063DS-0080	DPR22L71X	WH10ZLMKDSSSACF
24-1 F5OG-S	P1J-G063DS-0100	DPR22L71XBP	WH10ZLR71
24-10 TRLO-S	P1J-G063DS-0100	DPR22LGED71X	WH10ZLRCF
24-10TRTXS	P1J-K050DS-0060	DPR25S71X	WH10ZLRKD71
24-12 F5OG5-S	P1J-K050DS-0060	DPR25SSPH71X	WH10ZLRKDSCF
24-12 TRBU-S	P1J-S012DS-0010	DPR28L71X	WH10ZLRKDSSCHUCF
24-12 TRLO-S	P1J-S012DS-0010	DPR28LSPH71X	WH10ZLRKDSVITCF
24-120-8	P1J-S012DS-0015	DPR30S71X	WH10ZSM71
24-12TRTXS	P1J-S012DS-0015	DPR30S71XBP	WH10ZSMKD71
24-16 F5OG5-S	P1J-S012DS-0020	DPR30SSPH71X	WH10ZSMKDSCF
24-16 FTX-S	P1J-S012DS-0020	DPR35L71X	WH10ZSRKD71
24-16 MHN-SS	P1J-S012DS-0025	DPR35LSPH71X	WH10ZSRKDSCF
24-16 RB-S	P1J-S012DS-0025	DPR38S71X	WH12LM14X1.5CF
24-16 RB-SS	P1J-S012SS-0010	DPR38S71XBP	WH12LM14X1.5OMD71
24-16 TRBU-S	P1J-S012SS-0010	DPR42L71X	WH12LM18KDSOMDCF
24-16 TRBZ-SS	P1J-S020DS-0005	DR10-6-6BK	WH12LM18X1.5OMDCF
24-16 TRLO-S	P1J-S020DS-0005	DR10SSIMX	WH12LM71
24-16 TRTX-S	P1J-S020DS-0010	DR15-8-8BK	WH12LMCF
24-16F42EDMXS	P1J-S020DS-0010	DR6-4-4BK	WH12LMCFX
24-16F42EDMXSS	P1J-S020DS-0015	DREH06SX	WH12LMKD71
24-16HMK4S	P1J-S020DS-0015	DREH12SX	WH12LMKDOMD71
24-16HMK4SS	P1J-S020DS-0020	DREH30SX	WH12LMKDSCF
24-16TRMLOSS	P1J-S020DS-0020	DRG3-5015C-MO	WH12LMKDSOMDCF
24-16TRMTXSS	P1J-S020DS-0025	DRK 00008	WH12LMKDSVITOMDCF
24-16TRTXS	P1J-S020DS-0025	DRK 00015	WH12LMOMD71
2418 X 4	P1J-S020DS-0030	DRK 00037	WH12LMOMDCF
241A-2916	P1J-S020DS-0030	DRK 00054	WH12LMVITCF
24-20 C5OLO-S	P1J-S020DS-0040	DRK 00055	WH12LR1/2CF
24-20 C5OX-S	P1J-S020DS-0040	DRK 00056	WH12LR1/2KDSOMDCF
24-20 CTX-S	P1J-S020DS-0050	DRK 00081	WH12LR1/4KDSOMDCF
24-20 F5OG5-S	P1J-S020DS-0050	DRK 00091	WH12LR71
24-20 F5OLO-S	P1J-S020KS-0020	DRK 00102-3-RCR	WH12LRCF
24-20 F5OX-S	P1J-S020KS-0020	DRK 00188-RCR	WH12LRKD71
24-20 FTX-S	P1J-S020KS-0050	DRK 00199	WH12LRKDOMD71
24-20 RB-S	P1J-S020KS-0050	DRK 00203	WH12LRKDSCF
24-20 RB-SS	P1J-S020PS-0050	DRK 00227	WH12LRKDSDPR71CF
24-20 TL-S	P1J-S020PS-0050	DRK 00306	WH12LRKDSOMDCF
24-20 TRBU-S	P1J-S020SS-0010	DRK 00307	WH12LRKDSVITOMDCF
24-20 TRLO-S	P1J-S020SS-0010	DRK 00336-RCR	WH12LRMDKAZCF
24-20 TRTX-S	P1J-S020SS-0015	DRK00206	WH12LRMS
24-20C4OMLOS	P1J-S020SS-0015	DRK32036	WH12LROMD71
24-20C4OMXS	P1J-S020SS-0025	DRKAB1082E25ES	WH12LROMDCF
24-20C4OMXSS	P1J-S020SS-0025	DRKAB10861E40GS	WH12LRVITOMDCF
24-20F3MXS	P1J-S025DS-0010	DRLA1002P07K	WH12SMCF
24-20F42EDMLOS	P1J-S025DS-0010	DRLAB1082E40KS	WH12SMCFX
24-20F42EDMXS	P1J-S025DS-0015	DRLAB1082E50KS	WH12SMKD71
24-20F42EDMXSS	P1J-S025DS-0015	DRP-14-10B/002	WH12SMKDOMD71

24-20F4OMXS
24-20F4OMXSS
24-20F5OMXS
24-20F5OMXSS
24-20F642EDMXS
24-20FMTXSS
24-20G4MXS
24-20HMK4S
24-20HMK4SS
24-20HMLOS
24-20TRMTXSS
24-24 CBZ-SS
24-24 EBZ-SS
24-24 FBZ-SS
24-24 FE-SS
24-24 FHC-SS
24-24 GBZ-SS
24-24 HBZ-SS
24-24 MHN-SS
24-24 ZHBA-SS
24-24-24 FT-SS
24-24-24 JBZ-SS
2425FIL
2425FIL
242A-2916
24-32 F5OX-S
243A-2916
2440D-025V32
2440D-025V32-DL
2440D-03V32
2440D-03V32-DL
2440D-03V34
2440D-03V37
2440D-04V32
2440D-04V32-DL
2440D-05V32
2440D-05V32-DL
2440D-05V32-P
2440N-06V30
2440N-06V30-DL
2440N-08V30
2440N-12V30
2440N-12V30-DL
2440N-16V30
2440N-16V30-DL
2442FIL
2442FIL
2443FIL
2443FIL
2445FIL
2445FIL
244A-2916
24-4R6O4MXS

P1J-S025DS-0020
P1J-S025DS-0020
P1J-S025DS-0025
P1J-S025DS-0025
P1J-S025DS-0030
P1J-S025DS-0030
P1J-S025DS-0035
P1J-S025DS-0035
P1J-S025DS-0040
P1J-S025DS-0040
P1J-S025DS-0050
P1J-S025DS-0050
P1J-S025PS-0025
P1J-S025PS-0025
P1J-S025SS-0005
P1J-S025SS-0005
P1J-S025SS-0010
P1J-S025SS-0010
P1J-S025SS-0015
P1J-S025SS-0015
P1J-S025SS-0025
P1J-S025SS-0025
P1J-S025SS-0040
P1J-S025SS-0040
P1J-S032DS-0010
P1J-S032DS-0010
P1J-S032DS-0015
P1J-S032DS-0015
P1J-S032DS-0020
P1J-S032DS-0020
P1J-S032DS-0025
P1J-S032DS-0025
P1J-S032DS-0030
P1J-S032DS-0030
P1J-S032DS-0040
P1J-S032DS-0040
P1J-S032DS-0050
P1J-S032DS-0050
P1J-S032DS-0080
P1J-S032DS-0080
P1J-S032DS-0100
P1J-S032DS-0100
P1J-S032SS-0005
P1J-S032SS-0005
P1J-S032SS-0010
P1J-S032SS-0010
P1J-S032SS-0015
P1J-S032SS-0015
P1J-S032SS-0020
P1J-S032SS-0020
P1J-S032SS-0025
P1J-S032SS-0025
P1J-S032SS-0050

DRP-14-10B/002
DRP-14-447/002
DRP-14-447/002
DRP-85-059
DRP-85-059
DRP-85-060
DRP-85-060
DRP-85-285
DRP-85-285
DRP-94-136
DRP-94-136
DRP-94-169
DRP-94-169
DRP-94-182
DRP-94-182
DRP-95-141
DRP-95-141
DRP-95-333
DRP-95-333
DRP-95-623
DRP-95-623
DRP-95-744
DRP-95-744
DRP-95-810
DRP-95-810
DRP-96-434
DRP-96-434
DRP-96-435
DRP-96-435
DRP-96-451
DRP-96-451
DRUC101/5MSX
DRV13/100
DRV13/20
DRV13/20S
DRV13/20S_02
DRV13/30
DRV13/30N
DRV13/30S
DRV13/30S_03
DRV13/40
DRV13/40S_01
DRV13/40S_02
DRV13/50
DRV13/50S
DRV13/60
DRV13/60S_02
DRV13/70
DRV13/70S_03
DRV13/80
DRV13/80S
DS04/04P
DS06/06

WH12SMKDSCF
WH12SMKDSOMDCF
WH12SMOMD71
WH12SMOMDCF
WH12SR71
WH12SRCF
WH12SRCFX
WH12SRKD71
WH12SRKDOMD71
WH12SRKDSCF
WH12SRKDSOMDCF
WH12SRKDSSA1CF
WH12SRKDSVITCF
WH12SRKDSVITOMDCF
WH12SROMD71
WH12SROMDCF
WH12SRVITCF
WH12ZLMKDSCF
WH12ZLR71
WH12ZLRKD71
WH12ZLRKDSCF
WH12ZLRKDSVITCF
WH12ZSM71
WH12ZSMKDSCF
WH12ZSR71
WH12ZSRKD71
WH12ZSRKDSCF
WH14SMCF
WH14SMKD1OMDCF
WH14SMKDOMD71
WH14SMOMD71
WH14SMOMDCF
WH14SR71
WH14SRCF
WH14SRKD71
WH14SRKDOMD71
WH14SRKDSCF
WH14SRKDSOMDCF
WH14SROMD71
WH14SROMDCF
WH14ZSRKD71
WH14ZSRKDSCF
WH15LM+DKAZ18CF
WH15LM22X1.5KDSOMDCF
WH15LM71
WH15LMCF
WH15LMCFX
WH15LMKD71
WH15LMKDSCF
WH15LMKDSOMDCF
WH15LMKDSVITOMDCF
WH15LMOMD71
WH15LMOMDCF

24-4R6P4MLOS	P1J-S032SS-0050	DS06/06N	WH15LMVITCF
24-4R6P4MXS	P1J-S040DS-0010	DS06/06P	WH15LMVITOMDCF
245A-2916	P1J-S040DS-0010	DS08/08	WH15LR71
245R30	P1J-S040DS-0015	DS08/08P	WH15LRCF
245R30MTC	P1J-S040DS-0015	DS09/09	WH15LRCFX
24-6 F5OG5-S	P1J-S040DS-0020	DS09/09N	WH15LRKD71
246A-2916	P1J-S040DS-0020	DS10/10	WH15LRKDOMD71
247A-2916	P1J-S040DS-0025	DS1200SV	WH15LRKDSCF
2494FIL	P1J-S040DS-0025	DS13/13	WH15LRKDSDPR71CF
2494FIL	P1J-S040DS-0030	DS13/13N	WH15LRKDSOMDCF
2498FIL	P1J-S040DS-0030	DS15LSA2CUX	WH15LRKDSVITCF
2498FIL	P1J-S040DS-0040	DS161C	WH15LRKDSVITOMDCF
2499FIL	P1J-S040DS-0040	DS161CH	WH15LRMS
2499FIL	P1J-S040DS-0050	DS161CHT	WH15LROMD71
249FIL	P1J-S040DS-0050	DS161CR	WH15LROMDCF
249FIL	P1J-S040DS-0060	DS161CRP	WH15LROMDMS
24AP1CF	P1J-S040DS-0060	DS161CRTV	WH15LRVITCF
24AP2CF	P1J-S040DS-0080	DS161N	WH15ZLM71
24AP2SS	P1J-S040DS-0080	DS161NR	WH15ZLMKDSCF
24BBMTXS	P1J-S040KS-0025	DS161NRV	WH15ZLRKD71
24BBMTXSS	P1J-S040KS-0025	DS162C	WH15ZLRKDSCF
24BF24-316	P1J-S040KS-0080	DS162CV	WH15ZLRKDSSSACF
24BLEN24-316	P1J-S040KS-0080	DS162N	WH15ZLRKDSVITCF
24BLP24-316	P1J-S040SS-0015	DS162NV	WH16SMCF
24BMLS	P1J-S040SS-0015	DS163	WH16SMKD71
24BMLSS	P1J-S040SS-0025	DS163B	WH16SMKDOMD71
24BMTXS	P1J-S040SS-0025	DS163BD024D	WH16SMKDSCF
24BMTXSS	P1J-S040SS-0050	DS163BV	WH16SMKDSOMDCF
24C3MXS	P1J-S040SS-0050	DS163V	WH16SMKDSVITOMDCF
24C4OMLOS	P1J-S050DS-0005	DS201C	WH16SMOMD71
24C4OMXS	P1J-S050DS-0005	DS201CR	WH16SMOMDCF
24C4OMXSS	P1J-S050DS-0010	DS201CRP	WH16SR71
24C4OMXSV	P1J-S050DS-0010	DS201CRT	WH16SRCF
24C5OMXSS	P1J-S050DS-0015	DS201CRV	WH16SRCFX
24C6MK4S	P1J-S050DS-0015	DS201N	WH16SRKD71
24C6MK4SS	P1J-S050DS-0020	DS201NR	WH16SRKDOMD71
24C6MLOS	P1J-S050DS-0020	DS201NRE	WH16SRKDSCF
24C6MLOSS	P1J-S050DS-0025	DS600S	WH16SRKDSOMDCF
24C6MXSS	P1J-S050DS-0025	DSAE1007P07FLA	WH16SRKDSSA2CF
24CMTXSS	P1J-S050DS-0030	DSAE1007P07GLA	WH16SRKDSVITCF
24CPM1CF	P1J-S050DS-0030	DSAE207P04ELAF	WH16SRKDSVITOMDCF
24CPM1SS	P1J-S050DS-0040	DSAE207P04KLAF	WH16SROMD71
24CPM2CF	P1J-S050DS-0040	DSAE217E32DLAF	WH16SROMDCF
24CPM2SS	P1J-S050DS-0050	DSAE217E32FLAF	WH16SRVITCF
24E6MK4S	P1J-S050DS-0050	DSAEV207P04ELAF1112	WH16ZSMKD71
24E6MK4SS	P1J-S050DS-0060	DSAEV207P04KLAF	WH16ZSMKDSCF
24EE24-316	P1J-S050DS-0060	DSAN2117E32FPA	WH16ZSR71
24EMK4S	P1J-S050DS-0065	DSBA1002P07G	WH16ZSRKD71
24EMTXS	P1J-S050DS-0065	DSBA1002Z07B	WH16ZSRKDSCF
24EMTXSS	P1J-S050DS-0070	DSBA1002Z07K	WH18LM71
24ET24-316	P1J-S050DS-0070	DSBA1009P07B	WH18LMCF
24F3MK4S	P1J-S050DS-0080	DSBBP04/P07X989	WH18LMCFX
2-4F3MK4S	P1J-S050DS-0080	DSDA1002P07B	WH18LMKDSCF

2-4F3MK4SS	P1J-S050DS-0125	DSDA1002P07E	WH18LMKDSOMDCF
24F3MXS	P1J-S050DS-0125	DSDA1002P07G	WH18LMKDSOMDCFMK
24F3MXSS	P1J-S050PS-0015	DSDA1002P07K	WH18LMKDSVITOMDCF
24F42EDMLOS	P1J-S050PS-0015	DSDA1002P07KX973	WH18LMOMD71
24F42EDMLOSS	P1J-S050SS-0010	DSDA10061P07B	WH18LMOMDCF
24F42EDMXS	P1J-S050SS-0010	DSDA10061P07K	WH18LMVITCF
24F42EDMXSS	P1J-S050SS-0025	DSDA205E04E	WH18LR71
24F42EDMXSV	P1J-S050SS-0025	DSDB1012E25KX973	WH18LRCF
24F4OMXS	P1J-S063DS-0005	DSDTV202Z04K	WH18LRKD71
24F4OMXSS	P1J-S063DS-0005	DSDU1072E25G	WH18LRKDOMD71
24F5OMXS	P1J-S063DS-0010	DSDU1072E32G	WH18LRKDSCF
24F5OMXSS	P1J-S063DS-0010	DSDU1072E32K	WH18LRKDSDPR71CF
24F642EDMLS	P1J-S063DS-0015	DSDU1078E25K	WH18LRKDSOMDCF
24F642EDMXS	P1J-S063DS-0015	DSDU1078E32G	WH18LRKDSVITOMDCF
24F642EDMXSS	P1J-S063DS-0020	DSH081C	WH18LRMS
24F64OMXS	P1J-S063DS-0020	DSH081CR	WH18LROMD71
24F64OMXSS	P1J-S063DS-0025	DSH081CRT	WH18LROMDCF
24FA24N-316	P1J-S063DS-0025	DSH081CT	WH18LRVITCF
24FF24-316	P1J-S063DS-0030	DSH081N	WH18ZLMKDSCF
24FMK4S	P1J-S063DS-0030	DSH081NE	WH18ZLRKD71
2-4FMK4S	P1J-S063DS-0040	DSH081NR	WH18ZLRKDSCF
24FMTXB	P1J-S063DS-0040	DSH081NRT	WH18ZLRKDSSSACF
24FMTXS	P1J-S063DS-0050	DSH082C	WH18ZLRKDSVITCF
24FMTXSS	P1J-S063DS-0050	DSH082N	WH20SM71
24FNMK4S	P1J-S063DS-0080	DSH082NT	WH20SMCF
24FNMK4SS	P1J-S063DS-0080	DSH083A	WH20SMCFX
24FNMLSS	P1J-S063DS-0100	DSH083B	WH20SMKDSCF
24FNMTXS	P1J-S063DS-0100	DSH083BT	WH20SMKDSOMDCF
24FNMTXSS	P1J-S063SS-0015	DSH083N	WH20SMKDSOMDCFMK
24FSC24N-316	P1J-S063SS-0015	DSH083NT	WH20SMKDSVITOMDCF
24G4MXS	P1J-S063SS-0025	DSH084B	WH20SMOMD71
24G5Q1BSXK	P1J-S063SS-0025	DSH084N	WH20SMOMDCF
24H6MK4S	P1J-S063SS-0040	DSH085C1	WH20SR71
24H6MK4SS	P1J-S063SS-0040	DSH085C2	WH20SRCF
24HMK4S	P1K-8040AA-0080	DSH085C4	WH20SRKD71
24HMK4SS	P1K-8040AA-0080	DSH085C9	WH20SRKDOMD71
24HMLOSS	P1K-8040AA-0142	DSH101C	WH20SRKDSCF
24HMTXS	P1K-8040AA-0142	DSH101CR	WH20SRKDSOMDCF
24HMTXSS	P1K-8080AA-1558	DSH101CRT	WH20SRKDSVITCF
24JMK4S	P1K-8080AA-1558	DSH101N	WH20SRKDSVITOMDCF
24JMK4SS	P1K-8100AA-0091	DSH101NR	WH20SROMD71
24JMLOSS	P1K-8100AA-0091	DSH101NRD024LD	WH20SROMDCF
24JMTXSS	P1K-8100AA-0132	DSH101NRM	WH20ZSMKDSCF
24KAAN13MPN	P1K-8100AA-0132	DSH101NRV	WH20ZSRKD71
24KAAN13MPX	P1K-8100AA-0146	DSH102C	WH20ZSRKDSCF
24KAAN17MPN	P1K-8100AA-0146	DSH102N	WH22LM71
24KAAN17MPX	P1K-8100DG-0100	DSH102NT	WH22LMCF
24KAAW13MPN	P1K-8100DG-0100	DSH103A	WH22LMCFX
24KAAW13MPNS_01	P1K-8100DG-0400	DSH103B	WH22LMKDSCF
24KAAW13MPX	P1K-8100DG-0400	DSH103N	WH22LMKDSOMDCF
24KAAW13MPXS_99	P1K-8100DG-0450	DSH104B	WH22LMOMD71
24KAAW17MPN	P1K-8100DG-0450	DSH104N	WH22LMOMDCF
24KAAW17MPNS_02	P1K-S032/S50383	DSH121C	WH22LMVITCF

24KAAW17MPX	P1K-S032/S50383	DSH121CR	WH22LMVITOMDCF
24KAAW17MPXS_04	P1K-S032/S50950	DSH121N	WH22LR71
24KAAW17MPXS_99	P1K-S032/S50950	DSH121NR	WH22LRCF
24KAAW21MPN	P1K-S032AA-0010	DSH121NRE	WH22LRCFX
24KAAW21MPNS_01	P1K-S032AA-0010	DSH161CR	WH22LRKD71
24KAAW21MPX	P1K-S032AA-0080	DSH161NR	WH22LRKDOMD71
24KAAW21MPXS_99	P1K-S032AA-0080	DSH164H	WH22LRKDSCF
24KAAW21MVX	P1K-S032DA-0025	DSL081C	WH22LRKDSDPR71CF
24KAIN13MPN	P1K-S032DA-0025	DSL081CR	WH22LRKDSOMDCF
24KAIN13MPX	P1K-S032DA-0050	DSL081NR	WH22LRKDSOMDCFMK
24KAIN17MPX	P1K-S032DA-0050	DSL081NRM	WH22LRKDSVITCF
24KAIW13MPN	P1K-S032DA-0160	DSL081NRT	WH22LRKDSVITOMDCF
24KAIW13MPNS_03	P1K-S032DA-0160	DSL082C	WH22LROMD71
24KAIW13MPX	P1K-S032DT-0010	DSL082N	WH22LROMDCF
24KAIW13MPXS_99	P1K-S032DT-0010	DSL083A	WH22LRVITCF
24KAIW13MVX	P1K-S032DT-0025	DSL083AT	WH22ZLMKDSCF
24KAIW17MPN	P1K-S032DT-0025	DSL083B	WH22ZLMKDSSSACF
24KAIW17MPNS_02	P1K-S032DT-0035	DSL084B	WH22ZLR71
24KAIW17MPX	P1K-S032DT-0035	DSL084N	WH22ZLRKD71
24KAIW17MPXS_99	P1K-S032DT-0050	DSL101C	WH22ZLRKDSCF
24KAIW21MPN	P1K-S032DT-0050	DSL101CR	WH22ZLRKDSVITCF
24KAIW21MPNS_01	P1K-S032DT-0065	DSL101CRP	WH25SM71
24KAIW21MPX	P1K-S032DT-0065	DSL101CRT	WH25SMCF
24KAIW21MPXS_99	P1K-S032DT-0080	DSL101N	WH25SMKD71
24KATF06MPN	P1K-S032DT-0080	DSL101NR	WH25SMKDSCF
24KATF06MPNS_01	P1K-S032DT-0100	DSL101NRM	WH25SMKDSOMDCF
24KATF06MPX	P1K-S032DT-0100	DSL102C	WH25SMKDSVITOMDCF
24KATF06MPXS_03	P1K-S032DT-0125	DSL102CT	WH25SMOMDCF
24KATF06MPXS_99	P1K-S032DT-0125	DSL102N	WH25SR71
24KATF08MPN	P1K-S032DT-0160	DSL102NT	WH25SRCF
24KATF08MPNS_02	P1K-S032DT-0160	DSL103A	WH25SRKD71
24KATF08MPX	P1K-S032DT-0200	DSL103B	WH25SRKDOMD71
24KATF08MPXS_99	P1K-S032DT-0200	DSL103N	WH25SRKDSCF
24KATF08MVX	P1K-S032DT-0700	DSL104B	WH25SRKDSOMDCF
24KATF09MPX	P1K-S032DT-0700	DSL104E1	WH25SRKDSVITCF
24KATF09MPXS_02	P1K-S032RT-0010	DSL104N	WH25SRKDSVITOMDCF
24KATF10MPN	P1K-S032RT-0010	DSL105C1	WH25SROMD71
24KATF10MPNS_02	P1K-S032ST-0025	DSL105C2	WH25SROMDCF
24KATF10MPX	P1K-S032ST-0025	DSL105C4	WH25ZSM71
24KATF10MPXS_99	P1K-S032ST-0050	DSL106C6	WH25ZSMKDSCF
24KATF13MPN	P1K-S032ST-0050	DSL106C6M	WH25ZSRKD71
24KATF13MPX	P1K-S040AA-0100	DSMN2112E32E10PBP	WH25ZSRKDSCF
24KATP06MPX	P1K-S040AA-0100	DSMN212P25K11X29	WH28LM71
24KATP10MPX	P1K-S040DA-0080	DSMN215E32G10PBF	WH28LMCF
24KEAK13MPN	P1K-S040DA-0080	DSVW04LLMCF	WH28LMCFX
24KEAK13MPNS_99	P1K-S040DA-0125	DSVW06LMCF	WH28LMKD71
24KEAK17MPN	P1K-S040DA-0125	DSVW06LMOMDCF	WH28LMKDSCF
24KEAK21MPN	P1K-S040DF-0170	DSVW06LRCF	WH28LMKDSOMDCF
24KEAK21MPNS_99	P1K-S040DF-0170	DSVW06LROMDCF	WH28LMOMD71
24KEAN17MPN	P1K-S040DG-0120	DSVW06SMCF	WH28LMOMDCF
24KEIW13MPN	P1K-S040DG-0120	DSVW06SRCF	WH28LMVITCF
24KEIW13MPNS_99	P1K-S040DG-0125	DSVW06SROMDCF	WH28LR71
24KEIW17MPN	P1K-S040DG-0125	DSVW08LMCF	WH28LRCF

24KEIW17MPNS_99	P1K-S040DG-0170	DSVW08LMOMDCF	WH28LRDPR71CF
24KEIW21MPN	P1K-S040DG-0170	DSVW08LRCF	WH28LRKD71
24KEIW21MPNS_99	P1K-S040DT-0008	DSVW08LRCFX	WH28LRKDOMD71
24KETF06MPN	P1K-S040DT-0008	DSVW08LROMDCF	WH28LRKDSCF
24KETF08MPN	P1K-S040DT-0025	DSVW08SMCF	WH28LRKDSDPR71CF
24KETF08MPNS_99	P1K-S040DT-0025	DSVW08SMOMDCF	WH28LRKDSOMDCF
24KETF09MPN	P1K-S040DT-0040	DSVW08SRCF	WH28LRKDSVITCF
24KETF10MPN	P1K-S040DT-0040	DSVW08SROMDCF	WH28LRKDSVITOMDCF
24KETF10MPNS_99	P1K-S040DT-0050	DSVW10LMCF	WH28LROMD71
24KETF13MPN	P1K-S040DT-0050	DSVW10LMDA6C+AQUA	WH28LROMDCF
24LEMQ1SS	P1K-S040DT-0080	DSVW10LMOMDCF	WH28LRVITCF
24LEMQ2SS	P1K-S040DT-0080	DSVW10LRCF	WH28ZLM71
24LOEMQ1CF	P1K-S040DT-0100	DSVW10LRCFX	WH28ZLMKDSCF
24M1SC24-316	P1K-S040DT-0100	DSVW10LROMDCF	WH28ZLRKD71
24M48C87OMLOS	P1K-S040DT-0125	DSVW10SMCF	WH28ZLRKDSCF
24M48C87OMXS	P1K-S040DT-0125	DSVW10SRCF	WH28ZLRKDSVITCF
24M48C8OMXS	P1K-S040DT-0142	DSVW10SROMDCF	WH3/8OD14X1.5SLSTL1
24M48F687OMXS	P1K-S040DT-0142	DSVW12LMCF	WH30SMCF
24M48F687OMXSS	P1K-S040DT-0160	DSVW12LMOMDCF	WH30SMKD71
24M48F82EDMLOS	P1K-S040DT-0160	DSVW12LRCF	WH30SMKDOMD71
24M48F82EDMXS	P1K-S040DT-0170	DSVW12LRCFX	WH30SMKDSCF
24M48F87OMLOS	P1K-S040DT-0170	DSVW12LROMDCF	WH30SMKDSOMDCF
24M48F87OMXS	P1K-S040DT-0200	DSVW12SMCF	WH30SMOMDCF
24M48F8OMXS	P1K-S040DT-0200	DSVW12SMOMDCF	WH30SR71
24M48V87OMLOS	P1K-S040DT-0250	DSVW12SRCF	WH30SRCF
24MA24N-316	P1K-S040DT-0250	DSVW12SROMDCF	WH30SRKD71
24MSC24K-316	P1K-S040DT-0300	DSVW14SMCF	WH30SRKDOMD71
24MSC24N-316	P1K-S040DT-0300	DSVW14SMOMDCF	WH30SRKDSCF
24MSC24R-316	P1K-S040DT-0650	DSVW14SRCF	WH30SRKDSOMDCF
24MSEL24N-316	P1K-S040DT-0650	DSVW14SROMDCF	WH30SRKDSVITOMDCF
24NU24-316	P1K-S040KT-0025	DSVW15LMCF	WH30SROMDCF
24P-0002	P1K-S040KT-0025	DSVW15LMOMDCF	WH30ZSMKDSCF
24P-0019	P1K-S040ST-0025	DSVW15LRCF	WH30ZSRKDSCF
24P-0099	P1K-S040ST-0025	DSVW15LRCFX	WH35LMCF
24P1-101013011	P1K-S040ST-0050	DSVW15LROMDCF	WH35LMKDSCF
24P1-102013011	P1K-S040ST-0050	DSVW16SMCF	WH35LMKDSOMDCF
24P1-102023011	P1K-S050AA-0080	DSVW16SMOMDCF	WH35LMOMDCF
24P1-103012013	P1K-S050AA-0080	DSVW16SRCF	WH35LR71
24P1-103013011	P1K-S050AA-0125	DSVW16SROMDCF	WH35LRCF
24P1-103023011	P1K-S050AA-0125	DSVW18LMCF	WH35LRKD71
24P1-104013011	P1K-S050AA-0160	DSVW18LMCFX	WH35LRKDSCF
24P1-104023011	P1K-S050AA-0160	DSVW18LMOMDCF	WH35LRKDSOMDCF
24P1-104033011	P1K-S050DA-0200	DSVW18LRCF	WH35LRKDSVITOMDCF
24P1-115013011	P1K-S050DA-0200	DSVW18LRCFX	WH35LROMD71
24P1-115023011	P1K-S050DF-0125	DSVW18LROMDCF	WH35LROMDCF
24P1-117013011	P1K-S050DF-0125	DSVW20SMCF	WH35ZLMKDSCF
24P1-117023011	P1K-S050DG-0125	DSVW20SMOMDCF	WH35ZLRKDSCF
24P1-117033011	P1K-S050DG-0125	DSVW20SRCF	WH38SMCF
24P1-118013011	P1K-S050DT-0025	DSVW20SROMDCF	WH38SMKDSCF
24P1-118023011	P1K-S050DT-0025	DSVW22LMCF	WH38SMKDSOMDCF
24P1-121000013	P1K-S050DT-0050	DSVW22LMCFX	WH38SMOMDCF
24P1-121013013	P1K-S050DT-0050	DSVW22LMOMDCF	WH38SR71
24P1-121023011	P1K-S050DT-0060	DSVW22LRCF	WH38SRCF

24P1-121023013	P1K-S050DT-0060	DSVW22LRCFX	WH38SRKD71
24P2-103023011	P1K-S050DT-0070	DSVW22LROMDCF	WH38SRKDOMD71
24P2-104013011	P1K-S050DT-0070	DSVW25SMCF	WH38SRKDSCF
24P2-115013011	P1K-S050DT-0075	DSVW25SRCF	WH38SRKDSOMDCF
24P2-115023011	P1K-S050DT-0075	DSVW25SROMDCF	WH38SROMD71
24P2-117013011	P1K-S050DT-0080	DSVW28LMCF	WH38SROMDCF
24P2-117023011	P1K-S050DT-0080	DSVW28LMOMDCF	WH38ZSMKDSCF
24P2-117033011	P1K-S050DT-0100	DSVW28LRCF	WH38ZSRKDSCF
24P2-118013011	P1K-S050DT-0100	DSVW28LRCFX	WH42LMKDSCF
24P2-118023011	P1K-S050DT-0125	DSVW28LROMDCF	WH42LMKDSOMDCF
24P2-119023013	P1K-S050DT-0125	DSVW30SMOMDCF	WH42LMOMD71
24P2-121013013	P1K-S050DT-0150	DSVW30SRCF	WH42LMOMDCF
24P2-121023013	P1K-S050DT-0150	DSVW30SROMDCF	WH42LR71
24P2-121033013	P1K-S050DT-0160	DSVW35LMCF	WH42LRCF
24PFMQ1CF	P1K-S050DT-0160	DSVW35LRCF	WH42LRKD71
24PFMQ2CF	P1K-S050DT-0200	DSVW35LROMDCF	WH42LRKDOMD71
24PMQ1CF	P1K-S050DT-0200	DSVW38SMCF	WH42LRKDSCF
24PMQ2CF	P1K-S050DT-0250	DSVW38SRCF	WH42LRKDSOMDCF
24PNMK4S	P1K-S050DT-0250	DSVW38SROMDCF	WH42LROMD71
24PNMK4SS	P1K-S050DT-0300	DSVW42LMOMDCF	WH42LROMDCF
24PNMLOS	P1K-S050DT-0300	DSVW42LRCF	WH42ZLRKDSCF
24PNMLOSS	P1K-S050RT-0025	DSVW42LROMDCF	WHLC-76 CRIMPED
24PNMTXSS	P1K-S050RT-0025	DTKS01800	WHO18LMOMDVITCFVOL
2-4R FBZ-SS	P1K-S063DA-0050	DTKS02400	WHP-98-001
24R4OMLOS	P1K-S063DA-0050	DU16	WHP-98-001
24RHDMLOS0.2BCF	P1K-S063DA-0075	DUDB202E15E	WHP-98-015
24RHDMLOS5BCF	P1K-S063DA-0075	DUDB202E15G	WHP-98-015
24RHDMLOSCF	P1K-S063DA-0080	DUDB202E15K	WHP-98-017
24RHDMTXSCF	P1K-S063DA-0080	DUDB202R15K	WHP-98-017
24RHV42EDMLOSCF	P1K-S063DA-0160	DUR1,0L06LKA1	WHP-98-018
24RHV42EDMXSCF	P1K-S063DA-0160	DUR1,6L06PK11	WHP-98-018
24RU8-316	P1K-S063DA-0200	DUR12L06PK11	WHP-98-019
24SC24-316	P1K-S063DA-0200	DUR18L06PK11	WHP-98-019
24TT4LS	P1K-S063DA-0350	DUR18L06PKA1	WHP-98-020
24TT4MXSS	P1K-S063DA-0350	DUR3,2L06PK11	WHP-98-020
24TT4XS	P1K-S063DF-0050	DUR6,3L06PK11	WHP-98-027
24TTP4XS	P1K-S063DF-0050	DURC06L71X	WHP-98-027
24TUR20-316	P1K-S063DG-0050	DURC06LX	WHP-98-028
24V4OMXS	P1K-S063DG-0050	DURC08L71X	WHP-98-028
24WB1Q1PSX	P1K-S063DT-0025	DURC08LX	WHP-98-041
24WLNMS	P1K-S063DT-0025	DURC10L71X	WHP-98-041
24WMK4WL4NMS	P1K-S063DT-0050	DURC10LX	WHP-98-043
24WMTXWLNMS	P1K-S063DT-0050	DURC12LX	WHP-98-043
24WMTXWLNMSS	P1K-S063DT-0055	DURC15L71X	WHP-98-044
24XEMQ1CF	P1K-S063DT-0055	DURC15LX	WHP-98-044
24XEMQ1SS	P1K-S063DT-0080	DURC18L71X	WHP-98-046
24XEMQ2SS	P1K-S063DT-0080	DURC18LX	WHP-98-046
250 RF	P1K-S063DT-0100	DURC22L71X	WHP-98-060
250 RF	P1K-S063DT-0100	DURC22LX	WHP-98-060
25000-43	P1K-S063DT-0125	DURC28L71X	WHP-98-062
25009-24	P1K-S063DT-0125	DURC28LX	WHP-98-062
2500-PSN	P1K-S063DT-0160	DURC35L71X	WHP-98-066
2500-PSN	P1K-S063DT-0160	DURC35LX	WHP-98-066

2500-PSV	P1K-S063DT-0200	DURC6LX	WHP-98-067
2500-PSV	P1K-S063DT-0200	DV06L	WHP-98-067
25010-00620	P1K-S063DT-0250	DV06LMDMS	WHP-98-068
25010-00620	P1K-S063DT-0250	DV06LX	WHP-98-068
2502FIL	P1K-S063DT-0300	DV08L	WHP-98-080
2502FIL	P1K-S063DT-0300	DV08LMDMS	WHP-98-080
2503FIL	P1K-S063DT-0320	DV08LX	WHP-98-084
2503FIL	P1K-S063DT-0320	DV10/05	WHP-98-084
25048-01500	P1K-S063DT-0670	DV10/05S	WHP-98-088
25048-01500	P1K-S063DT-0670	DV10L	WHP-98-088
25049-01500	P1K-S063SA-0050	DV10LMDMS	WHP-98-089
25049-01500	P1K-S063SA-0050	DV10LX	WHP-98-089
2504FIL	P1K-S063ST-0025	DV12L	WHP-98-090
2504FIL	P1K-S063ST-0025	DV12LMDMS	WHP-98-090
2505FIL	P1K-S063ST-0040	DV12LX	WHP-98-094
2505FIL	P1K-S063ST-0040	DV13/06	WHP-98-094
25062-00220	P1K-S063ST-0050	DV13/08	WHP-98-095
25062-00220	P1K-S063ST-0050	DV13/08S_02	WHP-98-095
2507-16-16	P1K-S080AA-0080	DV13/10	WHP-98-098
25077-00624	P1K-S080AA-0080	DV13/10S	WHP-98-098
25077-00624	P1K-S080AA-0100	DV15L	WHP-98-099
2507FIL	P1K-S080AA-0100	DV15LMDMS	WHP-98-099
2507FIL	P1K-S080AA-0250	DV15LX	WHP-98-100
2508FIL	P1K-S080AA-0250	DV17/12	WHP-98-100
2508FIL	P1K-S080AA-0330	DV18L	WHP-98-1000-G
25094-00624	P1K-S080AA-0330	DV18LMDMS	WHP-98-1000-G
25094-00624	P1K-S080AT-0100	DV18LX	WHP-98-102
25099FIL	P1K-S080AT-0100	DV21/16	WHP-98-102
25099FIL	P1K-S080DA-0065	DV21/16S	WHP-98-109
2509FIL	P1K-S080DA-0065	DV22L	WHP-98-109
2509FIL	P1K-S080DA-0100	DV22LMDMS	WHP-98-300-G
250CMS	P1K-S080DA-0100	DV22LX	WHP-98-300-G
250CMS	P1K-S080DA-0170	DV28L	WHP-98-400-G
250CMTA	P1K-S080DA-0170	DV28LMDMS	WHP-98-400-G
250CMTA	P1K-S080DA-0250	DV28LX	WHP-98-500-G
250CMTF	P1K-S080DA-0250	DV35L	WHP-98-500-G
250CMTF	P1K-S080DA-0700	DV35LMDMS	WHP-98-799
250CMTL	P1K-S080DA-0700	DV35LX	WHP-98-799
250CMTL	P1K-S080DT-0025	DVAA06L	WHP-98-899
250CS	P1K-S080DT-0025	DVAA06LX	WHP-98-899
250CS	P1K-S080DT-0050	DVAA08LX	WHP-98-999
250CTF	P1K-S080DT-0050	DVAA10L	WHP-98-999
250CTF	P1K-S080DT-0080	DVAA10LX	WI10
250FIL	P1K-S080DT-0080	DVAA12L	WI10E
250FIL	P1K-S080DT-0100	DVAA12LX	WI10N
250RS	P1K-S080DT-0100	DVAA15L	WI13
250RS	P1K-S080DT-0160	DVAA15LX	WI13E
2510 RV	P1K-S080DT-0160	DVAA18L	WI13N
2510 RVUV	P1K-S080DT-0200	DVAA18LX	WI17
2510 RVUV	P1K-S080DT-0200	DVAA22L	WI17E
2510 UV	P1K-S080DT-0250	DVAA22LX	WI17N
2510 UV	P1K-S080DT-0250	DVAA28L	WI21
2510 V	P1K-S080DT-0330	DVAA28LX	WI21E

2510 V	P1K-S080DT-0330	DVAE06LX	WI21N
2510 VUV	P1K-S080KG-0080	DVAE08L	WI26
2510 VUV	P1K-S080KG-0080	DVAE08LX	WI26E
25105-00270	P1K-S080KG-0122	DVAE10L	WI26N
25105-00270	P1K-S080KG-0122	DVAE10LX	WI33
2510-QC	P1K-S080ST-0050	DVAE12L	WIKA-12016748
2511 12 12	P1K-S080ST-0050	DVAE12LX	WIKA-12019810
2511 12 15	P1K-S100BT-0200	DVAE15L	WIKA-12026298
2511 12 19	P1K-S100BT-0200	DVAE15LX	WIKA-12034703
25136-00700	P1K-S100DA-0100	DVAE18L	WIKA-12084131
25136-00700	P1K-S100DA-0100	DVAE18LMMS	WIKA-12105392
25136-00800	P1K-S100DA-0200	DVAE18LX	WIKA-12117391
25136-00800	P1K-S100DA-0200	DVAE22L	WIKA-12131903
2513FIL	P1K-S100DA-0750	DVAE22LX	WIKA-12154181
2513FIL	P1K-S100DA-0750	DVAE28L	WIKA-12155897
25143-06000	P1K-S100DA-0900	DVAE28LX	WIKA-12155927
25143-06000	P1K-S100DA-0900	DVE08-1.0/0-P	WIKA-12155951
25155FIL	P1K-S100DG-0450	DVGE06LMCF	WIKA-12155986
25155FIL	P1K-S100DG-0450	DVGE06LMOMDCF	WIKA-12185621
2516-QC	P1K-S100DH-0450	DVGE06LRCF	WIKA-12189368
25175-01500	P1K-S100DH-0450	DVGE06LROMDCF	WIKA-12229016
25175-01500	P1K-S100DT-0025	DVGE06SMCF	WIKA-12245038
25177-00850	P1K-S100DT-0025	DVGE06SMOMDCF	WIKA-12289737
25177-00850	P1K-S100DT-0050	DVGE06SMVITOMDCF	WIKA-12347681
25181-01480	P1K-S100DT-0050	DVGE06SRCF	WIKA-12432245
25181-01480	P1K-S100DT-0080	DVGE06SROMDCF	WIKA-12495621
2520 RFV2	P1K-S100DT-0080	DVGE06ZLMCF	WIKA-12795021
2520 RHUV	P1K-S100DT-0100	DVGE06ZLRCF	WIKA-12820300
2520 RHUV	P1K-S100DT-0100	DVGE06ZSMCF	WIKA-7134902
2520 RUV	P1K-S100DT-0125	DVGE06ZSRCF	WIKA-7134936
2520 RUV	P1K-S100DT-0125	DVGE08LMCF	WIKA-7134944
2520 RV	P1K-S100DT-0200	DVGE08LMOMDCF	WIKA-7134961
2520 UV	P1K-S100DT-0200	DVGE08LRCF	WIKA-7134979
2520 UV	P1K-S100DT-0300	DVGE08LROMDCF	WIKA-7134987
2520 V	P1K-S100DT-0300	DVGE08SMCF	WIKA-7134995
2520 V	P1K-S100DT-0320	DVGE08SMOMDCF	WIKA-7135010
2526FIL	P1K-S100DT-0320	DVGE08SRCF	WIKA-7135036
2526FIL	P1K-S100DT-0500	DVGE08SROMDCF	WIKA-7164224
2526-QC	P1K-S100DT-0500	DVGE08ZLMCF	WIKA-7173125
2527FIL	P1K-S100ST-0050	DVGE08ZLRCF	WIKA-7194718
2527FIL	P1K-S100ST-0050	DVGE08ZSMCF	WIKA-7197504
254TA	P1K-S125DA-0600	DVGE08ZSRCF	WIKA-7201153
254TA	P1K-S125DA-0600	DVGE10LMCF	WIKA-7203228
254TF	P1K-S125DT-0250	DVGE10LMOMDCF	WIKA-7240591
254TF	P1K-S125DT-0250	DVGE10LRCF	WIKA-7248673
2567FIL	P1M016VEMA7G010	DVGE10LROMDCF	WIKA-7260027
2567FIL	P1M016VEMA7G010	DVGE10LRVITCF	WIKA-7266069
2575FIL	P1M020TEMA7G015	DVGE10SMCF	WIKA-7273537
2575FIL	P1M020TEMA7G015	DVGE10SMOMDCF	WIKA-7276986
2580N-06V12	P1M020VDMA7G080	DVGE10SRCF	WIKA-7283427
2580N-08V10-MSHA	P1M020VDMA7G080	DVGE10SROMDCF	WIKA-7292982
2580N-08V12	P1M020VDMA7G200	DVGE10ZLMCF	WIKA-7293066
2580N-12V12	P1M020VDMA7G200	DVGE10ZLRCF	WIKA-7310980

2580N-12V12-DL	P1M032VDMA7G005	DVGE10ZSMCF	WIKA-7318344
2585FIL	P1M032VDMA7G005	DVGE10ZSRCF	WIKA-7318379
2585FIL	P1M040VDMA7G025	DVGE12LMCF	WIKA-7322678
2587FIL	P1M040VDMA7G025	DVGE12LMOMDCF	WIKA-7327921
2587FIL	P1M040VDMA7J320	DVGE12LRCF	WIKA-7331111
25DTA10P50G24A	P1M040VDMA7J320	DVGE12LROMDCF	WIKA-7332690
25DTAXXP50G24A	P1M050VDGA8G080	DVGE12SMCF	WIKA-7333964
25DTEA06	P1M050VDGA8G080	DVGE12SMOMDCF	WIKA-7344965
25DTEA10	P1M050VDMA7G010	DVGE12SMVITOMDCF	WIKA-7344982
25DTEA10Q	P1M050VDMA7G010	DVGE12SRCF	WIKA-7350418
25FAAK13SPN	P1M050VDMA7G250	DVGE12SROMDCF	WIKA-7351694
25KAAD14MPN	P1M050VDMA7G250	DVGE12ZLMCF	WIKA-7378339
25KAAD14RVXS	P1M050VDMA7J205	DVGE12ZLRCF	WIKA-7378355
25KAAD16MPN	P1M050VDMA7J205	DVGE12ZSMCF	WIKA-7394521
25KAAD16MVN	P1M050VDMA8G050	DVGE12ZSRCF	WIKA-7394564
25KAAD18BPXS	P1M050VDMA8G050	DVGE14SMCF	WIKA-7429600
25KAAD18MPN	P1M050VKGA8G080	DVGE14SRCF	WIKA-7507619
25KAAK13BENS	P1M050VKGA8G080	DVGE14ZSRCF	WIKA-7515531
25KAAK13BPN	P1M063VDGA7G080	DVGE15LMCF	WIKA-7535655
25KAAK13BPNS_04	P1M063VDGA7G080	DVGE15LMOMDCF	WIKA-7539456
25KAAK13BPNS_05	P1M063VDMA8G050	DVGE15LRCF	WK10/06
25KAAK13BPNS_06	P1M063VDMA8G050	DVGE15LROMDCF	WK10/08
25KAAK13MPN	P1M063VDMA8J025	DVGE15LROMDVITCF	WK13/06
25KAAK13MPNS_06	P1M063VDMA8J025	DVGE15ZLMCF	WK13/08
25KAAK13MPX	P1M-4DMB	DVGE15ZLRCF	WK13/08N
25KAAK13MPXS_04	P1M-4DMB	DVGE16SMCF	WKS-4-BLK
25KAAK13MVN	P1M-4DME	DVGE16SMOMDCF	WKS-4-BLU
25KAAK13SPN	P1M-4DME	DVGE16SRCF	WKS-5-BLK
25KAAK17BPN	P1M-4DMT	DVGE16SROMDCF	WKS-5-BLU
25KAAK17BPX	P1M-4DMT	DVGE16ZSMCF	WKS-6-BLK
25KAAK17BPX0	P1M-4FMB	DVGE16ZSRCF	WKS-6-BLU
25KAAK17BPX3	P1M-4FMB	DVGE18LMCF	WKS-8-BLK
25KAAK17BPX6	P1M-4FME	DVGE18LMOMDCF	WKS-8-BLU
25KAAK17BPXS_03	P1M-4FME	DVGE18LRCF	WLITHCR1
25KAAK17MPN	P1M-4FMF	DVGE18LROMDCF	WM1-06A1
25KAAK17MPNS_04	P1M-4FMF	DVGE18LRVITOMDCF	WM10A
25KAAK17MPNS_06	P1M-4FMT	DVGE18ZLMCF	WM1A1
25KAAK17MPNS_09	P1M-4FMT	DVGE18ZLRCF	WM5A
25KAAK17MPX	P1M-4HMB	DVGE20SMCF	WN3-010-10M060/075/11/23
25KAAK17MVN	P1M-4HMB	DVGE20SMOMDCF	WN3-040-07M060/075/11/23
25KAAK17SPN	P1M-4HME	DVGE20SRCF	WN4-005-07M095/130/19/40
25KAAK21BPN	P1M-4HME	DVGE20SROMDCF	WN4-008-07M080/100/14/30
25KAAK21BPX	P1M-4HMF	DVGE20ZSMCF	WN4-008-10M095/115/19/40
25KAAK21BPXS	P1M-4HMF	DVGE20ZSRCF	WN4-010-07M080/100/19/40
25KAAK21BVC	P1M-4HMT	DVGE22LMCF	WN4-020-10M080/100/14/30
25KAAK21MEN	P1M-4HMT	DVGE22LMOMDCF	WN4-032-10M095/115/19/40
25KAAK21MPN	P1M-4JMB	DVGE22LRCF	WN5-004-10M095/130/19/40
25KAAK21MPNS_05	P1M-4JMB	DVGE22LROMDCF	WN5-032-07M095/130/19/40
25KAAK21MPX	P1M-4JME	DVGE22LRVITCF	WN7-032-10M130/165/24/50
25KAAK21MVN	P1M-4JME	DVGE22ZLMCF	WN7-040-10M130/165/24/50
25KAAK21SPN	P1M-4JMF	DVGE22ZLRCF	WNPMB12
25KAAM14RVX	P1M-4JMF	DVGE25SMCF	WP-1A
25KAAM16EVX	P1M-4JMFS	DVGE25SMOMDCF	WPB10

25KAAM18RVX	P1M-4JMFS	DVGE25SRCF	WPB12
25KAAN13BPX0	P1M-4KMFS	DVGE25SROMDCF	WPB14
25KAAN13BPX3	P1M-4KMFS	DVGE25ZSMCF	WPB4
25KAAN13BPX6	P1M-4MMFS	DVGE25ZSRCF	WPB6
25KAAN13BPX8	P1M-4MMFS	DVGE28LMCF	WPB8
25KAAN13MPN	P1M-6DRN	DVGE28LMOMDCF	WPH-6
25KAAN13MPNS_02	P1M-6DRN	DVGE28LRCF	WPMB4
25KAAN13MPX	P1M-6DRV	DVGE28LROMDCF	WPMB6
25KAAN13RVX	P1M-6DRV	DVGE28ZLMCF	WPNM-12-12
25KAAN13RVX0	P1M-6FRN	DVGE28ZLRCF	WPNM-16-16
25KAAN13RVX3	P1M-6FRN	DVGE30SMCF	WPNM-6-6
25KAAN13RVX6	P1M-6HRN	DVGE30SMOMDCF	WPNM-8-8
25KAAN13RVX8	P1M-6HRN	DVGE30SRCF	WPT-1
25KAAN17BPX	P1M-6HRV	DVGE30SROMDCF	WPT-3
25KAAN17BPX0	P1M-6HRV	DVGE30ZSMCF	WPT-4
25KAAN17BPX6	P1M-6JRN	DVGE30ZSRCF	WPT-5
25KAAN17BPX8	P1M-6JRN	DVGE35LMCF	WR12/10LCFX
25KAAN17MPN	P1M-6JRV	DVGE35LMOMDCF	WRA145
25KAAN17MPX	P1M-6JRV	DVGE35LRCF	WRA170
25KAAN21MPN	P1M-6KRN	DVGE35LROMDCF	WRA185
25KAAN21MPX	P1M-6KRN	DVGE35ZLMCF	WRA205
25KAAW13BPC6S	P1M-6KRV	DVGE35ZLRCF	WRA225
25KAAW13BPN	P1M-6KRV	DVGE38SMCF	WRA245
25KAAW13BPN0	P1M-6LRN	DVGE38SRCF	WRA265
25KAAW13BPN3	P1M-6LRN	DVGE38SROMDCF	WRA305
25KAAW13BPN6	P1M-6MRN	DVGE42LRCF	WRA340
25KAAW13BPN8	P1M-6MRN	DVGE42LROMDCF	WRA365
25KAAW13BPX0	P1M-6NRN	DVWE06LMCF	WRA425
25KAAW13BPX3	P1M-6NRN	DVWE06LMOMDCF	WRA455
25KAAW13BPX6	P1M-6NRV	DVWE06LRCF	WRA490
25KAAW13BPX8	P1M-6NRV	DVWE06LROMDCF	WRA525
25KAAW13EVX	P1M-6PRN	DVWE06SMCF	WRA600
25KAAW13MPN	P1M-6PRN	DVWE06SMOMDCF	WRC1212
25KAAW13MPXS_03	P1M-6PRV	DVWE06SRCF	WRC1313
25KAAW13MVN	P1M-6PRV	DVWE06SROMDCF	WRC1415
25KAAW13RVX	P1M-6QRN	DVWE06ZSRCF	WRC1718
25KAAW13RVX8	P1M-6QRN	DVWE08LMCF	WRC1819
25KAAW13RVXS	P1PG032DS7G0050	DVWE08LMOMDCF	WRC2021
25KAAW17BPN	P1PG032DS7G0050	DVWE08LRCF	WRC2223
25KAAW17BPN0	P1PG040DS7G0040	DVWE08LROMDCF	WRC2425
25KAAW17BPN3	P1PG040DS7G0040	DVWE08LRVITCF	WRC2526
25KAAW17BPN6	P1PG050DS7G0025	DVWE08SMCF	WRC2728
25KAAW17BPN8	P1PG050DS7G0025	DVWE08SMOMDCF	WRC2829
25KAAW17BPX0	P1PG050DS7G0030	DVWE08SRCF	WRC3031
25KAAW17BPX3	P1PG050DS7G0030	DVWE08SROMDCF	WRC3435
25KAAW17BPX6	P1PS020DS7G0015	DVWE08ZLMCF	WRC3637
25KAAW17BPX8	P1PS020DS7G0015	DVWE08ZLRCF	WRC3839
25KAAW17EEX	P1PS020DS7G0020	DVWE10LMCF	WRC4445
25KAAW17EEXS	P1PS020DS7G0020	DVWE10LMOMDCF	WRC4547
25KAAW17EVX	P1PS020DS7G0025	DVWE10LRCF	WRC4850
25KAAW17MPN	P1PS020DS7G0025	DVWE10LROMDCF	WRC5153
25KAAW17MVN	P1PS020DS7G0040	DVWE10LRVITCF	WRC5456
25KAAW17RVX	P1PS020DS7G0040	DVWE10SMCF	WRC6365

25KAAW17RVXS_01	P1PS020DS7G0050	DVWE10SMOMDCF	WRC6971
25KAAW21BPN0	P1PS020DS7G0050	DVWE10SRCF	WRF085
25KAAW21BPN3	P1PS020DS7G0080	DVWE10SROMDCF	WRF105
25KAAW21BPN6	P1PS020DS7G0080	DVWE10SRVITOMDCF	WRF125
25KAAW21BPN8	P1PS020DS7G0100	DVWE10ZLRCF	WRF145
25KAAW21BPX0	P1PS020DS7G0100	DVWE12LMCF	WRF165
25KAAW21BPX3	P1PS025DS7G0025	DVWE12LMOMDCF	WRF205
25KAAW21BPX6	P1PS025DS7G0025	DVWE12LRCF	WRF22F06P040G1
25KAAW21BPX8	P1PS025DS7G0050	DVWE12LROMDCF	WRF42A06G1
25KAAW21EEX	P1PS025DS7G0050	DVWE12LRVITCF	WRK-10-3S
25KAAW21EEXS_01	P1PS025DS7G0080	DVWE12SMCF	WRK-16-3S
25KAAW21EVX	P1PS025DS7G0080	DVWE12SRCF	WRVZ-06-CCB
25KAAW21MEC	P1PS025DS8G0070	DVWE12SROMDCF	WRVZ-10S-CC
25KAAW21MPN	P1PS025DS8G0070	DVWE12ZLRCF	WS05
25KAAW21MPNS_03	P1PS032DS7G0010	DVWE12ZSRCF	WS05A
25KAAW21REX	P1PS032DS7G0010	DVWE14SRCF	WS0-C8-000
25KAAW21RVX	P1PS032DS7G0015	DVWE15LMCF	WS0-C8-000
25KAAW21RVXS	P1PS032DS7G0015	DVWE15LMOMDCF	WS0-CC-000
25KAIM14MPN	P1PS032DS7G0020	DVWE15LRCF	WS0-CC-000
25KAIM16MPN	P1PS032DS7G0020	DVWE15LROMDCF	WS10
25KAIM18MPN	P1PS032DS7G0025	DVWE15LRVITOMDCF	WS10A
25KAIN13BPX0	P1PS032DS7G0025	DVWE15ZLRCF	WS10N
25KAIN13BPX3	P1PS032DS7G0040	DVWE16SMCF	WS13
25KAIN13BPX6	P1PS032DS7G0040	DVWE16SRCF	WS13A
25KAIN13BPX8	P1PS032DS7G0050	DVWE16SROMDCF	WS13N
25KAIN13MPN	P1PS032DS7G0050	DVWE16SRVITCF	WS17
25KAIN13MPNS_02	P1PS032DS7G0060	DVWE16ZSRCF	WS17A
25KAIN13MPX	P1PS032DS7G0060	DVWE18LMCF	WS17N
25KAIN13RVX	P1PS032DS7G0100	DVWE18LMOMDCF	WSA-02-FM0
25KAIN17BPX0	P1PS032DS7G0100	DVWE18LRCF	WSA-02-FM0
25KAIN17BPX3	P1PS032DS7G0200	DVWE18LROMDCF	WSA-04-FM0
25KAIN17BPX6	P1PS032DS7G0200	DVWE20SMCF	WSA-04-FM0
25KAIN17BPX8	P1PS032DS8G0050	DVWE20SMOMDCF	WSA-C2-F00
25KAIN17MPN	P1PS032DS8G0050	DVWE20SRCF	WSA-C2-F00
25KAIN17MPX	P1PS032DS8G0080	DVWE22LMCF	WSA-C2-FM0
25KAIN21EVX	P1PS032DS8G0080	DVWE22LMOMDCF	WSA-C2-FM0
25KAIN21MPN	P1PS032DSTG0025	DVWE22LMVITCF	WSA-C2-M00
25KAIN21MPX	P1PS032DSTG0025	DVWE22LRCF	WSA-C2-M00
25KAIW13BPN	P1PS040DS7G0005	DVWE22LROMDCF	WSA-C3-M00
25KAIW13BPN0	P1PS040DS7G0005	DVWE22LRVITOMDCF	WSA-C3-M00
25KAIW13BPN3	P1PS040DS7G0010	DVWE25SMCF	WSA-C4-FM0
25KAIW13BPN6	P1PS040DS7G0010	DVWE25SMOMDCF	WSA-C4-FM0
25KAIW13BPN8	P1PS040DS7G0025	DVWE25SRCF	WSA-C4-M00
25KAIW13BPNS	P1PS040DS7G0025	DVWE25SROMDCF	WSA-C4-M00
25KAIW13BPX	P1PS040DS7G0040	DVWE28LMOMDCF	WSA-C6-FM0
25KAIW13BPX0	P1PS040DS7G0040	DVWE28LRCF	WSA-C6-FM0
25KAIW13BPX3	P1PS040DS7G0050	DVWE28LROMDCF	WSA-C8-FM0
25KAIW13BPX6	P1PS040DS7G0050	DVWE30SMOMDCF	WSA-C8-FM0
25KAIW13BPX8	P1PS040DS7G0075	DVWE30SRCF	WSV06L71
25KAIW13BVX0	P1PS040DS7G0075	DVWE30SROMDCF	WSV06L71X
25KAIW13BVX3	P1PS040DS7G0125	DVWE30ZSRCF	WSV06LCF
25KAIW13BVX6	P1PS040DS7G0125	DVWE35LMCF	WSV06LCFX
25KAIW13BVX8	P1PS040DS8G0025	DVWE35LRCF	WSV06LMS

25KAIW13EEX	P1PS040DS8G0025	DVWE35LROMDCF	WSV06LMSX
25KAIW13EEXS	P1PS050DS7G0005	DVWE35ZLRCF	WSV06LOMD71
25KAIW13EVX	P1PS050DS7G0005	DVWE38SRCF	WSV06LOMDCF
25KAIW13MPN	P1PS050DS7G0010	DVWE38SROMDCF	WSV06LOMDCFV
25KAIW13MPNS_06	P1PS050DS7G0010	DVWE38SRVITOMDCF	WSV06S71
25KAIW13MPNS_10	P1PS050DS7G0025	DVWE42LROMDCF	WSV06SCF
25KAIW13MPX	P1PS050DS7G0025	DWEE527P15ELAF	WSV06SMS
25KAIW13MVN	P1PS050DS7G0030	DWEE527P20ELAF	WSV06SOMD71
25KAIW13REX	P1PS050DS7G0030	DWEE527P40GLAF	WSV06SOMDCF
25KAIW13RVX	P1PS050DS7G0050	DWEE527P40KLAF	WSV06ZL71
25KAIW13RVXS	P1PS050DS7G0050	DWKC522P20K	WSV06ZLCF
25KAIW13SPN	P1PS050DS7G0080	DWKC5261P20B	WSV06ZLSSACF
25KAIW17BPN	P1PS050DS7G0080	DWKC5261P20E	WSV06ZSCF
25KAIW17BPN0	P1PS050DS7G0100	DWLC522P15E	WSV08L71
25KAIW17BPN3	P1PS050DS7G0100	DWLC522P20E	WSV08LCF
25KAIW17BPN6	P1PS050DS7G0200	DWLC5261P40E	WSV08LCFX
25KAIW17BPN8	P1PS050DS7G0200	DWUE527P20KLAF	WSV08LMS
25KAIW17BPNS_01	P1PS063DS7G0010	DX01-406-60	WSV08LMSX
25KAIW17BPX0	P1PS063DS7G0010	DX01-406-60	WSV08LOMD71
25KAIW17BPX3	P1PS063DS7G0015	DX01-416-60	WSV08LOMDCF
25KAIW17BPX6	P1PS063DS7G0015	DX01-416-60	WSV08LOMDCFV
25KAIW17BPX8	P1PS063DS7G0020	DX01-421-60	WSV08S71
25KAIW17BPXS	P1PS063DS7G0020	DX01-421-60	WSV08SCF
25KAIW17BVN	P1PS063DS7G0025	DX01-451-60	WSV08SCFX
25KAIW17EEX	P1PS063DS7G0025	DX01-451-60	WSV08SOMD71
25KAIW17EEXS	P1PS063DS7G0030	DX01-604-951M	WSV08SOMDCF
25KAIW17EVX	P1PS063DS7G0030	DX01-604-951M	WSV08ZL71
25KAIW17MED	P1PS063DS7G0040	DX01-605-951J	WSV08ZLCF
25KAIW17MEN	P1PS063DS7G0040	DX01-605-951J	WSV08ZLNBR71
25KAIW17MPN	P1PS063DS7G0050	DX01-605-951M	WSV08ZLSSACF
25KAIW17MPNS_06	P1PS063DS7G0050	DX01-605-951M	WSV08ZLVITCF
25KAIW17MPXS	P1PS063DS7G0080	DX01-606-60	WSV08ZSCF
25KAIW17MVN	P1PS063DS7G0080	DX01-606-60	WSV10L71
25KAIW17MVNS_01	P1PS063DS8G0050	DX01-606-951J	WSV10L71X
25KAIW17REX	P1PS063DS8G0050	DX01-606-951J	WSV10LCF
25KAIW17RVX	P1PS080DS7G0010	DX01-606-951M	WSV10LCFX
25KAIW17SPN	P1PS080DS7G0010	DX01-606-951M	WSV10LDPR71CF
25KAIW17SPNS	P1PS080DS7G0040	DX01-606-951MC	WSV10LMS
25KAIW21BPN	P1PS080DS7G0040	DX01-606-951MC	WSV10LMSX
25KAIW21BPN0	P1PS080DS8G0030	DX01-606-953M	WSV10LOMD71
25KAIW21BPN3	P1PS080DS8G0030	DX01-606-953M	WSV10LOMDCF
25KAIW21BPN6	P1PS080DS8G0050	DX01-608-951J	WSV10LOMDCFV
25KAIW21BPN8	P1PS080DS8G0050	DX01-608-951J	WSV10LSPH71
25KAIW21BPNS	P1PS100DS7G0015	DX01-611-60	WSV10S71
25KAIW21BPX0	P1PS100DS7G0015	DX01-611-60	WSV10SCF
25KAIW21BPX3	P1PS100DS7G0100	DX01-611-951M	WSV10SOMD71
25KAIW21BPX6	P1PS100DS7G0100	DX01-611-951M	WSV10SOMDCF
25KAIW21BPX8	P1PS100DS7G0200	DX01-616-60	WSV10ZL71
25KAIW21BVN	P1PS100DS7G0200	DX01-616-60	WSV10ZLCF
25KAIW21BVX6	P1QS032DC7B0020	DX01-616-951M	WSV10ZLVITCF
25KAIW21EVX	P1QS032DC7B0020	DX01-616-951M	WSV10ZS71
25KAIW21MPN	P1QS032DC7G0020	DX01-620-951M	WSV10ZSCF
25KAIW21MPNS_06	P1QS032DC7G0020	DX01-620-951M	WSV12L71

25KAIW21MPNS_11	P1QS050DC7B0025	DX01-621-60	WSV12L71X
25KAIW21MPX	P1QS050DC7B0025	DX01-621-60	WSV12LCF
25KAIW21MVN	P1QS080DC7G0050	DX01-621-951A	WSV12LCFX
25KAIW21REX	P1QS080DC7G0050	DX01-621-951A	WSV12LDPR71CF
25KAIW21RVX	P1R-4FMX	DX01-621-951J	WSV12LMS
25KAKK08MPN	P1R-4FMX	DX01-621-951J	WSV12LMSX
25KAKK10MPN	P1R-4JMX	DX01-621-951M	WSV12LOMD71
25KAKK12MPN	P1R-4JMX	DX01-621-951M	WSV12LOMDCF
25KAKO08BPN0	P1R-4LMF	DX01-621-953A	WSV12LOMDCFV
25KAKO08BPN6	P1R-4LMF	DX01-621-953A	WSV12S71
25KAKO08BPN8	P1R-4MPF	DX01-621-953MC	WSV12S71X
25KAKO08BPX0	P1R-4MPF	DX01-621-953MC	WSV12SCF
25KAKO08BPX3	P1R-4NMF	DX01-623-60	WSV12SCFX
25KAKO08BPX6	P1R-4NMF	DX01-623-60	WSV12SOMD71
25KAKO08BPX8	P1S-2XJH	DX01-625-951M	WSV12SOMDCF
25KAKO08EVX	P1S-2XJH	DX01-625-951M	WSV12ZL71
25KAKO08MPC	P1S-4CMB	DX01-627-951M	WSV12ZLCF
25KAKO08MPN	P1S-4CMB	DX01-627-951M	WSV12ZS71
25KAKO08MPNS_03	P1S-4CMF	DX01-651-60	WSV12ZSCF
25KAKO08RVX	P1S-4CMF	DX01-651-60	WSV14S71
25KAKO10BPN0	P1S-4CMT	DX01-651-951M	WSV14SCF
25KAKO10BPN6	P1S-4CMT	DX01-651-951M	WSV14SOMDCF
25KAKO10BPN8	P1S-4CRD	DX01-656-951M	WSV14ZSCF
25KAKO10BPX0	P1S-4CRD	DX01-656-951M	WSV15L71
25KAKO10BPX3	P1S-4CRT	DX01BLK	WSV15L71X
25KAKO10BPX6	P1S-4CRT	DX01BLK	WSV15LCF
25KAKO10BPX8	P1S-4DMB	DX02-406-60	WSV15LCFVOLX
25KAKO10MPN	P1S-4DMB	DX02-406-60	WSV15LCFX
25KAKO10MPNS_03	P1S-4DMF	DX02-411-60	WSV15LDPR71CF
25KAKO10RVX	P1S-4DMF	DX02-411-60	WSV15LMS
25KAKO12BPN6	P1S-4DMT	DX02-416-60	WSV15LOMD71
25KAKO12BPN8	P1S-4DMT	DX02-416-60	WSV15LOMDCF
25KAKO12BPX0	P1S-4DRD	DX02-421-60	WSV15LOMDCFV
25KAKO12BPX3	P1S-4DRD	DX02-421-60	WSV15LOMDMS
25KAKO12BPX6	P1S-4DRT	DX02-451-60	WSV15ZL71
25KAKO12BPX8	P1S-4DRT	DX02-451-60	WSV15ZLCF
25KAKO12EVX	P1S-4HMB	DX02-604-60	WSV16S71
25KAKO12MPN	P1S-4HMB	DX02-604-60	WSV16S71X
25KAKO12RVX	P1S-4HMF	DX02-604-951M	WSV16SCF
25KAKU10SPN	P1S-4HMF	DX02-604-951M	WSV16SCFX
25KAKU12SPN	P1S-4HMT	DX02-606-60	WSV16SOMD71
25KATF06BPN	P1S-4HMT	DX02-606-60	WSV16SOMDCF
25KATF06BPN0	P1S-4HRD	DX02-606-951M	WSV16ZS71
25KATF06BPN3	P1S-4HRD	DX02-606-951M	WSV16ZSCF
25KATF06BPN6	P1S-4HRT	DX02-611-60	WSV18L71
25KATF06BPN8	P1S-4HRT	DX02-611-60	WSV18L71X
25KATF06BPX0	P1S-4JRD	DX02-611-951M	WSV18LCF
25KATF06BPX3	P1S-4JRD	DX02-611-951M	WSV18LCFX
25KATF06BPX6	P1S-4JRT	DX02-612-951M	WSV18LDPR71CF
25KATF06BPX8	P1S-4JRT	DX02-612-951M	WSV18LMS
25KATF06EVX	P1S-4KME	DX02-616-951M	WSV18LOMD71
25KATF06MPN	P1S-4KME	DX02-616-951M	WSV18LOMDCF
25KATF06MPNS_05	P1S-4LME	DX02-616-955MS3	WSV18LOMDCFV

25KATF06MPX	P1S-4LME	DX02-616-955MS3	WSV18ZL71
25KATF06RVX	P1S-4LRD	DX02-620-60	WSV18ZLCF
25KATF06RVXS	P1S-4LRD	DX02-620-60	WSV20S71
25KATF06SPN	P1S-4LRT	DX02-620-951M	WSV20SCF
25KATF08BPX	P1S-4LRT	DX02-620-951M	WSV20SCFX
25KATF08EVX	P1S-4MME	DX02-621-60	WSV20SOMD71
25KATF08MPN	P1S-4MME	DX02-621-60	WSV20SOMDCF
25KATF08MPNS_04	P1S-4MRD	DX02-621-951M	WSV20ZS71
25KATF08MPX	P1S-4MRD	DX02-621-951M	WSV20ZSCF
25KATF08MVN	P1S-4MRT	DX02-621-953M	WSV22L71
25KATF08RVX	P1S-4MRT	DX02-621-953M	WSV22L71X
25KATF08SPN	P1S-4NME	DX02-621-955MS3	WSV22LCF
25KATF09BEN0	P1S-4NME	DX02-621-955MS3	WSV22LCFVOLX
25KATF09BEN6	P1S-4PME	DX02-622-951M	WSV22LCFX
25KATF09BEX	P1S-4PME	DX02-622-951M	WSV22LDPR71CF
25KATF09BPN	P1S-4PML	DX02-625-60	WSV22LMS
25KATF09BPN0	P1S-4PML	DX02-625-60	WSV22LOMD71
25KATF09BPN3	P1S-4PMW	DX02-625-951M	WSV22LOMDCF
25KATF09BPN6	P1S-4PMW	DX02-625-951M	WSV22LOMDCFV
25KATF09BPN8	P1S-4PRD	DX02-627-60	WSV22ZL71
25KATF09BPX0	P1S-4PRD	DX02-627-60	WSV22ZLCF
25KATF09BPX3	P1S-4PRT	DX02-627-951M	WSV22ZLSSACF
25KATF09BPX6	P1S-4PRT	DX02-627-951M	WSV25S71
25KATF09BPX8	P1S-4QMB	DX02-651-951M	WSV25SCF
25KATF09EEX	P1S-4QMB	DX02-651-951M	WSV25SCFX
25KATF09EVX	P1S-4QME	DX02BLK	WSV25SOMD71
25KATF09MEN	P1S-4QME	DX02BLK	WSV25SOMDCF
25KATF09MPN	P1S-4QML	DX1-406-60	WSV25SSTOSSCF
25KATF09MPNS_03	P1S-4QML	DX1-406-60	WSV25ZS71
25KATF09MPX	P1S-4QMW	DX1-406-70	WSV25ZSCF
25KATF09MVN	P1S-4QMW	DX1-406-70	WSV28L71
25KATF09RVX	P1S-4RMB	DX1-406-EX	WSV28LCF
25KATF09RVXS	P1S-4RMB	DX1-406-EX	WSV28LCFX
25KATF09SPN	P1S-4RME	DX1-411/3000879	WSV28LMS
25KATF09SPNS_01	P1S-4RME	DX1-411/3000879	WSV28LOMD71
25KATF10BPX0	P1S-4RRD	DX1-411-60	WSV28LOMDCF
25KATF10BPX8	P1S-4RRD	DX1-411-60	WSV28ZL71
25KATF10BVN	P1S-4RRT	DX1-411-70	WSV28ZLCF
25KATF10EVX	P1S-4RRT	DX1-411-70	WSV28ZLSSACF
25KATF10MEN	P1S-6063/S90029	DX1-411-EX	WSV28ZLVITCF
25KATF10MPN	P1S-6063/S90029	DX1-411-EX	WSV30S71
25KATF10MPNS_04	P1S-6063/S90112	DX1-413/3000881	WSV30SCF
25KATF10MPNS_08	P1S-6063/S90112	DX1-413/3000881	WSV30SCFX
25KATF10MPX	P1S-8040BB-0100	DX1-413-60	WSV30SOMD71
25KATF10MVN	P1S-8040BB-0100	DX1-413-60	WSV30SOMDCF
25KATF10RVX	P1S-8040BB-0400	DX1-413-70	WSV30ZS71
25KATF10SPN	P1S-8040BB-0400	DX1-413-70	WSV30ZSCF
25KATF13BPN	P1S-8040DG-0020	DX1-416/3000901	WSV35L71
25KATF13BPN0	P1S-8040DG-0020	DX1-416/3000901	WSV35LCF
25KATF13BPN3	P1S-8040DG-0030	DX1-416-60	WSV35LCFX
25KATF13BPN6	P1S-8040DG-0030	DX1-416-60	WSV35LDPR71CF
25KATF13BPN8	P1S-8040DG-0040	DX1-416-70	WSV35LOMD71
25KATF13BPX	P1S-8040DG-0040	DX1-416-70	WSV35LOMDCF

25KATF13BPX0	P1S-8040DG-0100	DX1-416-EX	WSV35LSTOSSCF
25KATF13BPX3	P1S-8040DG-0100	DX1-416-EX	WSV35ZL71
25KATF13BPX6	P1S-8040DG-0320	DX1-421-60	WSV35ZLCF
25KATF13BPX8	P1S-8040DG-0320	DX1-421-60	WSV38S71
25KATF13BVN	P1S-8040DG-0400	DX1-421-70	WSV38SCF
25KATF13EVX	P1S-8040DG-0400	DX1-421-70	WSV38SOMD71
25KATF13MPN	P1S-8040DG-0470	DX1-421-EX	WSV38SOMDCF
25KATF13MPNS_05	P1S-8040DG-0470	DX1-421-EX	WSV38ZSCF
25KATF13MPX	P1S-8040DG-0530	DX1-451/3000877	WSV42L71
25KATF13MVN	P1S-8040DG-0530	DX1-451/3000877	WSV42LCF
25KATF13RVX	P1S-8040DG-1200	DX1-451-60	WSV42LCFX
25KATF13RVXS	P1S-8040DG-1200	DX1-451-60	WSV42LDPR71CF
25KATF13SPN	P1S-8050DG-0080	DX1-451-70	WSV42LOMD71
25KATF13SPNS_01	P1S-8050DG-0080	DX1-451-70	WSV42LOMDCF
25KATP06MPN	P1S-8050DG-0100	DX1-451-EX	WSV42ZL71
25KATP10MPN	P1S-8050DG-0100	DX1-451-EX	WSV42ZLCF
25KATP10MPX	P1S-8050DG-0125	DX1-456-70	WT05/03
25KATP13MPN	P1S-8050DG-0125	DX1-456-70	WT05/04
25KATP13MPX	P1S-8050DG-0150	DX1-606-70	WV05/04
25KATS06MPN	P1S-8050DG-0150	DX1-606-70	WV05/05
25KATS06RVX	P1S-8050DG-0230	DX1-606-711M	WV05/05N
25KATS08BPC	P1S-8050DG-0230	DX1-606-711M	WV05/06
25KATS08MPN	P1S-8050DG-0350	DX1-606-713	WV05/06N
25KATS08RVX	P1S-8050DG-0350	DX1-606-713	WV08LCF
25KATS10MPN	P1S-8050DG-0600	DX1-606-761M	WV08LOMDCF
25KATS10MVN	P1S-8050DG-0600	DX1-606-761M	WV08ZLCF
25KATS10RVX	P1S-8050DG-0640	DX1-606-761MC	WV10/06
25KBAD14BPN	P1S-8050DG-0640	DX1-606-761MC	WV10/08
25KBAD14BPX	P1S-8050DG-0900	DX1-606-7B	WV10LCF
25KBAD14BVN	P1S-8050DG-0900	DX1-606-7B	WV10LITLSTAHL71
25KBAD14MPN	P1S-8063BB-0560	DX1-606-961MA	WV10LOMDCF
25KBAD14MVN	P1S-8063BB-0560	DX1-606-961MA	WV10ZLCF
25KBAD16BPN	P1S-8063BB-0900	DX1-606-961MB	WV12L71
25KBAD16BPX	P1S-8063BB-0900	DX1-606-961MB	WV12LCF
25KBAD16MPN	P1S-8063DG-0025	DX1-606-AN	WV12LOMD71
25KBAD18BPN	P1S-8063DG-0025	DX1-606-AN	WV12LOMDCF
25KBAD18BPN0	P1S-8063DG-0080	DX1-606-B219	WV12ZLCF
25KBAD18BPN3	P1S-8063DG-0080	DX1-606-B219	WV13/06
25KBAD18BPN8	P1S-8063DG-0100	DX1-606-B619	WV13/08
25KBAD18BPX	P1S-8063DG-0100	DX1-606-B619	WV13/10
25KBAD18MPN	P1S-8063DG-0125	DX1-606-BL49	WV15LCF
25KBAK13BPN	P1S-8063DG-0125	DX1-606-BL49	WV15LOMDCF
25KBAK13BPX	P1S-8063DG-0150	DX1-606-BL53	WV15ZLCF
25KBAK13BVN	P1S-8063DG-0150	DX1-606-BL53	WV16SCF
25KBAK13MEX	P1S-8063DG-0200	DX1-606-BL57	WV17/08A
25KBAK13MPN	P1S-8063DG-0200	DX1-606-BL57	WV17/10A
25KBAK17BEN	P1S-8063DG-0250	DX1-606-BN	WV17/12A
25KBAK17BPN	P1S-8063DG-0250	DX1-606-BN	WVC1
25KBAK17BPX	P1S-8063DG-0300	DX1-606-CL49	WZK1KOMPLX
25KBAK17BPXS	P1S-8063DG-0300	DX1-606-CL49	WZK1LEERX
25KBAK17BVN	P1S-8063DG-0700	DX1-606-EX	WZK2KOMPLX
25KBAK17BVX	P1S-8063DG-0700	DX1-606-EX	WZK2LEERX
25KBAK17MPN	P1S-8063DG-1000	DX1-611/3000884	X01-C4-000

25KBAK17MVN	P1S-8063DG-1000	DX1-611/3000884	X01-C4-000
25KBAK17MVNS_01	P1S-8063DK-0850	DX1-611-661M	X01-C4-M00
25KBAK21BEN	P1S-8063DK-0850	DX1-611-661M	X01-C4-M00
25KBAK21BPN	P1S-8080DG-0120	DX1-611-70	X02-C4-F00
25KBAK21BPX	P1S-8080DG-0120	DX1-611-70	X02-C4-F00
25KBAK21BVN	P1S-8080DG-0500	DX1-611-761M	X03-02-000
25KBAK21MPN	P1S-8080DG-0500	DX1-611-761M	X03-02-000
25KBAK21MPNS	P1S-8080DG-0750	DX1-611-961MA	X03-C2-000
25KBAM14EVX	P1S-8080DG-0750	DX1-611-961MA	X03-C2-000
25KBAM14RVX	P1S-8080DK-0150	DX1-611-961MB	X03-C2-E00
25KBAM16EVX	P1S-8080DK-0150	DX1-611-961MB	X03-C2-E00
25KBAM16RVX	P1S-8080KG-0400	DX1-611-B219	X03-C2-M00
25KBAM18RVX	P1S-8080KG-0400	DX1-611-B219	X03-C2-M00
25KBAN13BPN	P1S-8080KG-1100	DX1-611-B619	X03-C2-MU0
25KBAN13MVN	P1S-8080KG-1100	DX1-611-B619	X03-C2-MU0
25KBAN17BPN	P1S-8100KG-0850	DX1-611-BL49	X03-C2-Q03
25KBAN17MPX	P1S-8100KG-0850	DX1-611-BL49	X03-C2-Q03
25KBAN21MPX	P1S-8125DG-0125	DX1-611-BN	X03-C2-U00
25KBAW13BPN6	P1S-8125DG-0125	DX1-611-BN	X03-C2-U00
25KBAW13BPN8	P1S-8125DG-0250	DX1-611-EX	X03-C4-000
25KBAW13BPX6	P1S-8125DG-0250	DX1-611-EX	X03-C4-000
25KBAW13BPX8	P1S-8125DG-0300	DX1-613-70	X03-C4-M00
25KBAW13BVN	P1S-8125DG-0300	DX1-613-70	X03-C4-M00
25KBAW13EEX	P1S-8125DG-0384	DX1-613-B219	X04-C2-000
25KBAW13EVX	P1S-8125DG-0384	DX1-613-B219	X04-C2-000
25KBAW13MPN	P1S-C032/S50418	DX1-613-B619	X04-C2-U00
25KBAW13MPNS_01	P1S-C032/S50418	DX1-613-B619	X04-C2-U00
25KBAW13MPX	P1S-C032MS-0025	DX1-613-BL49	X04-C2-X00
25KBAW13MVN	P1S-C032MS-0025	DX1-613-BL49	X04-C2-X00
25KBAW13REXS	P1S-C032MS-0250	DX1-613-BN	X06-02-Q09
25KBAW13RKX	P1S-C032MS-0250	DX1-613-BN	X06-02-Q09
25KBAW13RVX	P1S-C032MS-0280	DX1-613-EX	X06-C2-000
25KBAW17BPN	P1S-C032MS-0280	DX1-613-EX	X06-C2-000
25KBAW17BPX	P1S-C032MS-0400	DX1-616/3000888	X06-C2-Q09
25KBAW17BPX6	P1S-C032MS-0400	DX1-616/3000888	X06-C2-Q09
25KBAW17BPX8	P1S-C040/S50282	DX1-616-70	X06-C2-U00
25KBAW17BVN0	P1S-C040/S50282	DX1-616-70	X06-C2-U00
25KBAW17BVN6	P1S-C040MS-0025	DX1-616-761M	X08-C2-000
25KBAW17BVP	P1S-C040MS-0025	DX1-616-761M	X08-C2-000
25KBAW17EEX	P1S-C040MS-0050	DX1-616-771M	X25-C4-000
25KBAW17EKX0S	P1S-C040MS-0050	DX1-616-771M	X25-C4-000
25KBAW17EVX	P1S-C040MS-0060	DX1-616-7B	X25-C4-U00
25KBAW17MPN	P1S-C040MS-0060	DX1-616-7B	X25-C4-U00
25KBAW17MPNS_01	P1S-C040MS-0080	DX1-616-B619	X300-EM1/638
25KBAW17MVN	P1S-C040MS-0080	DX1-616-B619	X300-HF2/638
25KBAW17REX	P1S-C040MS-0160	DX1-616-BL49	X300-HM1
25KBAW17RVX	P1S-C040MS-0160	DX1-616-BL49	X300-RD2/638
25KBAW21BPN0	P1S-C040MS-0280	DX1-616-BN	X300-RG1/638
25KBAW21BPN6	P1S-C040MS-0280	DX1-616-BN	X300-RM1/638
25KBAW21BPN8	P1S-C050MS-0100	DX1-616-CL49	X300-SC2
25KBAW21BPX0	P1S-C050MS-0100	DX1-616-CL49	X300-SC2/638
25KBAW21BPX8	P1S-C050MS-0200	DX1-616-EX	X51-02-000
25KBAW21EEX	P1S-C050MS-0200	DX1-616-EX	X51-02-000

25KBAW21EVX	P1S-C050MS-0225	DX1-621-70	XARG-12
25KBAW21EVXS	P1S-C050MS-0225	DX1-621-70	XARG-16
25KBAW21MPN	P1S-C050MS-0335	DX1-621-711MS	XARG-20
25KBAW21MPNS_01	P1S-C050MS-0335	DX1-621-711MS	XARG-24
25KBAW21MVN	P1S-C063MS-0900	DX1-621-713	XARG-32
25KBAW21RVX	P1S-C063MS-0900	DX1-621-713	XGSPG1
25KBIM14BPN	P1S-C063MS-0950	DX1-621-713M	XGSPG1
25KBIM14BPX	P1S-C063MS-0950	DX1-621-713M	XGSPG2
25KBIM14RVX	P1S-C080MS-0160	DX1-621-761M	XGSPG2
25KBIM16BPN	P1S-C080MS-0160	DX1-621-761M	XL25
25KBIM16BPX	P1S-D032/S50012	DX1-621-771M	XL25CAN
25KBIM16RVX	P1S-D032/S50012	DX1-621-771M	XL25I
25KBIM18BPN	P1S-D032MF-0025	DX1-621-7B	XL50
25KBIM18BPX	P1S-D032MF-0025	DX1-621-7B	XL50I
25KBIM18MPN	P1S-D032MF-0050	DX1-621-7B1MC	XL80
25KBIM18RVX	P1S-D032MF-0050	DX1-621-7B1MC	XL80CAN
25KBIN13MPX	P1S-D032MF-0460	DX1-621-961MA	XL80I
25KBIN17BPX	P1S-D032MF-0460	DX1-621-961MA	XL-CONNECT
25KBIN17MPN	P1S-D032MF-0560	DX1-621-961MB	XL-DUMP
25KBIW13BEN	P1S-D032MF-0560	DX1-621-961MB	XLPSU
25KBIW13BEN6	P1S-D032MS-0008	DX1-621-B219	XMC-04-000
25KBIW13BEN8	P1S-D032MS-0008	DX1-621-B219	XMC-04-000
25KBIW13BPC	P1S-D032MS-0010	DX1-621-B619	XMC-08-000
25KBIW13BPN	P1S-D032MS-0010	DX1-621-B619	XMC-08-000
25KBIW13BPN0	P1S-D032MS-0020	DX1-621-BL49	XMC-C4-000
25KBIW13BPN3	P1S-D032MS-0020	DX1-621-BL49	XMC-C4-000
25KBIW13BPN6	P1S-D032MS-0025	DX1-621-BL53	XMC-C8-000
25KBIW13BPN8	P1S-D032MS-0025	DX1-621-BL53	XMC-C8-000
25KBIW13BPX	P1S-D032MS-0030	DX1-621-BL57	XMC-CB-000
25KBIW13BPX0	P1S-D032MS-0030	DX1-621-BL57	XMC-CB-000
25KBIW13BPX3	P1S-D032MS-0040	DX1-621-BN	XPR206VT-2P3
25KBIW13BPX6	P1S-D032MS-0040	DX1-621-BN	XPRO704B
25KBIW13BPX8	P1S-D032MS-0050	DX1-621-CL49	XPRO902
25KBIW13BVN	P1S-D032MS-0050	DX1-621-CL49	XPRO904D
25KBIW13BVN6	P1S-D032MS-0060	DX1-621-EX	XR101F30-250
25KBIW13BVN6S	P1S-D032MS-0060	DX1-621-EX	XR101S30
25KBIW13BVN8	P1S-D032MS-0070	DX1-622-961MB	XRP-95-263
25KBIW13BVNS_01	P1S-D032MS-0070	DX1-622-961MB	XRP-95-263
25KBIW13EEX	P1S-D032MS-0080	DX1-651/3000882	XRP-95-746
25KBIW13EVX	P1S-D032MS-0080	DX1-651/3000882	XRP-95-746
25KBIW13MEN	P1S-D032MS-0100	DX1-651-70	XRP-96-244
25KBIW13MPD	P1S-D032MS-0100	DX1-651-70	XRP-96-244
25KBIW13MPN	P1S-D032MS-0125	DX1-651-B219	XW19
25KBIW13MPNS	P1S-D032MS-0125	DX1-651-B219	XZCA-XXN
25KBIW13MPNS_03	P1S-D032MS-0130	DX1-651-B619	Y26969060
25KBIW13MPX	P1S-D032MS-0130	DX1-651-B619	Y-34730
25KBIW13MVN	P1S-D032MS-0150	DX1-651-BL49	Y-34731
25KBIW13MVNS_01	P1S-D032MS-0150	DX1-651-BL49	Y-34732
25KBIW13REX	P1S-D032MS-0160	DX1-651-BN	Y-34733
25KBIW13RVX	P1S-D032MS-0160	DX1-651-BN	Y-34734
25KBIW17BEN	P1S-D032MS-0180	DX1-651-EX	Y-34735
25KBIW17BEX	P1S-D032MS-0180	DX1-651-EX	Y-34736
25KBIW17BPN	P1S-D032MS-0200	DX1-656-EX	Y-34737

25KBIW17BPN3	P1S-D032MS-0200	DX1-656-EX	Y-34738
25KBIW17BPX	P1S-D032MS-0240	DX1-658-771M	Y-34739
25KBIW17BPX0	P1S-D032MS-0240	DX1-658-771M	Y-34740
25KBIW17BPX3	P1S-D032MS-0250	DX1-661-961MB	Y-34741
25KBIW17BPX6	P1S-D032MS-0250	DX1-661-961MB	Y-34743
25KBIW17BPX8	P1S-D032MS-0280	DX1-663-963MB	Y6TF-9-8
25KBIW17BPXS	P1S-D032MS-0280	DX1-663-963MB	YA10
25KBIW17BVN	P1S-D032MS-0300	DX1-664-963MB	YA13
25KBIW17EEXS_01	P1S-D032MS-0300	DX1-664-963MB	YA13N
25KBIW17EVX	P1S-D032MS-0350	DX1-R06-60	YA17
25KBIW17MPN	P1S-D032MS-0350	DX1-R06-60	YA21
25KBIW17MPNS_03	P1S-D032MS-0400	DX1-R11-AN	YA21N
25KBIW17MPX	P1S-D032MS-0400	DX1-R11-AN	YAY6-10-9C
25KBIW17MVN	P1S-D032MS-0450	DX1-R21-60	YAY6-6-6C
25KBIW17MVNS_01	P1S-D032MS-0450	DX1-R21-60	YAYA-6-6C
25KBIW17RVX	P1S-D032MS-0500	DX1-R21-AN	YAYA-8-8C
25KBIW21BEN	P1S-D032MS-0500	DX1-R21-AN	YFCGXHNAA/S
25KBIW21BEX	P1S-D032MS-0750	DX2-406-60	YI10
25KBIW21BPN	P1S-D032MS-0750	DX2-406-60	YI10N
25KBIW21BPN3	P1S-D040MS-0020	DX2-406-70	YI13
25KBIW21BPN6	P1S-D040MS-0020	DX2-406-70	YI13N
25KBIW21BPN8	P1S-D040MS-0025	DX2-406-EX	YI17
25KBIW21BPX	P1S-D040MS-0025	DX2-406-EX	YI17N
25KBIW21BPX6	P1S-D040MS-0030	DX2-411-60	YI21
25KBIW21BPX8	P1S-D040MS-0030	DX2-411-60	YI21N
25KBIW21BVP	P1S-D040MS-0040	DX2-411-70	YJ2PK4
25KBIW21EEX	P1S-D040MS-0040	DX2-411-70	YJ2PK6
25KBIW21EVX	P1S-D040MS-0050	DX2-411-EX	YJ2PK8
25KBIW21MPN	P1S-D040MS-0050	DX2-411-EX	YJ2PMK4
25KBIW21MPNS	P1S-D040MS-0060	DX2-413-60	YJ52PK6-4
25KBIW21MPNS_03	P1S-D040MS-0060	DX2-413-60	YJ5PK4
25KBIW21MPX	P1S-D040MS-0070	DX2-413-70	YJ5PK6-4
25KBIW21MVN	P1S-D040MS-0070	DX2-413-70	YJ63PK10-1/4
25KBIW21REX	P1S-D040MS-0080	DX2-416-60	YJ63PK6-1/8
25KBIW21RVX	P1S-D040MS-0080	DX2-416-60	YJ63PK8-1/4
25KBKK08BPN	P1S-D040MS-0100	DX2-416-70	YJ64PK4-1/4
25KBKK08BPX	P1S-D040MS-0100	DX2-416-70	YJ64PK4-1/8
25KBKK08RVX	P1S-D040MS-0125	DX2-416-EX	YJ64PK6-1/4
25KBKK12BPN	P1S-D040MS-0125	DX2-416-EX	YJ64PK6-1/8
25KBKK12BPX	P1S-D040MS-0130	DX2-421-60	YJ64PK8-1/4
25KBKO08BPX	P1S-D040MS-0130	DX2-421-60	YJ64PK8-1/8
25KBKO08EVX	P1S-D040MS-0150	DX2-421-70	YJPK10
25KBKO08RVX	P1S-D040MS-0150	DX2-421-70	YJPK4
25KBKO10BPN	P1S-D040MS-0160	DX2-421-EX	YJPK4-4-6
25KBKO10BPX	P1S-D040MS-0160	DX2-421-EX	YJPK6
25KBKO10RVX	P1S-D040MS-0180	DX2-451-60	YJPK6-6-8
25KBKO12BPN	P1S-D040MS-0180	DX2-451-60	YJPK8
25KBKO12BPX	P1S-D040MS-0250	DX2-451-70	YJPK8-8-10
25KBKO12EVX	P1S-D040MS-0250	DX2-451-70	YJPMK4
25KBKO12RVX	P1S-D040MS-0350	DX2-451-EX	YJPMK6
25KBTF06BEN6	P1S-D040MS-0350	DX2-451-EX	YM82527
25KBTF06BEN8	P1S-D040MS-0400	DX2-456-70	YMNX-5-04S
25KBTF06BPN	P1S-D040MS-0400	DX2-456-70	YTTF-10-8

25KBTF06BPX	P1S-D040MS-0500	DX2-606-70	YTTF-6-8
25KBTF06EVX	P1S-D040MS-0500	DX2-606-70	YTTF-9-8
25KBTF06MPN	P1S-D040MS-0530	DX2-606-761M	YTTF-9-9
25KBTF06MPNS_01	P1S-D040MS-0530	DX2-606-761M	Z1DWA01KNJDJI4N5XG147
25KBTF06MPX	P1S-D040MS-0600	DX2-606-7B	Z1DWA01KNJWTI4N
25KBTF06RVX	P1S-D040MS-0600	DX2-606-7B	Z1DWB37BNJWI5N
25KBTF08BPN	P1S-D040MS-0668	DX2-606-B619	Z1DWB37BNJWI5NXG278
25KBTF08BPX	P1S-D040MS-0668	DX2-606-B619	Z3C1-2.5-10
25KBTF08BPX6	P1S-D040MS-0680	DX2-606-BL49	Z3C1-2.5-10
25KBTF08BVN	P1S-D040MS-0680	DX2-606-BL49	ZB2-BE101
25KBTF08EEX	P1S-D040MS-0800	DX2-606-BN	ZB2-BE101
25KBTF08EVX	P1S-D040MS-0800	DX2-606-BN	ZB4-BA2
25KBTF08MPN	P1S-D040MS-1000	DX2-606-EX	ZB4-BA2
25KBTF08MPNS_01	P1S-D040MS-1000	DX2-606-EX	ZB4-BA3
25KBTF08MVN	P1S-D040MS-1200	DX2-611-70	ZB4-BA3
25KBTF08MVX	P1S-D040MS-1200	DX2-611-70	ZB4-BA4
25KBTF08RVX	P1S-D040MS-1300	DX2-611-761M	ZB4-BA4
25KBTF09BEN	P1S-D040MS-1300	DX2-611-761M	ZB4-BA5
25KBTF09BPN	P1S-D050MF-0050	DX2-611-BL49	ZB4-BA5
25KBTF09BPN6	P1S-D050MF-0050	DX2-611-BL49	ZB4-BA7341
25KBTF09BPN8	P1S-D050MQ-0425	DX2-611-BN	ZB4-BA7341
25KBTF09BPX	P1S-D050MQ-0425	DX2-611-BN	ZB4-BA9
25KBTF09BVN	P1S-D050MQ-0500	DX2-611-EX	ZB4-BA9
25KBTF09EVX	P1S-D050MQ-0500	DX2-611-EX	ZB4-BC2
25KBTF09MPN	P1S-D050MS-0025	DX2-613-70	ZB4-BC2
25KBTF09RVX	P1S-D050MS-0025	DX2-613-70	ZB4-BC2S15
25KBTF10BPN	P1S-D050MS-0030	DX2-613-761M	ZB4-BC2S15
25KBTF10BPX	P1S-D050MS-0030	DX2-613-761M	ZB4-BC3
25KBTF10BPXS	P1S-D050MS-0050	DX2-613-BL49	ZB4-BC3
25KBTF10EVX	P1S-D050MS-0050	DX2-613-BL49	ZB4-BC4
25KBTF10MPN	P1S-D050MS-0060	DX2-613-BN	ZB4-BC4
25KBTF10MPNS_01	P1S-D050MS-0060	DX2-613-BN	ZB4-BC5
25KBTF10MPX	P1S-D050MS-0075	DX2-613-EX	ZB4-BC5
25KBTF10MVN	P1S-D050MS-0075	DX2-613-EX	ZB4-BD2
25KBTF10RVX	P1S-D050MS-0080	DX2-616-70	ZB4-BD2
25KBTF13BEN	P1S-D050MS-0080	DX2-616-70	ZB4-BD3
25KBTF13BEN6	P1S-D050MS-0100	DX2-616-711M	ZB4-BD3
25KBTF13BPN	P1S-D050MS-0100	DX2-616-711M	ZB4-BD5
25KBTF13BPX	P1S-D050MS-0125	DX2-616-711MC	ZB4-BD5
25KBTF13BVN	P1S-D050MS-0125	DX2-616-711MC	ZB4-BG2
25KBTF13EVX	P1S-D050MS-0130	DX2-616-761M	ZB4-BG2
25KBTF13MPN	P1S-D050MS-0130	DX2-616-761M	ZB4-BG3
25KBTF13MPNS_02	P1S-D050MS-0140	DX2-616-7B	ZB4-BG3
25KBTF13MPX	P1S-D050MS-0140	DX2-616-7B	ZB4-BG4
25KBTF13RVX	P1S-D050MS-0160	DX2-616-B619	ZB4-BG4
25KBTP06BPN	P1S-D050MS-0160	DX2-616-B619	ZB4-BH02
25KBTP10BPN	P1S-D050MS-0185	DX2-616-BL49	ZB4-BH02
25KBTP10BPX	P1S-D050MS-0185	DX2-616-BL49	ZB4-BH03
25KBTP13BPN	P1S-D050MS-0200	DX2-616-BN	ZB4-BH03
25KBTP13BPX	P1S-D050MS-0200	DX2-616-BN	ZB4-BH04
25KBTS06BPN	P1S-D050MS-0250	DX2-616-EX	ZB4-BH04
25KBTS06BPX	P1S-D050MS-0250	DX2-616-EX	ZB4-BJ2
25KBTS08BPN	P1S-D050MS-0270	DX2-621-70	ZB4-BJ2

25KBTS08BPX	P1S-D050MS-0270	DX2-621-70	ZB4-BJ3
25KBTS08BVN	P1S-D050MS-0320	DX2-621-711M	ZB4-BJ3
25KBTS08MPN	P1S-D050MS-0320	DX2-621-711M	ZB4-BJ5
25KBTS08MPX	P1S-D050MS-0350	DX2-621-711MS	ZB4-BJ5
25KBTS08MVN	P1S-D050MS-0350	DX2-621-711MS	ZB4-BJ7
25KBTS08RVX	P1S-D050MS-0500	DX2-621-713	ZB4-BJ7
25KBTS10BPN	P1S-D050MS-0500	DX2-621-713	ZB4-BL2
25KBTS10BPX	P1S-D050MS-0600	DX2-621-761M	ZB4-BL2
25KBTS10RVX	P1S-D050MS-0600	DX2-621-761M	ZB4-BL3
25KDAK13BPN	P1S-D050MS-0640	DX2-621-7B	ZB4-BL3
25KDAK13BPNS_01	P1S-D050MS-0640	DX2-621-7B	ZB4-BL4
25KDAK17BPN	P1S-D050MS-0700	DX2-621-B219	ZB4-BL4
25KDAK17SPN	P1S-D050MS-0700	DX2-621-B219	ZB4-BP2
25KDAK21BPN	P1S-D050MS-0860	DX2-621-B619	ZB4-BP2
25KDAW17BPN	P1S-D050MS-0860	DX2-621-B619	ZB4-BP4
25KDIW13BEN	P1S-D050MS-0875	DX2-621-BL49	ZB4-BP4
25KDIW13BPN	P1S-D050MS-0875	DX2-621-BL49	ZB4-BR2
25KDIW13BPNS	P1S-D050MS-1050	DX2-621-BN	ZB4-BR2
25KDIW17BPN	P1S-D050MS-1050	DX2-621-BN	ZB4-BR4
25KDIW17BPNS	P1S-D063MS-0025	DX2-621-EX	ZB4-BR4
25KDIW21BPN	P1S-D063MS-0025	DX2-621-EX	ZB4-BS14
25KDTF06BPN	P1S-D063MS-0030	DX2-622-761M	ZB4-BS14
25KDTF06BPNS	P1S-D063MS-0030	DX2-622-761M	ZB4-BS54
25KDTF08BPN	P1S-D063MS-0045	DX2-651-70	ZB4-BS54
25KDTF09BPN	P1S-D063MS-0045	DX2-651-70	ZB4-BT4
25KDTF10BPN	P1S-D063MS-0050	DX2-651-761M	ZB4-BT4
25KDTF13BPN	P1S-D063MS-0050	DX2-651-761M	ZB4-BX2
25KEAK13BPN	P1S-D063MS-0070	DX2-651-B219	ZB4-BX2
25KEAK13BPNS_01	P1S-D063MS-0070	DX2-651-B219	ZB4-BX4
25KEAK17BPN	P1S-D063MS-0080	DX2-651-B619	ZB4-BX4
25KEAK17BPNS_01	P1S-D063MS-0080	DX2-651-B619	ZB4-BZ009
25KEAK21BPN	P1S-D063MS-0090	DX2-651-BL49	ZB4-BZ009
25KEAK21BPNS_01	P1S-D063MS-0090	DX2-651-BL49	ZB5-AA2
25KEAK21BPNS_02	P1S-D063MS-0100	DX2-651-BN	ZB5-AA2
25KEAW13BPN	P1S-D063MS-0100	DX2-651-BN	ZB5-AA3
25KEAW13BPNS_01	P1S-D063MS-0125	DX2-651-EX	ZB5-AA3
25KEAW17BPN	P1S-D063MS-0125	DX2-651-EX	ZB5-AA4
25KEAW17BPNS_01	P1S-D063MS-0135	DX2-656-70	ZB5-AA4
25KEAW21BPN	P1S-D063MS-0135	DX2-656-70	ZB5-AA9
25KEAW21BPNS_01	P1S-D063MS-0150	DX2-656-EX	ZB5-AA9
25KEIW13BPN	P1S-D063MS-0150	DX2-656-EX	ZB5-AD2
25KEIW13BPNS	P1S-D063MS-0160	DX2-661-961MB	ZB5-AD2
25KEIW13BPNS_01	P1S-D063MS-0160	DX2-661-961MB	ZB5-AD3
25KEIW13BVN	P1S-D063MS-0175	DX2-665-963MB	ZB5-AD3
25KEIW17BPN	P1S-D063MS-0175	DX2-665-963MB	ZB5-AD5
25KEIW17BPNS	P1S-D063MS-0200	DX2-R21-AN	ZB5-AD5
25KEIW17BPNS_01	P1S-D063MS-0200	DX2-R21-AN	ZB5-AL2
25KEIW21BPN	P1S-D063MS-0210	DX3-406-60	ZB5-AL2
25KEIW21BPNS	P1S-D063MS-0210	DX3-406-60	ZB5-AL3
25KEIW21BPNS_01	P1S-D063MS-0250	DX3-406-70	ZB5-AL3
25KETF06BPN	P1S-D063MS-0250	DX3-406-70	ZB5-AL4
25KETF06BPNS	P1S-D063MS-0300	DX3-406-EX	ZB5-AL4
25KETF06BPNS_05	P1S-D063MS-0300	DX3-406-EX	ZB5-AZ009

25KETF08BPN	P1S-D063MS-0320	DX3-411/3000880	ZB5-AZ009
25KETF08BPNS	P1S-D063MS-0320	DX3-411/3000880	ZB5-AZ905
25KETF09BPN	P1S-D063MS-0350	DX3-411-60	ZB5-AZ905
25KETF09BPNS	P1S-D063MS-0350	DX3-411-60	ZBE-101
25KETF10BPN	P1S-D063MS-0360	DX3-411-70	ZBE-101
25KETF13BPN	P1S-D063MS-0360	DX3-411-70	ZBE-102
25KETF13BPNS	P1S-D063MS-0400	DX3-411-EX	ZBE-102
25KFAD18BVN6	P1S-D063MS-0400	DX3-411-EX	ZBH02/01
25KFAD18MVN	P1S-D063MS-0450	DX3-416-60	ZBH02/02
25KFAD18SEN	P1S-D063MS-0450	DX3-416-60	ZBH02/03
25KFAD18SPN	P1S-D063MS-0500	DX3-416-70	ZBH02/04
25KFAD18SVN	P1S-D063MS-0500	DX3-416-70	ZBH04/01
25KFAK17MPN	P1S-D063MS-0550	DX3-416-EX	ZBH04/03
25KFAK17MPNS	P1S-D063MS-0550	DX3-416-EX	ZC2-JE01
25KFAK17SVN	P1S-D063MS-0600	DX3-421-60	ZC2-JE01
25KFAK21MPN	P1S-D063MS-0600	DX3-421-60	ZC2-JE09
25KFAK21SVN	P1S-D063MS-0650	DX3-421-70	ZC2-JE09
25KFAN13MPX	P1S-D063MS-0650	DX3-421-70	ZC2JE70
25KFAW13BPX0	P1S-D063MS-0750	DX3-421-EX	ZC2JE70
25KFAW13BPX3	P1S-D063MS-0750	DX3-421-EX	ZC2-JY13
25KFAW13BPX8	P1S-D063MS-0800	DX3-451/3000878	ZC2-JY13
25KFAW13EEX	P1S-D063MS-0800	DX3-451/3000878	ZC2-JY31
25KFAW13MPX	P1S-D063MS-0900	DX3-451-60	ZC2-JY31
25KFAW13MVN	P1S-D063MS-0900	DX3-451-60	ZC2-JY41
25KFAW17BPX0	P1S-D063MS-1000	DX3-451-EX	ZC2-JY41
25KFAW17BPX6	P1S-D063MS-1000	DX3-451-EX	ZC2JY51
25KFAW17BPX8	P1S-D063MS-1100	DX3-456-EX	ZC2JY51
25KFAW17MVN	P1S-D063MS-1100	DX3-456-EX	ZC2-JY71
25KFAW17SPN	P1S-D063MS-1200	DX3-606-70	ZC2-JY71
25KFAW21BPN6	P1S-D063MS-1200	DX3-606-70	ZC2-JY81
25KFAW21MPN	P1S-D063MS-1350	DX3-606-761M	ZC2-JY81
25KFAW21MVN	P1S-D063MS-1350	DX3-606-761M	ZC2-JY91
25KFIW13EEXS	P1S-D063MS-2000	DX3-606-7B	ZC2-JY91
25KFIW13EVX	P1S-D063MS-2000	DX3-606-7B	ZCKD05
25KFIW13MPN	P1S-D080MS-0050	DX3-606-961MA	ZCKD05
25KFIW13MVN	P1S-D080MS-0050	DX3-606-961MA	ZCKD21
25KFIW13SPN	P1S-D080MS-0100	DX3-606-BL49	ZCKD21
25KFIW13SVN	P1S-D080MS-0100	DX3-606-BL49	ZCKY31
25KFIW17EVX	P1S-D080MS-0120	DX3-606-BN	ZCKY31
25KFIW17MPN	P1S-D080MS-0120	DX3-606-BN	ZCKY41
25KFIW17MVN	P1S-D080MS-0125	DX3-606-EX	ZCKY41
25KFIW17RVX	P1S-D080MS-0125	DX3-606-EX	ZCK-Y54
25KFIW17SEC	P1S-D080MS-0150	DX3-611/3000885	ZCK-Y54
25KFIW17SPN	P1S-D080MS-0150	DX3-611/3000885	ZCK-Y55
25KFIW17SVN	P1S-D080MS-0200	DX3-611-70	ZCK-Y55
25KFIW21EEXS	P1S-D080MS-0200	DX3-611-70	ZCK-Y81
25KFIW21MPN	P1S-D080MS-0250	DX3-611-761M	ZCK-Y81
25KFIW21MVN	P1S-D080MS-0250	DX3-611-761M	ZCK-Y91
25KFIW21RVX	P1S-D080MS-0320	DX3-611-B219	ZCK-Y91
25KFIW21SVN	P1S-D080MS-0320	DX3-611-B219	ZD4-PA22
25KFTF06RVX	P1S-D080MS-0350	DX3-611-B619	ZD4-PA22
25KFTF08RVX	P1S-D080MS-0350	DX3-611-B619	ZDV-AB021S0D5
25KFTF09MPN	P1S-D080MS-0400	DX3-611-BL49	ZDV-B025S0D5

25KFTF10MPN	P1S-D080MS-0400	DX3-611-BL49	Z-E10A
25KFTF10MPX	P1S-D080MS-0500	DX3-611-BN	ZEB080NP01300DLB
25KFTF13MPN	P1S-D080MS-0500	DX3-611-BN	ZELW 12-1/2-SS
25KLAF11MPXS_01	P1S-D080MS-0750	DX3-611-EX	ZELW2 12-3/4-SS
25KLAK13BPN	P1S-D080MS-0750	DX3-611-EX	ZETA4
25KLAK17BPN	P1S-D080MS-0900	DX3-616/3000889	ZETA57-51-MO
25KLAK17BPNS	P1S-D080MS-0900	DX3-616/3000889	ZETA57-51-MO-E
25KLAK21BPN	P1S-D080MS-1000	DX3-616-70	ZETA57-83-MO-E
25KLAK21BVNS_02	P1S-D080MS-1000	DX3-616-70	ZETA6104
25KLAK21MPN	P1S-D100MS-0160	DX3-616-711JC	ZF5001
25KLAK21MVN	P1S-D100MS-0160	DX3-616-711JC	ZF5001
25KLAM16RVX	P1S-D100MS-0200	DX3-616-711MC	ZHBW2 12-1/2-SS
25KLAN13MPX	P1S-D100MS-0200	DX3-616-711MC	ZHBW2 16-1/2-SS
25KLAN13RVX	P1S-D100MS-0210	DX3-616-761M	ZHBW2 6-1/8-SS
25KLAW13EVX	P1S-D100MS-0210	DX3-616-761M	ZHBW2 6-3/8-SS
25KLAW13RVX	P1S-D125MS-0100	DX3-616-7B	ZHLW 12-1/2-SS
25KLAW17EVX	P1S-D125MS-0100	DX3-616-7B	ZHLW 12-3/4NB-SS
25KLAW17RVX	P1S-D125MS-0160	DX3-616-B619	ZHLW 12-3/4-SS
25KLAW21EVX	P1S-D125MS-0160	DX3-616-B619	ZHLW2 10-1/2-SS
25KLAW21RVX	P1S-D125MS-0180	DX3-616-BL49	ZHLW2 10-1/4-SS
25KLIM16BPN	P1S-D125MS-0180	DX3-616-BL49	ZHLW2 10-1-SS
25KLIM16RVX	P1S-D125MS-0250	DX3-616-BL53	ZHLW2 10-3/8-NNR
25KLIN13MPX	P1S-D125MS-0250	DX3-616-BL53	ZHLW2 10-3/8-SS
25KLIW13BEN	P1S-D125MS-0400	DX3-616-BN	ZHLW2 12-1/2-IIY
25KLIW13BPN	P1S-D125MS-0400	DX3-616-BN	ZHLW2 12-1/2-M
25KLIW13BVN	P1S-E100MF-0250	DX3-616-EX	ZHLW2 12-1/2-SS
25KLIW13EVX	P1S-E100MF-0250	DX3-616-EX	ZHLW2 12-1/4-M
25KLIW13MPN	P1S-E100MQ-0250	DX3-619-BL49	ZHLW2 12-1/4-SS
25KLIW13MVN	P1S-E100MQ-0250	DX3-619-BL49	ZHLW2 12-1-SS
25KLIW13RVX	P1S-E100MS-0150	DX3-621-70	ZHLW2 12-3/4-SS
25KLIW17BPN	P1S-E100MS-0150	DX3-621-70	ZHLW2 12-3/8-SS
25KLIW17BVN	P1S-E100MS-0200	DX3-621-761M	ZHLW2 14-3/8-SS
25KLIW17EVX	P1S-E100MS-0200	DX3-621-761M	ZHLW2 15-1/2-SS
25KLIW17MPN	P1S-E100MS-0250	DX3-621-763MS	ZHLW2 16-1/2-SS
25KLIW17MVN	P1S-E100MS-0250	DX3-621-763MS	ZHLW2 18-1/2-SS
25KLIW17RVX	P1S-E125MS-0125	DX3-621-7B	ZHLW2 18-3/4-SS
25KLIW21BPN	P1S-E125MS-0125	DX3-621-7B	ZHLW2 20-3/4-SS
25KLIW21EVX	P1S-F032MF-0050	DX3-621-961MA	ZHLW2 22-3/4-SS
25KLIW21MEN	P1S-F032MF-0050	DX3-621-961MA	ZHLW2 3-1/8-SS
25KLIW21RVX	P1S-F032MF-0630	DX3-621-B219	ZHLW2 4-1/8-SS
25KLKK08BPN	P1S-F032MF-0630	DX3-621-B219	ZHLW2 6-1/2-SS
25KLKK10BPN	P1S-F032MS-0080	DX3-621-B619	ZHLW2 6-1/4-IIY
25KLKK12BPN	P1S-F032MS-0080	DX3-621-B619	ZHLW2 6-1/4-SS
25KLKO08BPN	P1S-F040MS-0025	DX3-621-BL49	ZHLW2 6-1/8-SS
25KLKO10BPN	P1S-F040MS-0025	DX3-621-BL49	ZHLW2 6-3/8-SS
25KLKO10RVX	P1S-F040MS-0030	DX3-621-BL57	ZHLW2 8-1/2-SS
25KLTF06BPN	P1S-F040MS-0030	DX3-621-BL57	ZHLW2 8-1/4-0OR-SS
25KLTF08BPN	P1S-F040MS-0040	DX3-621-BN	ZHLW2 8-1/4-SS
25KLTF08EVX	P1S-F040MS-0040	DX3-621-BN	ZHLW2 8-1/8-SS
25KLTF08RVX	P1S-F040MS-0050	DX3-621-EX	ZHLW2 8-3/4-SS
25KLTF09BPN	P1S-F040MS-0050	DX3-621-EX	ZHLW2-16-1-SS
25KLTF09EVX	P1S-F040MS-0060	DX3-622-761M	ZM0041
25KLTF09RVX	P1S-F040MS-0060	DX3-622-761M	ZM0041

25KLTF10BEN	P1S-F040MS-0080	DX3-623-BN	ZM0048
25KLTF10BPN	P1S-F040MS-0080	DX3-623-BN	ZM0048
25KLTF10MVN	P1S-F040MS-0100	DX3-651/3000883	ZM0079
25KLTF13BPN	P1S-F040MS-0100	DX3-651/3000883	ZM0079
25KLTF13EVX	P1S-F040MS-0125	DX3-651-70	ZM13A
25KLTF13RVX	P1S-F040MS-0125	DX3-651-70	ZM13I
25KRAK13SPNS	P1S-F040MS-0200	DX3-651-761M	ZM17A
25KRAK17BPN	P1S-F040MS-0200	DX3-651-761M	ZM17I
25KSAK13BPN	P1S-F040MS-0400	DX3-651-BL49	ZM21A
25KSAK13BPX	P1S-F040MS-0400	DX3-651-BL49	ZM21I
25KSAK13SPN	P1S-F040MS-0660	DX3-651-BN	ZM5015
25KSAK13SPNS	P1S-F040MS-0660	DX3-651-BN	ZM5015
25KSAK17BPN	P1S-F050MF-0050	DX3-651-EX	ZNSAB02-5S0D5
25KSAK17BPX	P1S-F050MF-0050	DX3-651-EX	ZO17
25KSAK17SPN	P1S-F050MF-0080	DX3-656-70	ZO17N
25KSAK21BPN	P1S-F050MF-0080	DX3-656-70	ZO21
25KSAK21BPX	P1S-F050MS-0025	DX3-656-EX	ZO21N
25KSAK21SPN	P1S-F050MS-0025	DX3-656-EX	ZP0178
25KSAK21SPNS	P1S-F050MS-0030	DX3-661-961MB	ZP0178
25KSAW13BPN	P1S-F050MS-0030	DX3-661-961MB	ZP0185
25KSAW13SPNS	P1S-F050MS-0050	DX3A4	ZP0185
25KSAW17BPN	P1S-F050MS-0050	DX3A4	ZP0185
25KSAW21BPN	P1S-F050MS-0070	DX3-R21-60	ZP0185
25KSIW13BPN	P1S-F050MS-0070	DX3-R21-60	ZP0197
25KSIW13BPX	P1S-F050MS-0080	DZ-4A	ZP0197
25KSIW13BVN	P1S-F050MS-0080	E.IL.1115	ZP0363
25KSIW13SPN	P1S-F050MS-0100	E.IL.1157	ZP0363
25KSIW13SPNS	P1S-F050MS-0100	E.IL.1159	ZP0543
25KSIW17BPN	P1S-F050MS-0125	E/A8/4.4	ZP0543
25KSIW17BPX	P1S-F050MS-0125	E04/02VOLX	ZP07-PA/AP
25KSIW17SPN	P1S-F050MS-0140	E04/02X	ZP07-PB/A-3/8
25KSIW17SPNS	P1S-F050MS-0140	E04/2.5X	ZP07-YOS-BL-30MM
25KSIW21SPN	P1S-F050MS-0160	E05.5/04.32VOLX	ZP0805
25KSIW21SPNS	P1S-F050MS-0160	E05.5/04.32X	ZP0805
25KSTF06SPN	P1S-F050MS-0180	E0506/03X	ZP1320
25KSTF06SPNS	P1S-F050MS-0180	E0506/04X	ZP1320
25KSTF08BPN	P1S-F050MS-0230	E06/05X	ZP1324
25KSTF08BPX	P1S-F050MS-0230	E08.7/06.32VOLX	ZP1324
25KSTF08SPN	P1S-F050MS-0300	E08.7/06.32X	ZP16-10-XY
25KSTF09BPN	P1S-F050MS-0300	E08/04X	ZP1661
25KSTF09BPX	P1S-F050MS-0320	E08/05X	ZP1661
25KSTF09SPN	P1S-F050MS-0320	E0810/06X	ZP1810
25KSTF09SPNS_01	P1S-F050MS-0350	E10/08X	ZP1810
25KSTF10BPN	P1S-F050MS-0350	E107-12-060	ZP1905
25KSTF10SPN	P1S-F050MS-0420	E107-12-090	ZP1905
25KSTF10SPNS	P1S-F050MS-0420	E107-13-060	ZP1912
25KSTF13BPN	P1S-F050MS-0520	E107-13-090	ZP1912
25KSTF13SPN	P1S-F050MS-0520	E107A-12-090	ZP2039
25KSTF13SPNS	P1S-F063MS-0050	E12/08X	ZP2039
25SBAD14MPN	P1S-F063MS-0050	E12/09X	ZP2039
25SBAD14MPX	P1S-F063MS-0060	E1215/10X	ZP2039
25SBAD16MPN	P1S-F063MS-0060	E121F43	ZP2128
25SBAD16MPX	P1S-F063MS-0080	E121F43	ZP2128

25SBAD18MPN	P1S-F063MS-0080	E121F4302	ZP2163
25SBAD18MPX	P1S-F063MS-0090	E121F4302	ZP2163
25SBAK13MPN	P1S-F063MS-0090	E121F4302-2995-481865C2	ZP2179
25SBAK13MPX	P1S-F063MS-0200	E121F4302-2995-481865C2	ZP2179
25SBAK17MPX	P1S-F063MS-0200	E121F4302-N0-D100C2	ZP2189
25SBAK17MVN	P1S-F063MS-0280	E121F4302-N0-D100C2	ZP2189
25SBAK21MEN6	P1S-F063MS-0280	E121F43-2995-481865C2	ZP2190
25SBAK21MEN8	P1S-F063MS-0320	E121F43-2995-481865C2	ZP2190
25SBAK21MPN	P1S-F063MS-0320	E121F43-4270-486265C2	ZP2191
25SBAM16EVX	P1S-F063MS-0380	E121F43-4270-486265C2	ZP2191
25SBAM16RVX	P1S-F063MS-0380	E121F44	ZP25-MAB/DUESE
25SBAM18RVX	P1S-F080MQ-0095	E121F44	ZP2717
25SBAN13MPX	P1S-F080MQ-0095	E121F4406-2995-481865C2	ZP2717
25SBAN13RVX	P1S-F080MS-0050	E121F4406-2995-481865C2	ZP3067
25SBAN17MPN	P1S-F080MS-0050	E121F44-2995-4818653D	ZP3067
25SBAN17MPX	P1S-F080MS-0125	E121F44-2995-4818653D	ZP3834
25SBAN21MPX	P1S-F080MS-0125	E121F44-2995-482722P1	ZP3834
25SBAW10EVX	P1S-F080MS-0150	E121F44-2995-482722P1	ZP3848
25SBAW10MEN6	P1S-F080MS-0150	E121F44-4270-4810003D	ZP3848
25SBAW10MEN8	P1S-F080MS-0280	E121F44-4270-4810003D	ZP3986
25SBAW10MEX	P1S-F080MS-0280	E121F44-4270-4862650P	ZP3986
25SBAW10MPN	P1S-F080MS-0350	E121F44-4270-4862650P	ZP3987
25SBAW10MPNS	P1S-F080MS-0350	E121K03	ZP3987
25SBAW10MPX	P1S-F080MS-0400	E121K03	ZP3988
25SBAW10RVX	P1S-F080MS-0400	E121K0302	ZP3988
25SBAW13EVX	P1S-F100MS-0125	E121K0302	ZP4077
25SBAW13MEN	P1S-F100MS-0125	E121K0302-2995-4818653D	ZP4077
25SBAW13MENS	P1S-F100MS-0150	E121K0302-2995-4818653D	ZPV-4-06/OR
25SBAW13MEX	P1S-F100MS-0150	E121K0302-2995-481865A2	ZQ0030
25SBAW13MPD	P1S-F100MS-0200	E121K0302-2995-481865A2	ZQ0030
25SBAW13MPN	P1S-F100MS-0200	E121K0302-2995-481865C1	ZQ0035
25SBAW13MPN8	P1S-F100MS-0250	E121K0302-2995-481865C1	ZQ0035
25SBAW13MPNS	P1S-F100MS-0250	E121K0302-2995-481865C2	ZQ0060
25SBAW13MPX	P1S-F100MS-0300	E121K0302-2995-481865C2	ZQ0060
25SBAW13MVN	P1S-F100MS-0300	E121K0302-2995-482725C2	ZQ0535
25SBAW13MVX	P1S-F100MS-0350	E121K0302-2995-482725C2	ZQ0535
25SBAW13REXS	P1S-F100MS-0350	E121K0302-2995-4834664P	ZR12SX
25SBAW13RVX	P1S-F100MS-0450	E121K0302-2995-4834664P	ZR30SX
25SBAW17EEX	P1S-F100MS-0450	E121K0302-2995-483510S6	ZRDAZ02S0D5
25SBAW17EVX	P1S-F100MS-0550	E121K0302-2995-483510S6	ZRDBZ02S0D5
25SBAW17MEN	P1S-F100MS-0550	E121K0302-2995-495880C2	ZS0357
25SBAW17MEN6	P1S-F100MS-0600	E121K0302-2995-495880C2	ZS0357
25SBAW17MEN8	P1S-F100MS-0600	E121K0302-4270-4810003D	ZS0603
25SBAW17MPN	P1S-F125MS-0050	E121K0302-4270-4810003D	ZS0603
25SBAW17MPN6	P1S-F125MS-0050	E121K0302-492670C2	ZS0694
25SBAW17MPNS	P1S-F125MS-0165	E121K0302-492670C2	ZS0694
25SBAW17MPX	P1S-F125MS-0165	E121K0302-N0-D100C2	ZS1149
25SBAW17MPX0	P1S-F125MS-0450	E121K0302-N0-D100C2	ZS1149
25SBAW17MPX6	P1S-F125MS-0450	E121K03-2995-4818653D	ZS1149
25SBAW17MVN	P1S-K040MS-0160	E121K03-2995-4818653D	ZS1149
25SBAW17MVX	P1S-K040MS-0160	E121K03-2995-481865C2	ZS1171
25SBAW17RVX	P1S-L080MS-0200	E121K03-2995-481865C2	ZS1171
25SBAW17SVNS_01	P1S-L080MS-0200	E121K03-2995-482635S6	ZS1172

25SBAW21EEX	P1S-L080MS-0250	E121K03-2995-482635S6	ZS1172
25SBAW21EVX	P1S-L080MS-0250	E121K03-4270-486265C2	ZS1173
25SBAW21EVXS	P1S-L080MS-0800	E121K03-4270-486265C2	ZS1173
25SBAW21MEN	P1S-L080MS-0800	E121K03-4270-486265F4	ZS1175
25SBAW21MEN6	P1S-L080MS-1450	E121K03-4270-486265F4	ZS1175
25SBAW21MEN8	P1S-L080MS-1450	E121K03-492670C2	ZS22061B-G024-HB6
25SBAW21MPN	P1S-L100MQ-0300	E121K03-492670C2	ZSRA1PP0Z07
25SBAW21MPN0	P1S-L100MQ-0300	E121K03-495905C2	ZSRB1AA0Z07
25SBAW21MPN6	P1S-L100MQ-1400	E121K03-495905C2	ZUDB1AT2Z07B
25SBAW21MPN8	P1S-L100MQ-1400	E121K03-495905F4	ZUDB1AT2Z07E
25SBAW21MPNS_01	P1S-L100MS-0050	E121K03-495905F4	ZUDB1AT2Z07G
25SBAW21MPX	P1S-L100MS-0050	E121K0352	ZUDB1AT2Z07K
25SBAW21MVN	P1S-L125MS-0100	E121K0352	ZUDB1AT2Z07KXG001
25SBAW21MVX	P1S-L125MS-0100	E121K0352-2995-481865C1	ZUDB1AT61Z07B
25SBAW21RVX	P1S-L125MS-0150	E121K0352-2995-481865C1	ZUDB1AT61Z07E
25SBIM14MPN	P1S-L125MS-0150	E121K0352-2995-481865C2	ZUDB1AT61Z07G
25SBIM14MPX	P1S-S010DS-0010	E121K0352-2995-481865C2	ZUDB1AT61Z07K
25SBIM14RVX	P1S-S010DS-0010	E121K0352-4270-486265A7	ZUDB1AT9Z07E
25SBIM16MPN	P1S-S010DS-0025	E121K0352-4270-486265A7	ZUDB1PT2Z07B
25SBIM16MPX	P1S-S010DS-0025	E121K04	ZUDB1PT2Z07E
25SBIM16RVX	P1S-S010DS-0060	E121K04	ZUDB1PT2Z07G
25SBIM18MPN	P1S-S010DS-0060	E121K0402	ZUDB1PT2Z07K
25SBIM18MPN0	P1S-S010DS-0080	E121K0402	ZUDB1PT8Z07E
25SBIM18MPN3	P1S-S010DS-0080	E121K0402-2995-481865C2	ZUDB1PT9Z07E
25SBIM18MPN8	P1S-S010DS-0125	E121K0402-2995-481865C2	ZV5021
25SBIM18MPX	P1S-S010DS-0125	E121K0402-2995-481865C5	ZV5021
25SBIM18RVX	P1S-S010SS-0010	E121K0402-2995-481865C5	ZV5069
25SBIW10MPNS	P1S-S010SS-0010	E121K0402-483371C2	ZV5069
25SBIW10MPX	P1S-S012DS-0010	E121K0402-483371C2	ZV5090
25SBIW13EVX	P1S-S012DS-0010	E121K04-2995-4818653D	ZV5090
25SBIW13MEN	P1S-S012DS-0040	E121K04-2995-4818653D	ZV5091
25SBIW13MPN	P1S-S012DS-0040	E121K04-2995-481865A2	ZV5091
25SBIW13MPN0	P1S-S012DS-0100	E121K04-2995-481865A2	ZV5095
25SBIW13MPN3	P1S-S012DS-0100	E121K04-2995-481865C2	ZV5095
25SBIW13MPN6	P1S-S012SS-0010	E121K04-2995-481865C2	ZV7507
25SBIW13MPN8	P1S-S012SS-0010	E121K04-2995-481865K8	ZV7507
25SBIW13MPNS	P1S-S012SS-0020	E121K04-2995-481865K8	ZV7561
25SBIW13MPNS_01	P1S-S012SS-0020	E121K04-4270-4810003D	ZV7561
25SBIW13MPX	P1S-S012SS-0030	E121K04-4270-4810003D	ZYLS10X30.4401X
25SBIW13MPX0	P1S-S012SS-0030	E121K04-4270-481000C2	ZYLS10X30VZX
25SBIW13MPX3	P1S-S012SS-0050	E121K04-4270-481000C2	ZYLS10X35VZX
25SBIW13MPX6	P1S-S012SS-0050	E121K04-4270-486265A2	ZYLS10X40109X
25SBIW13MPX8	P1S-S012SS-0080	E121K04-4270-486265A2	ZYLS10X40VZX
25SBIW13MVN	P1S-S012SS-0080	E121K04-4270-486265C2	ZYLS10X45.4301X
25SBIW13MVN6	P1S-S016DS-0005	E121K04-4270-486265C2	ZYLS10X60109X
25SBIW13MVN8	P1S-S016DS-0005	E121K04-4270-488553P1	ZYLS10X70109X
25SBIW13MVX	P1S-S016DS-0015	E121K04-4270-488553P1	ZYLS10X70VZX
25SBIW13RKX	P1S-S016DS-0015	E121K04-M1J011C2	ZYLS12X120109X
25SBIW13RVX	P1S-S016DS-0025	E121K04-M1J011C2	ZYLS12X120VZX
25SBIW13SVNS	P1S-S016DS-0025	E121K07	ZYLS12X35.4401X
25SBIW17EEXS	P1S-S016DS-0040	E121K07	ZYLS12X35VZX
25SBIW17EVX	P1S-S016DS-0040	E121K07-2995-481865C2	ZYLS12X40129X
25SBIW17MEN	P1S-S016DS-0050	E121K07-2995-481865C2	ZYLS12X40VZX

25SBIW17MEX	P1S-S016DS-0050	E121K07-2995-483510S6	ZYLS12X45129X
25SBIW17MPN	P1S-S016DS-0100	E121K07-2995-483510S6	ZYLS12X45VZX
25SBIW17MPN3	P1S-S016DS-0100	E121K07-4270-486265A2	ZYLS12X50109X
25SBIW17MPX	P1S-S016DS-0160	E121K07-4270-486265A2	ZYLS12X80109X
25SBIW17MPX0	P1S-S016DS-0160	E121K23	ZYLS12X80VZX
25SBIW17MPX6	P1S-S016DS-0200	E121K23	ZYLS14X40X
25SBIW17MPX8	P1S-S016DS-0200	E121K23-2995-4818653D	ZYLS14X50.4401X
25SBIW17MPXS	P1S-S016SS-0015	E121K23-2995-4818653D	ZYLS14X50129X
25SBIW17MVN	P1S-S016SS-0015	E121K23-4270-4810003D	ZYLS14X50VZX
25SBIW17MVX	P1S-S016SS-0020	E121K23-4270-4810003D	ZYLS14X55129X
25SBIW17REXS	P1S-S016SS-0020	E121K23-4270-481000C2	ZYLS16X100109X
25SBIW17RVX	P1S-S016SS-0025	E121K23-4270-481000C2	ZYLS16X130109X
25SBIW21EEX	P1S-S016SS-0025	E121K23-4270-481044A7	ZYLS16X55.4401X
25SBIW21EVX	P1S-S016SS-0040	E121K23-4270-481044A7	ZYLS16X55129X
25SBIW21MEX	P1S-S016SS-0040	E121K23-4270-486265C2	ZYLS16X55VZX
25SBIW21MPN	P1S-S016SS-0050	E121K23-4270-486265C2	ZYLS16X60129X
25SBIW21MPX	P1S-S016SS-0050	E121K23-4833713D	ZYLS16X80109X
25SBIW21MPX6	P1S-S016TS-0015	E121K23-4833713D	ZYLS16X90VZX
25SBIW21MVN	P1S-S016TS-0015	E121K45	ZYLS20X100109X
25SBIW21MVX	P1S-S016TS-0025	E121K45	ZYLS20X120109X
25SBIW21REX	P1S-S016TS-0025	E121K4503	ZYLS20X70.4401X
25SBIW21RVX	P1S-S020DS-0015	E121K4503	ZYLS20X70109X
25SBKK06MPN	P1S-S020DS-0015	E121K4503-299503-491514Q3	ZYLS20X70129X
PLC051-30+A05	V14-160-IVC-HPE3A-N000-N-00-16	E121K4503-299503-491514Q3	ZYLS20X70VZX
PLC082-445-20+A13	VP1-095-RA-ZX-Z-000	E121K4503-2995-481865C2	ZYLS6X20VZX
PLC182-420-20+A11	VP1-095-LA-ZX-Z-000	E121K4503-2995-481865C2	ZYLS8X25.4401X
PLC182-420-20+A12	V14-160-SVS-EOH3N-N000-N-00-16	F12-110-RF-IV-K-000-000-0	ZYLS8X25VZX
PLC182-450-20+A12	V14-110-IVC-HPE3A-P300-N-40-11	F12-110-RS-SV-S-000-000-0	ZYLS8X30VZX
PLC182-480-20+A12	V14-160-IVC-ACI3N-N000-N-00-16	F12-110-RS-SV-T-000-000-0	F11-006-MB-CV-K-000-000-0
PLC182-420-20+A13	F12-080-MF-IV-D-000-000-P	F12-040-MS-SV-S-289-000-0	F11-019-QB-CV-K-000-MVL-P
PLC082-445-20+A14	F11-014-RF-IV-D-000-000-0	F12-030-MS-SV-S-289-000-0	F11-019-QB-CV-K-000-MVL-0
PLC051-130-18+A06	V14-110-SVS-HPE3A-N000-N-00-11	V12-060-MF-IV-D-000-D-0-060/02	F12-030-MF-IN-K-000-000-0
PLC051-143-18+A06	F12-090-MF-CV-C-000-000-0	F12-060-RF-IN-K-000-000-0	F11-010-HB-CV-K-357-000-0
PLC053-63-10 BANJO-CON.	F12-125-MF-IV-D-209-000-0	F12-080-MS-SV-S-000-L01-0	F11-012-HB-WV-K-000-000-0
PLC053-210-10 BANJO-CON.	F11-012-HB-SV-K-000-000-0	F12-060-MF-IV-K-275-000-0	F12-080-MS-SV-U-239-000-0
PLC051-54-12+A06	F12-110-MF-IV-K-000-000-P	F11-019-MB-CV-K-275-000-0	F12-060-MS-SV-S-289-000-0
PLC051-85-12+A06	V12-080-MA-IV-D-000-D-0-080/01	F12-030-MF-CV-K-000-000-P	F12-090-RF-IV-D-000-000-0
PLC051-100-16+A06	F12-090-MS-SV-U-000-000-0	F1-025-M_-__-_-000	F12-080-MS-SV-S-289-000-0
PLC051-150-12+A06	F12-125-RF-IV-D-000-000-0	F01-041-M_-__-_-000	V14-160-IVD-EPH3N-N000-N-00-16
PLC051-120-12+A06	F12-060-MU-IV-D-000-000-0	F01-051-M_-__-_-000	F11-012-HB-CV-K-357-MVR-0
PLC051-120-16+A06	F11-012-HF-IV-K-308-000-0	F12-040-MF-IN-X-277-000-0	F11-019-HB-CV-K-357-MVR-0
PLC051-130-16+A06	F11-019-IL-WS-K-000-000-1-012/	F01-061-M_-__-_-000	F12-030-MF-IV-K-357-MVR-0
PLC051-140-9+A06	F11-019-IR-WS-K-000-000-3-012/	F01-081-M_-__-_-000	F12-080-MF-IV-K-357-000-0
PLC051-150-16+A06	F11-019-MB-SV-T-000-000-0	F1-101-M_-__-_-000	F11-019-MU-SV-T-000-000-P
PLC182-210-20+A13	V12-060-TF-CV-C-000-D-P-055/01	V12-080-TS-SV-S-000-D-0-080/03	F12-090-LF-IV-D-000-000-0
PLC182-150-20+A13	F11-014-HF-IV-K-000-000-P	F12-030-MU-TV-S-000-000-0	V12-060-MA-IV-D-000-D-P-060/03
PLC182-150-20+A14	F11-012-RB-CV-K-000-000-0	F12-040-MU-TV-S-000-000-0	F11-012-LU-SV-S-000-000-0
PLC182-250-20+A14	V14-110-IVC-EOH3N-N000-N-00-11	F12-060-MU-TV-S-000-000-0	V14-110-IVD-AHI3A-L015-N-00-11
PLC182-330-20+A14	V14-160-IVC-AHE3A-N000-P-00-16	F11-019-LB-SV-T-000-000-0	V12-080-TS-SV-S-000-D-P-080/01
PLC182-380-20+A14	F12-080-MF-CV-C-000-000-P	F11-019-LB-CV-D-000-000-0	V12-060-MS-SV-S-000-D-P-060/02
PLC182-420-20+A14	F12-030-MS-TV-T-000-L01-0	F11-005-MB-CV-K-209-000-0	F12-040-MF-CN-X-264-000-0
PLC182-435-20+A14	V14-110-IVD-ADHXC-L017-N-52-11	F12-030-MF-IV-K-000-L01-P	F12-030-MF-IV-P-209-000-0
PLC182-445-20+A14	V14-160-IVD-AHE3A-N000-P-00-16	F12-030-RF-IV-P-000-000-0	F12-110-MF-IV-K-357-000-0

PLC082-200-20+A13	V14-160-SVS-EOH3N-L015-N-00-16	V12-080-MA-IV-D-000-D-0-080/01	F11-010-RB-CV-D-000-000-0
PLC082-435-20+A13	F11-014-HF-IV-D-000-000-P	F11-019-MB-CN-X-290	F11-019-SB-CS-K-000-MVR-B
PLC182-400-20+A12	F12-030-MF-IV-Z-000-000-P	F12-080-MF-CV-C-000-L01-0	F11-010-RB-SV-S-000-000-0
PLC182-250-5+A15	F11-014-HB-CV-K-000-000-P	F12-060-MF-IN-K-000-000-0	F12-030-MS-TV-T-000-L01-P
PLC182-275-5+A15	F12-090-MF-IV-K-000-000-P	F01-012-L_-__-_-000	F12-040-MF-IV-D-000-L01-P
PLC182-380-5+A15	F12-060-MF-IV-D-000-000-P	F1-012-R_-__-_-000	V12-080-MF-IV-D-000-D-0-080/04
PLC082-350-5+A15	F12-090-MF-CV-X-330-000-P	F11-010-LB-CV-D-000-000-0	F12-090-RU-SV-S-000-000-0
PLC082-380-5+A15	F12-125-MF-IV-D-000-000-P	F11-019-RU-SN-T-000	T12-080-MT-CV-D-000-A-0-080/02
PLC182-350-5+A15	V12-080-MS-SV-S-000-D-0-080/05	F12-040-MF-CV-C-000-L01-0	F12-040-MF-IN-X-379-000-0
PLC051-140-9+A06	F12-090-MS-SV-U-000-L01-0	V12-080-MA-IV-C-000-D-0-080/04	V12-080-MF-NV-C-000-D-0-080/03
PLC051-155-16+A08	V14-110-IVD-EOH3N-L015-N-00-11	F12-030-MS-TV-K-000-000-0	V14-160-IVC-AHE3A-N000-P-00-16
PLC082-480-20+A17	V12-060-MS-SV-S-000-D-0-060/02	F12-110-MS-SV-T-000-000-0	F12-090-MF-IV-K-000-L01-P
PLC082-400-5+A15	V12-080-MF-IV-D-000-D-0-080/02	F11-010-HU-CN-K-201	F12-125-RF-IV-D-000-000-P
PLC182-N +A14	F12-090-MF-IV-K-000-L01-0	F11-010-HB-CN-K-201	F12-060-RF-IV-D-000-000-P
PLC051-275-10+A229	F12-030-MF-IV-D-000-000-P	F11-010-QB-CV-K-000-000-0	F1-101-L_-__-_-506 HYVA
PLC182-200-5+A15	F11-012-RF-IV-D-000-000-0	F12-060-MF-CV-K-000-L01-0	V12-080-MF-NV-D-000-D-0-080/06
PLC182-260-5+A15	F12-125-RF-IV-K-000-000-0	F12-040-MF-CV-C-000-000-P	V14-110-SVS-EOH3N-N000-N-00-11
PLC082-150-20+A13	V14-160-IVC-AHI3A-L015-N-03-16	V12-060-MF-IV-D-000-D-0-060/02	F11-012-RB-SV-S-000-000-0
PLC082-250-20+A13	V14-110-IVD-AHI3A-L015-N-03-11	F12-040-MS-SV-S-000-L01-0	V14-110-IVD-ACI3D-N000-N-00-11
PLC082-300-20+A13	F12-125-MF-CV-X-326-000-P	F11-014-HB-CV-K-000-000-0	F11-010-QF-IV-K-000-000-0
PLC082-350-20+A13	F12-125-MS-SV-T-000-000-P	F12-040-MF-IV-K-000-L01-P	V12-060-TA-CV-C-000-D-0-060/03
PLC082-380-20+A13	V14-160-IVC-AHE3A-L015-P-00-16	V12-080-MU-SV-S-000-D-S-080/03	F11-010-SB-XS-K-283-MVR-0
PLC082-420-20+A13	F11-012-HF-IV-K-000-000-0	F12-060-MF-IV-K-000-000-P	V14-110-CVC-EPH3N-N000-N-00-11
PLC082-510-20+A17	F12-125-MF-CV-C-000-000-P	V14-160-SVS-EPH3N-L013-P-00-16	F11-019-QB-CV-K-209-000
F12-060-MS-SN-S-000-000-0	F12-090-RF-IV-K-000-000-0	V12-060-TA-CV-C-000-D-0-060/02	F12-250-QF-SV-F-000-000-P
F12-060-RF-IV-K-000-000-0	V14-110-IVD-AHE3A-N000-P-00-11	V14-160-IVD-HPE3A-L013-P-00-16	V12-080-MF-IV-D-000-D-0-080/02
F12-060-RS-SV-S-000-000-0	VP1-120-RA-ZX-Z	F12-040-MS-SV-S-000-000-P	F11-010-MF-IV-D-000-000-0
F12-060-RS-SV-T-000-000-0	VP1-120-LA-ZX-Z	VP1-120-RA-ZX-Z-000	F11-014-QU-SV-S-000-000-0
F12-060-MF-IV-D-239-000-0	F12-060-MF-IV-K-000-L01-P	F11-014-HB-CV-D-000-000-0	V14-160-SVS-AHE2A-N000-N-00-16
F12-060-RF-IV-D-000-000-0	F12-030-MS-SV-S-000-L01-P	F12-060-MS-SV-S-000-L01-P	F11-010-MF-IV-D-399-000-0
F12-060-MF-IV-Z-000-000-0	F12-040-MF-IV-D-000-000-P	F12-030-LU-TV-S-000-000-0	F11-019-QB-CV-K-000-000-P
F11-005-MB-CV-D-000-000-0	F11-005-HB-CV-K-000-000-0	F12-040-RF-IN-K-000-000-0	F11-014-QU-CV-K-000-000-0
F12-040-MS-TV-S-000-000-0	V12-060-MA-IV-D-000-D-P-060/03	F12-030-RF-IN-K-000-000-0	V14-160-IVC-AHI3D-L013-N-00-16
F12-040-MF-CV-C-248-000-0	F12-125-LF-IV-K-000-000-0	V12-080-MA-IV-D-000-D-0-080/02	F11-019-QB-CV-K-209-MVL-P
F12-060-XF-IV-K-251-000-0	F12-080-MS-XV-X-255-L01-0	V12-060-MF-CV-C-000-D-0-060/01	F11-019-MB-CV-D-000-000-0
VP1-045-RG-ZN-Z-000	F11-010-RB-SN-S-000-000-0	F11-005-RB-CX-S-305-000-0	F11-019-MB-SV-D-000-000-0
VP1-045-LG-ZN-Z-000 HYDR. PL	F12-090-MF-IV-D-000-000-P	F11-014-HU-SV-T-000-000-0	F11-019-LB-SN-S-000
VP1-075-RG-ZN-Z-000	V14-110-IVD-EOH3N-L015-N-00-11	F11-014-HU-SV-S-000-000-0	F11-019-HB-SV-S-000-000-0
VP1-075-LG-ZN-Z-000	V12-060-MF-IV-D-000-D-P-055/02	F11-014-HF-IV-K-000-000-0	V12-060-TA-IV-D-000-D-0-060/03
F12-030-MS-TN-S-000-000-0	V14-160-IVD-HPE3A-N000-N-00-16	F11-014-HF-IV-D-000-000-0	F11-006-MB-CV-K-101-000-0
F12-030-MS-TV-P-000-000-0	F11-012-HF-IV-K-000-000-P	F12-030-MS-SV-D-000-000-0	F11-010-RB-CV-K-000-000-0
V12-080-MA-CV-D-000-D-0-080/0	V12-060-MA-IV-C-000-D-0-060/01	F12-040-MF-IV-Z-000-L07-0	F11-019-RB-CV-K-000-000-0
F11-010-JB-CV-K-000-000-0	V14-160-SVS-ACI3A-L015-N-00-16	F12-040-LF-IV-K-000-000-0	F11-010-HB-CV-K-000-000-0
V12-080-MF-IV-C-000-D-0-080/05	F11-012-HB-IV-K-000-000-P	F12-080-LF-IV-K-000-000-0	F11-010-MB-CN-K-209
F12-060-MF-IN-Z-000-000-0	V14-110-SVS-EOH3N-N000-N-00-10	F12-110-MF-IV-D-000-000-P	V12-060-MA-IV-D-000-D-0-060/02
F12-080-LF-IV-D-000-000-0	V14-110-IVC-AHE3A-N000-P-00-11	V14-110-IVC-EPH3N-N000-N-00-11	T12-060-MT-CV-C-101-A-0-060/03
F12-080-LS-SV-S-000-000-0	F11-010-MU-SV-S-000-000-0	F12-110-MF-IV-K-507-L01-0	F11-005-RB-CV-D-000-000-0
F12-080-MF-CV-C-000-000-0	F11-012-HB-CV-K-000-000-P	VP1-045-RG-ZN-Z-103	F11-005-LB-CV-D-000-000-0
F12-080-MF-IV-D-000-L01-0	F11-010-RB-IV-K-000-000-0	F1-025-RB-__-_-000	T12-060-MT-CV-C-000-A-0-060/02
F12-080-MF-IV-D-000-000-0	F12-080-MF-IV-K-000-L01-P	F1-025-LB-__-_-000	V12-060-MA-CV-C-000-D-0-060/02
F12-080-MF-IV-K-000-L01-0	F12-250-QF-SV-F-000-000-0	F1-041-RB-__-_-000	T12-080-MT-CV-D-101-A-0-080/
F12-080-MF-IV-K-000-000-0	F12-250-QF-SV-K-000-000-0	F1-041-LB-__-_-000	T12-060-MT-CV-C-000-A-0-060/03
F12-080-MF-IV-Z-000-000-0	F12-250-QF-SV-S-000-000-0	F1-051-RB-__-_-000	F1-080-L - - -000

F12-080-MS-SV-S-000-000-0
F12-080-MS-SV-T-000-000-0
F12-080-MS-SV-U-000-000-0
F12-080-MS-SN-S-000-000-0
F12-080-MS-XV-X-255-000-0
F12-080-MS-SV-U-000-L01-0
F12-080-RF-IV-D-000-000-0
F12-080-RF-IV-K-000-000-0
F12-080-RS-SV-S-000-000-0
F12-080-RS-SV-T-000-000-0
F12-080-RS-SV-U-000-000-0
F12-080-MF-IV-K-000-000-P
F12-040-LS-TV-S-000-000-0
F1-025-R_-__-_-000
F01-025-L_-__-_-000
F12-040-MF-CV-X-264-000-0
F1-041-R_-__-_-000
F01-041-L_-__-_-000
F01-051-R_-__-_-000
F01-051-L_-__-_-000
F11-019-SB-CS-K-000-000-0
F1-061-R_-__-_-000
F01-061-L_-__-_-000
F01-081-R
F01-081-L_-__-_-000
F01-101-R_-__-_-000
F1-101-L- - -000
F12-080-MF-CV-K-000-000-0
F12-030-MU-TV-T-000-000-0
F12-040-MF-IN-X-264-000-0
F12-060-MF-CV-C-513-000-0
F11-019-LB-CN-K-209
F11-010-LB-CN-D-000
T12-080-MT-CV-D-000-A-0-080/0
F12-060-MU-TV-T-000-000-0
F11-010-SB-CS-K-270-000-0
F11-019-SB-CS-K-270-000-0
T12-060-MT-CV-C-000-A-060/032
F11-019-RU-SV-T-000-000-0
F12-040-MU-TV-T-000-000-0
F12-030-RS-TV-S-000-000-0
F1-025-LU-SV-S-000
F1-041-RU-SV-S-000
F1-041-LU-SV-S-000
F1-051-RU-SV-S-000
F02-053-53-R - -000
F1-061-RU-SV-S-000
F02-070-35-R- -000
F02-070-35-L- -000
F11-019-LU-SN-T-000
F12-110-LF-IV-D-000-000-0
F12-110-LF-IV-K-000-000-0
F12-110-LF-IN-K-000-000-0

F12-250-RF-SV-K-000-000-0
V14-160-IVD-EOH3N-N000-N-00-16
F11-012-RF-IV-K-000-000-0
F12-090-LF-IV-K-275-000-0
F11-019-IR-WS-K-000-000-1-012/
F12-080-MS-SN-U-209-000-0
V12-080-TS-SV-S-000-D-0-080/01
F12-040-XF-IV-K-291-000-0
V14-160-IVC-AHE3A-N000-P-00-16
F11-005-JB-CV-K-000-000-0
F11-014-HB-IV-D-000-000-P
F12-125-MF-IV-K-209-000-P
T12-080-MT-CV-D-000-A-0-080/02
V14-160-SVS-AHI3C-L013-N-00-16
F12-080-MF-IV-D-346-000-0
F11-019-LB-CV-K-000-000-0
V14-160-SVS-AHI3C-L015-N-00-16
F12-060-MS-SV-S-000-000-P
F12-150-RF-CV-K-000-000-0
F12-090-MF-IV-K-209-L01-P
F12-150-MF-CV-K-275-000-0
F12-150-MF-CV-K-000-000-0
F12-150-HF-CV-K-000-000-0
F12-150-MF-SV-S-000-000-0
F12-150-HF-SV-S-000-000-0
F12-150-HF-SV-T-000-000-0
F12-150-LF-SV-T-000-000-0
F12-150-MF-CN-K-000-000-0
F12-150-MF-CV-D-000-000-0
F12-150-MF-SV-T-000-000-0
F11-019-SB-CS-K-000-MVR-0
F12-030-MF-IV-K-000-L06-P
F12-090-MF-IV-K-357-000-0
F12-030-MF-IV-K-357-000-0
F11-019-HB-CV-K-357-000-0
F11-012-HB-CV-K-357-000-0
F11-019-MB-CV-K-000-000-P
F12-090-LF-IV-K-357-000-0
V14-110-IVD-EOH3N-P400-N-00-11
F12-150-LF-CV-K-357-000-0
F11-019-SB-CS-K-201-MVL-0
F12-150-MF-CV-K-357-000-0
F12-060-MF-IV-K-357-000-0
F11-019-SB-CS-K-000-MVL-0
F12-150-LF-CV-K-000-000-0
F11-014-HB-SV-T-000-MVL-0
F11-014-HB-WV-K-000-MVL-0
F11-010-SB-CS-K-000-MVR-0
F11-010-SB-WS-K-000-MVL-0
F11-010-SB-XS-K-283-MVL-0
F11-010-SB-CS-K-349-MVR-0
F11-010-SB-WS-K-000-MVR-0
F11-010-SB-XS-K-285-MVR-0

F1-051-LB-__-_-000
F1-061-RB-__-_-000
F1-061-LB-__-_-000
F1-081-RB-__-_-000
F1-081-LB-__-_-000
F1-101-RB-__-_-000
F1-101-LB-__-_-000
F1-121-M_-__-_-000
VP1-130-RA-ZX-Z-000
VP1-130-LA-ZX-Z-000
VP1-130-RA-ZX-Z-102
F11-014-LU-SV-S-000-000-0
V14-160-IVD-ACI3A-N000-N-00-16
F11-019-RB-SN-T-000
F12-040-MF-IV-K-000-000-P
V14-110-SVS-HPE3A-L013-N-40-11
F12-030-MF-IV-K-000-000-P
V14-160-SVS-EPH3N-N000-N-00-16
V14-110-IVC-EPH3N-N000-N-00-11
V12-060-MF-IV-D-000-D-S-060/02
V14-160-IVD-HPE3A-N000-N-40-16
V14-160-IVC-EOH3N-N000-N-00-16
V12-080-MF-IV-D-000-D-S-074/02
F11-010-HU-SV-S-000-000-0
V14-110-IVD-EOH3N-N000-N-00-11
F11-012-HB-CV-K-000-000-0
V14-110-IVD-EPH3N-L013-N-00-11
V14-160-IVC-EOH3N-L020-P-00-16
V14-110-IVD-HOE3N-N000-N-00-11
V12-060-MS-SV-S-000-D-0-060/02
F11-014-LB-CV-K-000-000-0
V14-160-IVD-HPE3A-N000-N-40-16
V12-080-TU-SV-S-000-D-P-080/01
F11-019-MB-SN-T-000
F12-030-MS-TV-S-000-L01-0
F12-060-MS-TV-S-000-L01-0
F12-125-MS-SV-S-000-000-0
F12-040-MU-SV-T-000-000-0
F11-010-MB-CV-K-312-000-0
F12-090-MF-IV-D-000-000-0
V14-110-IVD-EPH3N-L013-N-00-11
F11-019-MB-CV-K-220-000-0
F12-030-MF-IV-P-317-000-0
F11-010-LB-CV-K-000-000-0
F11-012-HU-SV-S-000-000-0
F11-014-RF-IV-K-000-000-0
F11-014-RB-CV-K-000-000-0
F12-090-MS-SV-T-000-000-0
F12-090-MF-IV-K-000-000-0
F12-110-MF-CV-C-000-000-P
F11-019-HU-SV-T-000-000-P
F11-010-MB-IV-K-000-000-0
F12-125-MF-IV-K-000-000-P

V12-080-TA-IV-D-000-D-0-080/01
V12-060-MF-CV-C-000-D-0-060/01
T12-080-MT-CV-D-000-A-0-080/05
F11-010-SB-CS-K-000-000-0
V12-060-TA-IV-C-000-D-0-060/02
T12-060-MT-CV-C-000-A-0-060/03
V12-060-MA-CV-C-000-D-0-060/01
V12-060-MF-CV-C-000-D-0-060/01
F11-019-MB-CV-K-201-000-0
F11-019-HB-SV-S-260
F11-019-SB-WS-K-224-000-0
T12-060-MT-CV-C-000-A-0-060/02
F11-010-RB-CN-D-000
V12-080-MS-SV-S-000-D-0-080/01
F11-019-MB-CV-K-209-000-0
F11-010-MB-CV-K-209-000-0
V12-060-TF-CV-C-000-D-0-060/01
F11-005-LB-CV-K-000-000-0
T12-060-MT-CV-C-000-A-0-060/02
F12-040-MF-IV-D-000-L01-0
F12-040-MF-IV-K-000-L01-0
F12-040-LS-SV-S-000-000-0
F12-040-MF-CV-C-000-000-0
F12-040-MF-IV-D-000-000-0
F12-040-MF-IV-K-000-000-0
F12-040-MF-IV-Z-000-000-0
F12-040-MF-IN-K-000-000-0
F12-040-MS-SV-S-000-000-0
F12-040-MS-SV-T-000-000-0
F12-040-MS-SN-S-000-000-0
F12-040-RF-IV-K-000-000-0
F12-040-RS-SV-S-000-000-0
F12-040-MF-IV-D-239-000-0
F12-030-MS-TV-S-000-000-0
F12-060-MS-TV-S-000-000-0
V12-060-MA-IV-C-000-D-0-060/01
F12-030-MS-TV-T-000-000-0
F12-030-MF-CV-C-235-L01-P
F12-030-LF-IV-K-000-000-0
F12-030-LS-SV-S-000-000-0
F12-030-MF-CV-C-235-000-P
F12-030-MF-IV-D-000-000-0
F12-030-MF-IV-K-000-000-0
F12-030-MF-IV-P-000-000-0
F12-030-MF-IV-Z-000-000-0
F12-030-MS-SV-T-000-000-0
F12-030-MS-SV-S-000-000-0
F12-030-RF-IV-D-000-000-0
F12-030-RF-IV-K-000-000-0
F12-030-RS-SV-S-000-000-0
F12-030-MF-IV-Z-236-000-0
F12-030-MF-CN-C-235-000-P
F12-040-MS-TV-T-000-000-0

F12-110-LS-SV-T-000-000-0
F12-110-LS-SV-S-000-000-0
F12-110-MF-IV-D-000-000-0
F12-110-MF-IV-D-501-000-0
F12-110-MF-IV-K-000-000-0
F12-110-MF-IN-D-000-000-0
F12-110-MS-SV-S-000-000-0
F12-110-MS-SN-S-000-000-0
F12-110-RF-IV-D-000-000-0

F11-019-SB-XS-K-284-MVL-0
F11-019-SB-SS-S-000-MVR-0
F11-019-SB-XS-K-286-MVR-0
F11-019-SB-XS-K-298-MVR-P
F12-030-MF-IV-K-000-MVR-0
V14-160-IVC-EPH3N-N000-P-15-16
V14-110-IVC-EPH3N-N000-P-15-11
F11-010-MU-SV-K-000-000-0
V14-160-IVC-AHEXB-L015-P-01-16

F12-110-MF-IV-Z-000-000-0
V12-060-MF-IV-D-000-D-P-050/02
V14-160-IVC-AHI3C-N000-N-00-16
V12-080-MA-IV-C-000-D-S-080/04
F11-019-RB-SV-S-000-000-0
V14-110-IVD-HPE3B-N000-N-00-11
F11-014-RU-SV-S-000-000-0
F12-125-MF-IV-K-000-000-0
F12-125-MF-IV-D-000-000-0
V14-110-IVD-AHI3C-N000-N-00-11
V14-160-IVC-EOH3N-N000-N-00-16
V14-160-IVD-HPE3A-R300-N-40-16

F12-060-MS-TV-T-000-000-0
V12-080-TA-CV-D-000-D-0-080/04
F12-060-MF-IV-K-000-L01-0
F12-060-MF-IV-D-000-L01-0
F12-060-MS-SV-S-000-L01-0
F12-060-LF-IV-D-000-000-0
F12-060-LF-IV-K-000-000-0
F12-060-LS-SV-T-000-000-0
F12-060-MF-CV-K-000-000-0
F12-060-MF-CV-C-000-000-0
F12-060-MF-IV-D-000-000-0
F12-060-MF-IV-K-000-000-0
F12-060-MS-SV-S-000-000-0
F12-060-MS-SV-T-000-000-0